DEPARTMENT OF PUBLIC WORKS

ENGINEERING DIVISION

PROPOSED BRIDGE REPAIR OF
CRANEHILL DRIVE OVER IVY CREEK

GENERAL CONSTRUCTION NOTE:

THIS PROJECT SHALL BE CONSTRUCTED IN ACCORDANCE WITH VDOT ROAD AND BRIDGE SPECIFICATIONS DATED JAN., 2002, VDOT ROAD AND BRIDGE STANDARDS, 2001, CITY OF LYNCHBURG GENERAL SPECIFICATIONS & STANDARD DRAWINGS (NINETEENTH PRINTING), 1978, VIRGINIA WORK AREA PROTECTION MANUAL DATED JAN., 2003 AND AS AMENDED BY THE SUPPLEMENTAL SPECIFICATIONS & CONTRACT DOCUMENTS FOR THIS PROJECT AND THESE DRAWINGS.

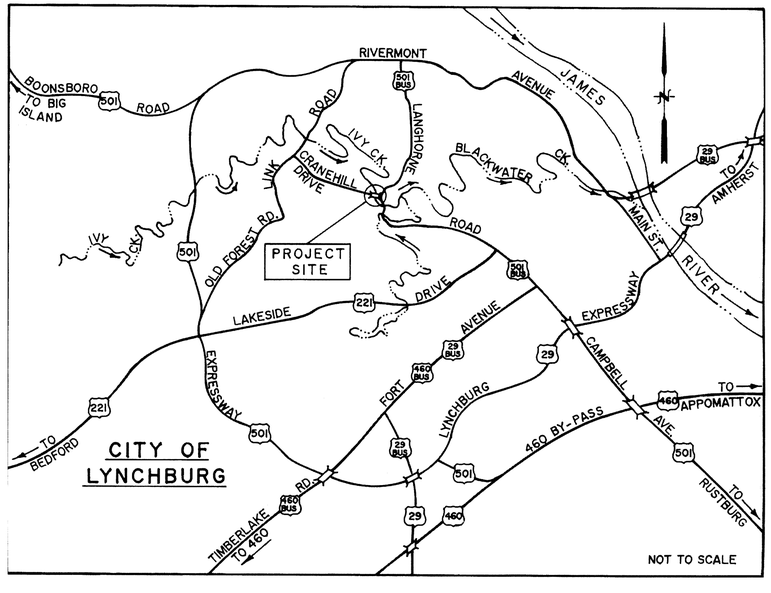

LOCATION MAP
NOT TO SCALE

STRUCTURE #8010 – CRANEHILL DRIVE OVER IVY CREEK

CONVENTIONAL SYMBOLS

	PROPOSED	EXISTING
WATER		
VALVE AND BOX	WV	WV
HYDRANT	FH	FH
ANCHOR BLOCK		
WATER LINE	W	W
WATER METER	WM	WM
SEWER		
MANHOLE	MH	MH
LAMPSTACK	LS	LS
SANITARY SEWER	SS	SS
STORM SEWER	SD	SD
INLET OR CATCH BASIN		

RIGHT OF WAY	R/W
RAILROAD	
FENCE	
UNDERGROUND ELECTRICAL LINE	E
UNDERGROUND TELEPHONE LINE	T
GAS LINE	G
CULVERT	
POWER POLE	
TELEPHONE OR TELEGRAPH POLE	
PROPERTY CORNER	
PROPERTY LINE	P.L.
STREAM	

CADD REFERENCE NO. 03026COVER

COMM. NO.: 03026

PLANS REVISED	
SHEET NO.	DATE

COMMONWEALTH OF VIRGINIA
R. W. SCHWARTZ
No. 4291
PROFESSIONAL ENGINEER
1-20-04

PROJECT NO.: 02021-B
DATE: January 20, 2004
SHEET 1 OF 30

APPROVED	
1/20/04	DIRECTOR OF ENGINEERING
APPROVED	
20 JAN 04	CONSTRUCTION ENGINEER

COMMONWEALTH OF VIRGINIA
WILLIAM T. WILSON
No. 13039
PROFESSIONAL ENGINEER

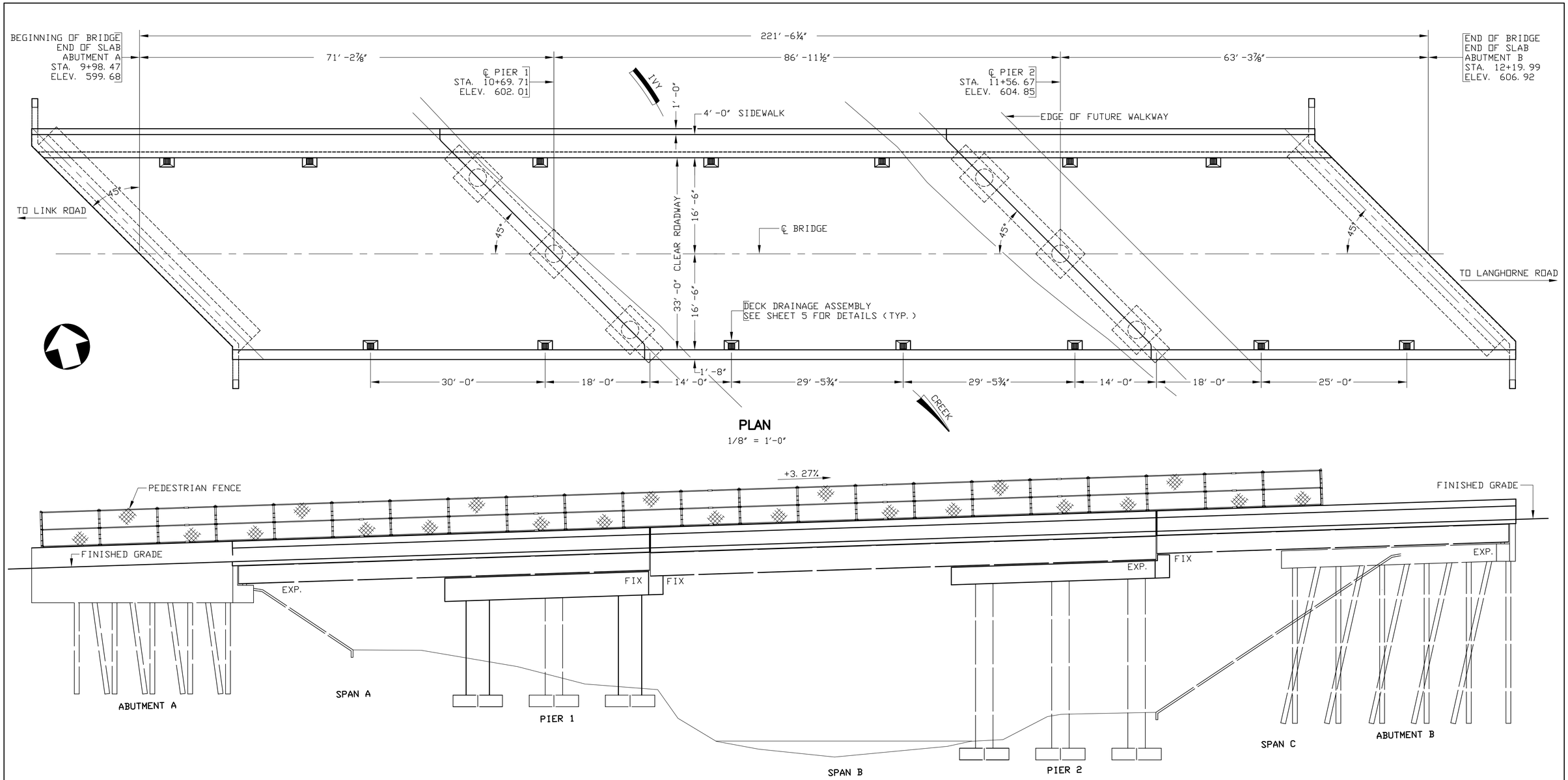

EXISTING OBJECT LINES
PROPOSED OBJECT LINES
EXISTING REINF. STEEL
PROPOSED REINF. STEEL
CUTTING PLANE LINE
CENTER LINE
HIDDEN LINES

CRANEHILL DRIVE OVER IVY CREEK
PLAN & ELEVATION

COMMONWEALTH OF VIRGINIA
JAMES F. GRIZZLE, JR.
No. 35295
1-22-04
PROFESSIONAL ENGINEER

SCHWARTZ & ASSOCIATES, INC.
CONSULTING ENGINEERS
7331 TIMBERLAKE ROAD
LYNCHBURG, VA.

THE CITY OF LYNCHBURG, VIRGINIA
DEPT. OF PUBLIC WORKS
ENGINEERING

DESIGNED BY: JFG	DRAWN BY: JFG	CHECKED BY: RWS
SCALE: 1/8" = 1'-0"	PROJECT NO.: 02021-B	
COMM. NO. 03026	DATE: JANUARY 20, 2004	SHEET 2 OF 30

CADD REFERENCE NO. 02029.DWG

GENERAL NOTE:

WIDTHS: 4'–0" SIDEWALK, 33'–0" ROADWAY.

SPAN LAYOUT: 71'–2⅞" ROLLED BEAM, 86'–11½" PLATE GIRDER AND 63'–3⅞" ROLLED BEAM.

CAPACITY: HS20 – LOADING AND ALTERNATE MILITARY LOADING.

SPECIFICATIONS:

CONSTRUCTION: VIRGINIA DEPARTMENT OF TRANSPORTATION ROAD AND BRIDGE SPECIFICATIONS, 2002.

DESIGN: AASHTO STANDARD SPECIFICATIONS FOR HIGHWAY BRIDGES, 1996, 1997 AND 1998 INTERIM SPECIFICATIONS, AND VDOT MODIFICATIONS.

STANDARDS: VIRGINIA DEPARTMENT OF TRANSPORTATION ROAD & BRIDGE STANDARDS, 2001.

I. GENERAL:

THESE PLANS ARE INCOMPLETE UNLESS ACCOMPANIED BY THE SUPPLEMENTAL SPECIFICATIONS AND SPECIAL PROVISIONS INCLUDED IN THE CONTRACT DOCUMENTS.

THIS PROJECT IS TO BE CONSTRUCTED IN ACCORDANCE WITH THE VIRGINIA DEPARTMENT OF TRANSPORTATION WORK AREA PROTECTION MANUAL, JANUARY 2003.

DESIGN LOADING INCLUDES 8 P.S.F. ALLOWANCE FOR CONSTRUCTION TOLERANCES AND CONSTRUCTION METHODS.

DETAILS OF EXISTING STRUCTURE ARE SHOWN ON PLANS ON FILE AT THE CITY ENGINEER'S OFFICE (STRUCTURE NO. 8010).

THE USE OF PRESTRESSED DECK PANELS AS STAY–IN–PLACE FORMS WILL NOT BE PERMITTED. STAY–IN–PLACE METAL DECK FORMS MAY BE USED PROVIDED THE VALLEY'S ARE STYROFOAM FILLED TO THE SATISFACTION OF THE ENGINEER.

THE CONTRACTOR SHALL PROVIDE ENGINEER SAFE ACCESS TO ALL AREAS OF WORK THROUGHOUT COURSE OF RECONSTRUCTION AND FOR FINAL INSPECTION AFTER WORK IS COMPLETE.

CONTRACTOR SHALL TAKE EXTREME CAUTION IN HIS OPERATIONS SO THAT NO DAMAGE IS DONE TO UTILITIES IN THE VICINITY OF BRIDGE OR ON THE BRIDGE.

THE CONTRACTOR SHALL VERIFY, IN FIELD ALL DIMENSIONS, SKEW AND ELEVATIONS BEFORE BEGINNING CONSTRUCTION AND BEFORE SUBMITTING SHOP DRAWINGS.

ALL COSTS RELATED TO STRUCTURE EXCAVATION AND PLACING WASTE CONCRETE UNDER DECK DRAINS SHALL BE INCLUDED IN PRICE BID FOR "REMOVE PORTION OF EXISTING STRUCTURE."

II. TRAFFIC CONTROL:

ALL NEW CONCRETE SHALL HAVE OBTAINED FULL DESIGN STRENGTH BEFORE ALLOWING TRAFFIC ON NEW PORTION OF STRUCTURE.

BRIDGE SHALL BE CONSTRUCTED IN TWO STAGES AND SHALL BE OPEN TO SIGNALIZED TRAFFIC AT ALL TIMES.

III. CONCRETE

CONCRETE IN SUPERSTRUCTURE, INCLUDING RAILING, TERMINAL WALLS, AND SIDEWALK SHALL BE CLASS A4. CONCRETE IN SUBSTRUCTURE SHALL BE CLASS A4 WITH NO. 7 AGGREGATE.

COST OF ADHESIVE ANCHORS SHALL BE INCLUDED IN UNIT PRICE BID FOR EPOXY COATED REINFORCING STEEL.

ALL EXISTING CONCRETE REMOVED SHALL BE REMOVED TO HORIZONTAL AND VERTICAL PLANES ONLY AND TO SOUND CONCRETE.

EDGES OF AREAS TO BE REPAIRED SHALL BE SAW CUT TO A DEPTH OF 3/4" OR TO A DEPTH THAT WILL JUST CLEAR THE REINFORCING STEEL. NO FEATHER EDGES WILL BE PERMITTED BETWEEN THE NEW AND OLD CONCRETE.

1. BLASTING – GENERAL

ALL CONCRETE AREAS BLASTED SHALL BE BLASTED FOR A TIME SUFFICIENT TO EXPOSE SOUND CONCRETE AND COARSE AGGREGATE, UNLESS OTHERWISE NOTED. THEY SHALL BE BLASTED USING AN ABRASIVE MATERIAL OR A MIXTURE OF WATER (8,000 PSI MIN.) AND ABRASIVE.

ALL REINFORCING STEEL AREAS BLASTED SHALL BE BLASTED UNTIL ALL CONCRETE, RUST, SCALE, CORRODED STEEL MATERIAL AND FOREIGN MATERIAL ARE REMOVED TO CLEAN WHITE METAL.

2. BLASTING – FOR BONDING EPOXY

BLASTING, PRIOR TO APPLICATION OF BONDING EPOXY, SHALL BE TO A MEDIUM FINISH THAT IS ONE SUFFICIENT TO GENERALLY EXPOSE COARSE AGGREGATE WITH SLIGHT REVEAL – MAXIMUM REVEAL 1/4 INCH.

CONTRACTOR SHALL EXERCISE EXTREME CAUTION WHEN REMOVING EXISTING CONCRETE SO THAT NONE OF THE PORTION OF THE STRUCTURE OR REINFORCING STEEL TO REMAIN IN PLACE IS DAMAGED. ALL EXISTING CONCRETE THAT IS REMOVED IN SUBSTRUCTURE SHALL BE REMOVED WITH PNEUMATIC HAMMER (MAXIMUM WEIGHT 35 LBS.) EXCEPT 15 LB. MAXIMUM WEIGHT HAMMER FOR DOING FINAL TRIM WORK.

IV. REINFORCING STEEL:

DEFORMED REINFORCING BARS SHALL CONFORM TO ASTM A615, GRADE 60. ALL REINFORCING BAR DIMENSIONS ON THE DETAILED DRAWINGS ARE TO CENTERS OF BARS EXCEPT WHERE OTHERWISE NOTED AND ARE SUBJECT TO FABRICATION AND CONSTRUCTION TOLERANCES.

WHEN DRILLING FOR ADHESIVE ANCHORS, EXTREME CAUTION SHALL BE TAKEN IN ORDER THAT EXISTING REINFORCING STEEL IS NOT DAMAGED. ANY REINFORCING STEEL DAMAGED SHALL BE CORRECTED AT THE CONTRACTOR'S EXPENSE.

GREAT CARE SHALL BE TAKEN DURING THE REMOVAL OF CONCRETE IN THE SUBSTRUCTURE IN ORDER THAT THE EXISTING REINFORCING STEEL TO BE RE–USED IS NOT DAMAGED.

ANY EXISTING REINFORCING STEEL THAT IS TO REMAIN IN STRUCTURE AND IS DAMAGED IN SUBSTRUCTURE REMODELING, AS DETERMINED BY THE ENGINEER, SHALL BE CORRECTED AT THE CONTRACTOR'S EXPENSE.

ALL EXPOSED REINFORCING STEEL IN CONCRETE REMODELING AREAS SHALL BE BLASTED AND COVERED WITH BONDING EPOXY IMMEDIATELY PRIOR TO RECASTING CONCRETE.

V. EPOXIES:

ALL NEW CONCRETE CAST IN SUBSTRUCTURE SHALL BE BONDED TO EXISTING CONCRETE WITH BONDING EPOXY. BONDING EPOXY USED ON SUBSTRUCTURE SHALL BE SIKA ARMATEC 110 (OR APPROVED EQUIVALENT) UNLESS OTHERWISE NOTED ON PLANS.

ALL COSTS RELATED TO BONDING CONSTRUCTION JOINTS, AS SHOWN ON THESE CONTRACT DRAWINGS, SHALL BE INCLUDED IN COST BID FOR CLASS A4 CONCRETE.

VI. STRUCTURAL STEEL:

FINISH PAINT SHALL BE GREEN, 595–24449. USE SYSTEM A FOR "PREPARE & OVERCOAT EXISTING STRUCTURE" & SYSTEM B FOR "RECOAT EXISTING STRUCTURE."

REGARDLESS OF THE RELATIVE HUMIDITY UNDER THE BRIDGE DECK, THE CONTRACTOR WILL NOT BE PERMITTED TO APPLY PAINT TO STRUCTURAL STEEL WHEN THERE IS CONDENSATION ON THE STRUCTURAL STEEL OR WHEN IT IS RAINING.

ALL FIELD CONNECTIONS SHALL BE MADE WITH 7/8" DIA. A325 H.S.T.C. BOLTS, NUTS AND WASHERS.

TOP FLANGE AND WEBS OF BEAMS SHALL BE TRIMMED AT EXPANSION JOINTS AS NECESSARY TO PREVENT FLANGE END FROM EXTENDING OUT BEYOND EDGE OF CONCRETE DECK IN AREA UNDER EXPANSION JOINT.

VII. ASPHALT CONCRETE:

IN ORDER TO OBTAIN A SMOOTH RIDING SURFACE, THE ASPHALT CONCRETE SHALL BE PLACED AFTER CONSTRUCTION OF EACH DECK STAGE (PAVE EACH APPROACH IMMEDIATELY PRIOR TO PLACING TRAFFIC ON BRIDGE). THIS MATERIAL SHALL BE PLACED WITH AN ASPHALT PAVER. THE PAVEMENT ROLLERS AND OTHER PAVING EQUIPMENT SHALL NOT BE ALLOWED ON BRIDGE (TO PREVENT SPALLING OR CRACKING OF CONCRETE, PARTICULARLY AT THE ENDS OF DECK SLAB).

VIII. OPERATIONS:

THE CONTRACTOR SHALL PREPARE AREAS FOR SHOTCRETE SO THAT THEY WILL ALL BE READY FOR VIEWING AT ONE TIME FOR EACH OF THE TWO STAGES. CONTRACTOR SHALL THEN APPLY ALL SHOTCRETE ON BRIDGE IN ONE CONTINUOUS OPERATION/STAGE.

THE CONTRACTOR SHALL SCHEDULE INSTALLATION OF ELASTOMERIC SEALS IN EXPANSION JOINTS SO THAT ALL JOINTS WILL BE SEALED IN ONE CONTINUOUS OPERATION THE SAME DAY.

IX. BENCH MARK:

BENCHMARK #1

RAILROAD SPIKE SET IN POWER POLE #APCO 80–3572.
ELEV. = 600.51 (NAVD 1929)
8+73.9 19.5' LEFT

BENCHMARK #2

RAILROAD SPIKE SET IN POWER POLE #APCO 80–3553 IN TRAFFIC ISLAND. ELEV. = 612.37 (NAVD 1929)
12+81.9 21.8' LEFT

SHEET NO.	INDEX OF DRAWINGS
1	COVER SHEET
2	PLAN & ELEVATION
3	GENERAL NOTE, INDEX & ESTIMATED QUANTITIES
4	SEQUENCE OF CONSTRUCTION
5	TRANSVERSE SECTION & DECK DRAIN DETAILS
6	DECK PLAN
7	DECK SLAB ELEVATIONS & DEFLECTION DIAGRAM
8	CAST-IN-PLACE CONCRETE PARAPET (F-SHAPE)
9	CAST-IN-PLACE CONCRETE PARAPET WITH SIDEWALK
10	PREFORMED ELASTOMERIC JOINT DETAILS
11	BEARING DETAILS
12	PEDESTRIAN FENCE DETAILS
13	WATERLINE SUPPORTS
14	PIER 1
15	PIER 2
16	PIER 1 & 2 DETERIORATED AREAS
17	ABUTMENT REPAIRS
18	REINFORCING STEEL SCHEDULE
19	RIPRAP REPAIR & SEQUENCE OF OPERATIONS
20	TRAFFIC CONTROL SIGNS
21	TRAFFIC CONTROL - STAGE 1
22	TRAFFIC CONTROL - STAGE 2
23	ROAD PLAN
24	GENERAL NOTE (ROADWAY)
25	TYPICAL SECTION
26	SUMMARY
27	PROFILE
28	CROSS SECTIONS - STA. 7+75 TO STA. 8+75
29	CROSS SECTIONS - STA. 9+00 TO STA. 9+75
30	CROSS SECTIONS - STA. 12+50 TO STA. 12+75

ESTIMATED QUANTITIES- (SEE SHEET 26 FOR ADDITIONAL QUANTITIES)

	CONCRETE CLASS A4 CU. YDS.	SHOTCRETE CLASS B SQ. FT.	SUBSTRUCTURE CONCRETE REPAIR SQ. FT.	ENCASE CAPS ⊕ LIN. FT.	ENCASE STEMS LIN. FT.	EPOXY COATED REINFORCING STEEL ⊕ LBS.	BRIDGE DECK GROOVING SQ. YDS. ⊕	CONCRETE PARAPET LIN. FT. ⊕	WATERPROOFING CLASS III SQ. YDS. ⊕	PREFORMED ELASTOMERIC JOINT SEALER L.F. ⊕ 3"	4"	SURFACE PREPARATION CLASS IV SQ. FT.	REPLACE BEARINGS EACH ⊕	REPLACE ANCHOR BOLTS EACH ⊕	PEDESTRIAN FENCE LIN. FT.	TRAFFIC BARRIER SERVICE CONCRETE PARAPET (SINGLE FACE) (MOD'FD.) LIN. FT.
SUPERSTRUCTURE	245.7	–	–	–	–	46,040	812	221	1103	54	54	–	–	–	442	456
ABUTMENT A	–	–	296	–	–	1,110	–	–	–	–	–	410	6	12	–	–
PIER 1	–	–	–	49.5	44.3	4,080	–	–	–	–	–	668	12	24	–	–
PIER 2	–	160	–	49.5	–	2,840	–	–	–	–	–	519	12	24	–	–
ABUTMENT B	–	–	298	–	–	1,110	–	–	–	–	–	390	6	12	–	–
TOTALS	245.7	160	594	99	44.3	55,180	812	442	1103	54	54	1987	36	72	442	456

⊕ – DENOTES ITEMS TO BE PAID FOR ON BASIS OF PLAN QUANTITIES IN ACCORDANCE WITH CURRENT ROAD AND BRIDGE SPECIFICATIONS.
COST OF DECK DRAINS (DRAIN ASSEMBLIES) SHALL BE INCLUDED IN THE CONTRACT UNIT PRICE FOR CONCRETE CLASS A4.

MOBILIZATION – LUMP SUM
REMOVE PORTION OF EXISTING STRUCTURE (STR. NO. 8010) – LUMP SUM
RECOAT EXISTING STRUCTURE – LUMP SUM
ENVIRONMENTAL PROTECTION, HEALTH & SAFETY – LUMP SUM
DISPOSAL OF MATERIAL, TYPE B – LUMP SUM
REPLACE WATERLINE SUPPORTS – LUMP SUM
JACKING & BLOCKING SUPERSTRUCTURE – LUMP SUM
REPAIR RIP RAP – LUMP SUM (35± SQ. FT. FOR ESTIMATING PURPOSES ONLY)

CADD REFERENCE NO. 02029GN.DWG

CRANEHILL DRIVE OVER IVY CREEK
GENERAL NOTE, INDEX & ESTIMATED QUANTITIES

COMMONWEALTH OF VIRGINIA
JAMES F. GRIZZLE, JR.
No. 35295
1-22-04
PROFESSIONAL ENGINEER

SCHWARTZ & ASSOCIATES, INC.
CONSULTING ENGINEERS
7331 TIMBERLAKE ROAD
LYNCHBURG, VA.

THE CITY OF LYNCHBURG, VIRGINIA
DEPT. OF PUBLIC WORKS
ENGINEERING

DESIGNED BY: JFG	DRAWN BY: JFG	CHECKED BY: RWS
SCALE: NONE		PROJECT NO.: 02021–B
COMM. NO. 03026	DATE: JANUARY 20, 2004	SHEET 3 OF 30

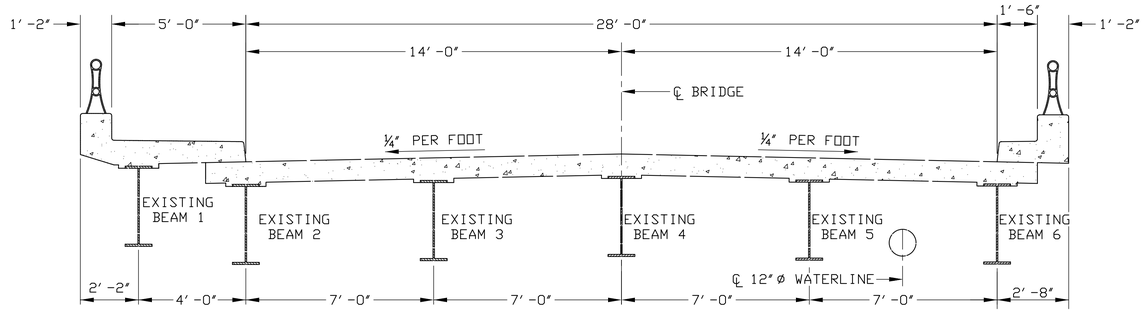

EXISTING TRANSVERSE SECTION

3/8″ = 1′-0″

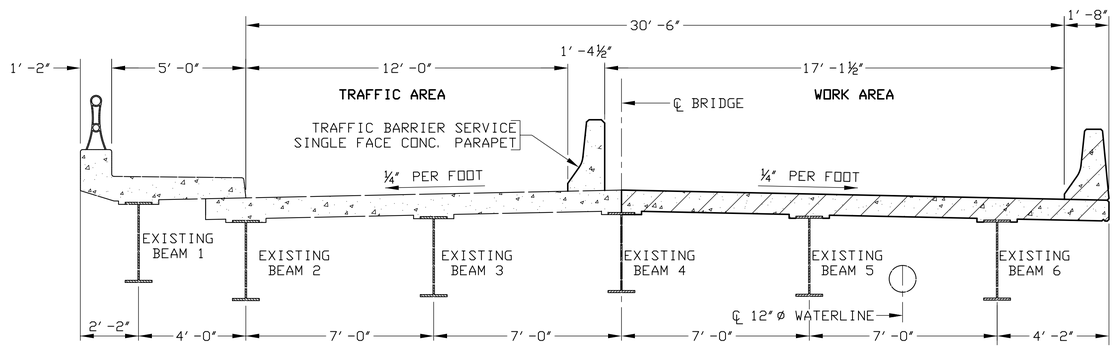

TRANSVERSE SECTION – STAGE 1

3/8″ = 1′-0″

NOTE:

TRAFFIC BARRIER SERVICE CONCRETE PARAPET (SINGLE FACE) SHALL BE STANDARD MB-10A EXCEPT AS MODIFIED ON THIS SHEET.

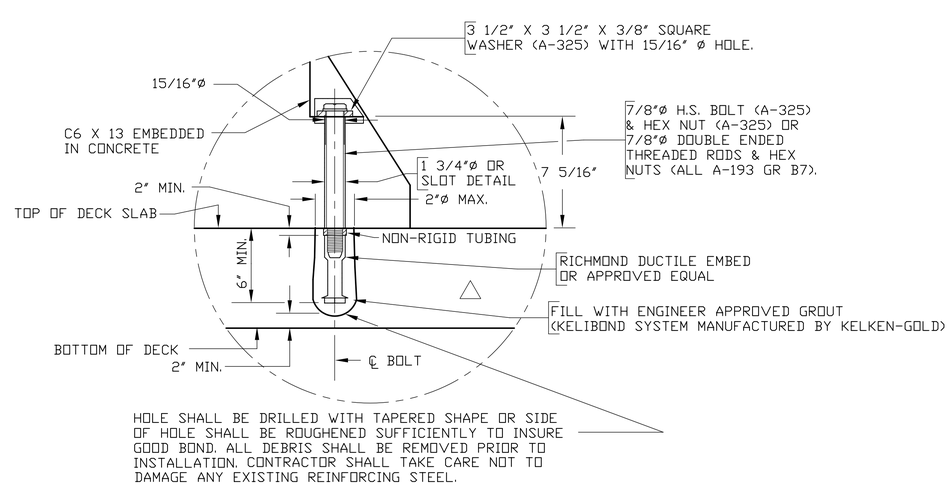

DETAIL "A"
(ANCHORAGE FOR SINGLE FACE CONCRETE PARAPET)

AFTER REMOVING "CONCRETE PARAPET TRAFFIC BARRIER", REMOVE 7/8″ø BOLTS OR THREADED RODS, REMOVE NON-RIGID TUBING AND SANDBLAST HOLES & FILL HOLES WITH ENGINEER APPROVED GROUT (KELIBOND SYSTEM MANUFACTURED BY KELKEN-GOLD)

ADHESIVE TYPE ANCHORS MAY BE USED IN LIEU OF THAT SHOWN IN DETAIL A, SUBJECT TO APPROVAL BY THE ENGINEER AND PROVIDED THAT, UPON TESTING, A MINIMUM PULLOUT OF 32,000 LBS. IS ATTAINED.

DETAIL "B" ANCHOR SHALL BE USED FOR STAGE 1.

USE DETAIL "A" ANCHOR FOR STAGE 2.

SEE STANDARD MB-10A FOR DETAILS NOT SHOWN.

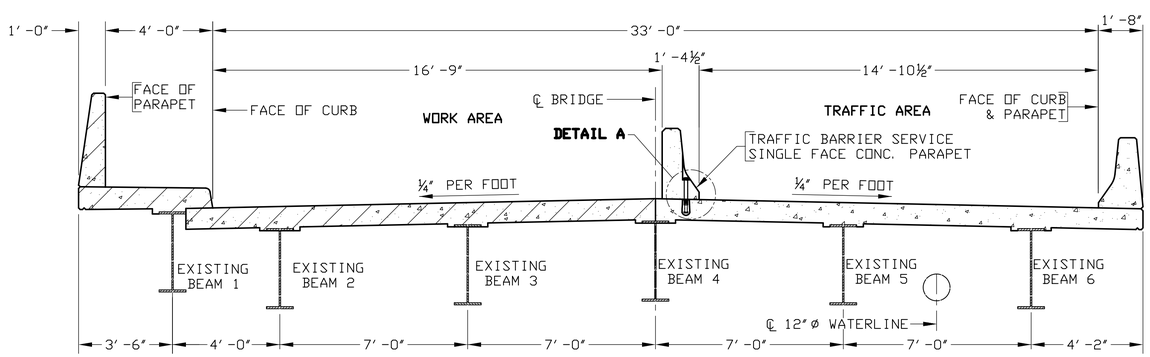

TRANSVERSE SECTION – STAGE 2

3/8″ = 1′-0″

NOTE:

CONSTRUCTION JOINT IN DECK SHALL BE VEE'D TO MINIMUM DEPTH SHOWN BELOW BY SANDBLASTING, BLOWN OUT AND CLEANED OF LOOSE AND/OR UNSOUND MATERIAL, THEN FILLED WITH EPOXY. THE EPOXY SHALL BE ALLOWED TO CURE COMPLETELY BEFORE REMOVING CONCRETE TRAFFIC BARRIER.

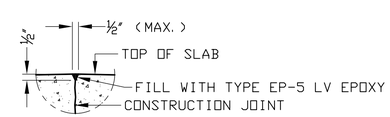

DETAIL E/54

NOT TO SCALE

VERTICAL FACE OF CONSTRUCTION JOINT SHALL BE MAULED TO COARSE AGGREGATE AND COATED WITH ARMATEC 110 BONDING EPOXY PRIOR TO PLACMENT OF STAGE 2 DECK CONCRETE.

– DENOTES NEW CONSTRUCTION

CADD REFERENCE NO. 02029.DWG

CRANEHILL DRIVE OVER IVY CREEK
SEQUENCE OF CONSTRUCTION

COMMONWEALTH OF VIRGINIA
JAMES F. GRIZZLE, JR.
No. 35295
1-22-04
PROFESSIONAL ENGINEER

SCHWARTZ & ASSOCIATES, INC.
CONSULTING ENGINEERS

7331 TIMBERLAKE ROAD
LYNCHBURG, VA.

THE CITY OF LYNCHBURG, VIRGINIA
DEPT. OF PUBLIC WORKS
ENGINEERING

DESIGNED BY: JFG	DRAWN BY: JFG	CHECKED BY: RWS
SCALE: NONE		PROJECT NO.: 02021-B
COMM. NO. 03026	DATE: JANUARY 20, 2004	SHEET 4 OF 30

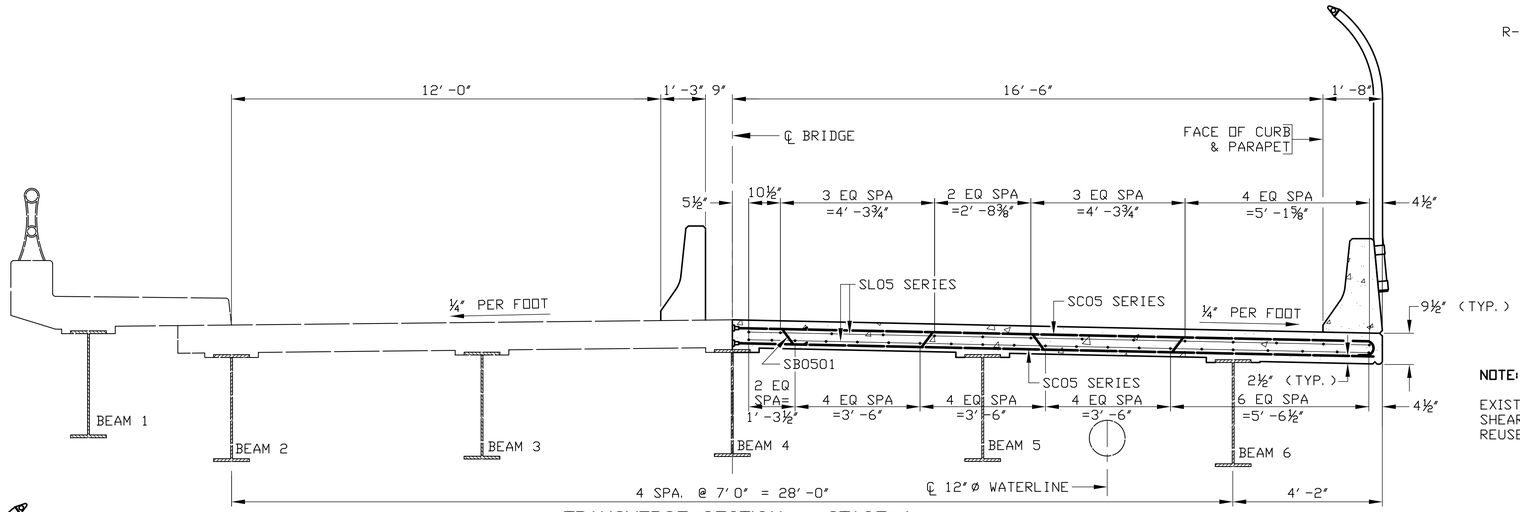

TRANSVERSE SECTION – STAGE 1

1/2″ = 1′-0″

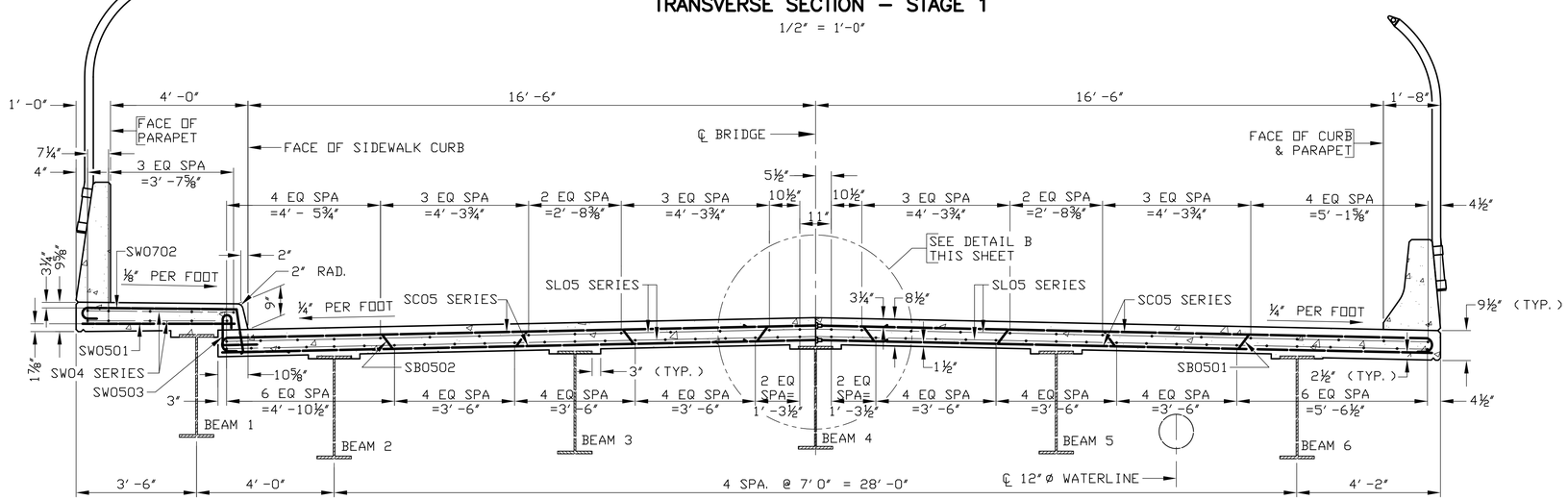

TRANSVERSE SECTION – STAGE 2

(EXISTING SHEAR CONNECTORS & DIAPHRAGMS NOT SHOWN)

1/2″ = 1′-0″

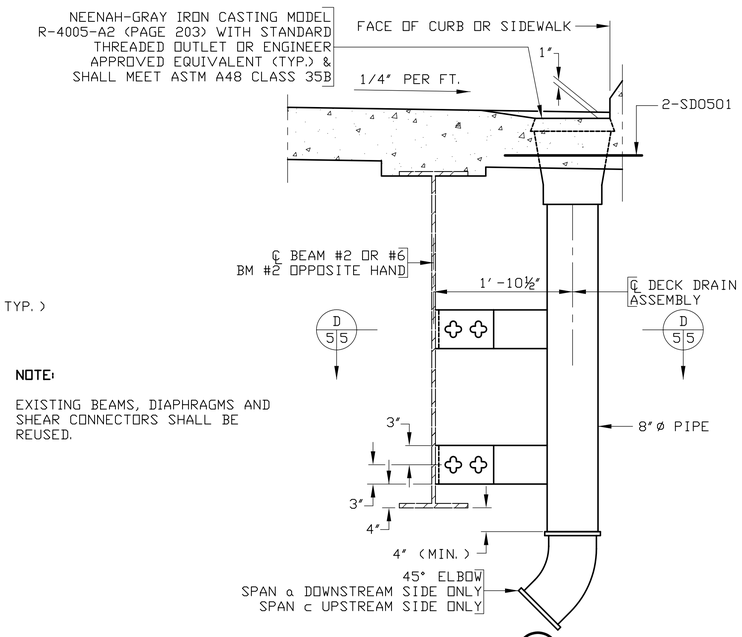

SECTION C/5/5

NOT TO SCALE

NOTE:

EXISTING BEAMS, DIAPHRAGMS AND SHEAR CONNECTORS SHALL BE REUSED.

NOTES:

FOR DECK DRAIN SPACINGS, SEE SHEET 2.

WASTE CONCRETE (NO REINFORCING STEEL EXPOSED) FROM THE STRUCTURE DEMOLITION SHALL BE PLACED ON THE GROUND UNDER EACH DECK DRAIN (NOT LOCATED OVER WATERWAY AND WHERE PRACTICAL), AS DIRECTED BY THE ENGINEER.

SHIFT LONGITUDINAL AND BEND OR ADJUST TRANSVERSE REINFORCING STEEL IN DECK TO CLEAR DECK DRAIN ASSEMBLY. REINFORCING STEEL SHALL NOT BE CUT.

ALL PIPES AND FITTINGS IN DRAIN ASSEMBLIES SHALL BE BLACK STEEL CONFORMING TO SECTION 232.02(4)a OF VDOT ROAD & BRIDGE SPECIFICATIONS. STEEL USED IN DRAIN PIPE BRACKETS SHALL BE ASTM A709, GRADE 36.

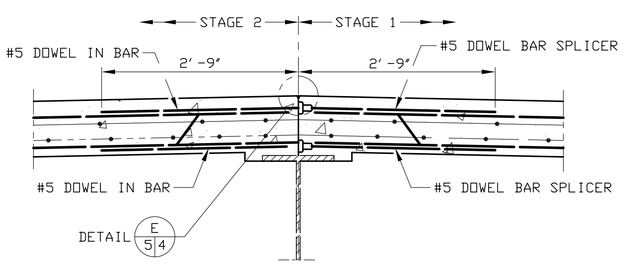

DETAIL B

1″ = 1′-0″

NOTES:

ALL REINFORCING STEEL SHALL BE EPOXY COATED.

MECHANICAL DOWEL BAR SPLICERS FOR REBARS SHALL BE FROM RICHMOND SCREW ANCHOR CO. OR ENGINEER APPROVED EQUIVALENT.

ALL COSTS FOR DOWEL BAR SPLICERS SHALL BE PAID FOR IN UNIT PRICE BID FOR REINFORCING STEEL.

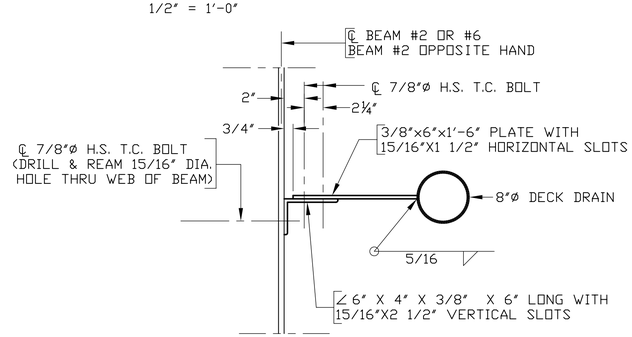

SECTION D/5/5

NOT TO SCALE

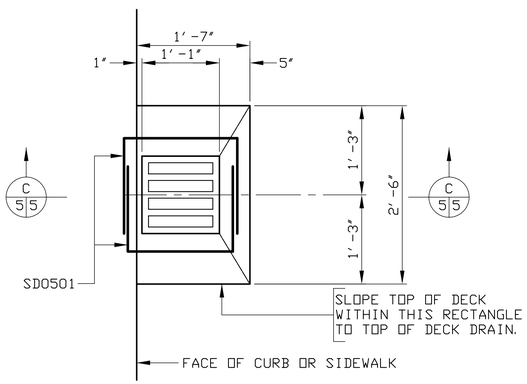

PART PLAN SHOWING DECK DRAIN

NOT TO SCALE

CRANEHILL DRIVE OVER IVY CREEK
TRANSVERSE SECTION & DECK DRAIN DETAILS

COMMONWEALTH OF VIRGINIA
JAMES F. GRIZZLE, JR.
No. 35295
1-22-04
PROFESSIONAL ENGINEER

SCHWARTZ & ASSOCIATES, INC.
CONSULTING ENGINEERS
7331 TIMBERLAKE ROAD
LYNCHBURG, VA.

THE CITY OF LYNCHBURG, VIRGINIA
DEPT. OF PUBLIC WORKS
ENGINEERING

DESIGNED BY: JFG	DRAWN BY: JFG	CHECKED BY: RWS
SCALE: AS NOTED	PROJECT NO.: 02021-B	
COMM. NO. 03026	DATE: JANUARY 20, 2004	SHEET 5 OF 30

CADD REFERENCE NO. 02029.DWG

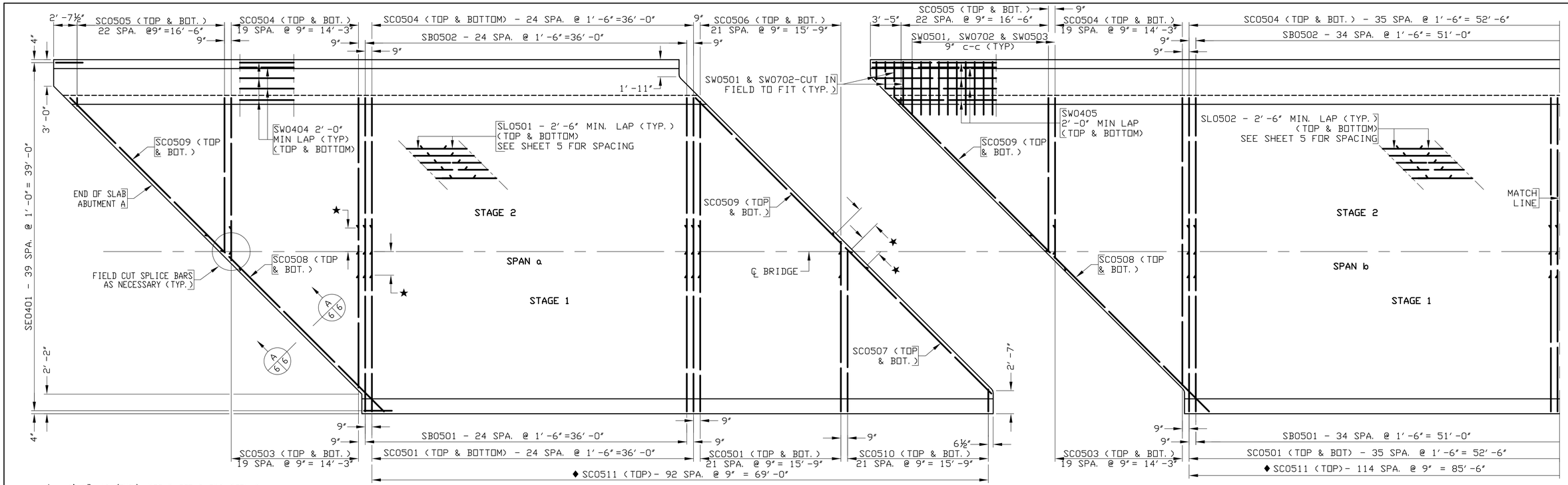

★ – 2'-9" LAP (TYP.), SEE SHEET 5 FOR DETAILS.

DECK PLAN

3/16" = 1'-0"

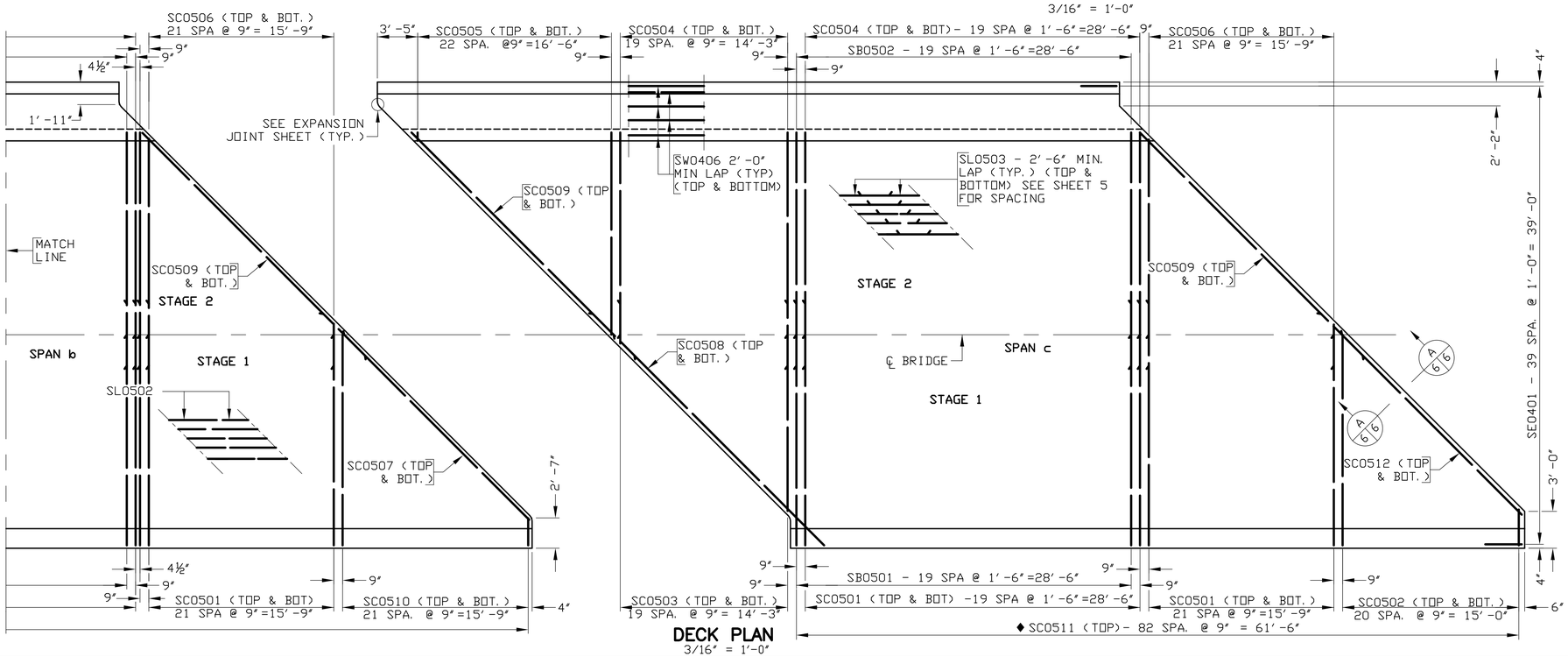

DECK PLAN

3/16" = 1'-0"

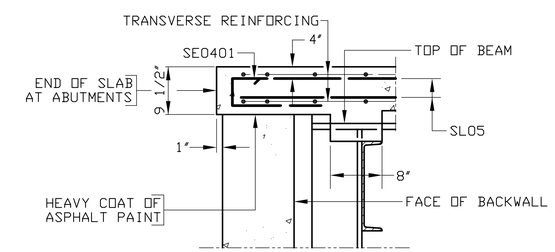

PART SECTION A/6.6

NOT TO SCALE

◆ – LAP WITH EVERY REBAR OVER EXTERIOR BEAM

CRANEHILL DRIVE OVER IVY CREEK
DECK PLAN

COMMONWEALTH OF VIRGINIA
JAMES F. GRIZZLE, JR.
No. 35295
1-22-04
PROFESSIONAL ENGINEER

SCHWARTZ & ASSOCIATES, INC.
CONSULTING ENGINEERS

7331 TIMBERLAKE ROAD
LYNCHBURG, VA.

THE CITY OF LYNCHBURG, VIRGINIA
DEPT. OF PUBLIC WORKS
ENGINEERING

DESIGNED BY: JFG	DRAWN BY: JFG	CHECKED BY: RWS
SCALE: AS NOTED		PROJECT NO.: 02021-B
COMM. NO. 03026	DATE: JANUARY 20, 2004	SHEET 6 OF 30

CADD REFERENCE NO. 02029.DWG

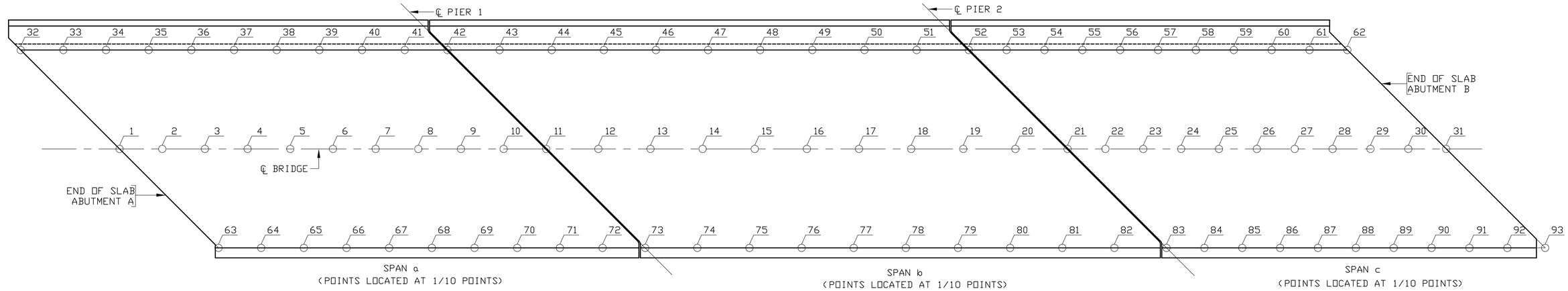

DECK SLAB ELEVATIONS

1/8" = 1'-0"

TOP OF SLAB ELEVATIONS - SPANS a, b, & c

POINT	1	2	3	4	5	6	7	8	9	10	11	12	13	14	15	16	17	18	19	20	21
ELEV.	599.68	599.91	600.14	600.38	600.61	600.84	601.07	601.31	601.54	601.77	602.01	602.29	602.58	602.86	603.14	603.43	603.71	604.00	604.28	604.57	604.85

POINT	22	23	24	25	26	27	28	29	30	31	32	33	34	35	36	37	38	39	40	41	42
ELEV.	605.06	605.26	605.47	605.68	605.89	606.09	606.30	606.51	606.71	606.92	598.79	599.03	599.26	599.49	599.73	599.96	600.19	600.43	600.66	600.89	601.12

POINT	43	44	45	46	47	48	49	50	51	52	53	54	55	56	57	58	59	60	61	62	63
ELEV.	601.41	601.69	601.98	602.26	602.55	602.83	603.11	603.40	603.68	603.97	604.17	604.38	604.59	604.80	605.00	605.21	605.42	605.62	605.83	606.04	599.87

POINT	64	65	66	67	68	69	70	71	72	73	74	75	76	77	78	79	80	81	82	83	84
ELEV.	600.11	600.34	600.57	600.81	601.04	601.27	601.50	601.74	601.97	602.20	602.49	602.77	603.06	603.34	603.62	603.91	604.19	604.48	604.76	605.05	605.25

POINT	85	86	87	88	89	90	91	92	93
ELEV.	605.46	605.67	605.87	606.08	606.29	606.50	606.70	606.91	607.12

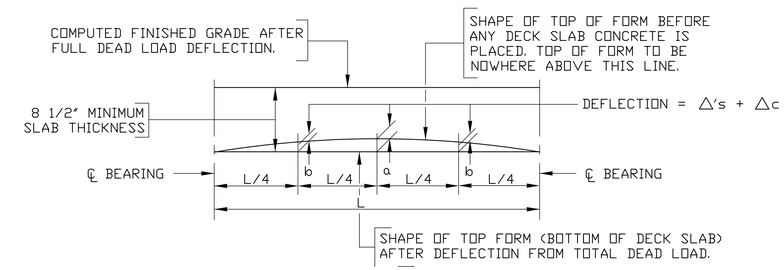

SPAN	BEAM	DEAD LOAD DEFLECTION AT a		DEAD LOAD DEFLECTION AT b	
		△'s	△c	△'s	△c
Span a	1	3/4"	1/4"	1/2"	3/16"
	2-5	1 1/4"	0"	7/8"	0"
	6	1 3/8"	3/16"	1"	1/8"
Span b	1	1 1/16"	1/4"	3/4"	3/16"
	2-5	1 11/16"	0"	1 3/16"	0"
	6	1 15/16"	1/4"	1 3/8"	3/16"
Span c	1	1/2"	1/8"	3/8"	1/8"
	2-5	13/16"	0"	5/8"	0"
	6	15/16"	3/16"	11/16"	1/8"

△'s = DEFLECTION OF BEAM FROM DEAD LOAD OF CONCRETE DECK SLAB AND BOLSTERS. (INCLUSIVE OF CONSTRUCTION TOLERANCES.)

△c = DEFLECTION OF BEAM FROM SUPERIMPOSED DEAD LOAD (e.g. PARAPET) ADDED AFTER DECK SLAB IS CAST.

DEAD LOAD DEFLECTION DIAGRAM

NOT TO SCALE

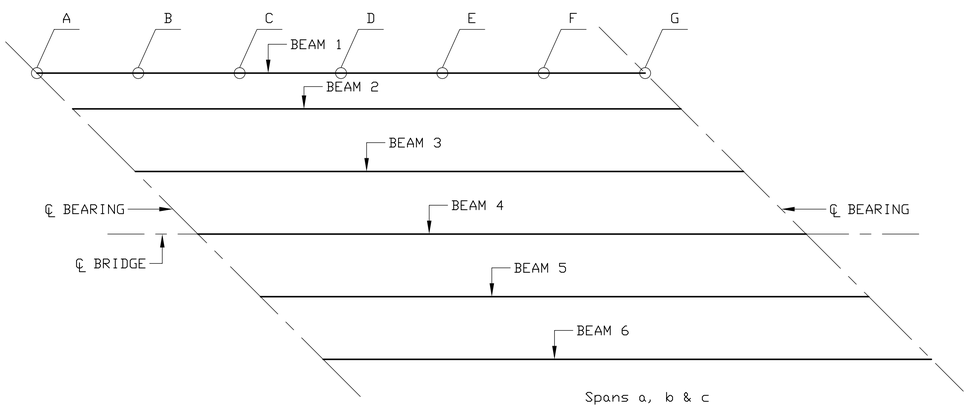

Spans a, b & c
(points located @ 1/6 pts. along ℄ Beams)

BEAM \ POINT		A	B	C	D	E	F	G
SPAN a	1	599.62	599.99	600.35	600.72	601.09	601.45	601.82
	2	599.04	599.40	599.77	600.14	600.50	600.87	601.24
	3	599.41	599.78	600.14	600.52	600.88	601.25	601.61
	4	599.79	600.15	600.52	600.89	601.25	601.62	601.99
	5	599.87	600.24	600.60	600.97	601.34	601.70	602.07
	6	599.95	600.32	600.69	601.05	601.42	601.79	602.15
SPAN b	1	601.86	602.33	602.80	603.26	603.73	604.20	604.66
	2	601.28	601.75	602.21	602.68	603.15	603.61	604.08
	3	601.66	602.13	602.59	603.06	603.52	603.99	604.46
	4	602.03	602.50	602.96	603.43	603.90	604.36	604.83
	5	602.11	602.58	603.05	603.51	603.98	604.45	604.91
	6	602.20	602.67	603.13	603.60	604.06	604.53	605.00
SPAN c	1	604.71	605.03	605.35	605.68	606.00	606.32	606.65
	2	604.12	604.45	604.77	605.09	605.42	605.74	606.06
	3	604.50	604.82	605.14	605.47	605.79	606.11	606.44
	4	604.87	605.20	605.52	605.84	606.17	606.49	606.81
	5	604.96	605.28	605.60	605.93	606.25	606.57	606.90
	6	605.04	605.36	605.69	606.01	606.33	606.66	606.98

Top of Slab Elevations along ℄ Beams

CRANEHILL DRIVE OVER IVY CREEK
DECK SLAB ELEVATIONS & DEFLECTION DIAGRAM

COMMONWEALTH OF VIRGINIA
James F. Grizzle Jr.
JAMES F. GRIZZLE, JR.
No. 35295
1-22-04
PROFESSIONAL ENGINEER

COMM. NO. 03026

SCHWARTZ & ASSOCIATES, INC.
CONSULTING ENGINEERS

7331 TIMBERLAKE ROAD
LYNCHBURG, VA.

THE CITY OF LYNCHBURG, VIRGINIA
DEPT. OF PUBLIC WORKS
ENGINEERING

DESIGNED BY: JFG	DRAWN BY: JFG	CHECKED BY: RWS
SCALE: AS NOTED		PROJECT NO.: 02021-B
DATE: JANUARY 20, 2004		SHEET 7 OF 30

CADD REFERENCE NO. 02029.DWG

FHWA REGION	STATE	FEDERAL AID ROUTE	FEDERAL AID PROJECT	STATE ROUTE	STATE PROJECT	SHEET NO.
3	VA.				CRANEHILL DR./IVY CREEK	

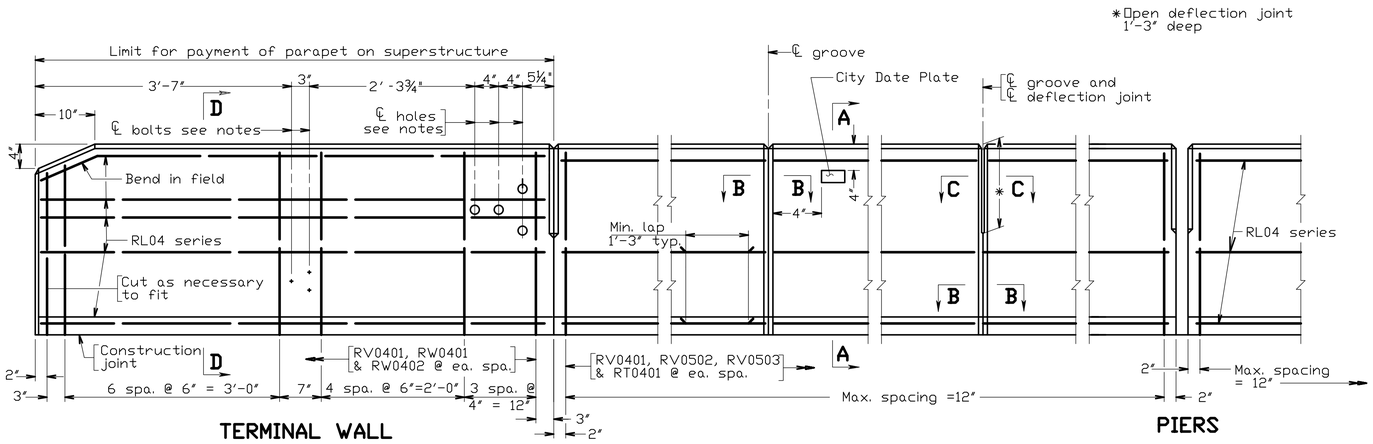

TERMINAL WALL

ABUTMENTS

PIERS

ELEVATION

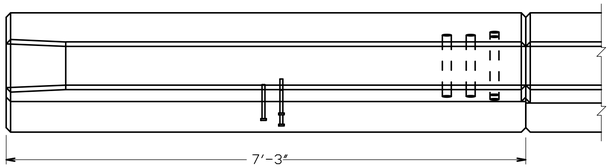

PART PLAN

PEDESTRIAN FENCE NOT SHOWN

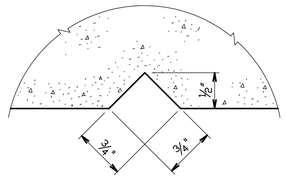

SECTION B-B
Full Scale
Groove detail for both sides of parapet

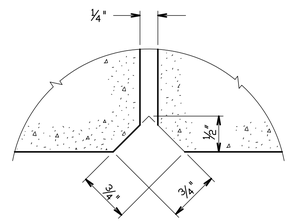

SECTION C-C
Full Scale
Deflection joint detail for both sides of parapet

Notes:

Rounded edges with 1" radius may be used in lieu of ¾" bevels along top of parapet.

Reinforcing bars RV0502 and RV0503 shall be galvanized. All other reinforcing bars shall be epoxy coated.

Detail shown at pier is applicable when joint is in slab. When slab is continuous over pier, use groove and deflection joint.

Spacing of grooves to be approximately 8'-0". If lighting standard is used (see Bridge Conduit System), groove shall be located approximately 4'-0" from ℄ light standard. Spacing of deflection joints shall not exceed three groove spaces.

Barrier delineator size, color, and spacing to be in accordance with the Specifications. Cost of delineator to be included in the price bid for parapet. Reflective surface of barrier delineator, in all instances, to be facing oncoming traffic.

The Contractor shall determine all dimensions and details necessary for installation.

All concrete shall be Class A4.

Terminal walls are detailed to take guardrail attachment GR-FOA-2.

Holes, where shown, shall be formed with sleeves of 1½" dia. nominal PVC pipe.

Bolts, where shown, shall be ⅝" dia. expansion anchor bolts, 6" long to be drilled and installed when rub rail is attached.

For extruded parapets: During extrusion, open joints at abutments and piers shall be formed by the use of lubricated plates or other means so that uniformity of the opening and chamfers is maintained. Dimension of 1" (as shown in Section thru Joints for Extrusion Only) is additional deck slab that shall be cast at Contractor's expense. Dimension(s) to face of curb shall not be reduced.

Use 2 City of Lynchburg standard date plates furnished by the City and mount in parapet.

REINFORCING STEEL SCHEDULE

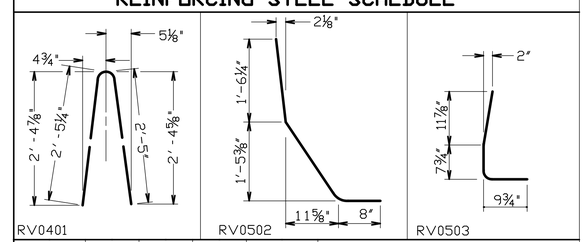

Mark	No.	Size	Pin ø	Length	Location
RT0401		#4	—	3'-0"	Slab
RV0401		#4	3"	5'-0"	Parapet
RV0502		#5	3¾"	3'-10"	Parapet
RV0503		#5	3¾"	2'-4"	Parapet
RL04		#4	—		Parapet

Dimensions in bending diagram are out-to-out of bars, except as shown.

Cost of all bars listed in schedule to be included in price bid for parapet.

Gross concrete quantities (C.Y.) = Lin. ft. x 0.105
All concrete above roadway slab

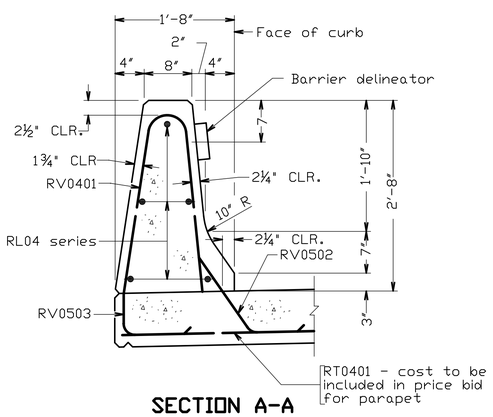

SECTION A-A

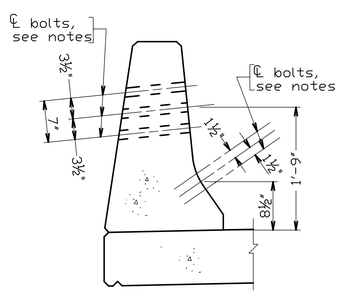

SECTION D-D
Reinforcing steel not shown

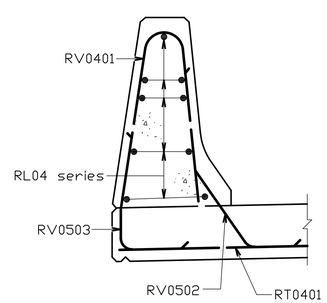

SECTION D-D
Holes and bolts not shown. For details not shown, see Section A-A.

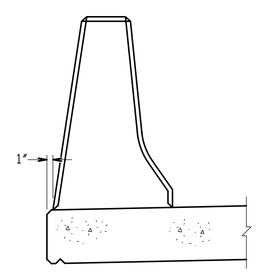

SECTION THRU JOINTS FOR EXTRUSION ONLY

No.	Description	Date
	Revisions	

COMMONWEALTH OF VIRGINIA
DEPARTMENT OF TRANSPORTATION

STRUCTURE AND BRIDGE DIVISION

CAST-IN-PLACE CONCRETE PARAPET (F-SHAPE)

Designed: S&B DIV. JFG
Drawn: S&B DIV. JFG
Checked: S&B DIV. RWS

Date: Jan. 20, 2004

Plan No.: BPB-3B

Sheet No.: 8 of 30

Scale: 1" = 1'-0" unless otherwise noted.

© 2001, Commonwealth of Virginia

07-02-01

BPB-3B

FHWA REGION	STATE	FEDERAL AID ROUTE	FEDERAL AID PROJECT	STATE ROUTE	STATE PROJECT	SHEET NO.
3	VA.					

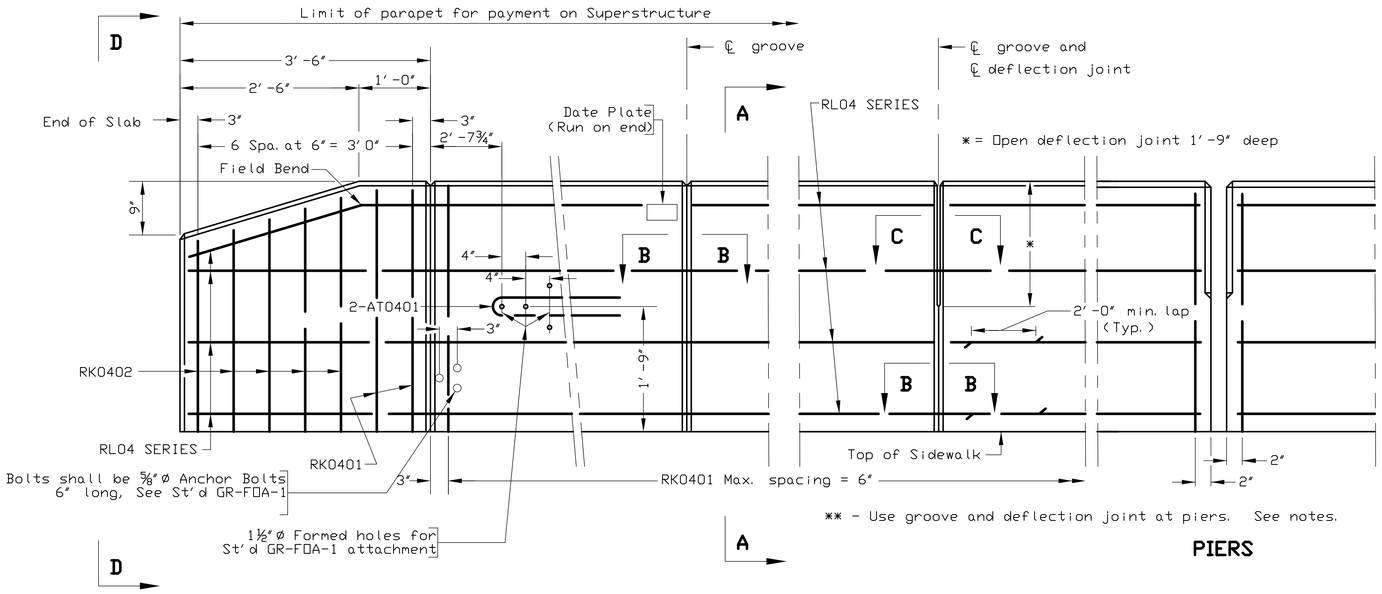

ELEVATION
Scale: 1″ = 1′-0″

PIERS

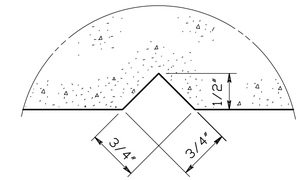

SECTION B-B
Full Scale

Groove detail for
both sides of parapet

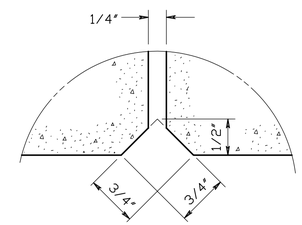

SECTION C-C
Full Scale

Deflection joint detail for
both sides of parapet

NOTES:

Rounded edges with 1″ radius may be used in lieu of bevels along top of parapet.

RK0401 & RK0402 Reinforcing bars shall be galvanized. All other reinforcing bars shall be epoxy coated.

Detail shown at pier is applicable when joint is in slab. When slab is continuous over pier, use groove and deflection joint.

Spacing of grooves to be approximately 8′-0″. If lighting standard is used (see Bridge Conduit System), groove shall be located approximately 4′-0″ from L light standard. Spacing of deflection joints shall not exceed three groove spaces.

Barrier delineator size, color, and spacing to be in accordance with the Specifications. Cost of delineator to be included in the price bid for parapet. Reflective surface of barrier delineator, in all instances, to be facing oncoming traffic.

The Contractor shall determine all dimensions and details necessary for installation.

All concrete shall be Class A4.

Terminal walls are detailed to take guardrail attachment GR-FDA-1.

Holes, where shown, shall be formed with sleeves of 1 1/2″ dia. nominal PVC pipe & shall remain in place.

Bolts, where shown, shall be ⅝″ø expansion anchor bolts, 6″ long to be drilled and installed when rub rail is attached.

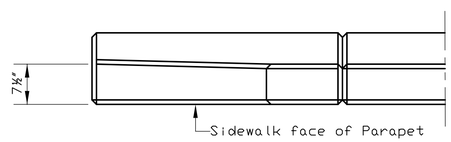

PART PLAN
Scale: 1″ = 1′-0″

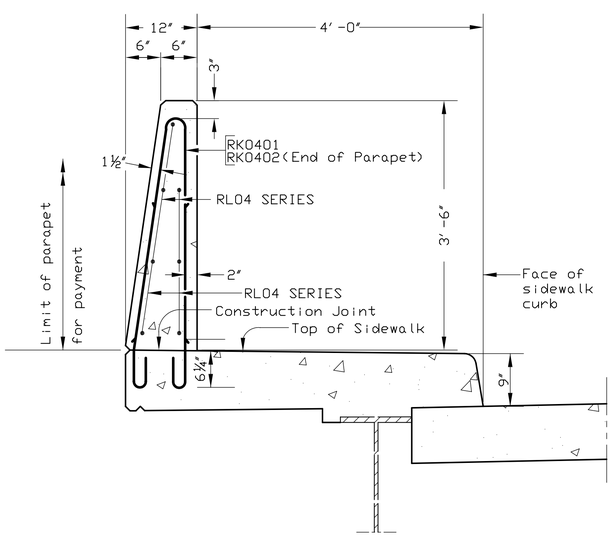

SECTION A-A
Scale: 1″ = 1′-0″

PEDESTRIAN FENCE NOT SHOWN

Gross concrete quantities (C.Y) = Lin. ft. x 0.097
All concrete above sidewalk

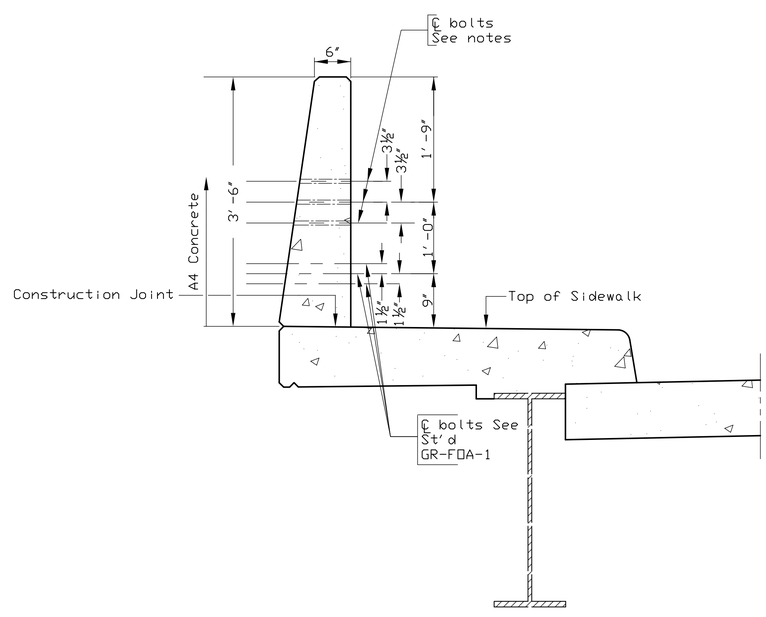

SECTION D-D
Scale: 1″ = 1′-0″

REINFORCING STEEL SCHEDULE

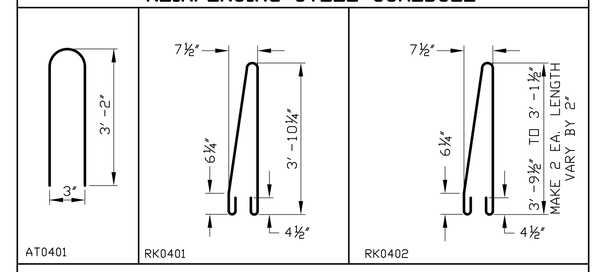

Dimensions in bending diagram are out to
out of bars, except as shown.

Mark	No.	Size	Length	Pin ø	Location
RK0401		#4	8′-8″	2″	Slab
RK0402	10	#4	7′-4″ to 8′-8″	2″	Terminal Wall
RL04		#4		——	Parapet
AT0401	4	#4	6′-6″	2″	Terminal Wall

Cost of all bars listed in schedule to be included in price bid for parapet.

CRANEHILL DRIVE OVER IVY CREEK

No.	Description	Date
	Revisions	

COMMONWEALTH OF VIRGINIA
DEPARTMENT OF TRANSPORTATION

STRUCTURE AND BRIDGE DIVISION

CAST-IN-PLACE CONCRETE PARAPET WITH SIDEWALK

Designed: S&B DIV. JFG
Drawn: S&B DIV. JFG
Checked: S&B DIV. RWS

Date	Plan No.	Sheet No.
Jan. 20, 2004	BPB-6A	9 of 30

© 1991, Commonwealth of Virginia

CADD BPB-6A 8-23-91 (MODIFIED 9/2003)

FHWA REGION	STATE	FEDERAL AID ROUTE	FEDERAL AID PROJECT	STATE ROUTE	STATE PROJECT	SHEET NO.
3	VA.				CRANEHILL DR./IVY CREEK	

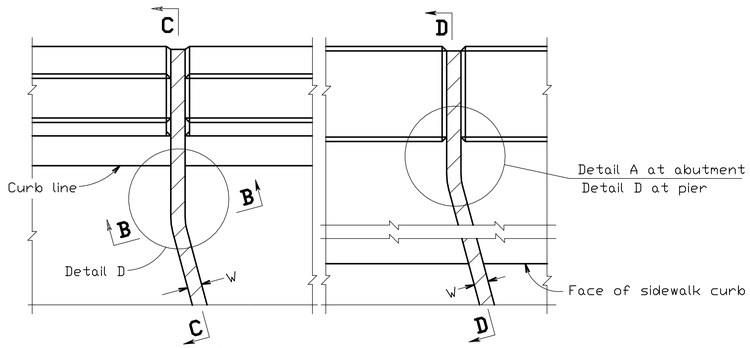

PIER

ABUTMENT OR PIER (SIDEWALK)

PART PLAN

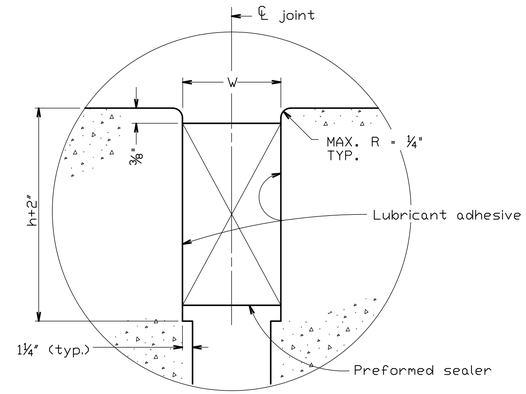

DETAIL B

Notes:

Section of sealer shown is for heavy duty structural type sealer and may vary slightly depending on manufacturer.

As nearly as possible, sides of joints shall be straight, vertical and parallel. The area of the installation shall be free from cracks and spalls.

Sealer shall be installed in one continuous piece except for sidewalk areas.

Joint width W is the final joint width of the cured concrete when placed at 60° F. The width W shall be increased or decreased for every 10° F temperature drop or rise respectively by t. When formed, joint width W shall be reduced by the amount Δ to compensate for the opening of the joint caused by the deflection of the beam when the deck concrete is placed. If the joint is formed so that the form material will not move and the joint will not open as the deck concrete is placed, then adjustment Δ shall not be made.

Fixed Bearing: $\Delta = \frac{4d\,\Delta\text{'s}}{L}$

Expansion Bearing: $\Delta = \frac{d\,\Delta\text{'s}}{L}$

d = Total rotation depth from top of slab to point of rotation on bearing.

Δ's = Deflection of beam at midspan from dead load of concrete deck slab and bolsters. (See dead load deflection diagram.)

L = Length of span.

Δ = Compensation for joint opening due to deflection of beam during placement of concrete deck slab and bolsters for the last span placed adjacent to the joint.

All the dimensions are in the same units.

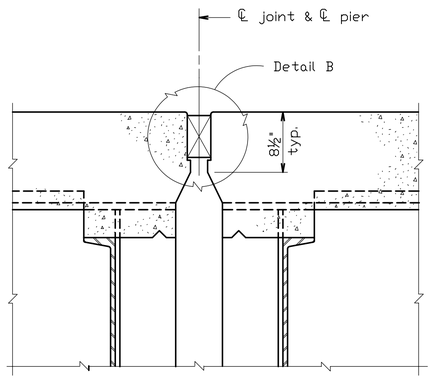

SECTION B-B

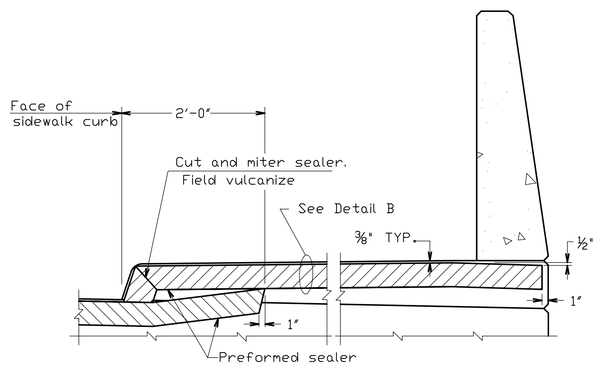

SECTION D-D

Abutment	Pier	Sealer Size b	Sealer Depth h	Joint Width W	t
	1	3"	3"	1 7/8"	-
	2	4"	4 5/8"	2 1/2"	1/16"

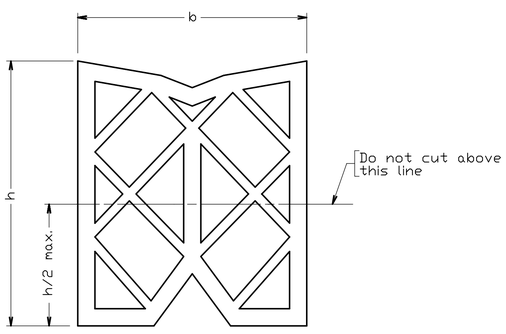

PREFORMED ELASTOMERIC JOINT SEALER

In uncompressed state

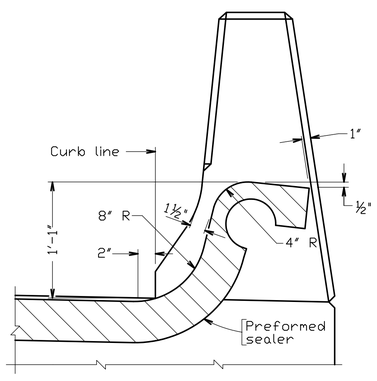

SECTION C-C

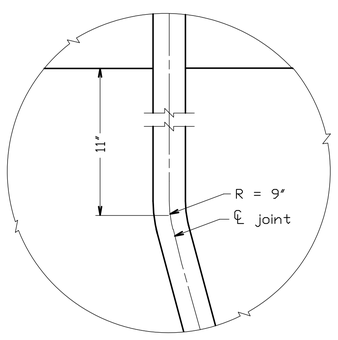

DETAIL D

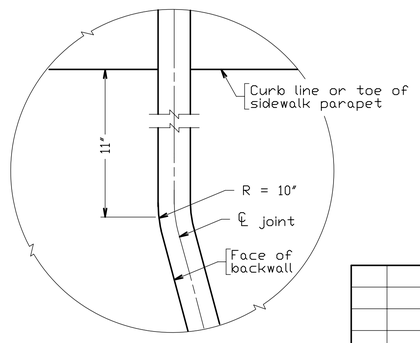

DETAIL A

Not to scale

© 2001, Commonwealth of Virginia

No.	Description	Date
	Revisions	

COMMONWEALTH OF VIRGINIA
DEPARTMENT OF TRANSPORTATION

STRUCTURE AND BRIDGE DIVISION

PREFORMED ELASTOMERIC JOINT DETAILS

Designed: S&B DIV. JEG
Drawn: S&B DIV. JEG
Checked: S&B DIV. RWS

Date	Plan No.	Sheet No.
JAN. 1, 2004	BEJ-2	10 of 30

07-02-01

BEJ-2

FHWA REGION	STATE	FEDERAL AID ROUTE	FEDERAL AID PROJECT	STATE ROUTE	STATE PROJECT	SHEET NO.
3	VA.				CRANEHILL DR. / IVY CREEK	

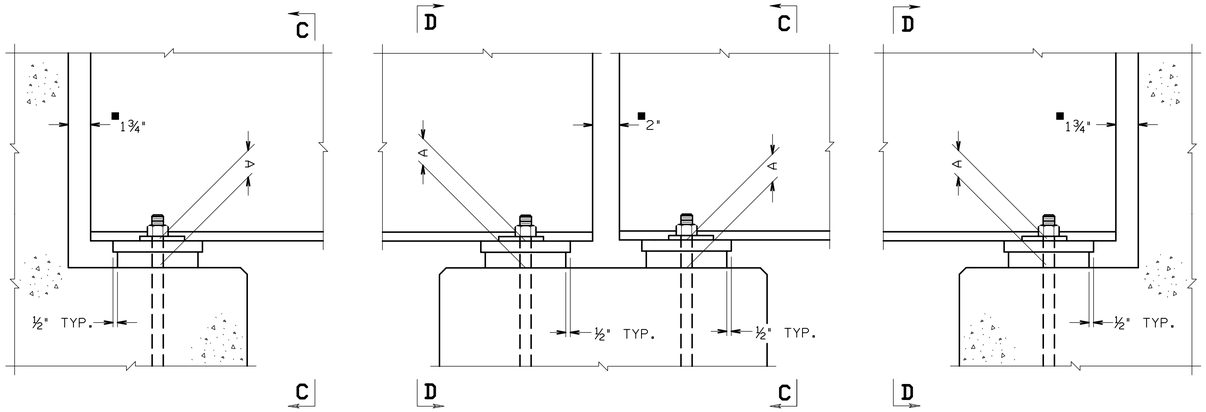

FIXED ASSEMBLY — EXPANSION ASSEMBLY

ABUTMENT ELEVATION

FIXED ASSEMBLY — EXPANSION ASSEMBLY

PIER ELEVATION

ABUTMENT ELEVATION

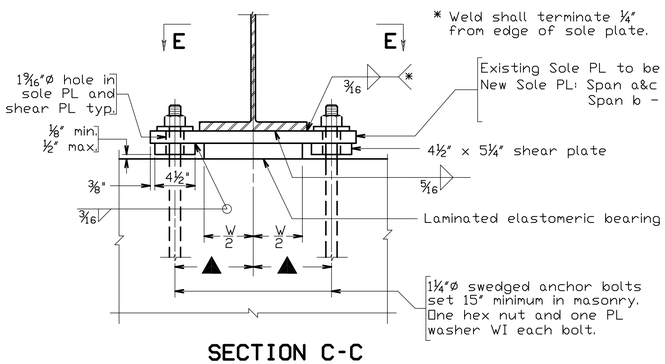

SECTION C-C

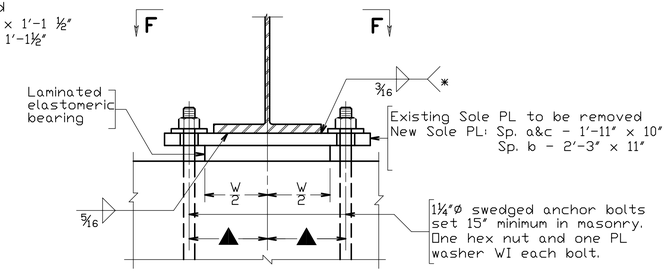

SECTION D-D

▲ - 8¾" span a & c
- 10¾" span b

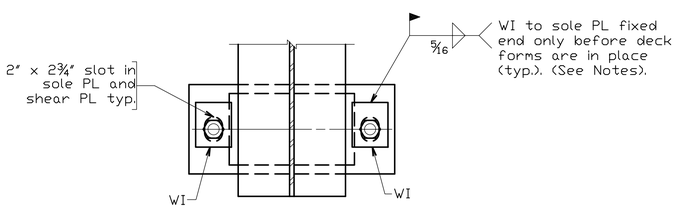

SECTION E-E

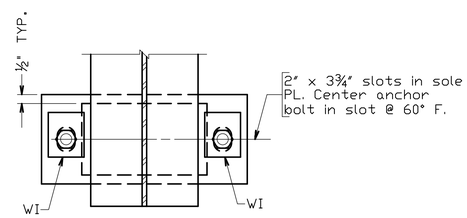

SECTION F-F

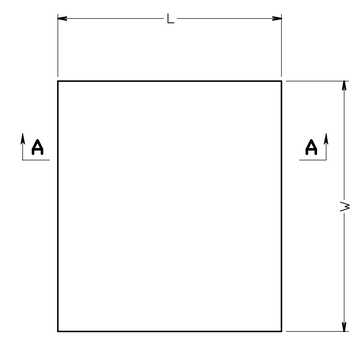

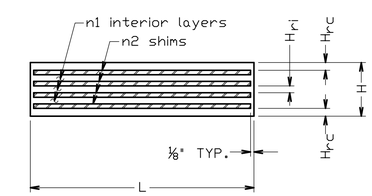

SECTION A-A
LAMINATED ELASTOMERIC BEARING

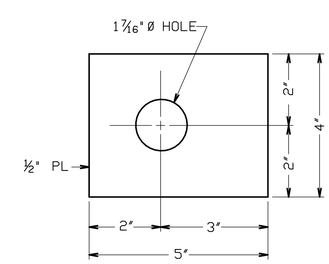

WASHER WI

Notes:

The Contractor shall furnish the elastomeric bearing assembly at the fixed bearing.

Fabricator's Note: **For fixed elastomeric bearings, weld washer to sole plate as shown in Section E-E.**

Material: Elastomer - 50 durometer hardness (Shore A).
Shim - ASTM A36 or A570 mild steel.

Bevel sole plates on all elastomeric assemblies. Minimum sole plate thickness is ¾". Plates shall not be painted on the surface in contact with the elastomeric bearing.

For designation of fixed or expansion bearings, see elevation view on front sheet(s).

Laminated Elastomeric Bearings shall be cast as a single unit and be fabricated in accordance with section 237.02 of the VDOT Road and Bridge Specifications, 2002.

A constant value of shore hardness shall be supplied by the manufacturer. The Shear Modulus at 73°F shall be between 120 & 155 psi.

All structural steel in sole plates shall be ASTM A36.

Do not apply grit to bottom of new sole plates (see VDOT Spec., Section 408.03) until all welding is complete and plate has cooled.

For information concerning bearing replacement, beam jacking & support, reshaping bearing seats, and anchor bolt replacements, see supplemental specifications and special provisions.

■ - Contractor shall trim beam webs & bottom flanges, as directed by the Engineer, to obtain minimum horizontal clearance as required.

Add Stub Stiffeners to girders, span b only at bearings. See sheet 13 for details.

Span	Abut.	Pier	A @ ℄ brg.	B	Laminated Elastomeric Bearing W	L	H	H_{rc}	n1 @ H_{ri}	n2 @ H_s	Grade %	Total Load (kips)
a	A		4"		1'-2"	9"	1 13/16"	1/4"	2 @ 3/8"	3 @ 3/16"	3.27%	97.8
a		1	4"		1'-2"	9"	1 13/16"	1/4"	2 @ 3/8"	3 @ 3/16"	3.27%	97.8
b		1	4"		1'-3"	10"	2 11/16"	1/4"	3 @ 1/2"	4 @ 3/16"	3.27%	105.5
b		2	4"		1'-3"	10"	2 11/16"	1/4"	3 @ 1/2"	4 @ 3/16"	3.27%	105.5
c		2	4"		1'-2"	9"	1 13/16"	1/4"	2 @ 3/8"	3 @ 3/16"	3.27%	90.9
c	B		4"		1'-2"	9"	1 13/16"	1/4"	2 @ 3/8"	3 @ 3/16"	3.27%	90.9

All dimensions in table are in inches.

Not to scale

© 2001, Commonwealth of Virginia

No.	Description	Date
	Revisions	

COMMONWEALTH OF VIRGINIA
DEPARTMENT OF TRANSPORTATION

STRUCTURE AND BRIDGE DIVISION

BEARING DETAILS

Designed: S&B DIV. JFG
Drawn: S&B DIV. JFG
Checked: S&B DIV. RWS

Date	Plan No.	Sheet No.
Jan. 20, 2004	BBD-9	11 of 30

07-02-01

BBD-9

FHWA REGION	STATE	FEDERAL AID ROUTE	FEDERAL AID PROJECT	STATE ROUTE	STATE PROJECT	SHEET NO.
3	VA.				CRANEHILL DR./IVY CREEK	

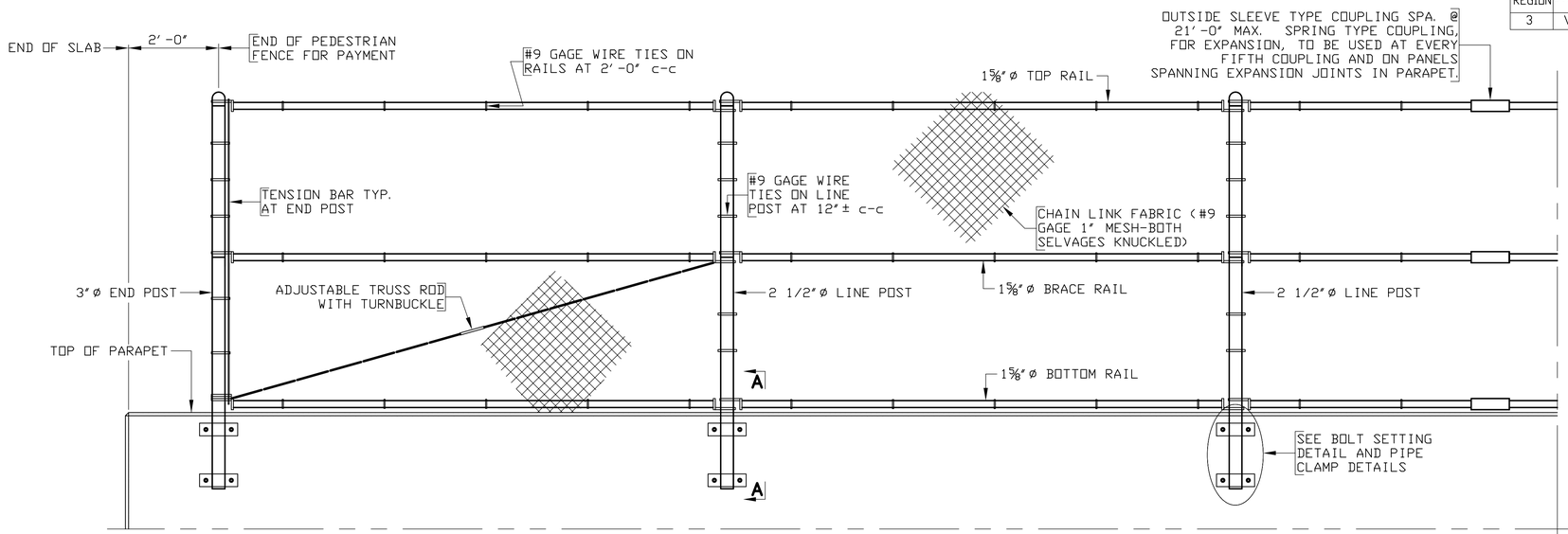

ELEVATION

SCALE: 3/4" = 1'-0"

NOTES:

THE FENCE TO BE USED ON THIS PROJECT SHALL BE AS SHOWN IN THE TYPICAL SECTION ON THIS SHEET.

POSTS SHALL BE SET VERTICAL. RAILS SHALL BE SET PARALLEL TO THE TOP OF PARAPET.

LINE POSTS SHALL BE LOCATED APPROXIMATELY MIDWAY BETWEEN PARAPET GROOVES AND DEFLECTION JOINTS. MAXIMUM SPACING SHALL NOT EXCEED 10'-0".

CHAIN LINK FABRIC, POSTS, RAILS AND OTHER ASSOCIATED HARDWARE SHALL BE COLOR GREEN (SIMILAR TO 595-24227) AND VINYL COATED STEEL.

THREADED INSERTS AND BOLT THREADS SHALL NOT BE GALVANIZED OR COATED.

ENDS OF WIRE TIES SHALL BE TURNED TO OUTSIDE OF FENCE TO PREVENT INJURY TO PEDESTRIANS.

ADJUSTABLE TRUSS ROD WITH TURNBUCKLE SHALL BE INSTALLED BETWEEN LINE POST AND BASE OF END POST.

THREADED INSERTS, WHEN EMBEDDED AS SHOWN, SHALL DEVELOP FULL STRENGTH OF BOLTS.

ALL BOLTS SHALL BE HIGH STRENGTH (ASTM A325).

CHAIN LINK FABRIC SHALL BE PLACED ON INSIDE OF POSTS & RAILS.

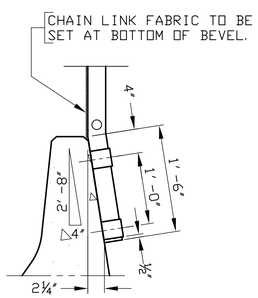

SECTION A-A

SCALE: 1" = 1'-0"

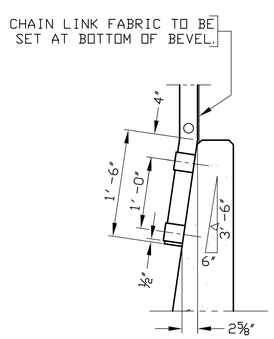

SECTION A-A

SCALE: 1" = 1'-0"

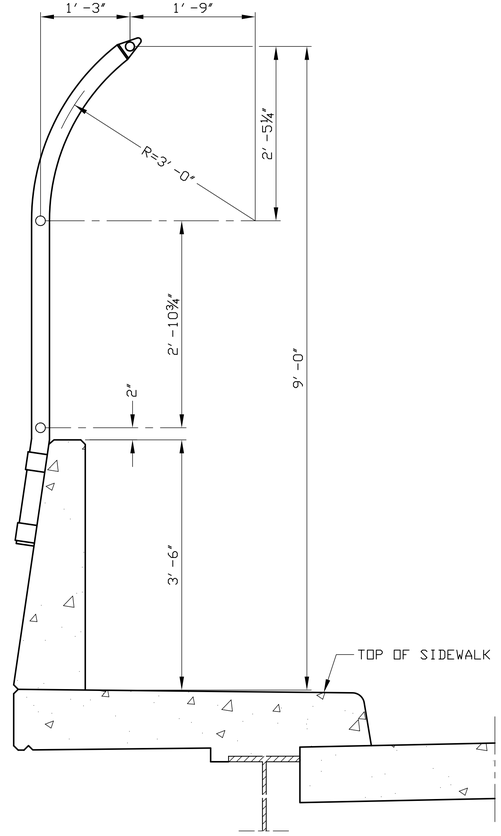

SECTION FOR PARAPET WITH SIDEWALK

SCALE: 1" = 1'-0"

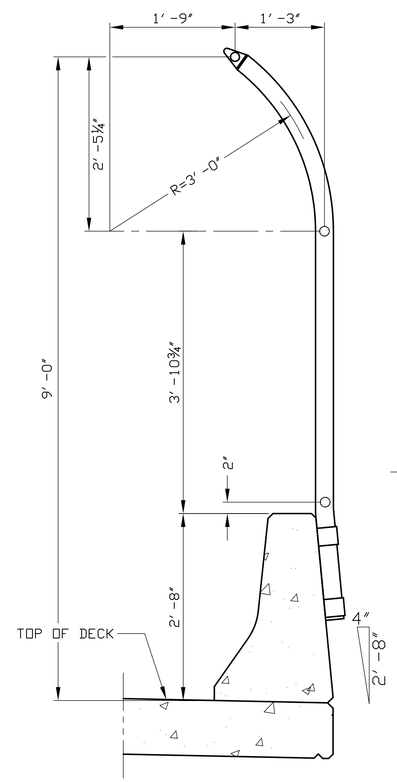

SECTION FOR PARAPET WITHOUT SIDEWALK

SCALE: 1" = 1'-0"

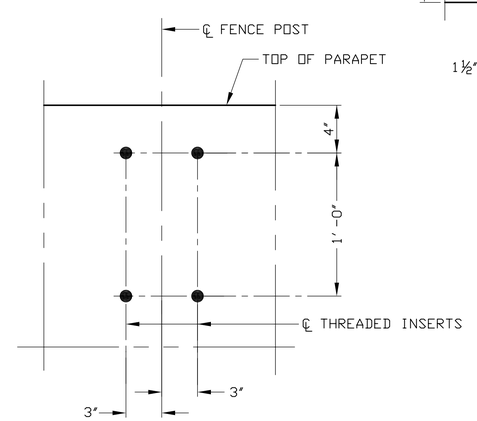

BOLT SETTING DETAIL

SCALE: 2" = 1'-0"

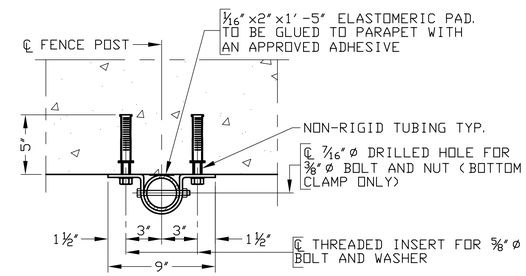

PLAN

SCALE: 2" = 1'-0"

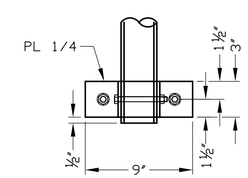

PIPE CLAMP DETAILS

SCALE: 2" = 1'-0"

No.	Description	Date
	Revisions	

COMMONWEALTH OF VIRGINIA
DEPARTMENT OF TRANSPORTATION

STRUCTURE AND BRIDGE DIVISION

PEDESTRIAN FENCE DETAILS

Designed: S&B DIV. JFG
Drawn: S&B DIV. JFG
Checked: S&B DIV. RWS

Date	Plan No.	Sheet No.
Jan. 20, 2004	BPF-1	12 OF 30

© 1993, Commonwealth of Virginia

07-01-93

BPF-1

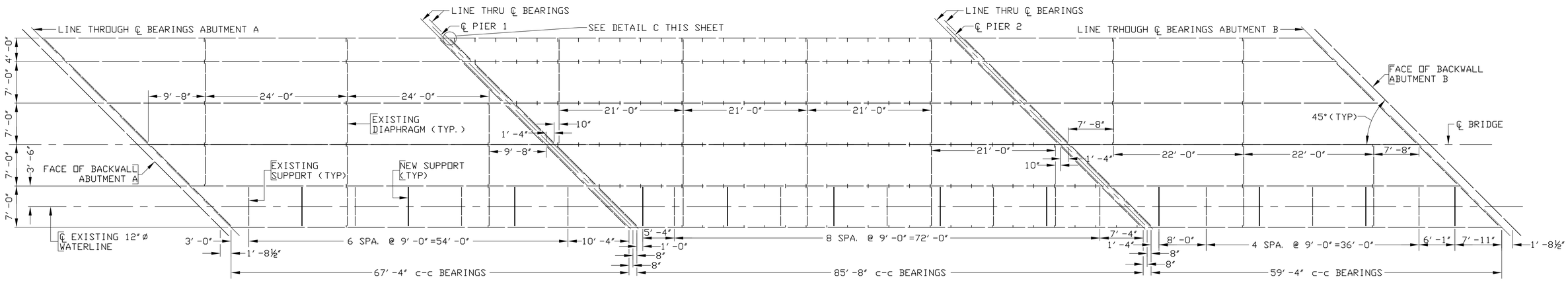

WATERLINE SUPPORTS

1/8" = 1'-0"

* - To be determined in field as directed by the Engineer.

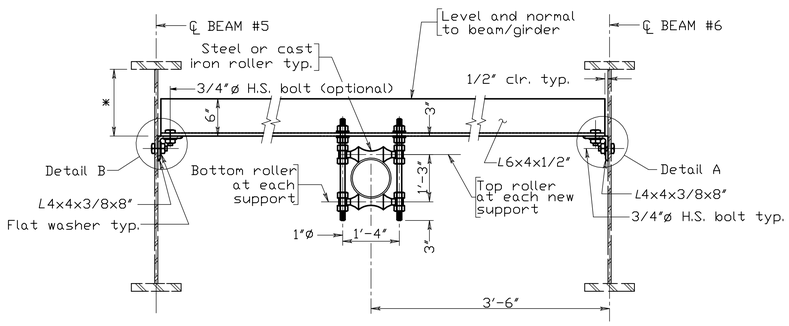

TYPICAL NEW SUPPORT DETAIL

Not to Scale

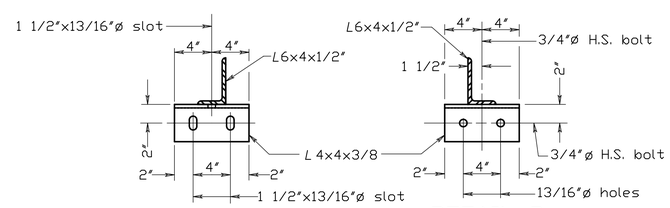

DETAIL A

Scale: 1 1/2" = 1'-0"

DETAIL B

Scale: 1 1/2" = 1'-0"

NOTE:

New Pipe support spacings may be adjusted up to 12" to allow proper installation.

Existing waterline shall be temporarily supported at each existing support angle to allow removal of the existing U-bolt and placement of the new roller support on existing angle all as approved by the Engineer. These new roller supports on existing angles shall be in place before raising existing beams.

All new pipe supports to be added between existing support angles shall be ASTM A709 Grade 36 and shall be added after all jacking of beams and substructure repairs have been made.

Galvanization - Miscellaneous hardware (angles, rods, etc.), unless otherwise specified, shall be galvanized.

Insulation ~~will~~ ___ will not X be required.

Payment - Waterline Supports shall be paid for on a Lump Sum basis, wherein no measurement shall be made, and shall be paid for at the contract lump sum price, which price shall include furnishing and installing hangers, rollers, rods and miscellaneous hardware; all as detailed on this sheet included herein and within the pay limits shown thereon. Such price shall be full compensation for furnishing all materials, labor, tools, equipment and incidentals necessary to complete the work.

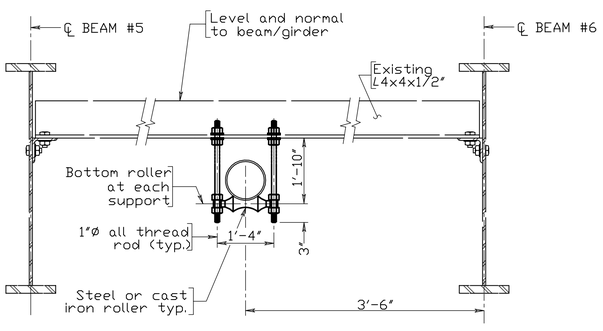

TYPICAL EXISTING SUPPORT ANGLE WITH NEW ROLLER SUPPORT

Not to Scale

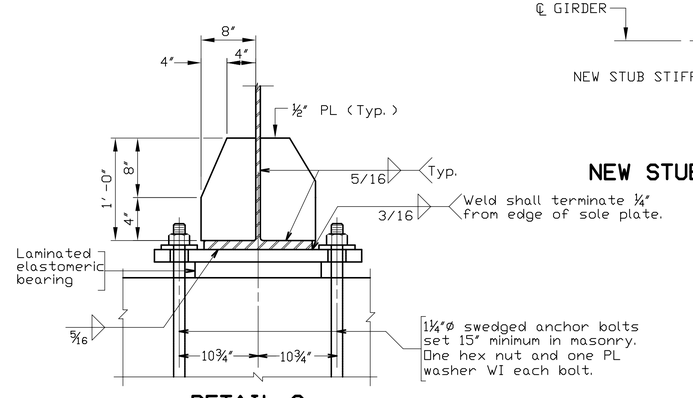

DETAIL C
SECTION AT GIRDER BEARING - SPAN B

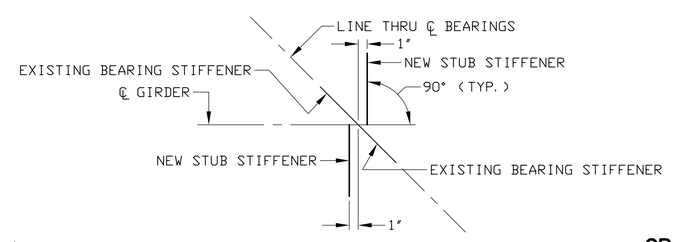

NEW STUB STIFFENER LAYOUT

NOT TO SCALE

CRANEHILL DRIVE OVER IVY CREEK WATERLINE SUPPORTS

COMMONWEALTH OF VIRGINIA
JAMES F. GRIZZLE, JR.
No. 35295
1-22-04
PROFESSIONAL ENGINEER

SCHWARTZ & ASSOCIATES, INC.
CONSULTING ENGINEERS
7331 TIMBERLAKE ROAD
LYNCHBURG, VA.

THE CITY OF LYNCHBURG, VIRGINIA
DEPT. OF PUBLIC WORKS
ENGINEERING

DESIGNED BY: JFG	DRAWN BY: JFG	CHECKED BY: RWS
SCALE: NONE		PROJECT NO.: 02021-B
COMM. NO. 03026	DATE: JANUARY 20, 2004	SHEET 13 OF 30

CADD REFERENCE NO. 02029.DWG

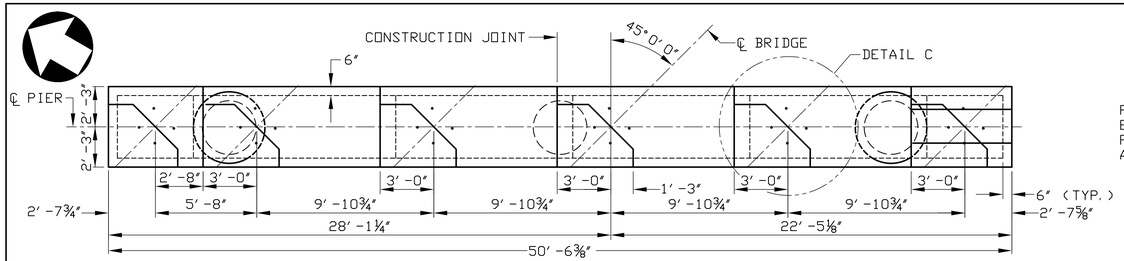

PLAN – PIER 1

1/4" = 1'-0"

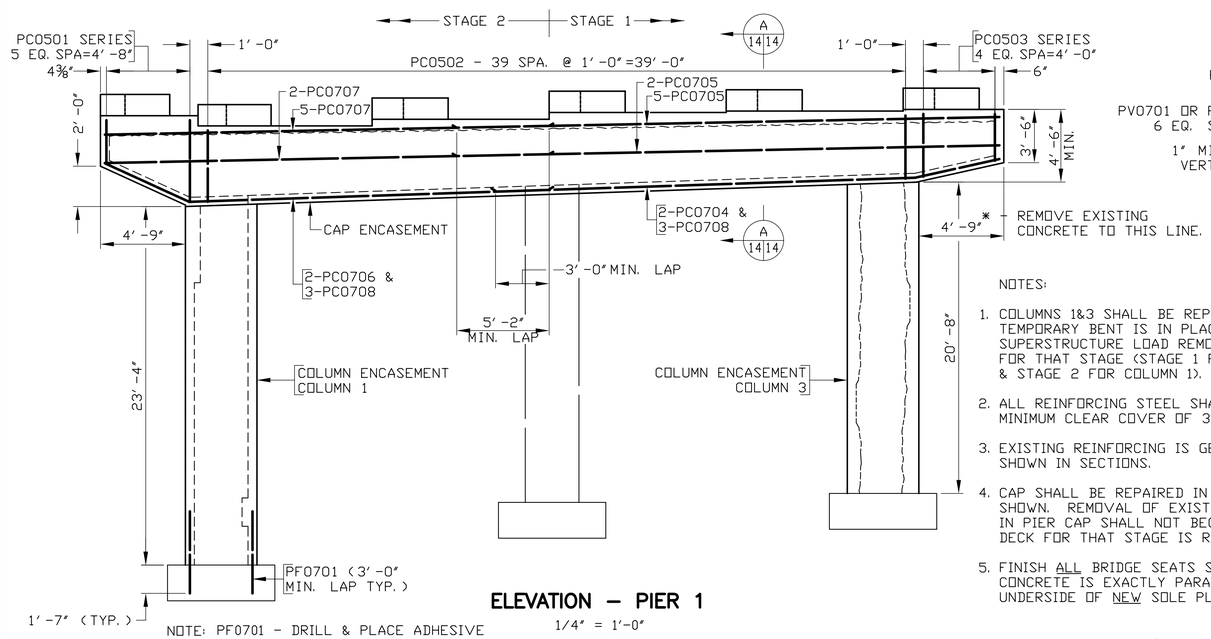

NOTE: PF0701 - DRILL & PLACE ADHESIVE ANCHOR INTO EXISTING CONCRETE FOOTINGS (TYP. FOOTING 1&3). TEST AS #6 ANCHOR.

ELEVATION – PIER 1

1/4" = 1'-0"

POSITION PV0701 AND PV0702 SO THAT 4 OF EACH FALLS OUTSIDE EXISTING CAP & DOES NOT REQUIRE CUTTING IN FIELD. 2 OF EACH THAT FALLS DIRECTLY BELOW EXISTING CAP WILL REQUIRE CUTTING IN FIELD AT BOTTOM OF EXISTING PIER CAP AFTER CONCRETE REMOVED.

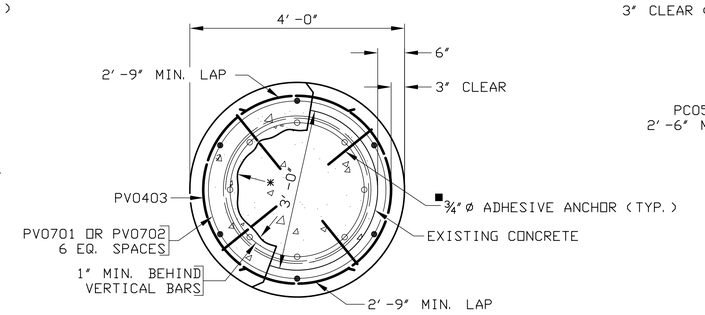

SECTION B–B

3/4" = 1'-0"

■ - ¾"ø ADHESIVE ANCHORS @ 2'-0" c-c. EMBED 6" INTO EXISTING CONCRETE AND 3" INTO NEW CONCRETE.

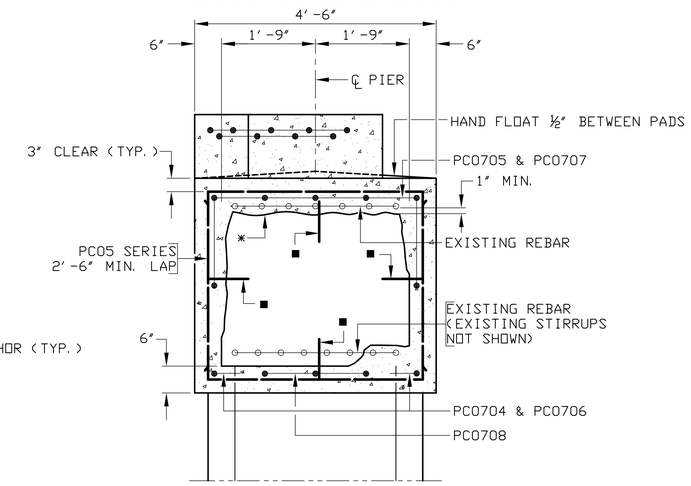

SECTION A 14 14

3/4" = 1'-0"

NOTES:

1. COLUMNS 1&3 SHALL BE REPAIRED WHILE TEMPORARY BENT IS IN PLACE & SUPERSTRUCTURE LOAD REMOVED FROM CAP FOR THAT STAGE (STAGE 1 FOR COLUMN 3 & STAGE 2 FOR COLUMN 1).
2. ALL REINFORCING STEEL SHALL HAVE A MINIMUM CLEAR COVER OF 3".
3. EXISTING REINFORCING IS GENERALLY ONLY SHOWN IN SECTIONS.
4. CAP SHALL BE REPAIRED IN 2 STAGES AS SHOWN. REMOVAL OF EXISTING CONCRETE IN PIER CAP SHALL NOT BEGIN UNTIL THE DECK FOR THAT STAGE IS REMOVED.
5. FINISH ALL BRIDGE SEATS SO THAT CONCRETE IS EXACTLY PARALLEL TO UNDERSIDE OF NEW SOLE PLATES.

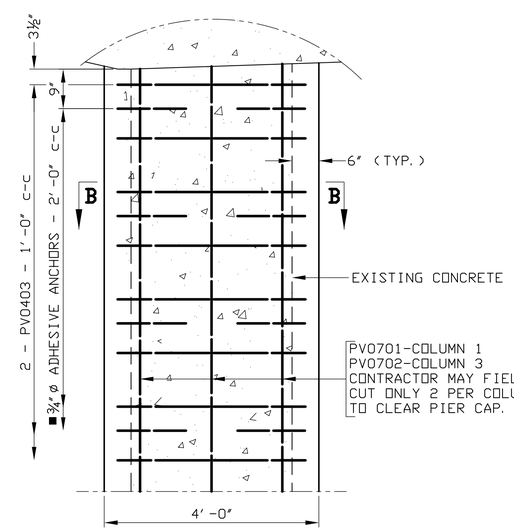

PARTIAL ELEVATION – COLUMN 1 & 3 ENCASEMENT

3/4" = 1'-0"

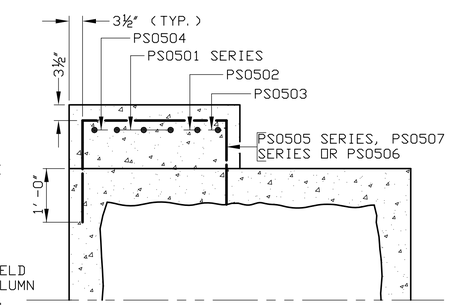

SECTION C 14 14

3/4" = 1'-0"

FOR SHOTCRETE - CLASS B NOTES, SEE SHEET 15.

ALL ANCHOR BOLT REPLACEMENTS SHALL BE COMPLETE PRIOR TO PLACEMENT OF CONCRETE FOR NEW SEATS.

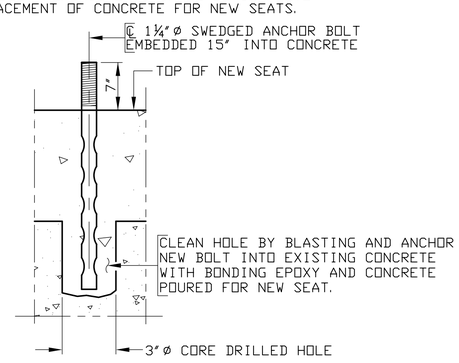

PART SECTION SHOWING ANCHOR BOLT REPLACEMENT DETAIL

NOT TO SCALE

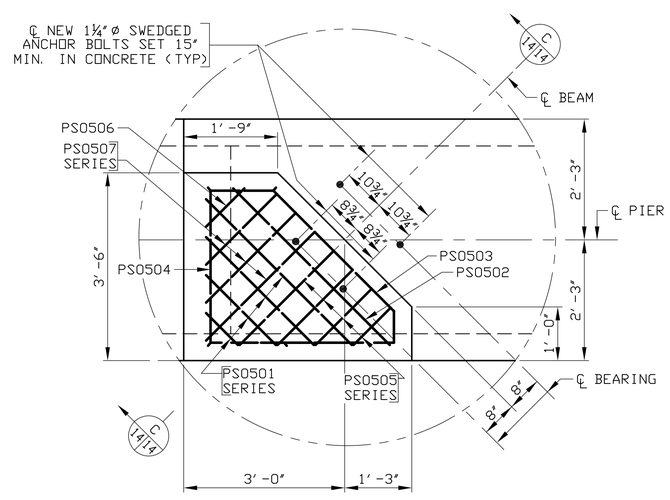

DETAIL C

3/4" = 1'-0"

(TYPICAL AT EACH PEDESTAL)

PIER 1 - SPAN a SEAT ELEVATIONS		PIER 1 - SPAN b SEAT ELEVATIONS	
BEAM	ELEVATIONS	BEAM	ELEVATIONS
1	597.71	1	596.59
2	597.13	2	596.01
3	597.50	3	596.39
4	597.88	4	596.76
5	597.96	5	596.84
6	598.04	6	596.93

COMMONWEALTH OF VIRGINIA
James F. Grizzle Jr.
JAMES F. GRIZZLE, JR.
No. 35295
1-22-04
PROFESSIONAL ENGINEER

COMM. NO. 03026

CRANEHILL DRIVE OVER IVY CREEK
PIER 1

SCHWARTZ & ASSOCIATES, INC.
CONSULTING ENGINEERS
7331 TIMBERLAKE ROAD
LYNCHBURG, VA.

THE CITY OF LYNCHBURG, VIRGINIA
DEPT. OF PUBLIC WORKS
ENGINEERING

DESIGNED BY: JFG	DRAWN BY: JFG	CHECKED BY: RWS
SCALE: NONE		PROJECT NO.: 02021-B
DATE: JANUARY 20, 2004		SHEET 14 OF 30

CADD REFERENCE NO. 02029.DWG

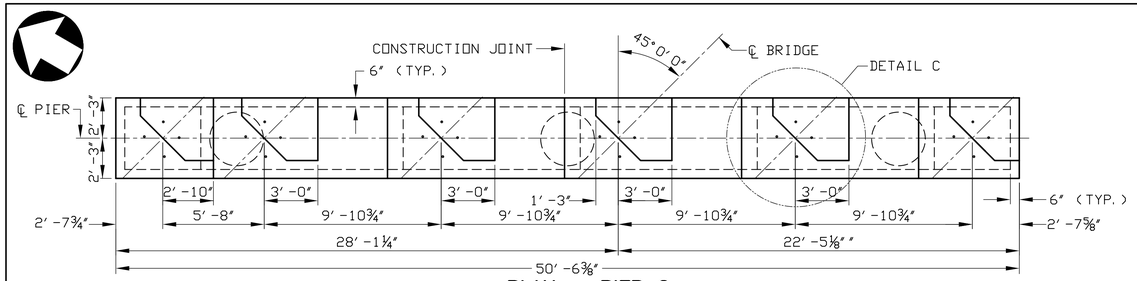

PLAN – PIER 2

1/4" = 1'-0"

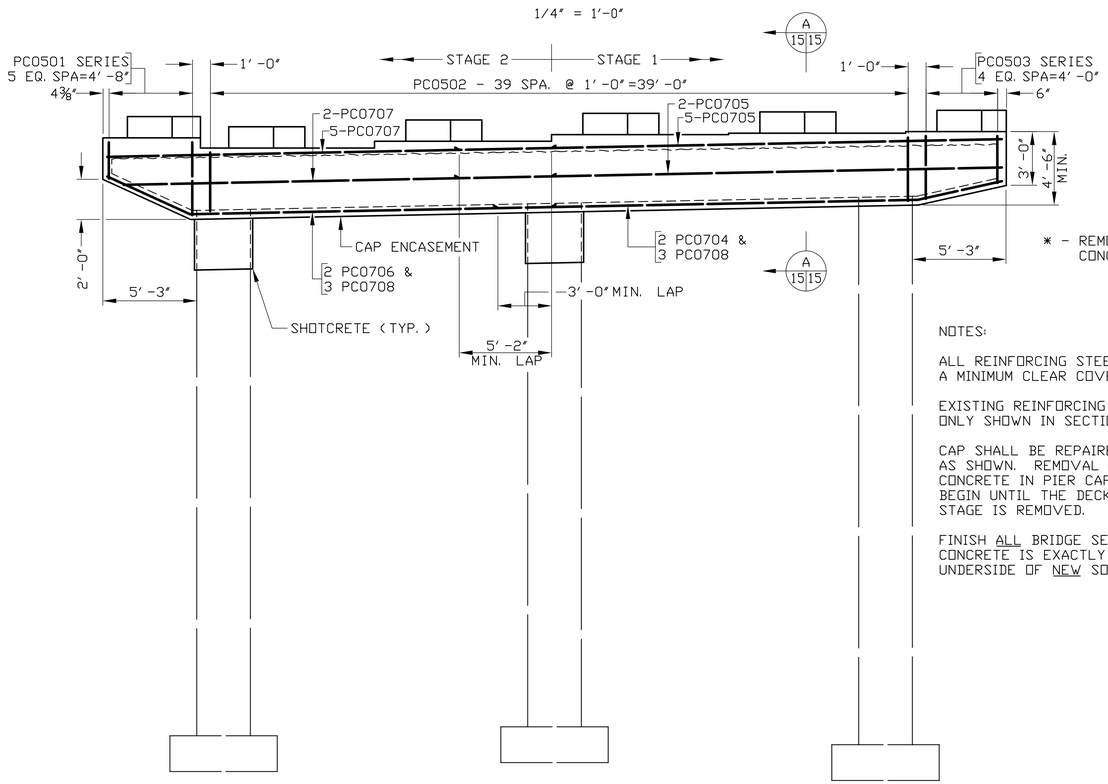

ELEVATION – PIER 2

1/4" = 1'-0"

■ - ¾"Ø ADHESIVE ANCHORS @ 2'-0" c-c. EMBED 6" INTO EXISTING CONCRETE AND 3" INTO NEW CONCRETE.

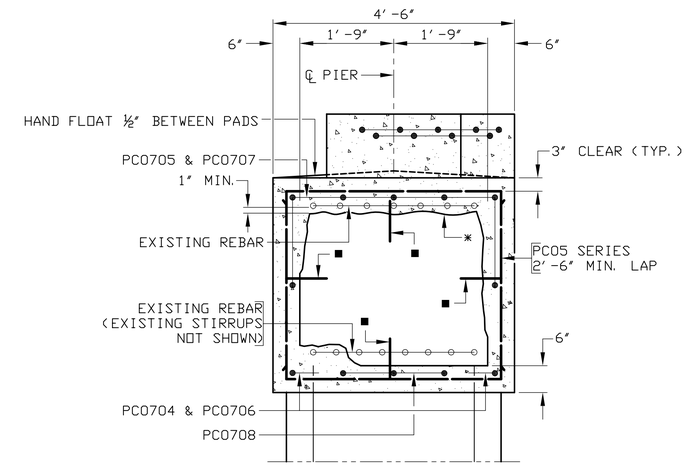

SECTION A 15 15

3/4" = 1'-0"

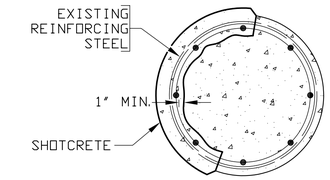

SECTION B–B

3/4" = 1'-0"

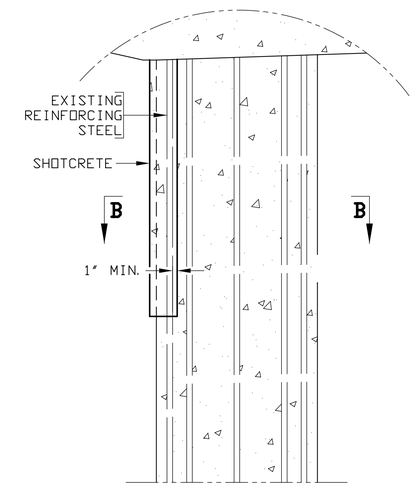

PARTIAL STEM ELEVATION

3/4" = 1'-0"

* - REMOVE EXISTING CONCRETE TO THIS LINE.

NOTES:

ALL REINFORCING STEEL SHALL HAVE A MINIMUM CLEAR COVER OF 3".

EXISTING REINFORCING IS GENERALLY ONLY SHOWN IN SECTIONS.

CAP SHALL BE REPAIRED IN 2 STAGES AS SHOWN. REMOVAL OF EXISTING CONCRETE IN PIER CAP SHALL NOT BEGIN UNTIL THE DECK FOR THAT STAGE IS REMOVED.

FINISH ALL BRIDGE SEATS SO THAT CONCRETE IS EXACTLY PARALLEL TO UNDERSIDE OF NEW SOLE PLATES.

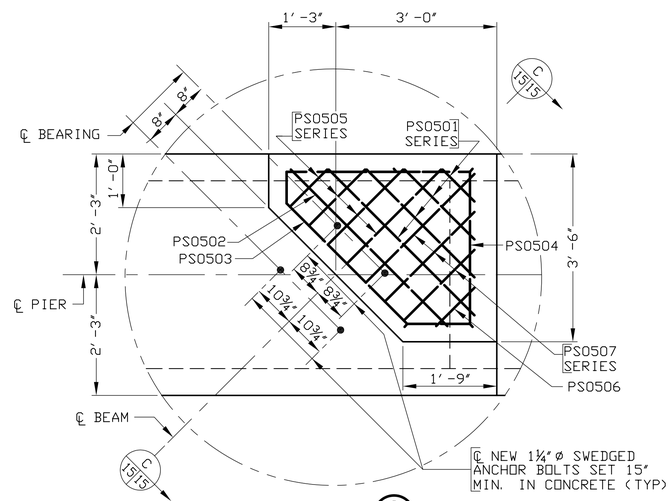

DETAIL C 15 15

3/4" = 1'-0"

SHOTCRETE - CLASS B:

LOCATIONS OF "SHOTCRETE CLASS B" WILL BE DETERMINED IN FIELD BY THE ENGINEER.

SHOTCRETE SHALL BE USED TO COVER EXPOSED REINFORCING STEEL IN AREAS WHERE REINFORCING STEEL IS CORRODED, AND OTHER AREAS OF CONCRETE DETERIORATION, AS DIRECTED BY THE ENGINEER.

ALL COLUMN PATCHING ON PIER 2 SHALL BE DONE WITH SHOTCRETE UNLESS OTHERWISE APPROVED BY THE ENGINEER.

REMOVE EXISTING CONCRETE TO SOUND CONCRETE AND IN AREAS OF CORRODED REINFORCING, AS DIRECTED BY THE ENGINEER, TAKING CARE NOT TO DAMAGE ANY EXISTING REINFORCING STEEL. SANDBLAST EXPOSED REINFORCING STEEL AND FACES OF EXISTING CONCRETE THAT WILL CONTACT THE PNEUMATIC MORTAR.

THERE SHALL BE A MINIMUM CLEAR COVER OF 3" ON ALL EXPOSED REINFORCING STEEL.

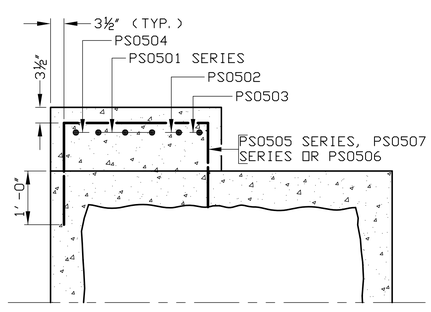

SECTION C 15 15

3/4" = 1'-0"

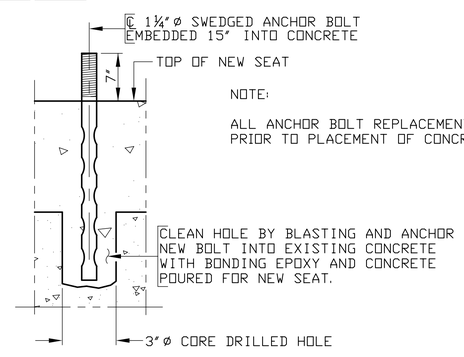

NOTE:

ALL ANCHOR BOLT REPLACEMENTS SHALL BE COMPLETE PRIOR TO PLACEMENT OF CONCRETE FOR NEW SEATS.

PART SECTION SHOWING ANCHOR BOLT REPLACEMENT DETAIL

NOT TO SCALE

PIER 2 - SPAN b SEAT ELEVATIONS	
BEAM	ELEVATIONS
1	599.39
2	598.81
3	599.19
4	599.56
5	599.65
6	599.73

PIER 2 - SPAN c SEAT ELEVATIONS	
BEAM	ELEVATIONS
1	600.59
2	600.01
3	600.39
4	600.76
5	600.84
6	600.93

COMMONWEALTH OF VIRGINIA
JAMES F. GRIZZLE, JR.
No. 35295
1-22-04
PROFESSIONAL ENGINEER

COMM. NO. 03026

SCHWARTZ & ASSOCIATES, INC.
CONSULTING ENGINEERS

7331 TIMBERLAKE ROAD
LYNCHBURG, VA.

THE CITY OF LYNCHBURG, VIRGINIA
DEPT. OF PUBLIC WORKS
ENGINEERING

DESIGNED BY: JFG	DRAWN BY: JFG	CHECKED BY: RWS
SCALE: NONE	PROJECT NO.: 02021-B	
DATE: JANUARY 20, 2004	SHEET 15 OF 30	

CRANEHILL DRIVE OVER IVY CREEK
PIER 2

CADD REFERENCE NO. 02029.DWG

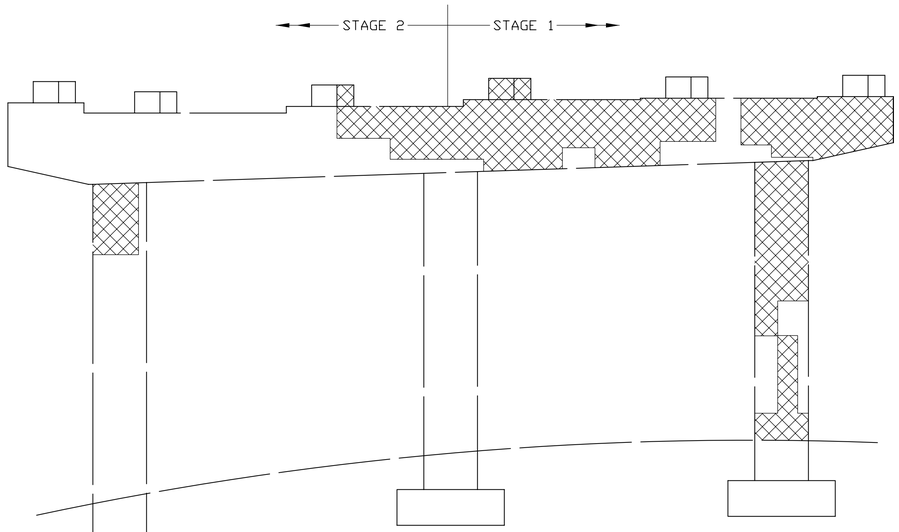

PIER 1 ELEVATION LOOKING EAST
1/4" = 1'-0"

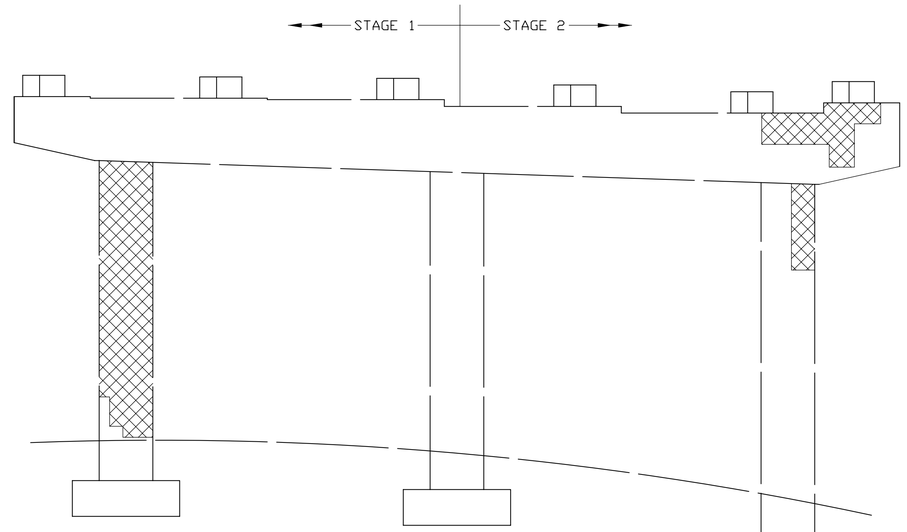

PIER 1 ELEVATION LOOKING WEST
1/4" = 1'-0"

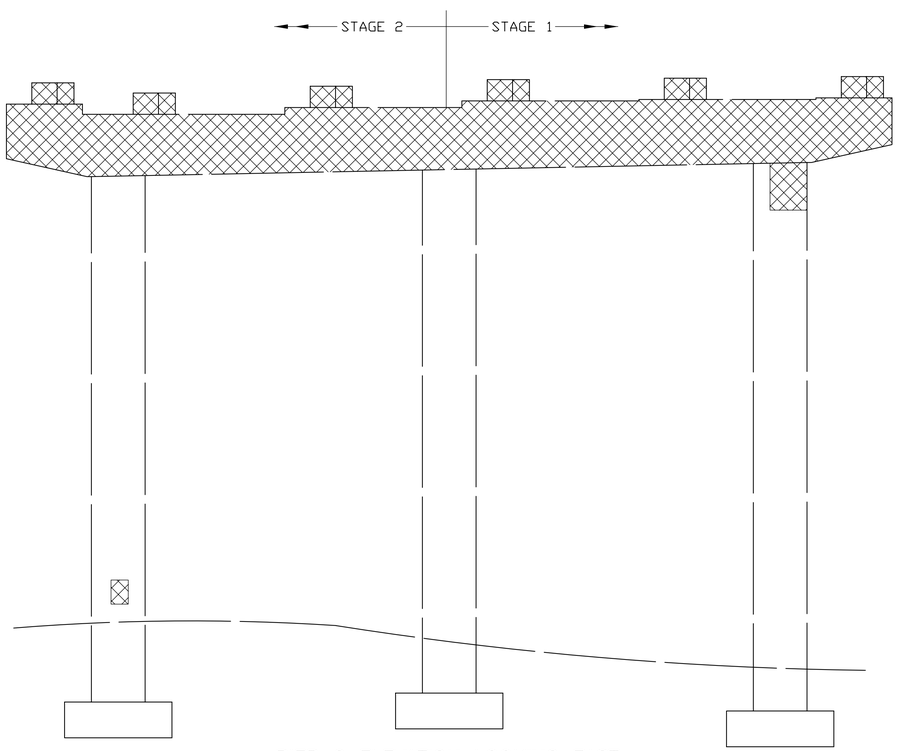

PIER 2 ELEVATION LOOKING EAST
1/4" = 1'-0"

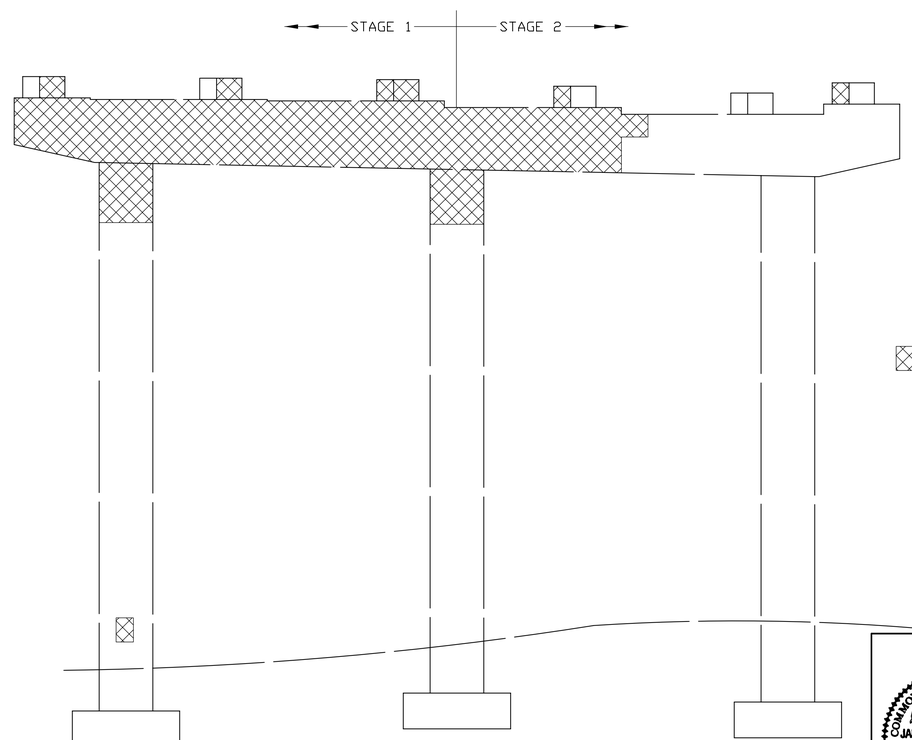

PIER 2 ELEVATION LOOKING WEST
1/4" = 1'-0"

- DENOTES AREAS OF DELAMINATED CONCRETE.
SEE SHEETS 14 & 15 FOR PIER REPAIR DETAILS.

CRANEHILL DRIVE OVER IVY CREEK
PIER 1 & 2 DETERIORATED AREAS

COMMONWEALTH OF VIRGINIA
JAMES F. GRIZZLE, JR.
No. 35295
1-22-04
PROFESSIONAL ENGINEER

SCHWARTZ & ASSOCIATES, INC.
CONSULTING ENGINEERS

7331 TIMBERLAKE ROAD
LYNCHBURG, VA.

THE CITY OF LYNCHBURG, VIRGINIA
DEPT. OF PUBLIC WORKS
ENGINEERING

DESIGNED BY: JFG	DRAWN BY: JFG	CHECKED BY: RWS
SCALE: NONE		PROJECT NO.: 02021-B
COMM. NO. 03026	DATE: JANUARY 20, 2004	SHEET 16 OF 30

CADD REFERENCE NO. 02029.DWG

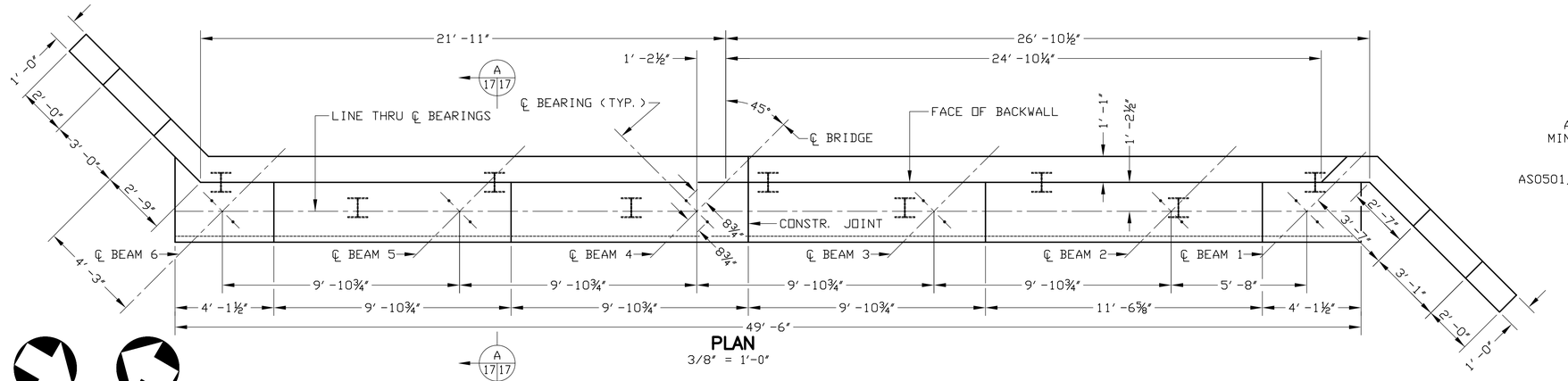

PLAN

3/8″ = 1′-0″

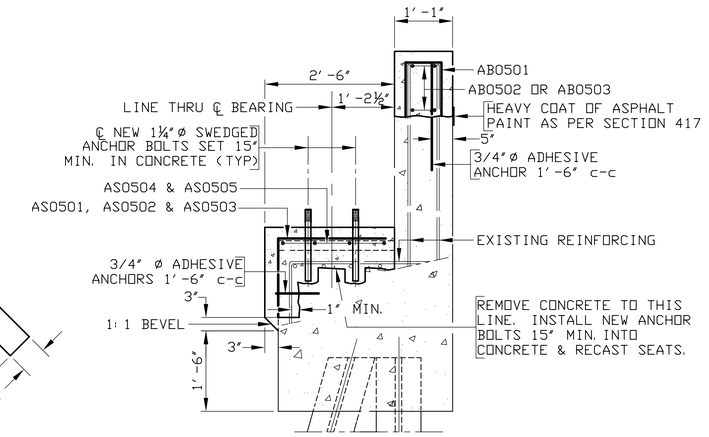

SECTION A 17 17

3/4″ = 1′-0″

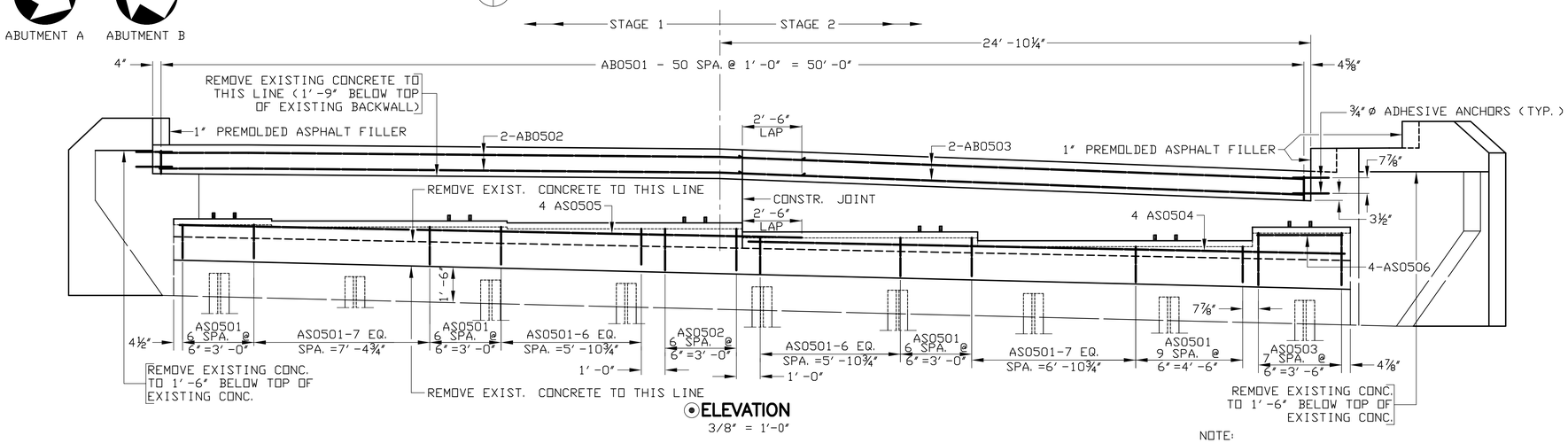

⊙ELEVATION

3/8″ = 1′-0″

⊙ABUTMENT A AS SHOWN
ABUTMENT B OPPOSITE HAND

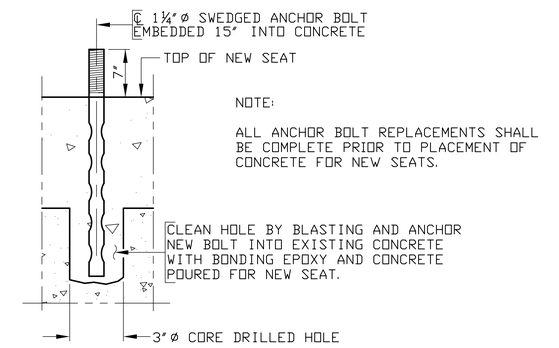

PART SECTION SHOWING ANCHOR BOLT REPLACEMENT DETAIL

NOT TO SCALE

✱✱-REMOVE EXISTING CONCRETE TO THIS LINE.

✱-REMOVE EXISTING CONCRETE TO 1″ DEPTH.

◆-1″ PREMOLDED ASPHALT FILLER

NOTE:

ELEVATIONS SHOWN ARE ALONG BACK FACE OF BACKWALL. ELEVATIONS ON FRONT FACE MEASURED PARALLEL TO CENTERLINE BRIDGE ARE 0.05′ HIGHER ON ABUTMENT A AND 0.05′ LOWER ON ABUTMENT B.

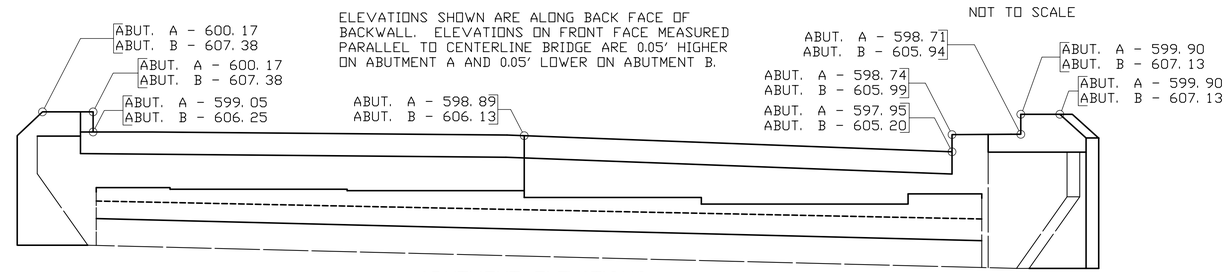

ABUTMENT ELEVATIONS

NOT TO SCALE

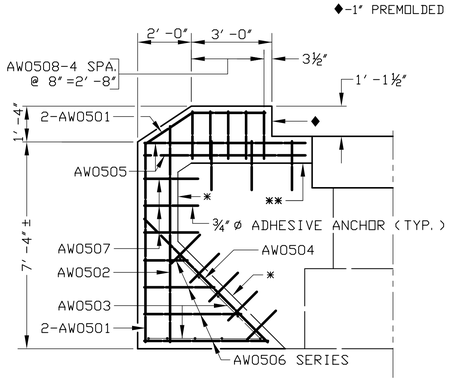

⊙ELEVATION AT DOWNSTREAM WING

NOT TO SCALE

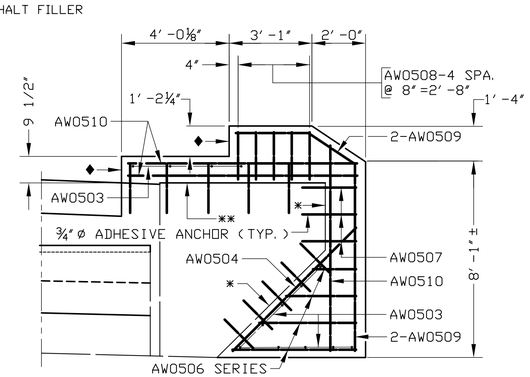

⊙ELEVATION AT UPSTREAM WING

NOT TO SCALE

ABUTMENT A SEAT ELEVATIONS		ABUTMENT B SEAT ELEVATIONS	
BEAM	ELEVATIONS	BEAM	ELEVATIONS
1	595.51	1	602.53
2	594.92	2	601.95
3	595.30	3	602.33
4	595.67	4	602.70
5	595.76	5	602.78
6	595.84	6	602.87

COMMONWEALTH OF VIRGINIA
JAMES F. GRIZZLE, JR.
No. 35295
1-22-04
PROFESSIONAL ENGINEER

SCHWARTZ & ASSOCIATES, INC.
CONSULTING ENGINEERS

7331 TIMBERLAKE ROAD
LYNCHBURG, VA.

THE CITY OF LYNCHBURG, VIRGINIA
DEPT. OF PUBLIC WORKS
ENGINEERING

CRANEHILL DRIVE OVER IVY CREEK ABUTMENT REPAIRS

DESIGNED BY: JFG	DRAWN BY: JFG	CHECKED BY: RWS
SCALE: NONE	PROJECT NO.: 02021-B	
COMM. NO. 03026	DATE: JANUARY 20, 2004	SHEET 17 OF 30

CADD REFERENCE NO. 02029.DWG

REINFORCING STEEL SCHEDULE

SUPERSTRUCTURE (COATED)

MARK	NO.	LENGTH	PIN Ø	LOCATION
SB0501	80	18'-9 1/4"	3 1/8"	DECK - TRANS. STAGE 1
SB0502	80	17'-10 1/4"	3 1/8"	DECK - TRANS. STAGE 2
SC0501	294	17'-9"	-	DECK - TRANSVERSE
SC0502	42	17'-9" TO 2'-10"	-	DECK - TRANSVERSE
SC0503	120	15'-1" TO 10"	-	DECK - TRANSVERSE
SC0504	282	17'-1"	-	DECK - TRANSVERSE
SC0505	138	17'-1" TO 11"	-	DECK - TRANSVERSE
SC0506	132	16'-8" TO 9"	-	DECK - TRANSVERSE
SC0507	4	22'-6"	-	DECK SLAB ENDS
SC0508	6	25'-5"	-	DECK SLAB ENDS
SC0509	12	24'-3"	-	DECK SLAB ENDS
SC0510	88	17'-9" TO 2'-2"	-	DECK - TRANSVERSE
SC0511	291	6'-7"	3 1/8"	DECK OVERHANG
SC0512	2	21'-6"	-	DECK SLAB @ ABUT. B
SD0501	28	4'-4"	3 1/8"	DECK - AT DECK DRAINS
SE0401	80	4'-3"	2"	END OF DECK SLAB
SL0501	140	36'-6"	-	DECK - LONGITUDINAL
SL0502	140	44'-5"	-	DECK - LONGITUDINAL
SL0503	140	32'-6"	-	DECK - LONGITUDINAL
SW0501	292	4'-5"	-	SIDEWALK
SW0702	292	7'-8"	3 7/8"	DECK & SIDEWALK
SW0503	281	2'-4"	3 1/8"	DECK & SIDEWALK
SW0404	20	36'-8"	-	SIDEWALK - LONGITUDINAL
SW0405	20	44'-7"	-	SIDEWALK - LONGITUDINAL
SW0406	20	33'-8"	-	SIDEWALK - LONGITUDINAL

ABUTMENTS A & B (COATED)

MARK	NO.	LENGTH	PIN Ø	LOCATION
AB0501	102	2'-3 1/2"	2 1/2"	BACKWALL
AB0502	8	27'-2"	-	BACKWALL
AB0503	8	23'-7"	-	BACKWALL
AS0501	110	3'-4 3/4"	2 1/2"	SEATS
AS0502	14	3'-8 3/4"	2 1/2"	SEATS
AS0503	16	4'-1 3/4"	2 1/2"	SEATS
AS0504	8	25'-3"	-	SEATS
AS0505	8	26'-2"	-	SEATS
AS0506	8	3'-7"	-	SEATS
AW0501	4	11'-7"	2 1/2"	WINGS
AW0502	2	15'-6"	2 1/2"	WINGS
AW0503	48	5 1/2"	-	WINGS
AW0504	4	13'-0"	2 1/2"	WINGS
AW0505	4	12'-0"	2 1/2"	WINGS
AW0506	16	3'-4" TO 9'-4"	2 1/2"	WINGS
AW0507	12	2'-6"	2 1/2"	WINGS
AW0508	20	3'-8"	2 1/2"	WINGS
AW0509	4	12'-3"	2 1/2"	WINGS
AW0510	6	17'-0"	2 1/2"	WINGS

PIERS (COATED)

MARK	NO.	LENGTH	PIN Ø	LOCATION
PC0501	24	8'-7" TO 10'-7"	2 1/2"	PIER CAP
PC0502	160	10'-9"	2 1/2"	PIER CAP
PC0503	20	8'-8" TO 9'-4"	2 1/2"	PIER CAP
PC0704	4	28'-11"	5 1/4"	PIER CAP
PC0705	14	31'-10"	-	PIER CAP
PC0706	4	24'-5"	5 1/4"	PIER CAP
PC0707	14	24'-5"	-	PIER CAP
PC0708	12	16'-0"	-	PIER CAP
PF0701	12	4'-10"	-	PIER FOOTING
PS0501	48	3'-9" TO 6'-9"	2 1/2"	PIER SEAT
PS0502	12	7'-5"	2 1/2"	PIER SEAT
PS0503	12	8'-1 1/2"	2 1/2"	PIER SEAT
PS0504	12	4'-9"	2 1/2"	PIER SEAT
PS0505	48	4'-4" TO 5'-10"	2 1/2"	PIER SEAT
PS0506	12	4'-0"	2 1/2"	PIER SEAT
PS0507	36	4'-8" TO 5'-8"	2 1/2"	PIER SEAT
PV0701	6	26'-4"	-	PIER COLUMN
PV0702	6	23'-8"	-	PIER COLUMN
PV0403	90	8'-5"	3'-4"	PIER COLUMN

NOTE: DIMENSIONS SHOWN IN BENDING DIAGRAM ARE OUT-TO-OUT OF BARS UNLESS OTHERWISE NOTED.

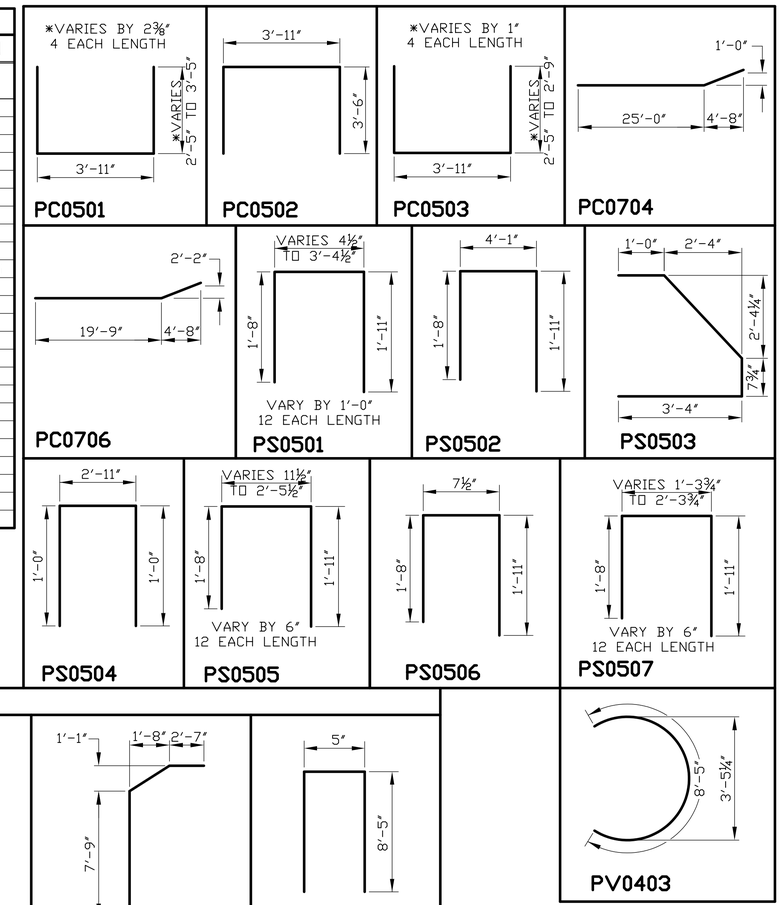

BENDING DIAGRAM

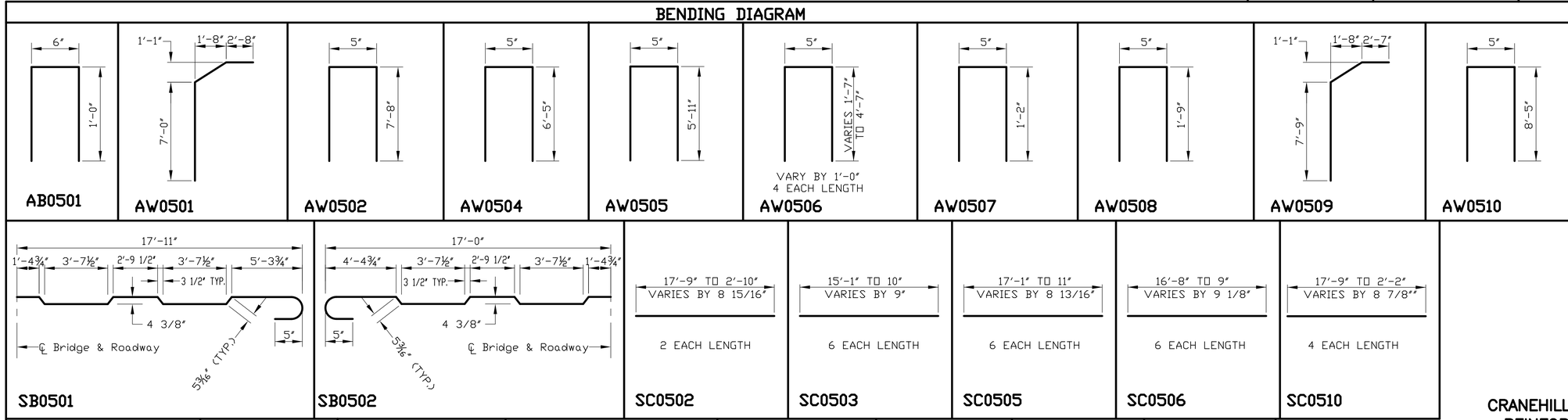

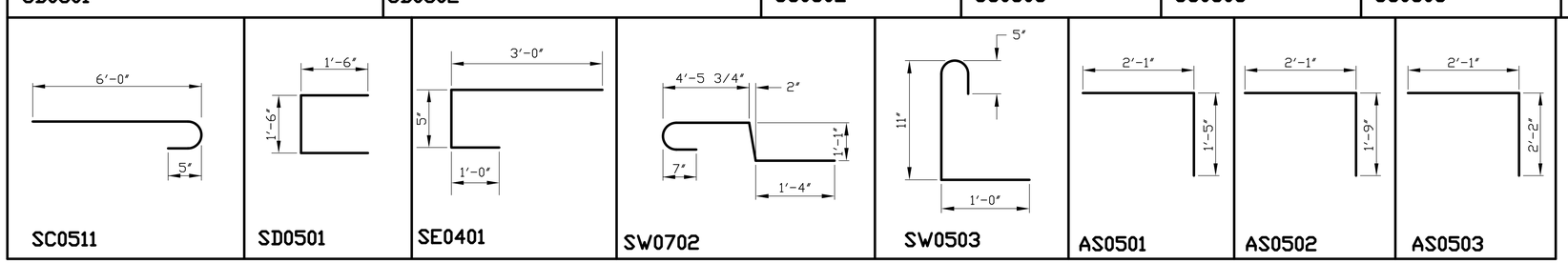

CRANEHILL DRIVE OVER IVY CREEK
REINFORCING STEEL SCHEDULE

COMMONWEALTH OF VIRGINIA
JAMES F. GRIZZLE, JR.
No. 35295
1-22-04
PROFESSIONAL ENGINEER

SCHWARTZ & ASSOCIATES, INC.
CONSULTING ENGINEERS
7331 TIMBERLAKE ROAD
LYNCHBURG, VA.

THE CITY OF LYNCHBURG, VIRGINIA
DEPT. OF PUBLIC WORKS
ENGINEERING

DESIGNED BY: JFG	DRAWN BY: JFG	CHECKED BY: RWS
SCALE: NONE		PROJECT NO.: 02021-B
COMM. NO. 03026	DATE: JANUARY 20, 2004	SHEET 18 OF 30

CADD REFERENCE NO. 02029.DWG

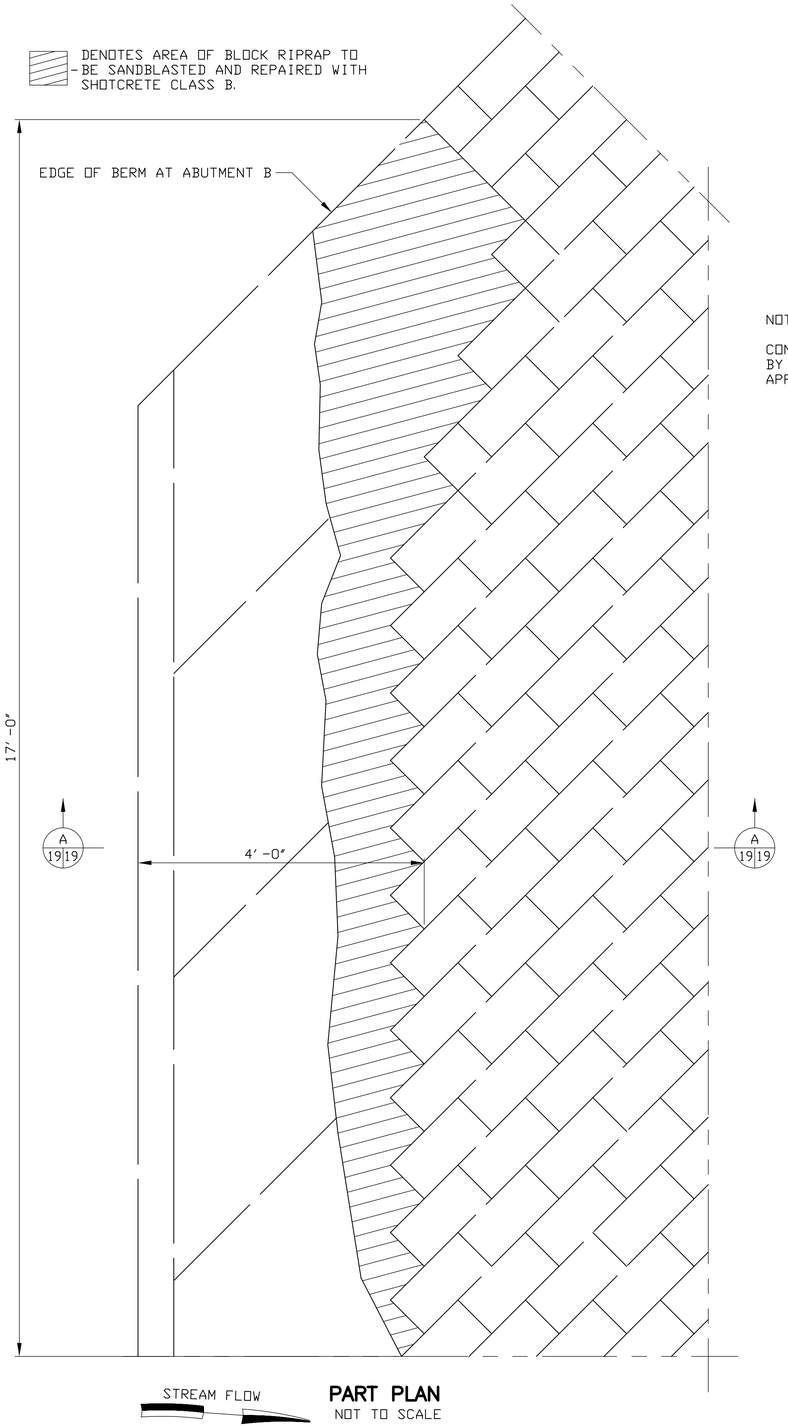

PART PLAN
NOT TO SCALE

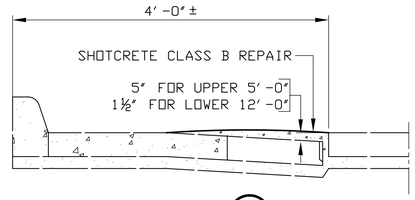

SECTION A 19 19
NOT TO SCALE

NOTE:

CONTRACTOR SHALL REMOVE ALL LOOSE MATERIAL BY BLOWING WITH COMPRESSED AIR BEFORE APPLICATION OF SHOTCRETE CLASS B.

SEQUENCE OF OPERATIONS

I. ERECT ALL CONSTRUCTION SIGNS AND TRAFFIC POLES AND SIGNALS.

II. JACKING AND BLOCKING

A) TEMPORARILY SUPPORT EXISTING WATERLINE, REMOVE U-BOLTS AND INSTALL NEW ROLLER SUPPORTS ON EXISTING ANGLES.

B) STOP TRAFFIC FOR NO MORE THAN 5 MINUTES. PLACE 1" THICK PLYWOOD FOR THE FULL LANE WIDTH ON THE DOWNSTREAM SIDE AT ABUTMENT A. PLYWOOD SHOULD BE ADJACENT TO THE END OF THE EXISTING DECK SLAB AND EXTEND 12' FROM THE END OF THE DECK AND ANCHORED TO WEARING SURFACE.

C) PLACE TRAFFIC ON DOWNSTREAM SIDE OF STRUCTURE.

D) STOP TRAFFIC. SIMULTANEOUSLY JACK ALL 6 BEAMS AT ABUTMENT A UP TO 2" AND TIGHTEN LOCK NUTS ON JACKS. CONTRACTOR HALL LOOSEN WATERLINE HANGERS DURING JACKING OPERATIONS; HOWEVER HANGERS SHALL BE KEPT SNUG AT ALL TIMES. ALLOW TRAFFIC TO FLOW AGAIN.

E) STOP TRAFFIC. PLACE 1" THICK PLYWOOD OVER PREVIOUS LAYER OF PLYWOOD, (ANCHORED TO IT) EXTENDING OUT 4' FROM THE END OF THE DECK CREATING A RAMP. ALLOW TRAFFIC TO FLOW AGAIN.

F) SIMULTANEOUSLY JACK ALL 6 BEAMS UP AN ADDITIONAL 1 1/2" AND PLACE 2 - 1 1/2" THICK STEEL SHIM PLATES UNDER EACH BEAM. LOWER BEAMS ONTO SHIMS. ALLOW TRAFFIC TO FLOW AGAIN.

G) MOVE JACKING OPERATION TO PIER 1.

H) STOP TRAFFIC. SIMULTANEOUSLY JACK ALL 12 BEAMS AT PIER 1 UP TO 2" AND TIGHTEN LOCK NUTS ON JACKS. ALLOW TRAFFIC TO FLOW AGAIN.

I) STOP TRAFFIC. SIMULTANEOUSLY JACK ALL 12 BEAMS UP AN ADDITIONAL 1 1/2" AND PLACE 2 - 1 1/2" THICK STEEL SHIM PLATES UNDER EACH BEAM. LOWER BEAMS ONTO SHIMS. ALLOW TRAFFIC TO FLOW AGAIN.

J) MOVE JACKING OPERATION TO PIER 2 AND REPEAT THE PROCEDURE FOR PIER 1.

K) MOVE JACKING OPERATION TO ABUTMENT B AND REPEAT THE PROCEDURE FOR ABUTMENT A.

L) PAVE AN ASPHALT RAMP ON THE UPSTREAM ROADWAY ADJACENT TO ABUTMENT A & B BACKWALL TO MATCH TOP OF EXISTING DECK.

III. BEGIN STAGE 1 CONSTRUCTION

A) INSTALL TRAFFIC BARRIER SERVICE CONCRETE PARAPET.

B) MOVE TRAFFIC TO UPSTREAM ROADWAY.

C) REMOVE SUPERSTRUCTURE CONCRETE ON STAGE 1 SIDE.

D) SUPPORT BEAMS ON STAGE 1 SIDE FROM GROUND WITH A TEMPORARY SUPPORT SYSTEM.

E) ENCASE PIER STEM AND ADD NEW STUB STIFFENERS IN SPAN B AND NEW SOLE PLATES TO ALL BEAMS.

F) SHOTCRETE STEMS NOT REQUIRING ENCASEMENT.

G) ENCASE PIER CAPS AND CAST ABUTMENT CONCRETE.

H) PLACE ELASTOMERIC BEARING PADS AND LOWER BEAMS ONTO NEW BEARING PADS.

I) CAST DECK AND PARAPET.

J) COMPLETE ALL STAGE 1 ROADWAY ITEMS.

IV. BEGIN STAGE 2 CONSTRUCTION

A) MOVE TRAFFIC TO DOWNSTREAM ROADWAY.

B) MOVE TRAFFIC BARRIER SERVICE CONCRETE PARAPET.

C) REPEAT STEPS C THROUGH I OF STAGE 1 FOR STAGE 2 WORK AND INCLUDING CASTING OF SIDEWALK.

D) SEAL EXPANSION JOINTS AT PIERS.

E) CLEAN AND PAINT STRUCTURAL STEEL.

F) COMPLETE BRIDGE DECK GROOVING.

G) COMPLETE WATERPROOFING CLASS III.

H) COMPLETE ALL OTHER ITEMS OF WORK ON BRIDGE.

I) COMPLETE ALL ROADWAY ITEMS FOR STAGE 2.

J) REMOVE ALL TEMPORARY TRAFFIC CONTROLS AND OPEN BRIDGE FULLY.

UNLESS OTHERWISE APPROVED OR DIRECTED (IN WRITING), THE CONTRACTOR SHALL PLAN AND PROSECUTE THE WORK IN ACCORDANCE WITH THE ABOVE NOTED SEQUENCE OF OPERATIONS.

CRANEHILL DRIVE OVER IVY CREEK
RIPRAP REPAIRS &
SEQUENCE OF OPERATIONS

COMMONWEALTH OF VIRGINIA
JAMES F. GRIZZLE, JR.
No. 35295
1-22-04
PROFESSIONAL ENGINEER

COMM. NO. 03026

SCHWARTZ & ASSOCIATES, INC.
CONSULTING ENGINEERS

7331 TIMBERLAKE ROAD
LYNCHBURG, VA.

THE CITY OF LYNCHBURG, VIRGINIA
DEPT. OF PUBLIC WORKS
ENGINEERING

DESIGNED BY: JFG	DRAWN BY: JFG	CHECKED BY: RWS
SCALE: NONE		PROJECT NO.: 02021-B
DATE: JANUARY 20, 2004		SHEET 19 OF 30

CADD REFERENCE NO. 02029.DWG

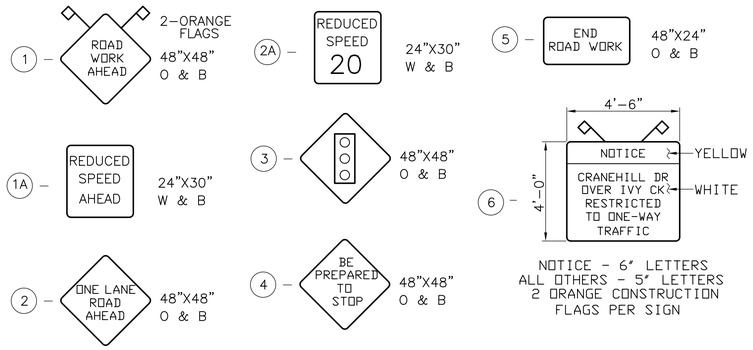

NOTICE – 6" LETTERS
ALL OTHERS – 5" LETTERS
2 ORANGE CONSTRUCTION
FLAGS PER SIGN

– DENOTES SIGNS

O & B = ORANGE & BLACK
W & B = WHITE & BLACK

NOTE:

A 12'–0" CLEAR ROADWAY SHALL BE MAINTAINED AT ALL TIMES THROUGHOUT PROJECT.

ALL SIGN SIZES SHALL BE IN ACCORDANCE WITH CURRENT EDITION OF THE VA. WORK AREA PROTECTION MANUAL & M.U.T.C.D MANUAL.

6 PLACE THIS SIGN AT THE INTERSECTION OF VASSAR STREET AND LANGHORNE ROAD.

PLACE THIS SIGN AT THE INTERSECTION OF LINK ROAD AND CRANEHILL DRIVE.

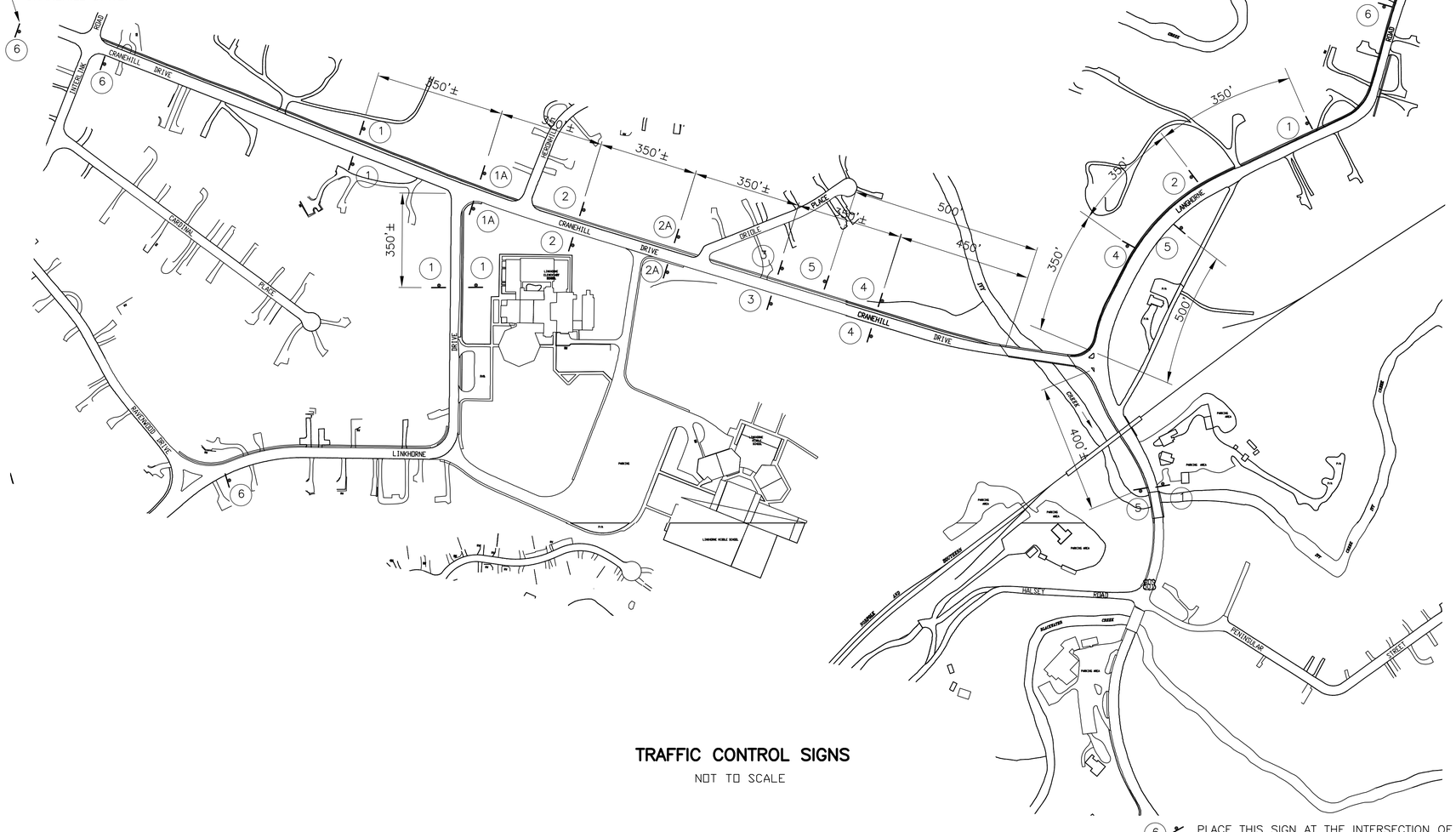

6 PLACE THIS SIGN AT THE INTERSECTION OF HILL STREET AND LANGHORNE ROAD.

NOTES FOR TRAFFIC CONTROL

1. SIGN SPACINGS SHALL BE ADJUSTED TO FIT FIELD CONDITIONS, AS DIRECTED BY THE ENGINEER.
2. ALL SIGNS, DRUMS, CONCRETE BARRIERS, AND ANY OTHER DEVICES USED IN CONSTRUCTION ZONES SHALL BE KEPT CLEAN AND PROPERLY ALIGNED AT ALL TIMES.
3. ALL SIGNS THAT GOVERN TRAFFIC FLOW THROUGH A CONSTRUCTION ZONE SHALL BE COVERED OR REMOVED AND STORED AWAY FROM TRAFFIC WHEN NOT IN USE.
4. CONTRACTOR SHALL TEMPORARILY COVER ANY EXISTING SIGNS WHOSE MESSAGE CONTRADICTS TEMPORARY CONSTRUCTION SIGNS DURING CONSTRUCTION & UNCOVER THEM AT THE COMPLETION OF THE PROJECT, AS DIRECTED BY THE ENGINEER.
5. ALL SIGNS SHALL BE FIELD LOCATED AS DIRECTED BY THE ENGINEER.
6. CONCRETE BARRIER SHALL BE USED FOR THE DURATION OF THE PROJECT.
7. CONTRACTOR SHALL LIFT CONCRETE TRAFFIC BARRIERS TO PLACE INTO POSITION. SLIDING CONCRETE TRAFFIC BARRIERS SHALL NOT BE PERMITTED.
8. REFER TO ROAD DESIGN STANDARDS MB–9A PC FOR DETAILS OF THE CONCRETE TRAFFIC BARRIER.
9. BARRIERS SHALL BE MOVED AS NECESSARY, DURING DAYLIGHT HOURS ONLY, FOR PAVING APPROACHES, ETC.
10. ALL SIGNAGE SHALL BE DIAMOND GRADE (FLUORESCENT PRISMATIC LENS SHEETING).
11. ALL TEMPORARY CONSTRUCTION PAVEMENT MARKINGS SHALL BE FURNISHED AND INSTALLED BY THE CONTRACTOR.
12. ALL FINAL PAVEMENT MARKINGS SHALL BE COMPLETED BY THE CITY OF LYNCHBURG.
13. THE CONTRACTOR SHALL GIVE THE CITY OF LYNCHBURG A MINIMUM OF TEN (10) DAYS NOTICE PRIOR TO ANY TRAFFIC ALIGNMENT CHANGES.
14. THE CONTRACTOR SHALL PROVIDE & MAINTAIN THREE (3) MESSAGE BOARDS FOR PORTIONS OF STAGE 1 & 2 CONSTRUCTION, TO NOTIFY THE TRAVELING PUBLIC OF UPCOMING CHANGES IN TRAFFIC FLOW PATTERNS.

    STAGE 1 CONSTRUCTION: CONTRACTOR SHALL FURNISH AND MAINTAIN 3 MESSAGE BOARDS FOR 1 WEEK PRIOR TO CONSTRUCTION AND 1 WEEK AFTER CONSTRUCTION STARTS.

    STAGE 2 CONSTRUCTION: CONTRACTOR SHALL FURNISH AND MAINTAIN 3 MESSAGE BOARDS FOR 1 WEEK AFTER CONSTRUCTION STARTS.
15. THE CITY OF LYNCHBURG WILL DETERMINE THE LOCATION AND MESSAGE, TO BE DISPLAYED, FOR EACH MESSAGE BOARD PRIOR TO CONSTRUCTION.

NOTE: FOR ADDITIONAL SIGNAGE AND TRAFFIC CONTROL REQUIREMENTS, SEE SHEETS 21 & 22.

TRAFFIC CONTROL SIGNS

NOT TO SCALE

CRANEHILL DRIVE OVER IVY CREEK
TRAFFIC CONTROL SIGNS

COMMONWEALTH OF VIRGINIA
R. W. SCHWARTZ
No. 4291
1-20-04
PROFESSIONAL ENGINEER

SCHWARTZ & ASSOCIATES, INC.
CONSULTING ENGINEERS

7331 TIMBERLAKE ROAD
LYNCHBURG, VA.

THE CITY OF LYNCHBURG, VIRGINIA
DEPT. OF PUBLIC WORKS
ENGINEERING

DESIGNED BY: RES	DRAWN BY: RES	CHECKED BY: RWS
SCALE: AS SHOWN	PROJECT NO.: 02021–B	
DATE: JANUARY 20, 2004	SHEET 20 OF 30	

COMM. NO. 03026

CADD REFERENCE NO. traffic cranehill

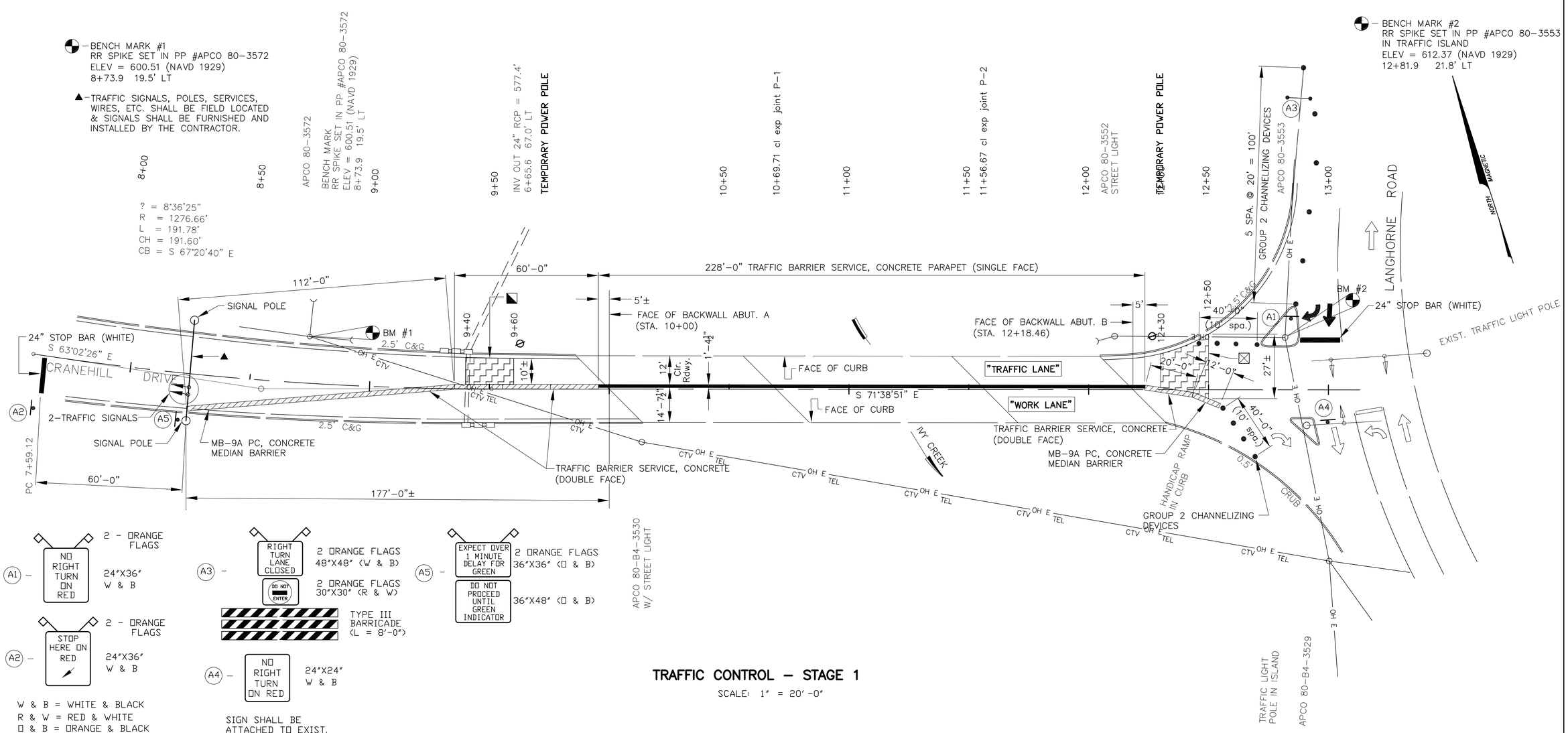

TRAFFIC CONTROL – STAGE 1

SCALE: 1" = 20'-0"

NOTE: CONTRACTOR SHALL FURNISH, INSTALL & GUY OFF 2 TEMPORARY POWER POLES (UPSTREAM SIDE OF BRIDGE) IN ORDER FOR THE CITY OF LYNCHBURG TO FURNISH & INSTALL A OVERHEAD LINE ON TO THE POLES AND TIE THE, CONTRACTOR FURNISHED, TEMPORARY SIGNALS, TO THE SIGNALS AT THE INTERSECTION OF CRANEHILL DRIVE AND LANGHORNE ROAD. THE CITY WILL FIELD LOCATE TEMPORARY POWER POLE LOCATIONS PRIOR TO CONSTRUCTION.

TEMPORARY POWER POLES SHALL BE SUFFICIENT LENGTH TO ACCOMMODATE POWER LINES WITH A 16'-0" MIN. VERTICAL CLEARANCE OVER ROADWAY.

◪ – CONTRACTOR SHALL MILL THIS AREA (1 1/2" TO 0") PRIOR TO JACKING & BLOCKING BRIDGE, INORDER TO TIE ASPHALT RAMP IN FROM STA. 9+40 TO STA. 10+00.

⊠ – CONTRACTOR SHALL MILL THIS AREA (0" TO 1 1/2") PRIOR TO JACKING & BLOCKING BRIDGE, INORDER TO TIE ASPHALT RAMP IN FROM STA. 12+18.46 TO STA. 12+50.

NOTE:

A 12'-0" MIN. CLEAR ROADWAY SHALL BE MAINTAINED AT ALL TIMES THROUGHOUT PROJECT.

ALL SIGN SIZES SHALL BE IN ACCORDANCE WITH CURRENT EDITION OF THE VA. WORK AREA PROTECTION MANUAL & M.U.T.C.D MANUAL.

FOR ADDITIONAL SIGNAGE AND NOTES, SEE SHEETS 20 & 22.

CRANEHILL DRIVE OVER IVY CREEK
TRAFFIC CONTROL – STAGE 1

COMMONWEALTH OF VIRGINIA
R. W. SCHWARTZ
No. 4291
1-20-04
PROFESSIONAL ENGINEER

SCHWARTZ & ASSOCIATES, INC.
CONSULTING ENGINEERS

7331 TIMBERLAKE ROAD
LYNCHBURG, VA.

THE CITY OF LYNCHBURG, VIRGINIA
DEPT. OF PUBLIC WORKS
ENGINEERING

DESIGNED BY: RES	DRAWN BY: RES	CHECKED BY: RWS
SCALE: AS SHOWN	PROJECT NO.: 02021-B	
DATE: JANUARY 20, 2004	SHEET 21 OF 30	

COMM. NO. 03026

CADD REFERENCE NO. 03026

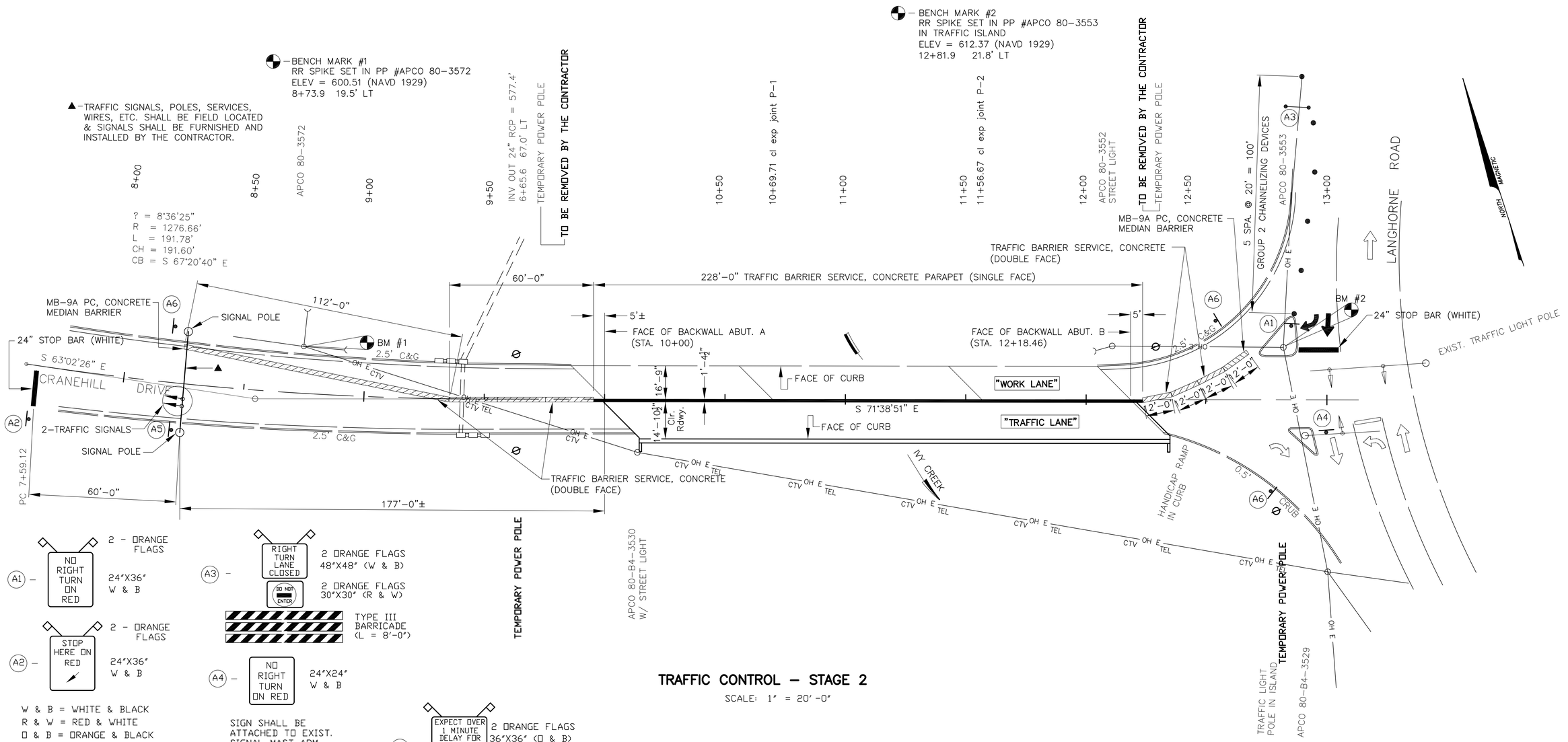

TRAFFIC CONTROL – STAGE 2

SCALE: 1" = 20'-0"

W & B = WHITE & BLACK
R & W = RED & WHITE
O & B = ORANGE & BLACK

● – DENOTES GROUP 2 CHANNELIZING DEVICES

– DENOTES SIGNS

– DENOTES TYPE III BARRICADE (8') & SIGN

NOTE:

A 14'-10 1/2" MIN. CLEAR ROADWAY SHALL BE MAINTAINED AT ALL TIMES THROUGHOUT PROJECT.

ALL SIGN SIZES SHALL BE IN ACCORDANCE WITH CURRENT EDITION OF THE VA. WORK AREA PROTECTION MANUAL & M.U.T.C.D MANUAL.

FOR ADDITIONAL SIGNAGE AND NOTES, SEE SHEETS 20 & 21.

NOTE: CONTRACTOR SHALL FURNISH, INSTALL & GUY OFF 2 TEMPORARY POWER POLES (UPSTREAM SIDE OF BRIDGE) IN ORDER FOR THE CITY OF LYNCHBURG TO FURNISH & INSTALL A OVERHEAD LINE ON TO THE POLES AND TIE THE, CONTRACTOR FURNISHED, TEMPORARY SIGNALS, TO THE SIGNALS AT THE INTERSECTION OF CRANEHILL DRIVE AND LANGHORNE ROAD. THE CITY WILL FIELD LOCATE TEMPORARY POWER POLE LOCATIONS PRIOR TO CONSTRUCTION.

TEMPORARY POWER POLES SHALL BE SUFFICIENT LENGTH TO ACCOMMODATE POWER LINES WITH A 16'-0" MIN. VERTICAL CLEARANCE OVER ROADWAY.

AT THE COMPLETION OF THE PROJECT OR AS DIRECTED BY THE ENGINEER, THE CONTRACTOR SHALL REMOVE ALL TEMPORARY POWER POLES, BACKFILL AND RESTORE AREA TO ITS ORIGINAL CONDITION AND RETAIN OWNERSHIP OF THE POLES.

CRANEHILL DRIVE OVER IVY CREEK
TRAFFIC CONTROL – STAGE 2

COMMONWEALTH OF VIRGINIA
R. W. SCHWARTZ
No. 4291
1-20-04
PROFESSIONAL ENGINEER

SCHWARTZ & ASSOCIATES, INC.
CONSULTING ENGINEERS
7331 TIMBERLAKE ROAD
LYNCHBURG, VA.

THE CITY OF LYNCHBURG, VIRGINIA
DEPT. OF PUBLIC WORKS
ENGINEERING

DESIGNED BY: RES	DRAWN BY: RES	CHECKED BY: RWS
SCALE: AS SHOWN		PROJECT NO.: 02021-B
DATE: JANUARY 20, 2004		SHEET 22 OF 30

COMM. NO. 03026

CADD REFERENCE NO. 03026

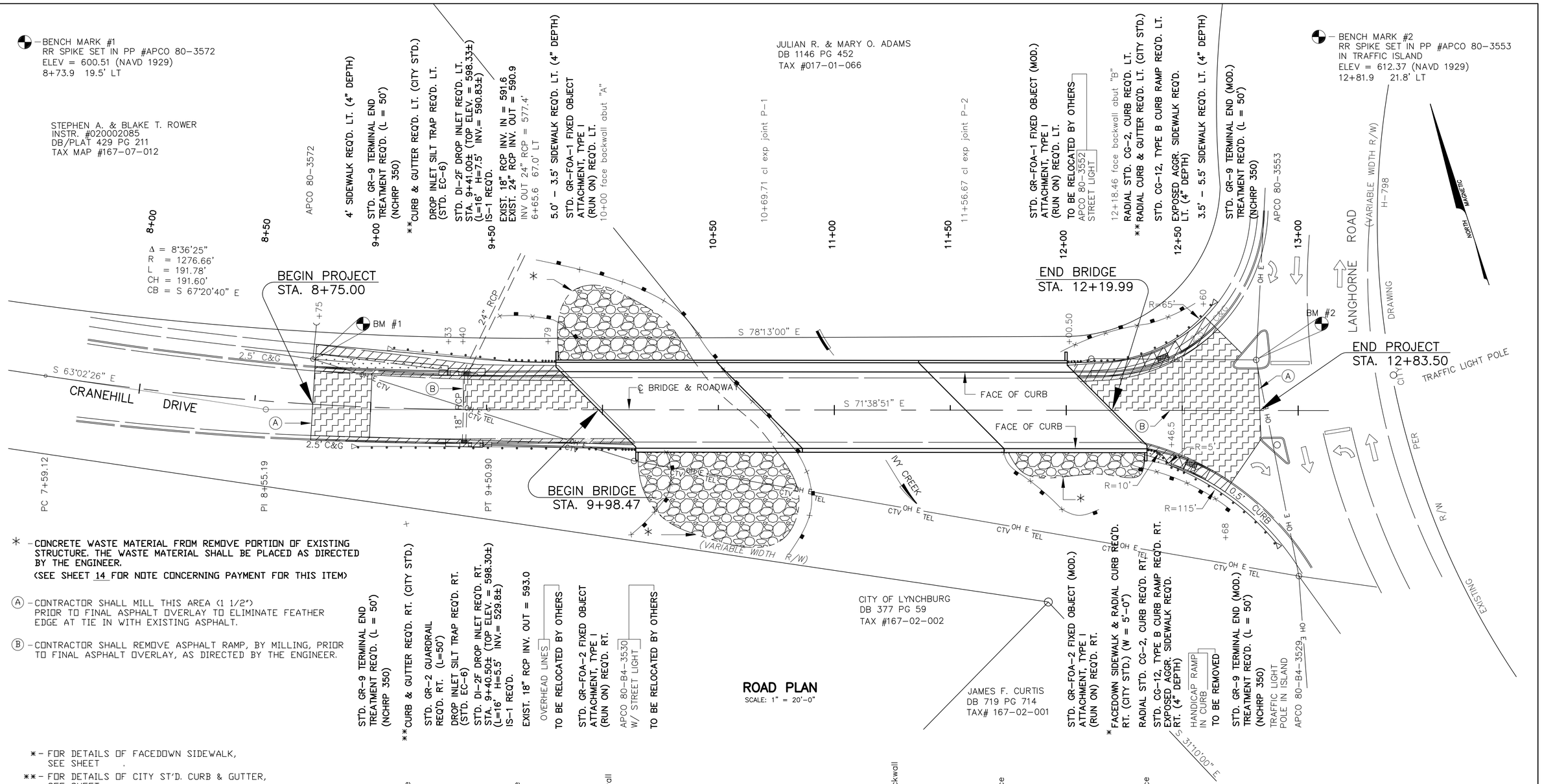

CADD REFERENCE NO. 03026

CRANEHILL DRIVE OVER IVY CREEK
ROAD PLAN

COMMONWEALTH OF VIRGINIA
R. W. SCHWARTZ
No. 4291
1-20-04
PROFESSIONAL ENGINEER

SCHWARTZ & ASSOCIATES, INC.
CONSULTING ENGINEERS
7331 TIMBERLAKE ROAD
LYNCHBURG, VA.

THE CITY OF LYNCHBURG, VIRGINIA
DEPT. OF PUBLIC WORKS
ENGINEERING

DESIGNED BY: RES	DRAWN BY: RES	CHECKED BY: DLP
SCALE: AS SHOWN	PROJECT NO.: 02021-B	
COMM. NO. 03026	DATE: JANUARY 20, 2004	SHEET 23 OF 30

GENERAL NOTES

SPECIFICATIONS:

CONSTRUCTION - VIRGINIA DEPARTMENT OF TRANSPORTATION ROAD & BRIDGE SPECIFICATIONS, JAN. 2002.

STANDARDS - VIRGINIA DEPARTMENT OF TRANSPORTATION ROAD & BRIDGE STANDARDS, FEB. 2001.

GENERAL:

THIS PROJECT SHALL BE CONSTRUCTED IN ACCORDANCE WITH THE VIRGINIA DEPARTMENT OF TRANSPORTATION WORK AREA PROTECTION MANUAL, JANUARY 2003 (MOST CURRENT EDITION).

VEHICULAR & PEDESTRIAN ACCESS TO BUSINESSES SHALL BE MAINTAINED @ ALL TIMES DURING THIS PROJECT.

THESE PLANS ARE INCOMPLETE UNLESS ACCOMPANIED BY THE SUPPLEMENTAL SPECIFICATIONS AND SPECIAL PROVISIONS INCLUDED IN THE CONTRACT DOCUMENTS.

THE CONTRACTOR SHALL PROVIDE ENGINEER SAFE ACCESS TO ALL AREAS OF WORK THROUGHOUT COURSE OF CONSTRUCTION AND FOR FINAL INSPECTION AFTER ALL WORK IS COMPLETE.

GRADING:

THE GRADE LINE DENOTES TOP OF FINISHED PAVEMENT UNLESS SHOWN OTHERWISE ON TYPICAL SECTIONS OR PLANS.

ALL COSTS FOR ANY ADDITIONAL FILL MATERIAL REQUIRED FOR CONSTRUCTION OF CURBS, GUTTERS, SIDEWALKS AND SHOULDERS SHALL BE INCLUDED IN OTHER BID ITEMS.

THE COST OF CUTTING, REMOVAL AND DISPOSAL OF EXISTING ITEMS SUCH AS THOSE LISTED BELOW SHALL BE INCLUDED IN THE PRICE BID FOR "DEMOLITION OF PAVEMENT":

ASPHALT PAVEMENT, CONCRETE CURB, SIDEWALK, PIPES, DROP INLETS & HANDRAILS.

ALL COSTS FOR EXCAVATION AND DISPOSAL OF MATERIAL FOR PLACEMENT OF DROP INLETS, NEW CURB, GUTTERS AND SIDEWALK, NEW PAVEMENT STRUCTURE, NEW PIPES & TRENCH OUTS SHALL BE INCLUDED IN UNIT PRICE BID FOR "DEMOLITION OF PAVEMENT".

ALL COSTS FOR GRADING, SHAPING, SEEDING, FERTILIZING, LIMING, OVER SEEDING, FURNISHING & PLACING TOPSOIL AND MULCHING, IN DISTURBED AREAS OF THE PROJECT SHALL BE PAID FOR UNDER PRICE BID "SEEDING," LUMP SUM. THIS BID ITEM SHALL ALSO INCLUDE ALL COSTS FOR REPLACING DAMAGED SHRUBS, FLOWERS, ETC. ANY DAMAGED SHRUBS OR FLOWERS SHALL BE REPLACED WITH THE ORIGINAL SIZE AND TYPE THAT WAS DAMAGED.

ALL COSTS FOR BACK FILLING AREAS OF EXIST. PIPES, & DROP INLETS SHALL BE INCLUDED IN UNIT PRICE BID FOR "DEMOLITION OF PAVEMENT".

ALL AREA'S DISTURBED ON THIS PROJECT SHALL BE RESTORED BACK TO ITS ORIGINAL OR BETTER CONDITION AS DIRECTED BY THE ENGINEER. ALL COST FOR THIS SHALL BE INCLUDED IN THE APPROPRIATE BID ITEMS.

ALL COSTS FOR BACK FILLING BEHIND OR BETWEEN SIDEWALKS, CURBS & GUTTER, AS DIRECTED BY THE ENGINEER, SHALL BE INCLUDED IN THE APPROPRIATE BID ITEM.

CLEARING & GRUBBING IS TO BE CONFINED TO THOSE AREAS NEEDED FOR CONSTRUCTION. NO TREES OR SHRUBS (IN UNGRADED AREAS) ARE TO BE CUT WITHOUT THE PERMISSION OF THE ENGINEER.

THERE IS NO ANTICIPATION FOR THE NEED OF UNDERCUT EXCAVATION BELOW THE NORMAL TRENCH SHOWN ON THE TYPICAL SECTIONS. IF DURING CONSTRUCTION THE ENGINEER DEEMS IT NECESSARY TO EXCAVATE BELOW THE NORMAL TRENCH SHOWN, THE CONTRACTOR WILL BE REQUIRED TO EXCAVATE TO THE ELEVATION AS REQUESTED AND BE PAID USING THE SAME PRICE BID FOR REGULAR EXCAVATION IN CUBIC YARDS. FILL MATERIAL SHALL BE BORROW EXCAVATION OR AGGREGATE BASE MATERIAL, AS DIRECTED BY THE ENGINEER, AND PAID FOR UNDER THE UNIT PRICE BID FOR MATERIAL USED.

CONCRETE THAT IS REMOVED FROM EXISTING BRIDGE STRUCTURE SHALL BE PLACED IN AREAS SHOWN ON PLAN SHEET AND AS DIRECTED BY THE ENGINEER. ALL CONCRETE WASTE MATERIAL SHALL BE FREE OF ALL REINFORCING STEEL AND SHALL BE CLASS II, RIPRAP SIZE (NO PIECE LARGER THAN 500 LBS). THE CONTRACTOR SHALL STOCKPILE CONCRETE WASTE MATERIAL UNTIL IT IS NEEDED. IN AREAS WHERE CONCRETE WASTE MATERIAL IS PLACED, THE CONTRACTOR SHALL PLACE THE MATERIAL ON TOP OF THE ORIGINAL GROUND AND ALL SURPLUS MATERIAL DISPOSED OF OFF PROJECT. UNDER NO CIRCUMSTANCES SHALL TOP OF CONCRETE WASTE MATERIAL BE HIGHER THAN 2.5' ABOVE THE SURROUNDING GROUND LEVEL AND THE CONTRACTOR SHALL FINE GRADE THE GROUND TO THE CONCRETE WASTE MATERIAL. ALL COST FOR THIS WORK SHALL BE INCLUDED IN LUMP SUM BID "DISMANTLE AND REMOVE PORTION OF EXISTING STRUCTURE".

DRAINAGE:

THE LOCATIONS OF ALL DRAINAGE STRUCTURES SHOWN ON THESE PLANS ARE APPROXIMATE ONLY, WITH THE EXCEPTION OF STRUCTURES SHOWING SPECIFIC STATIONS, SPECIAL DESIGN BRIDGES. THE "H" DIMENSIONS SHOWN ON THE PLANS FOR DROP INLETS ARE APPROXIMATE.

EXISTING DRAINAGE FACILITIES BEING UTILIZED AS A PART OF THE DRAINAGE SYSTEM SHALL BE CLEANED AS DIRECTED BY THE ENGINEER. THE COST INCIDENTAL TO THIS IS TO BE INCLUDED IN THE CONTRACT PRICE FOR OTHER ITEMS.

ALL COSTS FOR NEW DROP INLETS SHALL BE FULL COMPENSATION FOR ALL MATERIALS, CUTTING OR EXTENDING EXISTING DRAINAGE PIPES, LABOR, TOOLS, EQUIPMENT, EXCAVATION, BACK FILL, DISPOSAL OF SURPLUS MATERIAL AND INCIDENTALS NECESSARY TO COMPLETE THE WORK.

PAVEMENT:

THE MATERIALS LISTED BELOW ARE TO BE PAID ON A TONNAGE BASIS ON THIS PROJECT. THE THEORETICAL TONNAGE SHOWN ON THESE PLANS IS BASED ON THE WEIGHT SHOWN THEREON. THE WEIGHT WILL VARY IN ACCORDANCE WITH THE SPECIFIC GRAVITY OF THE AGGREGATES AND THE ASPHALTIC CONTENT OF THE MIX ACTUALLY USED TO SECURE THE DESIGN DEPTH. THE WEIGHT OF THE ASPHALT CONCRETE IS BASED ON 95% OF THEORETICAL MAXIMUM DENSITY.

ASPHALT CONCRETE TYPE SM-9.5D @ 110 LBS. PER SQ. YD. PER INCH OF DEPTH.

ASPHALT CONCRETE BASE COURSE, TYPE BM-37.5 @ 113 LBS. PER SQ. YD. PER INCH OF DEPTH.

AGGREGATE BASE MATERIAL, TYPE I, SIZE NO. 21-B @ 150 LBS. PER CU. FT. (PLUS 6% MOISTURE CORRECTION).

ALL COSTS FOR LIQUID ASPHALT CEMENT SHALL BE INCLUDED IN UNIT PRICE BID FOR "ASPHALT CONCRETE."

INCIDENTALS:

WHEN NO CENTERLINE ALIGNMENT IS SHOWN FOR A PROPOSED ENTRANCE, THE ENTRANCE IS TO BE CONSTRUCTED IN THE SAME LOCATION AS THE EXISTING ENTRANCE.

ALL COSTS FOR COVERING OR REMOVING EXISTING SIGNS, DURING CONSTUCTION, & UNCOVERING OR RE-ERECTING THE SIGNS @ THE COMPLETION OF THE PROJECT SHALL BE INCLUDED IN LUMP SUM BID "MAINTENANCE OF TRAFFIC".

ALL COSTS FOR MAINTENANCE OF ALL EROSION & SILTATION CONTROL ITEMS, AS DIRECTED BY THE ENGINEER, SHALL BE INCLUDED IN THE APPROPRIATE BID ITEMS.

CONTRACTOR SHALL PLAN AND STAGE HIS WORK SO ACCESS SHALL BE MAINTAINED TO RESIDENTS AND BUSINESSES @ ALL TIMES THROUGHOUT THIS PROJECT. ALL COSTS FOR THIS SHALL BE INCLUDED IN OTHER ITEMS.

NO ADDITIONAL COMPENSATION SHALL BE MADE FOR ROCK EXCAVATION ON THIS PROJECT.

UTILITIES:

THE CONTRACTOR SHALL TAKE EXTREME CAUTION IN HIS OPERATIONS SO THAT NO DAMAGE IS DONE TO UTILITIES IN VICINITY OF THE PROJECT LIMITS. IF ANY UTILITIES ARE DAMAGED BY THE CONTRACTOR, THEY SHALL BE REPAIRED, AT HIS EXPENSE AND TO THE SATISFACTION OF THE ENGINEER.

EROSION AND SEDIMENT (E&S) CONTROL:

THE TEMPORARY EROSION AND SILTATION CONTROL ITEMS SHOWN ON THE PLANS ARE INTENDED TO PROVIDE A GENERAL PLAN FOR CONTROLLING EROSION AND SILTATION WITHIN THE PROJECT LIMITS. E&S CONTROL IS BASED ON FIELD CONDITIONS AT THE TIME OF PLAN DEVELOPMENT AND AN ASSUMED SEQUENCE OF CONSTRUCTION. THE CONTRACTOR, IN CONJUNCTION WITH THE ENGINEER, SHALL ADJUST THE LOCATION, QUANTITY AND TYPE OF EROSION AND SILTATION CONTROL ITEMS REQUIRED BASED ON THE ACTUAL FIELD CONDITIONS ENCOUNTERED AT THE TIME OF CONSTRUCTION AND THE SELECTED SEQUENCE OF CONSTRUCTION.

THE AREA BEYOND THE PROJECT'S CONSTRUCTION AREA SHALL BE PROTECTED FROM SILTATION. PERIMETER CONTROLS SUCH AS FILTER BARRIER, SILT FENCE, DIVERSION DIKES, TURBIDITY CURTAINS, ETC. SHALL BE INSTALLED PRIOR TO ANY GRUBBING OPERATIONS OR OTHER EARTH MOVING ACTIVITIES.

SILT REMOVAL AND SEDIMENT CLEAN-OUT FROM EROSION CONTROL ITEMS SHALL BE PERFORMED IN ACCORDANCE WITH THE FOLLOWING:

- ALL OTHER EROSION AND SILTATION CONTROL ITEMS - WHEN THE CAPACITY, HEIGHT, OR DEPTH HAS BEEN REDUCED BY 50%

PRIOR TO BEGINNING ANY CONSTRUCTION , CONTRACTOR SHALL CONTACT MISS UTILITY & HAVE ALL UNDERGROUND UTILITIES LOCATED & MARKED IN FIELD.

CRANEHILL DRIVE OVER IVY CREEK
GENERAL NOTE (ROADWAY)

COMMONWEALTH OF VIRGINIA
R. W. SCHWARTZ
No. 4291
1-20-04
PROFESSIONAL ENGINEER

SCHWARTZ & ASSOCIATES, INC.
CONSULTING ENGINEERS

7331 TIMBERLAKE ROAD
LYNCHBURG, VA.

THE CITY OF LYNCHBURG, VIRGINIA
DEPT. OF PUBLIC WORKS
ENGINEERING

DESIGNED BY: RES	DRAWN BY: RES	CHECKED BY: DLP
SCALE: NOT TO SCALE		PROJECT NO.: 02021-B
COMM. NO. 03026	DATE: JANUARY 20, 2004	SHEET 24 OF 30

CADD REFERENCE NO. 03026RGN

TYPICAL SECTION
(CRANEHILL DRIVE)

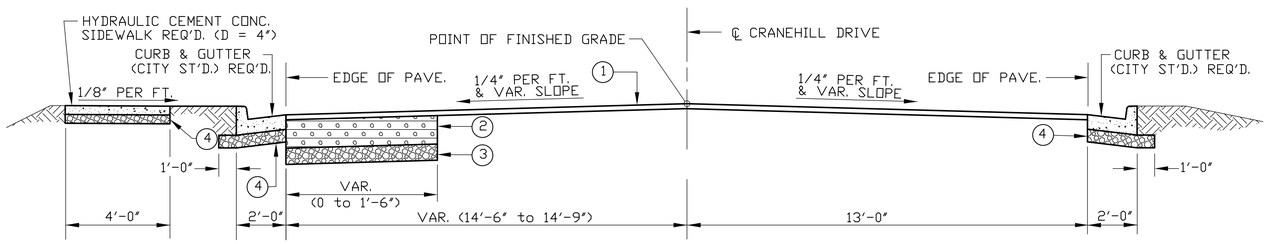

STATION 8+75.00 TO STATION 9+33.00

TYPICAL SECTION
(CRANEHILL DRIVE)

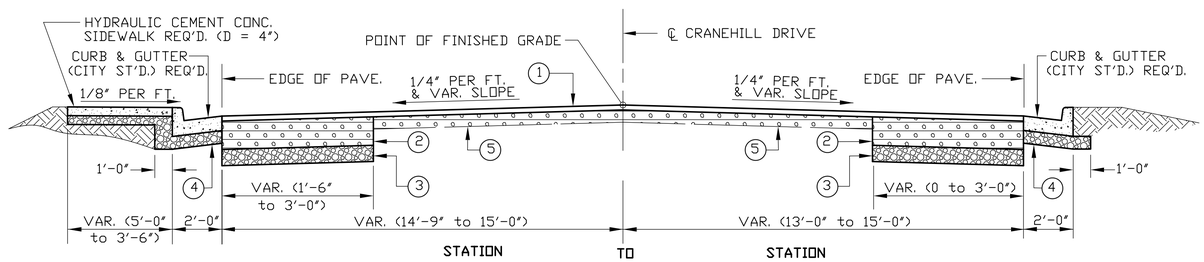

STATION 9+33.00 TO STATION 9+98.47

TYPICAL SECTION
(CRANEHILL DRIVE)

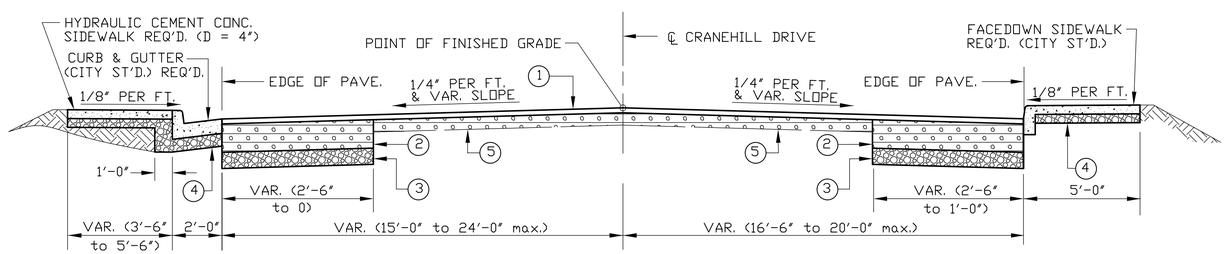

STATION 12+19.99 TO STATION 12+50.00

TYPICAL SECTION
(CRANEHILL DRIVE)

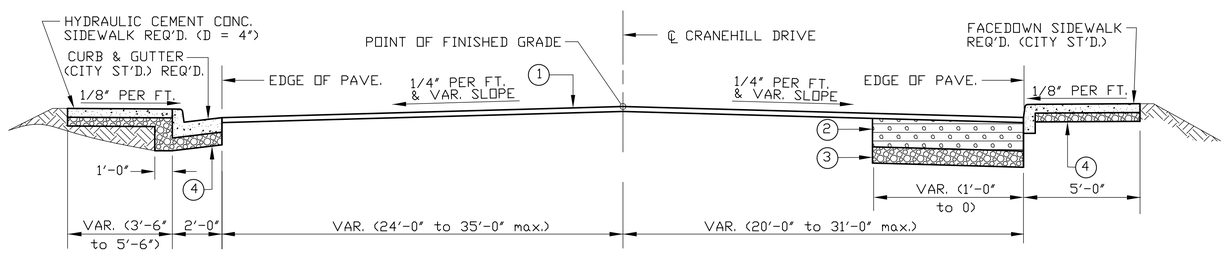

STATION 12+50.00 TO STATION 12+83.50

FACEDOWN SIDEWALK
(City Standard - R-7)

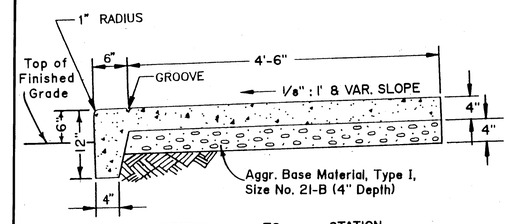

STATION	TO	STATION	
12+35.00±		12+71.00±	(RT. SIDE ONLY)

NOTES:

SIDEWALK AND CURB TO BE MONOLITHICALLY POURED CLASS A3 CONCRETE.

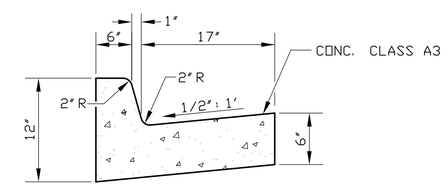

CITY ST'D. CURB & GUTTER

LEGEND

1. ASPHALT SURFACE COURSE TYPE, SM-9.5D (1 1/2") @ 165 LBS. PER SQ. YD. (NON-POLISHING AGGREGATE)
2. ASPHALT CONC. BASE COURSE, TYPE BM-37.5 (12" DEPTH)
3. AGGREGATE BASE MATERIAL, TYPE I, SIZE NO. 21-B (6" DEPTH)
4. AGGREGATE BASE MATERIAL, TYPE I, SIZE NO. 21-B (4" DEPTH)
5. ASPHALT CONC. BASE COURSE, TYPE BM-37.5 (VAR. DEPTH - 2" TO 5")

CRANEHILL DRIVE OVER IVY CREEK
TYPICAL SECTION

COMMONWEALTH OF VIRGINIA
R. W. SCHWARTZ
No. 4291
1-20-04
PROFESSIONAL ENGINEER

SCHWARTZ & ASSOCIATES, INC.
CONSULTING ENGINEERS

7331 TIMBERLAKE ROAD
LYNCHBURG, VA.

THE CITY OF LYNCHBURG, VIRGINIA
DEPT. OF PUBLIC WORKS
ENGINEERING

DESIGNED BY: RES	DRAWN BY: RES	CHECKED BY: DLP
SCALE: NOT TO SCALE		PROJECT NO.: 02021-B
COMM. NO. 03026	DATE: JANUARY 20, 2004	SHEET 25 OF 30

CADD REFERENCE NO. 03026RTS

PAVEMENT SUMMARY

	▲ ASPHALT CONCRETE TYPE SM-9.5D	ASPHALT CONC. BASE COURSE TYPE BM-37.5	AGGR. BASE MATERIAL TYPE I, SIZE #21-B (6% MOIST. CORRECTION)	CRUSHER RUN AGGR. NO. 25 OR NO. 26	FLEXIBLE PAVEMENT PLANING (1½" DEPTH)
	TON	TON	TON	TON	S.Y.
TOTALS	100	105	60	50	930

▲ - NON-POLISHING AGGREGATE

DRAINAGE SUMMARY

	DROP INLET ST'D. DI-2F H=7.5' L=16'	DROP INLET ST'D. DI-2F H=5.5' L=16'	DROP INLET SILT TRAP (ST'D. EC-6)	TEMPORARY SILT FENCE (ST'D. EC-5)	SILTATION CONTROL EXCAVATION
	EA.	EA.	EA.	L.F.	C.Y.
TOTALS	1	1	2	455	60

INCIDENTAL SUMMARY

	CONSTRUCTION SURVEYING	MAINTENANCE OF TRAFFIC	ALLAYING DUST	⊕ DEMOLITION OF PAVEMENT	HYDRAULIC CEMENT CONCRETE SIDEWALK (4" DEPTH)	FACEDOWN SIDEWALK (CITY ST'D.) (4" DEPTH)	RADIAL FACEDOWN CURB (CITY ST'D.)	EXPOSED AGGREGATE SIDEWALK (4" DEPTH)	CURB & GUTTER (CITY ST'D.)	RADIAL CURB & GUTTER (CITY ST'D.)	RADIAL STD. CG-2 CURB	⊕ TRAFFIC BARRIER SERVICE, CONCRETE
	LUMP SUM	LUMP SUM	HOURS	S.Y.	S.Y.	S.Y.	L.F.	S.Y.	L.F.	L.F.	L.F.	L.F.
TOTALS	L.S.	LUMP SUM	100	183	80	12	40	3	214	65	32	424

INCIDENTAL SUMMARY (CONT.)

	✳✳ SEEDING	GUARDRAIL ST'D. GR-2	GUARDRAIL TERMINAL ST'D. GR-9 (NCHRP-350)	GUARDRAIL TERMINAL ST'D. GR-9 (MOD.) (NCHRP-350)	FIXED OBJECT ATTACHMENT GR-FOA-2 TYPE I (RUN ON)	FIXED OBJECT ATTACHMENT GR-FOA-2 TYPE I (RUN ON) (MOD.)	FIXED OBJECT ATTACHMENT GR-FOA-1 TYPE I (RUN ON)	FIXED OBJECT ATTACHMENT GR-FOA-1 TYPE I (RUN ON) (MOD.)	FURNISH PORTABLE CHANGEABLE MESSAGE SIGN	PORTABLE CHANGEABLE MESSAGE SIGN
	LUMP SUM	L.F.	EACH	EACH	EACH	EACH	EACH	EACH	EACH	HOUR
TOTALS	L.S.	50	2	2	1	1	1	1	6	1,512

⊕ - DENOTES ITEMS TO BE PAID FOR ON A PLAN QUANTITY BASIS, ACCORDING TO THE CURRENT ROAD & BRIDGE SPECIFICATIONS.

✳✳ - APPROXIMATELY 0.3 ACRES (FOR ESTIMATING PURPOSES ONLY)

NOTE: WHERE DEMOLITION OF PAVEMENT IS SHOWN, THERE WILL BE NO ADDITIONAL COMPENSATION FOR TRENCH OUT.

DISPOSAL OF SURPLUS MATERIAL IS A NON-PAY ITEM.

ANY DENUDING NECESSARY IS A NON-PAY ITEM.

FILL IS NOT A PAY ITEM.

SEE SHEET 3 FOR ADDITIONAL BRIDGE SUMMARY.

CADD REFERENCE NO. 03026SUM

CRANEHILL DRIVE OVER IVY CREEK
SUMMARY

COMMONWEALTH OF VIRGINIA
R. W. SCHWARTZ
No. 4291
1-20-04
PROFESSIONAL ENGINEER

COMM. NO. 03026

SCHWARTZ & ASSOCIATES, INC.
CONSULTING ENGINEERS
7331 TIMBERLAKE ROAD
LYNCHBURG, VA.

THE CITY OF LYNCHBURG, VIRGINIA
DEPT. OF PUBLIC WORKS
ENGINEERING

DESIGNED BY: RES	DRAWN BY: RES	CHECKED BY: DLP
SCALE: NOT TO SCALE		PROJECT NO.: 02021-B
DATE: JANUARY 20, 2004		SHEET 26 OF 30

FHWA REGION	STATE	FEDERAL AID PROJECT	STATE	STATE PROJECT	SHEET NO.
3	VA				

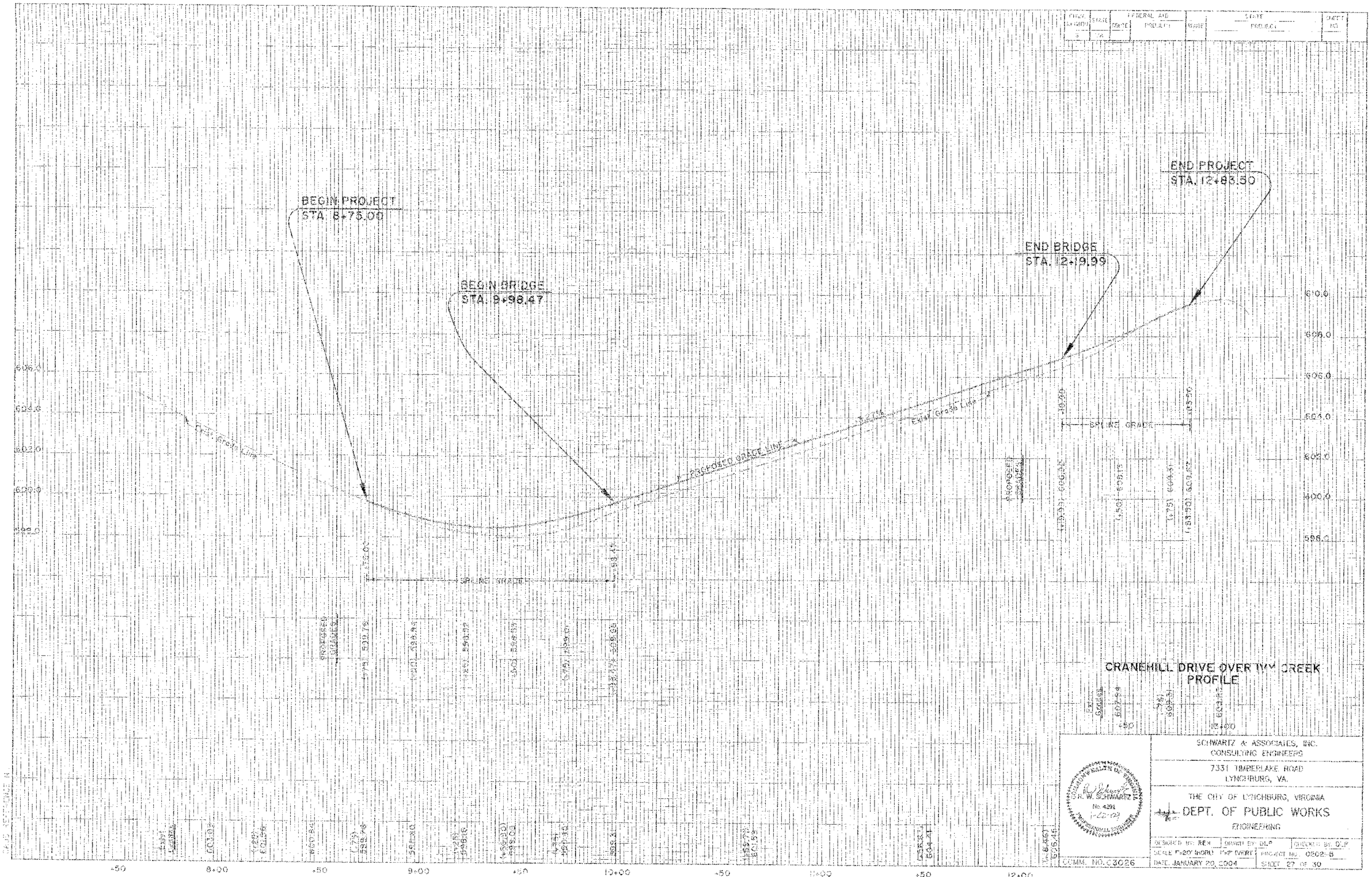

SCHWARTZ & ASSOCIATES, INC.
CONSULTING ENGINEERS
7331 TIMBERLAKE ROAD
LYNCHBURG, VA.

THE CITY OF LYNCHBURG, VIRGINIA
DEPT. OF PUBLIC WORKS
ENGINEERING

DESIGNED BY: REN | DRAWN BY: DLP | CHECKED BY: DLP
SCALE: 1"=20' (HORIZ) 1"=2' (VERT) | PROJECT NO. 0802-8
COMM. NO. C3026 | DATE: JANUARY 20, 2004 | SHEET 27 OF 30

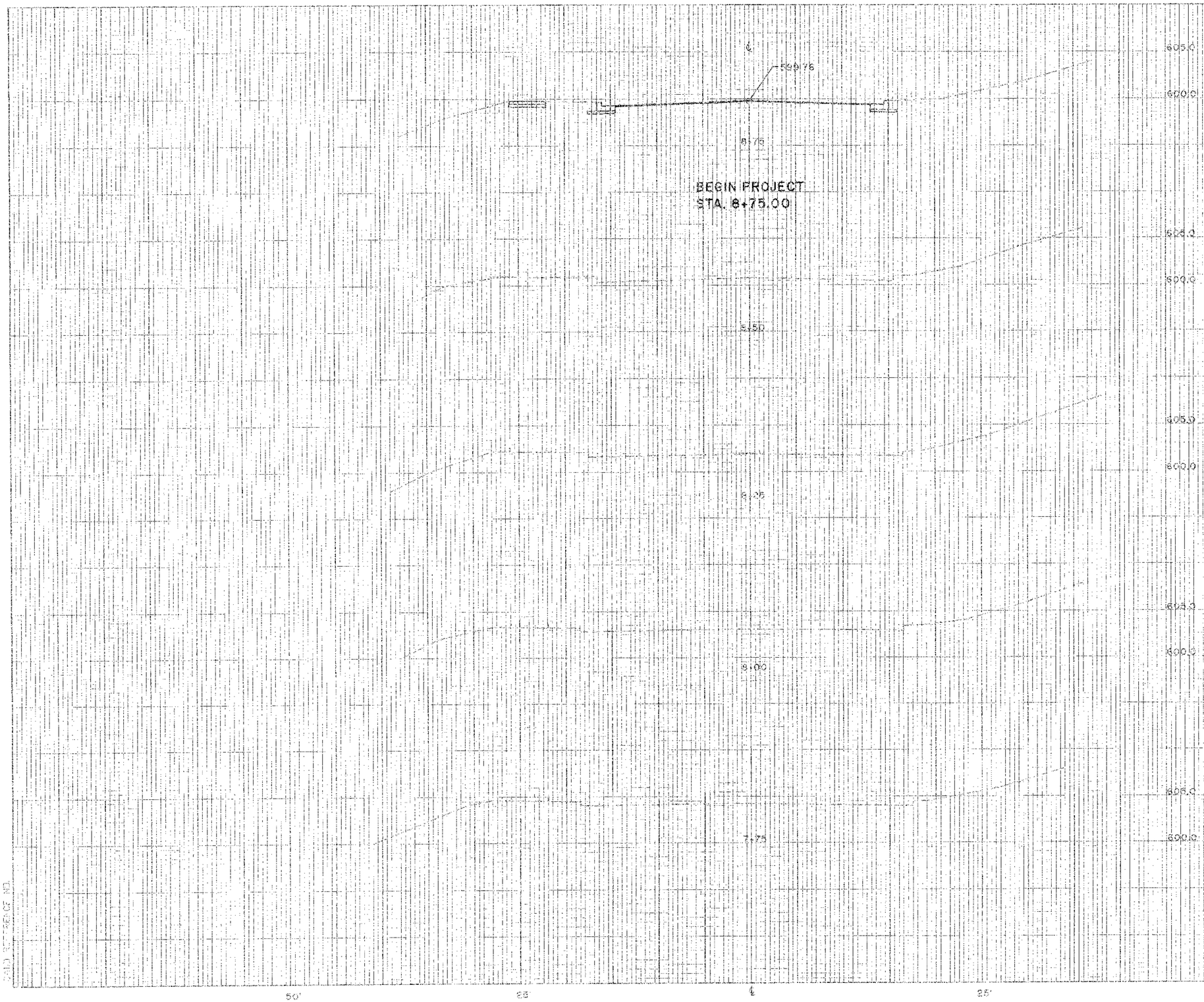

FUNC. REGION	STATE	FEDERAL AID PROJECT		STATE PROJECT	SHEET NO.
2	VA.	STATE			

CRANEHILL DRIVE OVER IVY CREEK
CROSS SECTIONS
STA. 7+75 TO STA. 8+75

COMMONWEALTH OF VIRGINIA
G.R.W. SCHWARTZ
No. 4291
(12-14)
PROFESSIONAL ENGINEER

SCHWARTZ & ASSOCIATES, INC.
CONSULTING ENGINEERS
7301 TIMBERLAKE ROAD
LYNCHBURG, VA.

THE CITY OF LYNCHBURG, VIRGINIA
DEPT. OF PUBLIC WORKS
ENGINEERING

DESIGNED BY: RES	DRAWN BY: CLP	CHECKED BY: CLP
SCALE: 1"=5' (VERT. & HORIZ.)	PROJECT NO.: 02021-B	
DATE: JANUARY 20, 2004	SHEET 26 OF 30	

COMM. NO. 03026

FISCAL YEAR	STATE	FEDERAL AID PROJECT	ROUTE	STATE PROJECT	SHEET NO.
5	VA.				

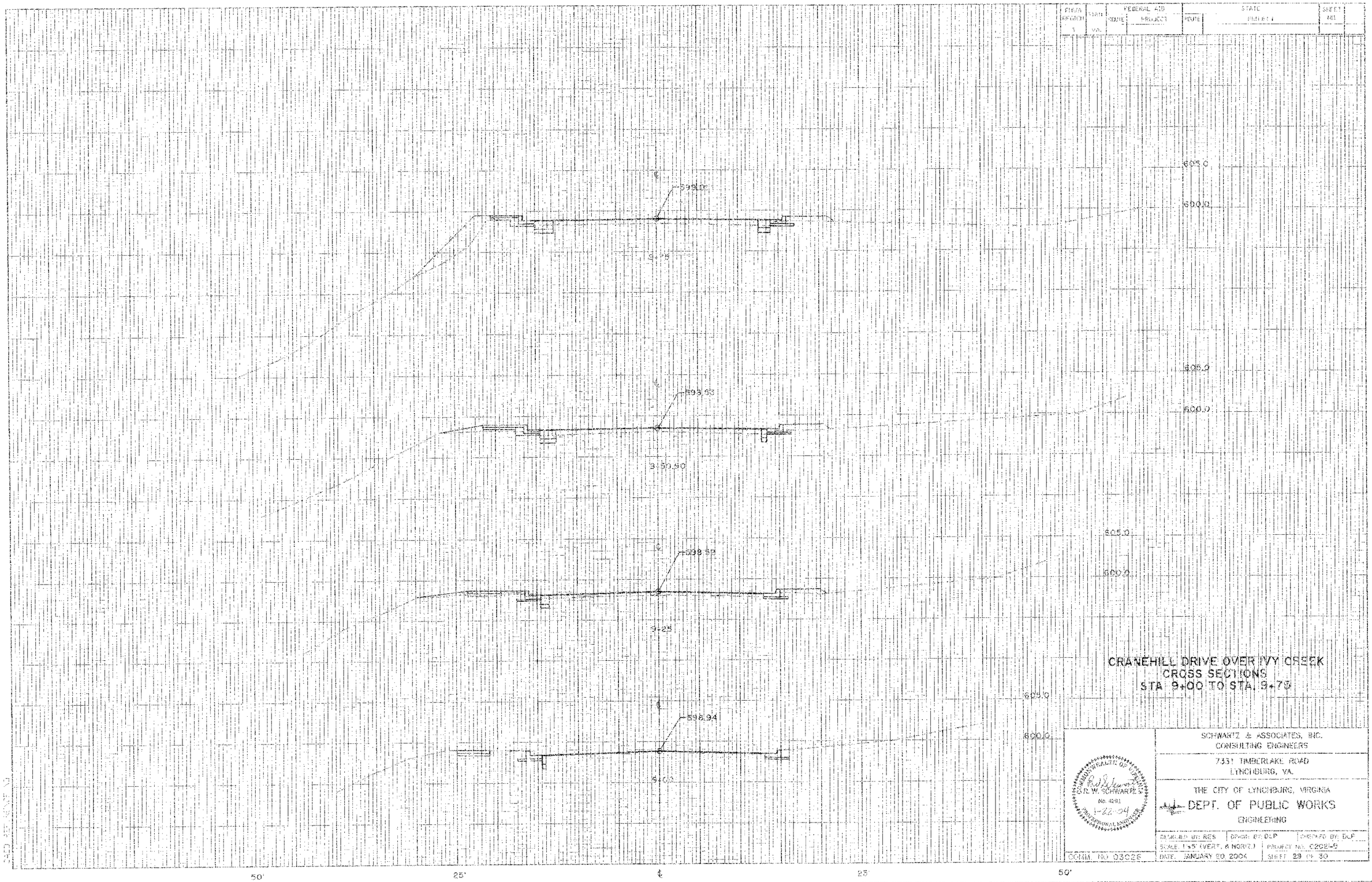

CRANEHILL DRIVE OVER IVY CREEK
CROSS SECTIONS
STA. 9+00 TO STA. 9+75

SCHWARTZ & ASSOCIATES, INC.
CONSULTING ENGINEERS
7331 TIMBERLAKE ROAD
LYNCHBURG, VA.

THE CITY OF LYNCHBURG, VIRGINIA
DEPT. OF PUBLIC WORKS
ENGINEERING

COMMONWEALTH OF VIRGINIA
S.R.W. SCHWARTZ JR.
No. 4281
1-22-04
PROFESSIONAL ENGINEER

DESIGNED BY: RES	DRAWN BY: DLP	CHECKED BY: DLP
SCALE: 1"=5' (VERT. & HORIZ.)	PROJECT NO. C2021-5	
DATE: JANUARY 20, 2004	SHEET 29 OF 30	

COMM. NO. 03026

FHWA REGION	STATE	FEDERAL AID PROJECT	ROUTE	STATE PROJECT	SHEET NO.
3	VA				

END PROJECT
STA. 12+83.50

END BRIDGE
STA. 12+19.99

BEGIN BRIDGE
STA. 9+96.47

CRANEHILL DRIVE OVER TINY CREEK
CROSS SECTIONS
STA. 12+50 TO STA. 12+75

COMMONWEALTH OF VIRGINIA
R. W. SCHWARTZ
No. 4251
1-22-04
PROFESSIONAL ENGINEER

SCHWARTZ & ASSOCIATES, INC.
CONSULTING ENGINEERS

7331 TIMBERLAKE ROAD
LYNCHBURG, VA.

THE CITY OF LYNCHBURG, VIRGINIA
DEPT. OF PUBLIC WORKS
ENGINEERING

DESIGNED BY: RES	DRAWN BY: DLP	CHECKED BY: DLP
SCALE: 1"=5' (VERT. & HORIZ.)	PROJECT NO.: 02021-B	
DATE: JANUARY 20, 2004	SHEET 30 OF 30	

COMM. NO. 03026

50' 25' 0 25' 50'