DEPARTMENT OF PUBLIC WORKS

ENGINEERING DIVISION

PROPOSED BRIDGE REPAIR OF
CRANEHILL DRIVE OVER IVY CREEK

STRUCTURE #8010 – CRANEHILL DRIVE OVER IVY CREEK

△1 **GENERAL CONSTRUCTION NOTE:**

THIS PROJECT SHALL BE CONSTRUCTED IN ACCORDANCE WITH VDOT ROAD AND BRIDGE SPECIFICATIONS DATED JAN., 2002, VDOT ROAD AND BRIDGE STANDARDS, 2001, CITY OF LYNCHBURG MANUAL OF SPECIFICATIONS AND STANDARD DETAILS, 2003, VIRGINIA WORK AREA PROTECTION MANUAL DATED JAN., 2003 AND AS AMENDED BY THE SUPPLEMENTAL SPECIFICATIONS & CONTRACT DOCUMENTS FOR THIS PROJECT AND THESE DRAWINGS.

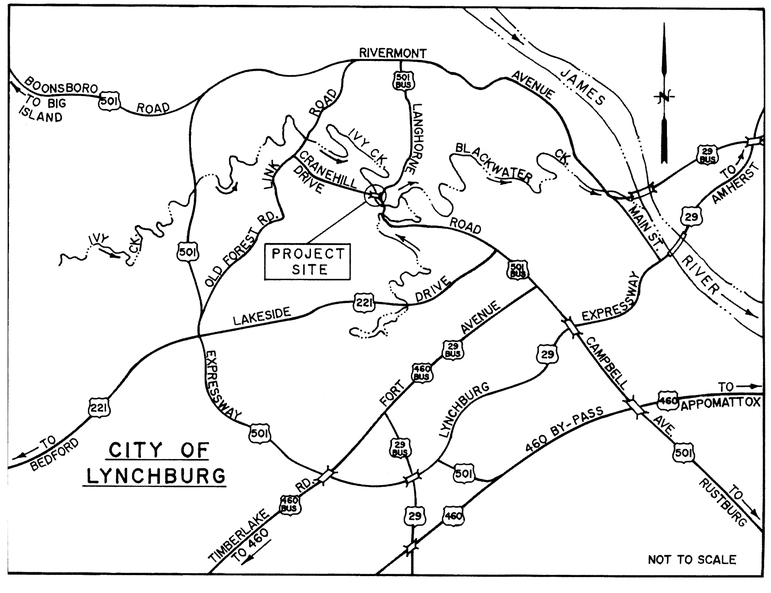

LOCATION MAP
NOT TO SCALE

CONVENTIONAL SYMBOLS

	PROPOSED	EXISTING
WATER		
VALVE AND BOX	WV	WV
HYDRANT	FH	FH
ANCHOR BLOCK		
WATER LINE	W	W
WATER METER	WM	WM
SEWER		
MANHOLE	MH	MH
LAMPSTACK	LS	LS
SANITARY SEWER	SS	SS
STORM SEWER	SD	SD
INLET OR CATCH BASIN		

RIGHT OF WAY	R/W
RAILROAD	
FENCE	X X X X X X X X
UNDERGROUND ELECTRICAL LINE	E
UNDERGROUND TELEPHONE LINE	T
GAS LINE	G
CULVERT	
POWER POLE	
TELEPHONE OR TELEGRAPH POLE	
PROPERTY CORNER	
PROPERTY LINE	P.L.
STREAM	

PLANS REVISED	
SHEET NO.	DATE
1, 3, 4, 5, 6 9, 13, 14, 15 16, 17, 18, 19 20, 21, 22 23, 26	2/23/04 △1

COMMONWEALTH OF VIRGINIA
R. W. SCHWARTZ
No. 4291
PROFESSIONAL ENGINEER
1-20-04

PROJECT NO.: 02021-B
DATE: January 20, 2004
SHEET 1 OF 30

APPROVED	
1/20/04	
DATE	DIRECTOR OF ENGINEERING
APPROVED	
20 JAN 04	
DATE	CONSTRUCTION ENGINEER

COMMONWEALTH OF VIRGINIA
WILLIAM T. WILSON
No. 13039
PROFESSIONAL ENGINEER

△1 REV. 2/23/04

COMM. NO.: 03026

CADD REFERENCE NO. 03026COVER

GENERAL NOTE:

WIDTHS: 4'–0" SIDEWALK, 33'–0" ROADWAY.

SPAN LAYOUT: 71'–2⅞" ROLLED BEAM, 86'–11½" PLATE GIRDER AND 63'–3⅞" ROLLED BEAM.

CAPACITY: HS20 – LOADING AND ALTERNATE MILITARY LOADING.

SPECIFICATIONS:

CONSTRUCTION: VIRGINIA DEPARTMENT OF TRANSPORTATION ROAD AND BRIDGE SPECIFICATIONS, 2002.

DESIGN: AASHTO STANDARD SPECIFICATIONS FOR HIGHWAY BRIDGES, 1996, 1997 AND 1998 INTERIM SPECIFICATIONS, AND VDOT MODIFICATIONS.

STANDARDS: VIRGINIA DEPARTMENT OF TRANSPORTATION ROAD & BRIDGE STANDARDS, 2001.

I. GENERAL:

THESE PLANS ARE INCOMPLETE UNLESS ACCOMPANIED BY THE SUPPLEMENTAL SPECIFICATIONS AND SPECIAL PROVISIONS INCLUDED IN THE CONTRACT DOCUMENTS.

THIS PROJECT IS TO BE CONSTRUCTED IN ACCORDANCE WITH THE VIRGINIA DEPARTMENT OF TRANSPORTATION WORK AREA PROTECTION MANUAL, JANUARY 2003.

DESIGN LOADING INCLUDES 8 P.S.F. ALLOWANCE FOR CONSTRUCTION TOLERANCES AND CONSTRUCTION METHODS.

DETAILS OF EXISTING STRUCTURE ARE SHOWN ON PLANS ON FILE AT THE CITY ENGINEER'S OFFICE (STRUCTURE NO. 8010).

THE USE OF PRESTRESSED DECK PANELS AS STAY–IN–PLACE FORMS WILL NOT BE PERMITTED. STAY–IN–PLACE METAL DECK FORMS MAY BE USED PROVIDED THE VALLEY'S ARE STYROFOAM FILLED TO THE SATISFACTION OF THE ENGINEER.

THE CONTRACTOR SHALL PROVIDE ENGINEER SAFE ACCESS TO ALL AREAS OF WORK THROUGHOUT COURSE OF RECONSTRUCTION AND FOR FINAL INSPECTION AFTER WORK IS COMPLETE.

CONTRACTOR SHALL TAKE EXTREME CAUTION IN HIS OPERATIONS SO THAT NO DAMAGE IS DONE TO UTILITIES IN THE VICINITY OF BRIDGE OR ON THE BRIDGE.

THE CONTRACTOR SHALL VERIFY, IN FIELD ALL DIMENSIONS, SKEW AND ELEVATIONS BEFORE BEGINNING CONSTRUCTION AND BEFORE SUBMITTING SHOP DRAWINGS.

ALL COSTS RELATED TO STRUCTURE EXCAVATION AND PLACING WASTE CONCRETE UNDER DECK DRAINS SHALL BE INCLUDED IN PRICE BID FOR "REMOVE PORTION OF EXISTING STRUCTURE."

1 II. TRAFFIC CONTROL:

ALL NEW CONCRETE SHALL HAVE OBTAINED FULL DESIGN STRENGTH BEFORE ALLOWING TRAFFIC ON NEW PORTION OF STRUCTURE.

~~BRIDGE SHALL BE CONSTRUCTED IN TWO STAGES AND SHALL BE OPEN TO SIGNALIZED TRAFFIC AT ALL TIMES.~~

III. CONCRETE

CONCRETE IN SUPERSTRUCTURE, INCLUDING RAILING, TERMINAL WALLS, AND SIDEWALK SHALL BE CLASS A4. CONCRETE IN SUBSTRUCTURE SHALL BE CLASS A4 WITH NO. 7 AGGREGATE.

COST OF ADHESIVE ANCHORS SHALL BE INCLUDED IN UNIT PRICE BID FOR EPOXY COATED REINFORCING STEEL.

ALL EXISTING CONCRETE REMOVED SHALL BE REMOVED TO HORIZONTAL AND VERTICAL PLANES ONLY AND TO SOUND CONCRETE.

EDGES OF AREAS TO BE REPAIRED SHALL BE SAW CUT TO A DEPTH OF 3/4" OR TO A DEPTH THAT WILL JUST CLEAR THE REINFORCING STEEL. NO FEATHER EDGES WILL BE PERMITTED BETWEEN THE NEW AND OLD CONCRETE.

1. BLASTING – GENERAL

ALL CONCRETE AREAS BLASTED SHALL BE BLASTED FOR A TIME SUFFICIENT TO EXPOSE SOUND CONCRETE AND COARSE AGGREGATE, UNLESS OTHERWISE NOTED. THEY SHALL BE BLASTED USING AN ABRASIVE MATERIAL OR A MIXTURE OF WATER (8,000 PSI MIN.) AND ABRASIVE.

ALL REINFORCING STEEL AREAS BLASTED SHALL BE BLASTED UNTIL ALL CONCRETE, RUST, SCALE, CORRODED STEEL MATERIAL AND FOREIGN MATERIAL ARE REMOVED TO CLEAN WHITE METAL.

2. BLASTING – FOR BONDING EPOXY

BLASTING, PRIOR TO APPLICATION OF BONDING EPOXY, SHALL BE TO A MEDIUM FINISH THAT IS ONE SUFFICIENT TO GENERALLY EXPOSE COARSE AGGREGATE WITH SLIGHT REVEAL – MAXIMUM REVEAL 1/4 INCH.

CONTRACTOR SHALL EXERCISE EXTREME CAUTION WHEN REMOVING EXISTING CONCRETE SO THAT NONE OF THE PORTION OF THE STRUCTURE OR REINFORCING STEEL TO REMAIN IN PLACE IS DAMAGED. ALL EXISTING CONCRETE THAT IS REMOVED IN SUBSTRUCTURE SHALL BE REMOVED WITH PNEUMATIC HAMMER (MAXIMUM WEIGHT 35 LBS.) EXCEPT 15 LB. MAXIMUM WEIGHT HAMMER FOR DOING FINAL TRIM WORK.

IV. REINFORCING STEEL:

DEFORMED REINFORCING BARS SHALL CONFORM TO ASTM A615, GRADE 60. ALL REINFORCING BAR DIMENSIONS ON THE DETAILED DRAWINGS ARE TO CENTERS OF BARS EXCEPT WHERE OTHERWISE NOTED AND ARE SUBJECT TO FABRICATION AND CONSTRUCTION TOLERANCES.

WHEN DRILLING FOR ADHESIVE ANCHORS, EXTREME CAUTION SHALL BE TAKEN IN ORDER THAT EXISTING REINFORCING STEEL IS NOT DAMAGED. ANY REINFORCING STEEL DAMAGED SHALL BE CORRECTED AT THE CONTRACTOR'S EXPENSE.

GREAT CARE SHALL BE TAKEN DURING THE REMOVAL OF CONCRETE IN THE SUBSTRUCTURE IN ORDER THAT THE EXISTING REINFORCING STEEL TO BE RE–USED IS NOT DAMAGED.

ANY EXISTING REINFORCING STEEL THAT IS TO REMAIN IN STRUCTURE AND IS DAMAGED IN SUBSTRUCTURE REMODELING, AS DETERMINED BY THE ENGINEER, SHALL BE CORRECTED AT THE CONTRACTOR'S EXPENSE.

ALL EXPOSED REINFORCING STEEL IN CONCRETE REMODELING AREAS SHALL BE BLASTED AND COVERED WITH BONDING EPOXY IMMEDIATELY PRIOR TO RECASTING CONCRETE.

1 V. EPOXIES:

ALL PLASTIC CONCRETE CAST AGAINST HARDENED CONCRETE SHALL BE BONDED WITH BONDING EPOXY. BONDING EPOXY SHALL BE SIKA ARMATEC 110 (OR APPROVED EQUIVALENT) UNLESS OTHERWISE NOTED ON PLANS.

ALL COSTS RELATED TO BONDING CONSTRUCTION JOINTS, AS SHOWN ON THESE CONTRACT DRAWINGS, SHALL BE INCLUDED IN COST BID FOR CLASS A4 CONCRETE.

VI. STRUCTURAL STEEL:

FINISH PAINT SHALL BE GREEN, 595–24449. USE SYSTEM A FOR "PREPARE & OVERCOAT EXISTING STRUCTURE" & SYSTEM B FOR "RECOAT EXISTING STRUCTURE."

REGARDLESS OF THE RELATIVE HUMIDITY UNDER THE BRIDGE DECK, THE CONTRACTOR WILL NOT BE PERMITTED TO APPLY PAINT TO STRUCTURAL STEEL WHEN THERE IS CONDENSATION ON THE STRUCTURAL STEEL OR WHEN IT IS RAINING.

ALL FIELD CONNECTIONS SHALL BE MADE WITH 7/8" DIA. A325 H.S.T.C. BOLTS, NUTS AND WASHERS.

TOP FLANGE AND WEBS OF BEAMS SHALL BE TRIMMED AT EXPANSION JOINTS AS NECESSARY TO PREVENT FLANGE END FROM EXTENDING OUT BEYOND EDGE OF CONCRETE DECK IN AREA UNDER EXPANSION JOINT.

1 VII. ASPHALT CONCRETE:

IN ORDER TO OBTAIN A SMOOTH RIDING SURFACE, THE ASPHALT CONCRETE SHALL BE PLACED AFTER CONSTRUCTION ~~OF EACH DECK STAGE (PAVE EACH APPROACH IMMEDIATELY PRIOR TO PLACING TRAFFIC ON BRIDGE).~~ THIS MATERIAL SHALL BE PLACED WITH AN ASPHALT PAVER. THE PAVEMENT ROLLERS AND OTHER PAVING EQUIPMENT SHALL NOT BE ALLOWED ON BRIDGE (TO PREVENT SPALLING OR CRACKING OF CONCRETE, PARTICULARLY AT THE ENDS OF DECK SLAB).

1 VIII. OPERATIONS:

THE CONTRACTOR SHALL PREPARE AREAS FOR SHOTCRETE SO THAT THEY WILL ALL BE READY FOR VIEWING AT ONE TIME ~~FOR EACH OF THE TWO STAGES.~~ CONTRACTOR SHALL THEN APPLY ALL SHOTCRETE ON BRIDGE IN ONE CONTINUOUS OPERATION/STAGE.

THE CONTRACTOR SHALL SCHEDULE INSTALLATION OF ELASTOMERIC SEALS IN EXPANSION JOINTS SO THAT ALL JOINTS WILL BE SEALED IN ONE CONTINUOUS OPERATION THE SAME DAY.

IX. BENCH MARK:

BENCHMARK #1

RAILROAD SPIKE SET IN POWER POLE #APCO 80–3572.
ELEV. = 600.51 (NAVD 1929)
8+73.9 19.5' LEFT

BENCHMARK #2

RAILROAD SPIKE SET IN POWER POLE #APCO 80–3553 IN TRAFFIC ISLAND. ELEV. = 612.37 (NAVD 1929)
12+81.9 21.8' LEFT

1

SHEET NO.	INDEX OF DRAWINGS
1	COVER SHEET
2	PLAN & ELEVATION
3	GENERAL NOTE, INDEX & ESTIMATED QUANTITIES
4	~~SEQUENCE OF CONSTRUCTION~~ DELETED
5	TRANSVERSE SECTION & DECK DRAIN DETAILS
6	DECK PLAN
7	DECK SLAB ELEVATIONS & DEFLECTION DIAGRAM
8	CAST–IN–PLACE CONCRETE PARAPET (F–SHAPE)
9	CAST–IN–PLACE CONCRETE PARAPET WITH SIDEWALK
10	PREFORMED ELASTOMERIC JOINT DETAILS
11	BEARING DETAILS
12	PEDESTRIAN FENCE DETAILS
13	WATERLINE SUPPORTS
14	PIER 1
15	PIER 2
16	PIER 1 & 2 DETERIORATED AREAS
17	ABUTMENT REPAIRS
18	REINFORCING STEEL SCHEDULE
19	RIPRAP REPAIR & SEQUENCE OF OPERATIONS
20	TRAFFIC CONTROL SIGNS
21	TRAFFIC CONTROL ~~STAGE 1~~
22	~~TRAFFIC CONTROL STAGE 2~~ DELETED
23	ROAD PLAN
24	GENERAL NOTE (ROADWAY)
25	TYPICAL SECTION
26	SUMMARY
27	PROFILE
28	CROSS SECTIONS – STA. 7+75 TO STA. 8+75
28	CROSS SECTIONS – STA. 9+00 TO STA. 9+75
30	CROSS SECTIONS – STA. 12+50 TO STA. 12+75

ESTIMATED QUANTITIES– (SEE SHEET 26 FOR ADDITIONAL QUANTITIES)

1

	CONCRETE CLASS A4 CU. YDS.	SHOTCRETE CLASS B SQ. FT.	SUBSTRUCTURE CONCRETE REPAIR SQ. FT.	ENCASE CAPS ⊕ LIN. FT.	ENCASE STEMS LIN. FT.	EPOXY COATED REINFORCING STEEL ⊕ LBS.	BRIDGE DECK GROOVING SQ. YDS. ⊕	CONCRETE PARAPET LIN. FT. ⊕	WATERPROOFING CLASS III SQ. YDS. ⊕	PREFORMED ELASTOMERIC JOINT SEALER L.F. ⊕ 3"	4"	SURFACE PREPARATION CLASS IV SQ. FT.	REPLACE BEARINGS EACH ⊕	REPLACE ANCHOR BOLTS EACH ⊕	PEDESTRIAN FENCE LIN. FT.	TRAFFIC BARRIER SERVICE CONCRETE PARAPET (SINGLE FACE) (MOD'FD.) LIN. FT.
SUPERSTRUCTURE	245.7	–	–	–	–	1 49,500	812	221	1103	54	54	–	–	–	442	456
ABUTMENT A	–	–	296	–	–	1,110	–	–	–	–	–	410	6	12	–	–
PIER 1	–	–	–	49.5	44.3	4,080	–	–	–	–	–	668	12	24	–	–
PIER 2	–	160	–	49.5	–	2,840	–	–	–	–	–	519	12	24	–	–
ABUTMENT B	–	–	298	–	–	1,110	–	–	–	–	–	390	6	12	–	–
TOTALS	245.7	160	594	99	44.3	1 58,640	812	442	1103	54	54	1987	36	72	442	456

⊕ – DENOTES ITEMS TO BE PAID FOR ON BASIS OF PLAN QUANTITIES IN ACCORDANCE WITH CURRENT ROAD AND BRIDGE SPECIFICATIONS.
COST OF DECK DRAINS (DRAIN ASSEMBLIES) SHALL BE INCLUDED IN THE CONTRACT UNIT PRICE FOR CONCRETE CLASS A4.

MOBILIZATION – LUMP SUM
REMOVE PORTION OF EXISTING STRUCTURE (STR. NO. 8010) – LUMP SUM
RECOAT EXISTING STRUCTURE – LUMP SUM
ENVIRONMENTAL PROTECTION, HEALTH & SAFETY – LUMP SUM
DISPOSAL OF MATERIAL, TYPE B – LUMP SUM
REPLACE WATERLINE SUPPORTS – LUMP SUM
JACKING & BLOCKING SUPERSTRUCTURE – LUMP SUM
REPAIR RIP RAP – LUMP SUM (35± SQ. FT. FOR ESTIMATING PURPOSES ONLY)

1 REV. 2/23/04

CADD REFERENCE NO. 02029GN.DWG

CRANEHILL DRIVE OVER IVY CREEK
GENERAL NOTE, INDEX & ESTIMATED QUANTITIES

COMMONWEALTH OF VIRGINIA
JAMES F. GRIZZLE, JR.
No. 35295
1-22-04
PROFESSIONAL ENGINEER

SCHWARTZ & ASSOCIATES, INC.
CONSULTING ENGINEERS
7331 TIMBERLAKE ROAD
LYNCHBURG, VA.

THE CITY OF LYNCHBURG, VIRGINIA
DEPT. OF PUBLIC WORKS
ENGINEERING

DESIGNED BY: JFG	DRAWN BY: JFG	CHECKED BY: RWS
SCALE: NONE		PROJECT NO.: 02021–B
COMM. NO. 03026	DATE: JANUARY 20, 2004	SHEET 3 OF 30

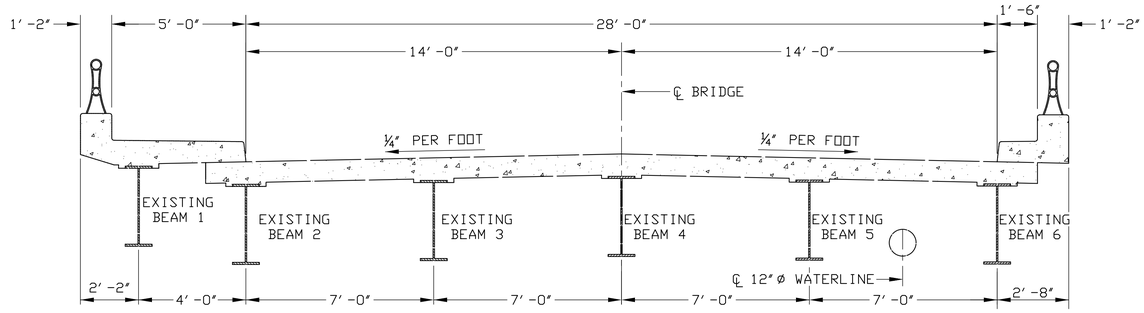

EXISTING TRANSVERSE SECTION

3/8″ = 1′-0″

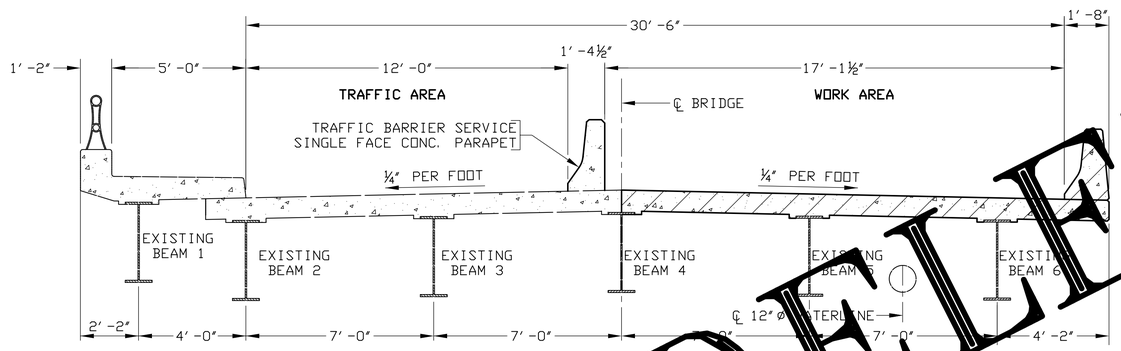

TRANSVERSE SECTION – STAGE 1

3/8″ = 1′-0″

NOTE:

TRAFFIC BARRIER SERVICE CONCRETE PARAPET (SINGLE FACE) SHALL BE STANDARD MB-10A EXCEPT AS MODIFIED ON THIS SHEET.

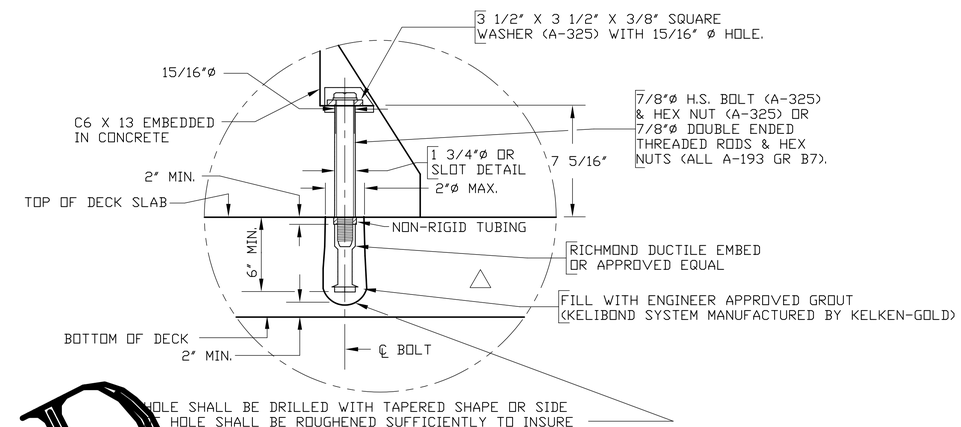

HOLE SHALL BE DRILLED WITH TAPERED SHAPE OR SIDE OF HOLE SHALL BE ROUGHENED SUFFICIENTLY TO INSURE GOOD BOND. ALL DEBRIS SHALL BE REMOVED PRIOR TO INSTALLATION. CONTRACTOR SHALL TAKE CARE NOT TO DAMAGE ANY EXISTING REINFORCING STEEL.

DETAIL "A"
(ANCHORAGE FOR SINGLE FACE CONCRETE PARAPET)

AFTER REMOVING "CONCRETE PARAPET TRAFFIC BARRIER", REMOVE 7/8″ø BOLTS OR THREADED RODS, REMOVE NON-RIGID TUBING AND SANDBLAST HOLES & FILL HOLES WITH ENGINEER APPROVED GROUT (KELIBOND SYSTEM MANUFACTURED BY KELKEN-GOLD)

ADHESIVE TYPE ANCHORS MAY BE USED IN LIEU OF THAT SHOWN IN DETAIL A, SUBJECT TO APPROVAL BY THE ENGINEER AND PROVIDED THAT, UPON TESTING, A MINIMUM PULLOUT OF 32,000 LBS. IS ATTAINED.

DETAIL "B" ANCHOR SHALL BE USED FOR STAGE 1.

USE DETAIL "A" ANCHOR FOR STAGE 2.

SEE STANDARD MB-10A FOR DETAILS NOT SHOWN.

DELETED

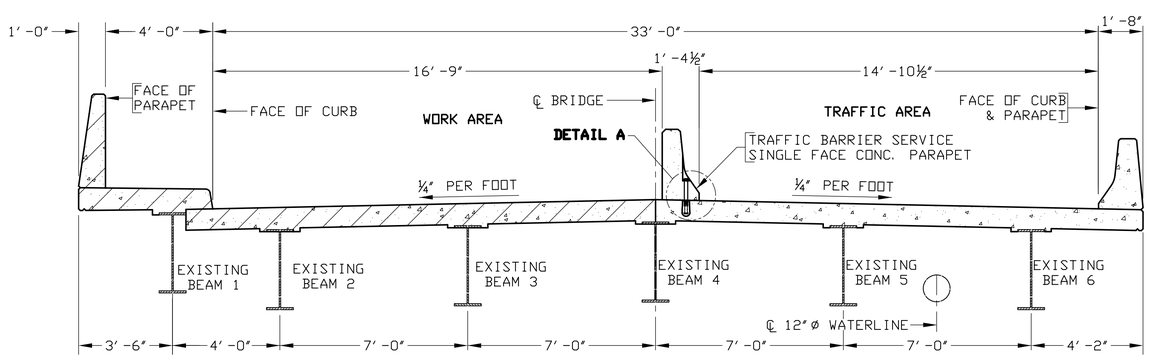

TRANSVERSE SECTION – STAGE 2

3/8″ = 1′-0″

NOTE:

CONSTRUCTION JOINT IN DECK SHALL BE VEE'D TO MINIMUM DEPTH SHOWN BELOW BY SANDBLASTING, BLOWN OUT AND CLEANED OF LOOSE AND/OR UNSOUND MATERIAL, THEN FILLED WITH EPOXY. THE EPOXY SHALL BE ALLOWED TO CURE COMPLETELY BEFORE REMOVING CONCRETE TRAFFIC BARRIER.

THIS SHEET DELETED – FEBRUARY 23, 2004

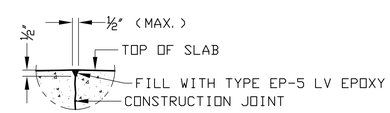

DETAIL E/54

NOT TO SCALE

VERTICAL FACE OF CONSTRUCTION JOINT SHALL BE MAULED TO COARSE AGGREGATE AND COATED WITH ARMATEC 110 BONDING EPOXY PRIOR TO PLACMENT OF STAGE 2 DECK CONCRETE.

1 REV. 2/23/04

CRANEHILL DRIVE OVER IVY CREEK
SEQUENCE OF CONSTRUCTION

COMMONWEALTH OF VIRGINIA
JAMES F. GRIZZLE, JR.
No. 35295
1-22-04
PROFESSIONAL ENGINEER

SCHWARTZ & ASSOCIATES, INC.
CONSULTING ENGINEERS
7331 TIMBERLAKE ROAD
LYNCHBURG, VA.

THE CITY OF LYNCHBURG, VIRGINIA
DEPT. OF PUBLIC WORKS
ENGINEERING

DESIGNED BY: JFG	DRAWN BY: JFG	CHECKED BY: RWS
SCALE: NONE		PROJECT NO.: 02021-B
COMM. NO. 03026	DATE: JANUARY 20, 2004	SHEET 4 OF 30

- DENOTES NEW CONSTRUCTION

CADD REFERENCE NO. 02029.DWG

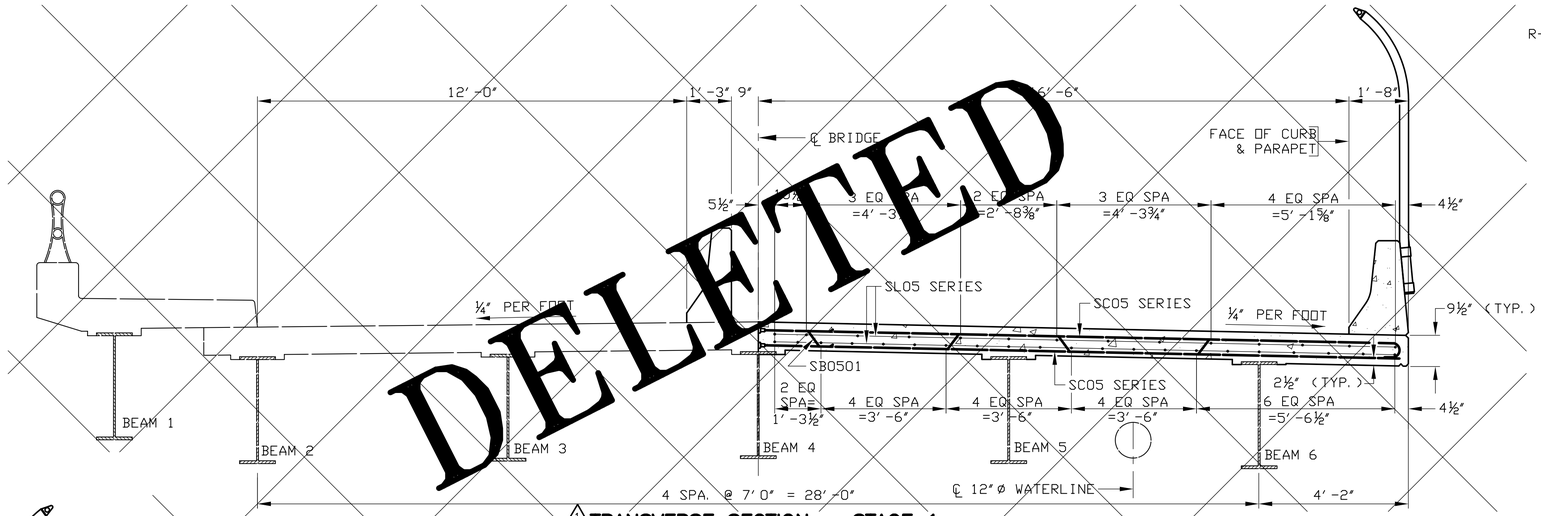

DELETED

1 TRANSVERSE SECTION – STAGE 1

1/2″ = 1′-0″

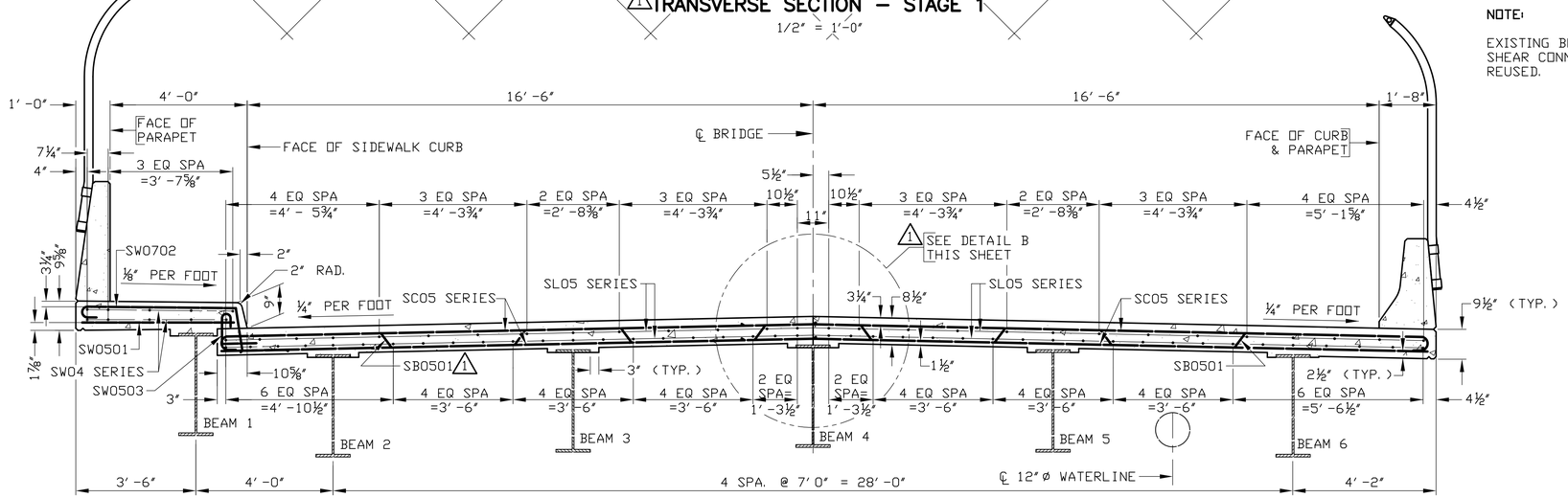

TRANSVERSE SECTION – STAGE 1

(EXISTING SHEAR CONNECTORS & DIAPHRAGMS NOT SHOWN)

1/2″ = 1′-0″

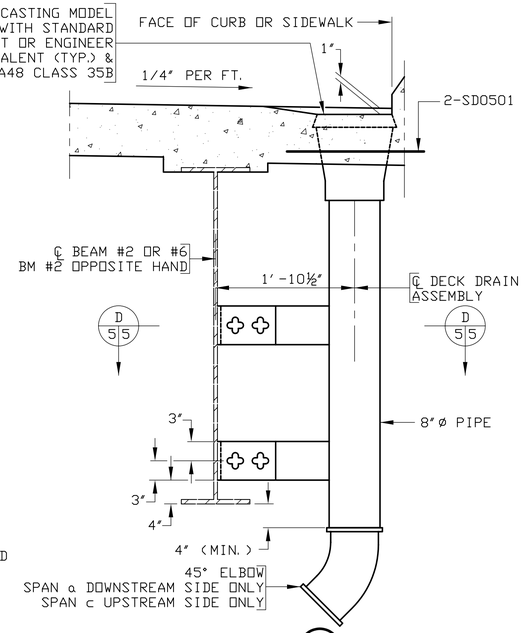

SECTION C 5 5

NOT TO SCALE

NOTE:

EXISTING BEAMS, DIAPHRAGMS AND SHEAR CONNECTORS SHALL BE REUSED.

NOTES:

FOR DECK DRAIN SPACINGS, SEE SHEET 2.

WASTE CONCRETE (NO REINFORCING STEEL EXPOSED) FROM THE STRUCTURE DEMOLITION SHALL BE PLACED ON THE GROUND UNDER EACH DECK DRAIN (NOT LOCATED OVER WATERWAY AND WHERE PRACTICAL), AS DIRECTED BY THE ENGINEER.

SHIFT LONGITUDINAL AND BEND OR ADJUST TRANSVERSE REINFORCING STEEL IN DECK TO CLEAR DECK DRAIN ASSEMBLY. REINFORCING STEEL SHALL NOT BE CUT.

ALL PIPES AND FITTINGS IN DRAIN ASSEMBLIES SHALL BE BLACK STEEL CONFORMING TO SECTION 232.02(4)a OF VDOT ROAD & BRIDGE SPECIFICATIONS. STEEL USED IN DRAIN PIPE BRACKETS SHALL BE ASTM A709, GRADE 36.

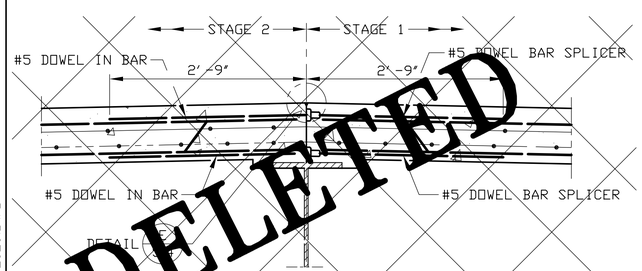

DELETED

1 DETAIL B

1″ = 1′-0″

NOTES:

ALL REINFORCING STEEL SHALL BE EPOXY COATED.

MECHANICAL DOWEL BAR SPLICERS FOR REBARS SHALL BE FROM RICHMOND SCREW ANCHOR CO. OR ENGINEER APPROVED EQUIVALENT.

ALL COSTS FOR DOWEL BAR SPLICERS SHALL BE PAID FOR IN UNIT PRICE BID FOR REINFORCING STEEL.

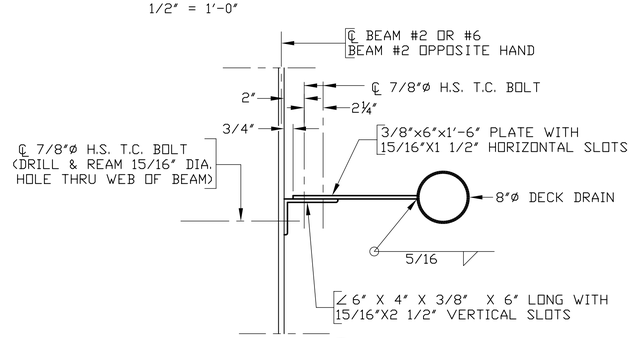

SECTION D 5 5

NOT TO SCALE

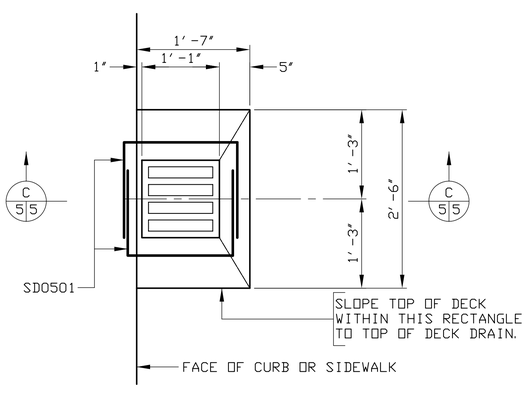

PART PLAN SHOWING DECK DRAIN

NOT TO SCALE

1 REV. 2/23/04

CRANEHILL DRIVE OVER IVY CREEK
TRANSVERSE SECTION & DECK DRAIN DETAILS

COMMONWEALTH OF VIRGINIA
James F. Grizzle Jr.
JAMES F. GRIZZLE, JR.
No. 35295
1-22-04
PROFESSIONAL ENGINEER

SCHWARTZ & ASSOCIATES, INC.
CONSULTING ENGINEERS

7331 TIMBERLAKE ROAD
LYNCHBURG, VA.

THE CITY OF LYNCHBURG, VIRGINIA
DEPT. OF PUBLIC WORKS
ENGINEERING

DESIGNED BY: JFG	DRAWN BY: JFG	CHECKED BY: RWS
SCALE: AS NOTED		PROJECT NO.: 02021-B
COMM. NO. 03026	DATE: JANUARY 20, 2004	SHEET 5 OF 30

CADD REFERENCE NO. 02029.DWG

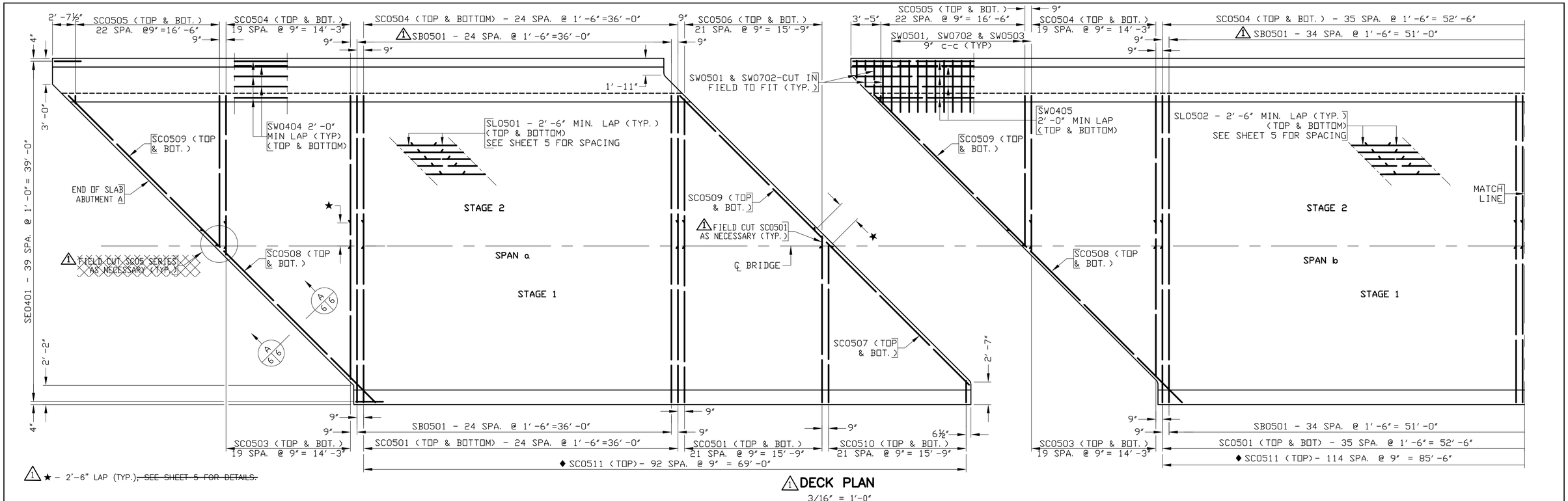

DECK PLAN

3/16" = 1'-0"

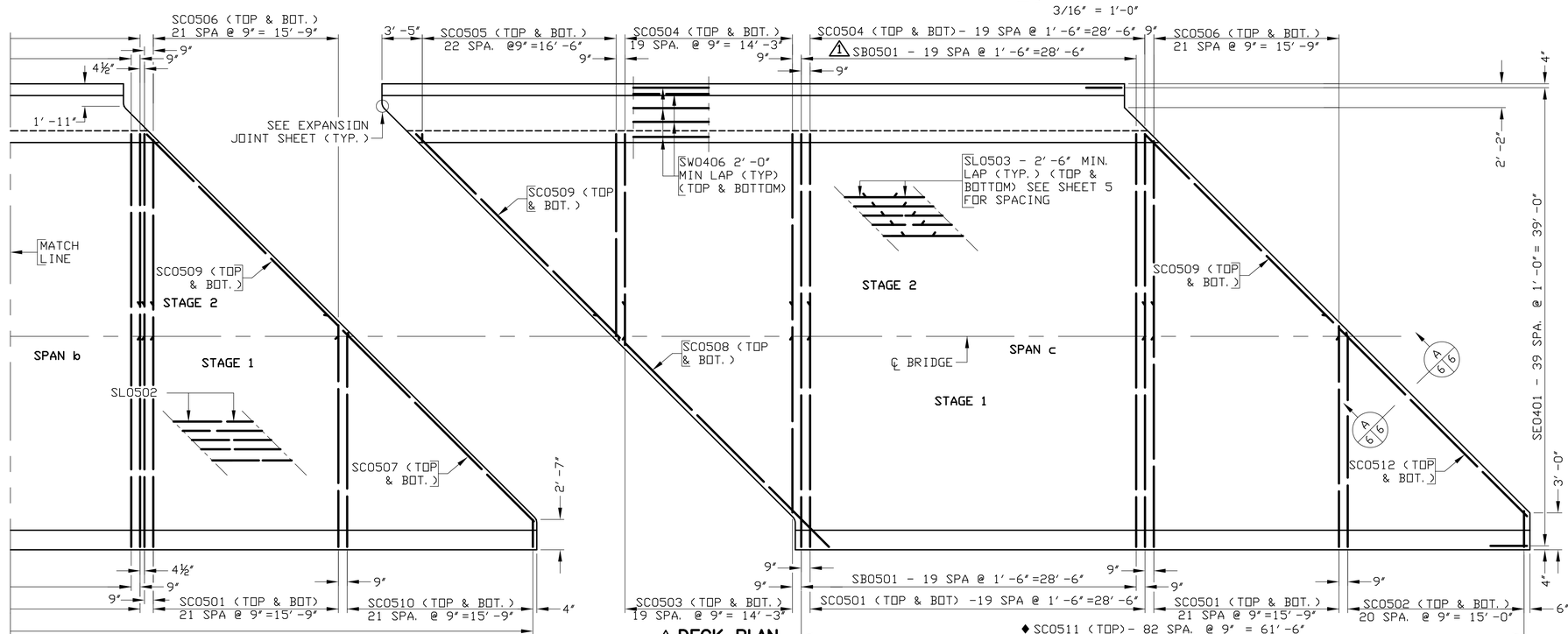

DECK PLAN

3/16" = 1'-0"

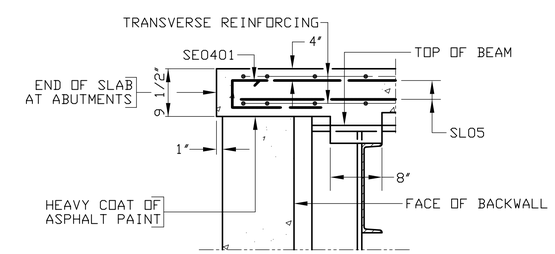

PART SECTION A/6.6

NOT TO SCALE

◆ - LAP WITH EVERY REBAR OVER EXTERIOR BEAM

CRANEHILL DRIVE OVER IVY CREEK
DECK PLAN

COMMONWEALTH OF VIRGINIA
JAMES F. GRIZZLE, JR.
No. 35295
1-22-04
PROFESSIONAL ENGINEER

SCHWARTZ & ASSOCIATES, INC.
CONSULTING ENGINEERS

7331 TIMBERLAKE ROAD
LYNCHBURG, VA.

THE CITY OF LYNCHBURG, VIRGINIA
DEPT. OF PUBLIC WORKS
ENGINEERING

DESIGNED BY: JFG	DRAWN BY: JFG	CHECKED BY: RWS
SCALE: AS NOTED		PROJECT NO.: 02021-B
DATE: JANUARY 20, 2004		SHEET 6 OF 30

COMM. NO. 03026

REV. 2/23/04

CADD REFERENCE NO. 02029.DWG

FHWA REGION	STATE	FEDERAL AID ROUTE	FEDERAL AID PROJECT	STATE ROUTE	STATE PROJECT	SHEET NO.
3	VA.					

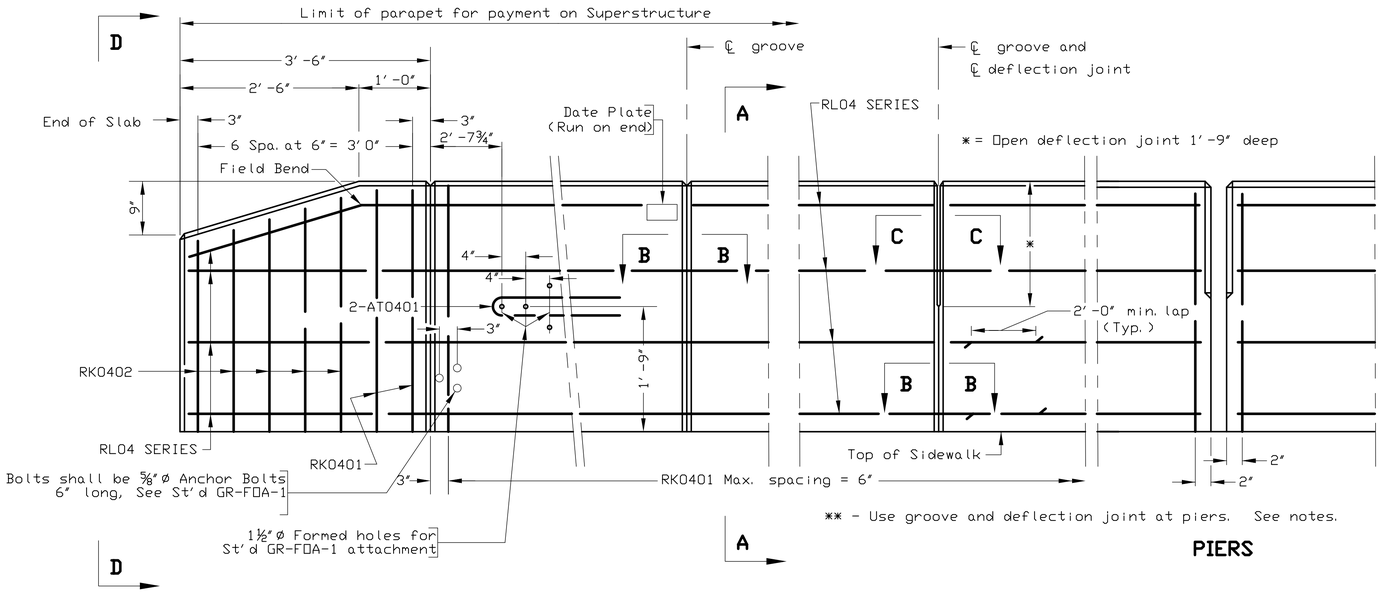

ELEVATION
Scale: 1" = 1'-0"

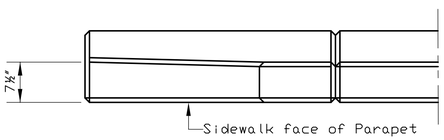

PART PLAN
Scale: 1" = 1'-0"

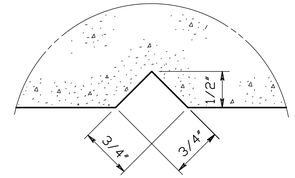

SECTION B-B
Full Scale

Groove detail for
both sides of parapet

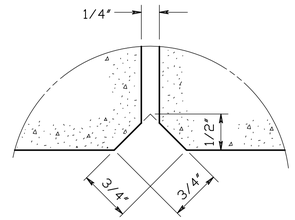

SECTION C-C
Full Scale

Deflection joint detail for
both sides of parapet

NOTES:

Rounded edges with 1" radius may be used in lieu of bevels along top of parapet.

RK0401 & RK0402 Reinforcing bars shall be galvanized. All other reinforcing bars shall be epoxy coated.

Detail shown at pier is applicable when joint is in slab. When slab is continuous over pier, use groove and deflection joint.

Spacing of grooves to be approximately 8'-0". If lighting standard is used (see Bridge Conduit System), groove shall be located approximately 4'-0" from ℄ light standard. Spacing of deflection joints shall not exceed three groove spaces.

Barrier delineator size, color, and spacing to be in accordance with the Specifications. Cost of delineator to be included in the price bid for parapet. Reflective surface of barrier delineator, in all instances, to be facing oncoming traffic.

The Contractor shall determine all dimensions and details necessary for installation.

All concrete shall be Class A4.

Terminal walls are detailed to take guardrail attachment GR-FDA-1.

Holes, where shown, shall be formed with sleeves of 1 1/2" dia. nominal PVC pipe & shall remain in place.

Bolts, where shown, shall be ⅝"ø expansion anchor bolts, 6" long to be drilled and installed when rub rail is attached.

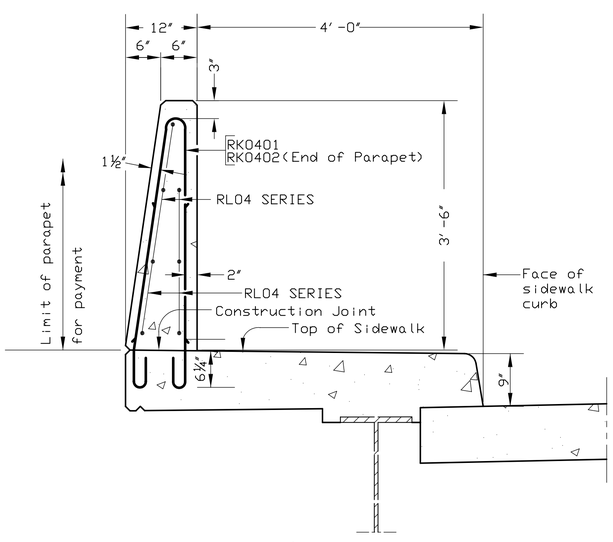

⚠1 SECTION A-A
Scale: 1" = 1'-0"

PEDESTRIAN FENCE NOT SHOWN

Gross concrete quantities (C.Y) = Lin. ft. x 0.097
All concrete above sidewalk

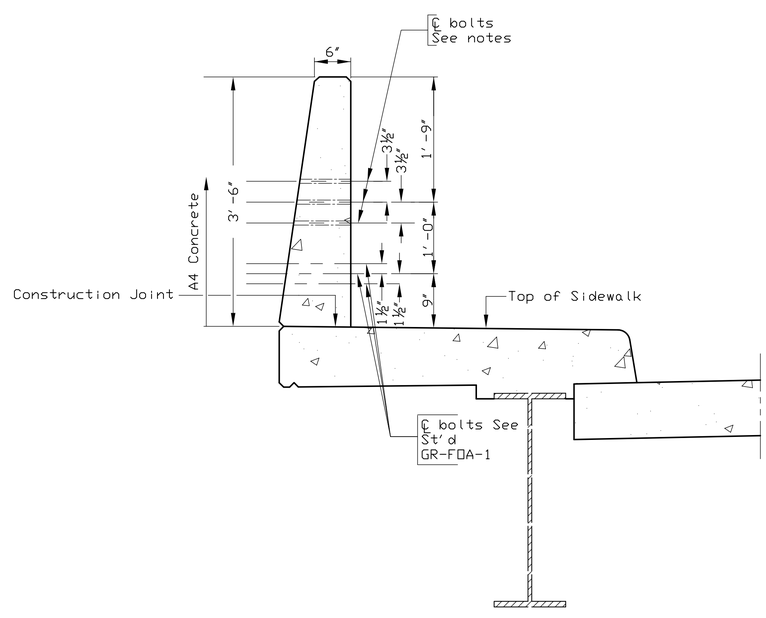

⚠1 SECTION D-D
Scale: 1" = 1'-0"

REINFORCING STEEL SCHEDULE

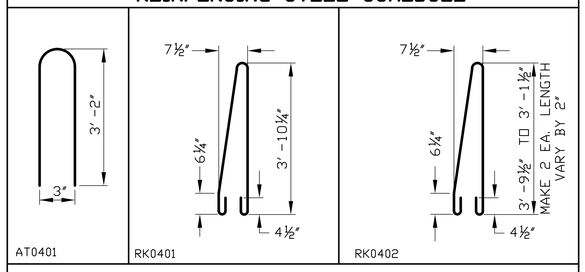

Dimensions in bending diagram are out to
out of bars, except as shown.

Mark	No.	Size	Length	Pin ø	Location
RK0401		#4	8'-8"	2"	Slab
RK0402	10	#4	7'-4" to 8'-8"	2"	Terminal Wall
RL04		#4		——	Parapet
AT0401	4	#4	6'-6"	2"	Terminal Wall

Cost of all bars listed in schedule to be included in price bid for parapet.

CRANEHILL DRIVE OVER IVY CREEK

No.	Description	Date
	Revisions	

COMMONWEALTH OF VIRGINIA
DEPARTMENT OF TRANSPORTATION

STRUCTURE AND BRIDGE DIVISION

CAST-IN-PLACE CONCRETE PARAPET WITH SIDEWALK

Designed: S&B DIV. JFG
Drawn: S&B DIV. JFG
Checked: S&B DIV. RWS

Date	Plan No.	Sheet No.
Jan. 20, 2004	BPB-6A	9 of 30

⚠1 REV. 2/23/04

© 1991, Commonwealth of Virginia

CADD BPB-6A 8-23-91 (MODIFIED 9/2003)

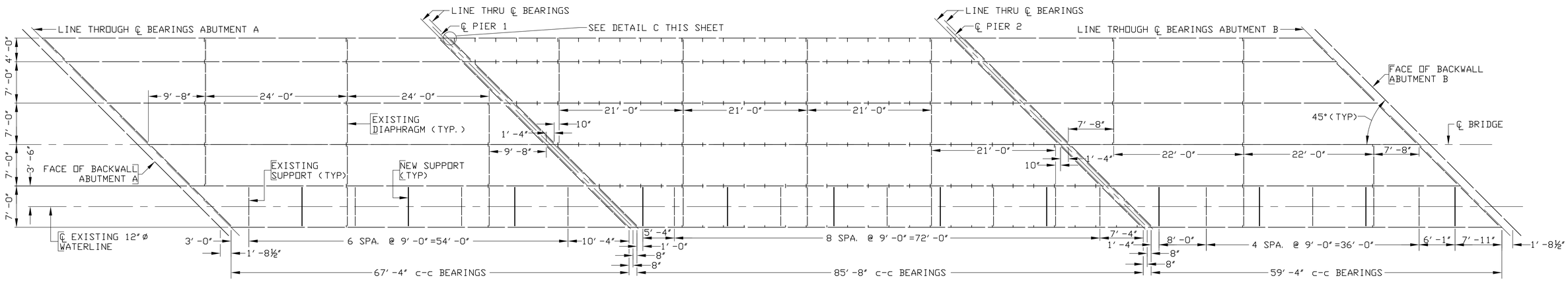

WATERLINE SUPPORTS

1/8" = 1'-0"

* - To be determined in field as directed by the Engineer.

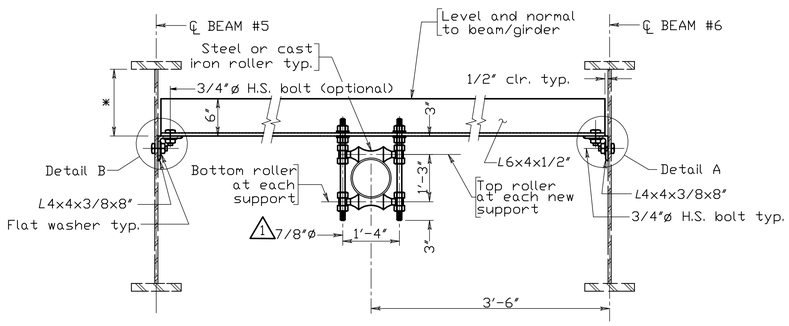

TYPICAL NEW SUPPORT DETAIL

Not to Scale

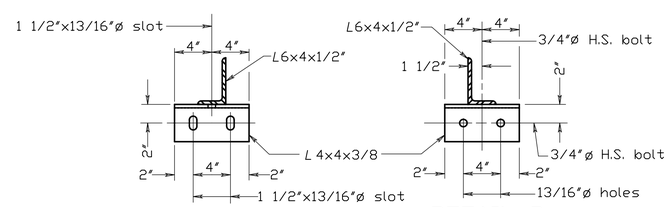

DETAIL A

Scale: 1 1/2" = 1'-0"

DETAIL B

Scale: 1 1/2" = 1'-0"

NOTE:

New Pipe support spacings may be adjusted up to 12" to allow proper installation.

Existing waterline shall be temporarily supported at each existing support angle to allow removal of the existing U-bolt and placement of the new roller support on existing angle all as approved by the Engineer. These new roller supports on existing angles shall be in place before raising existing beams.

1 All new pipe supports (6x4½" angles) to be added between existing support angles shall be ASTM A709 Grade 36 and shall be added after all jacking of beams and substructure repairs have been made.

Galvanization - Miscellaneous hardware (angles, rods, etc.), unless otherwise specified, shall be galvanized.

Insulation ~~will~~ ___ will not X be required.

Payment - Waterline Supports shall be paid for on a Lump Sum basis, wherein no measurement shall be made, and shall be paid for at the contract lump sum price, which price shall include furnishing and installing hangers, rollers, rods and miscellaneous hardware; all as detailed on this sheet included herein and within the pay limits shown thereon. Such price shall be full compensation for furnishing all materials, labor, tools, equipment and incidentals necessary to complete the work.

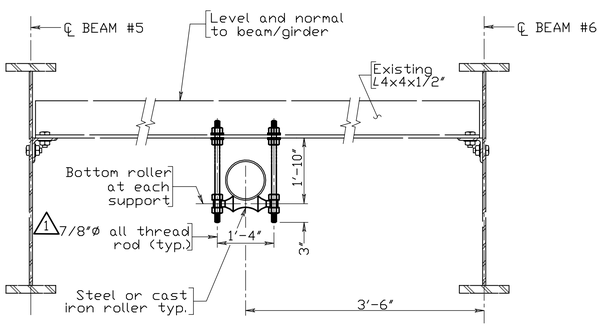

TYPICAL EXISTING SUPPORT ANGLE WITH NEW ROLLER SUPPORT

Not to Scale

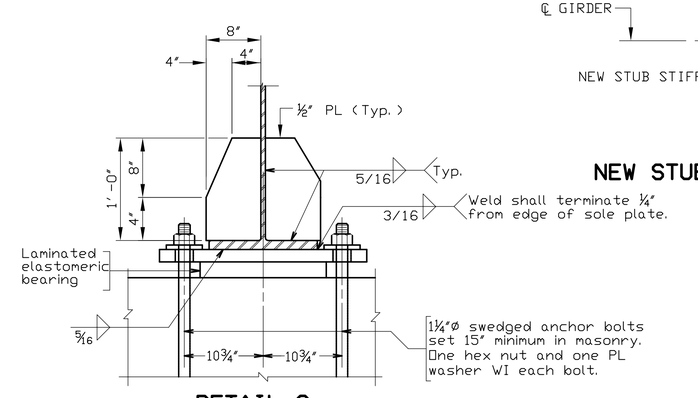

DETAIL C
SECTION AT GIRDER BEARING - SPAN B

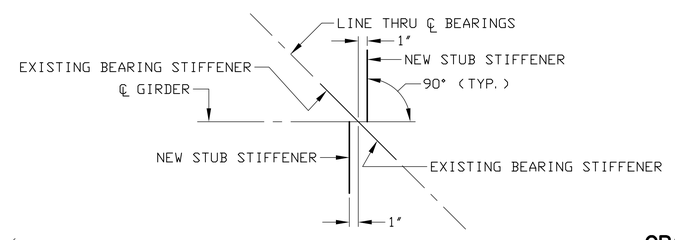

NEW STUB STIFFENER LAYOUT

NOT TO SCALE

CRANEHILL DRIVE OVER IVY CREEK WATERLINE SUPPORTS

1 REV. 2/23/04

COMMONWEALTH OF VIRGINIA
JAMES F. GRIZZLE, JR.
No. 35295
1-22-04
PROFESSIONAL ENGINEER

SCHWARTZ & ASSOCIATES, INC.
CONSULTING ENGINEERS
7331 TIMBERLAKE ROAD
LYNCHBURG, VA.

THE CITY OF LYNCHBURG, VIRGINIA
DEPT. OF PUBLIC WORKS
ENGINEERING

DESIGNED BY: JFG	DRAWN BY: JFG	CHECKED BY: RWS
SCALE: NONE		PROJECT NO.: 02021-B
COMM. NO. 03026	DATE: JANUARY 20, 2004	SHEET 13 OF 30

CADD REFERENCE NO. 02029.DWG

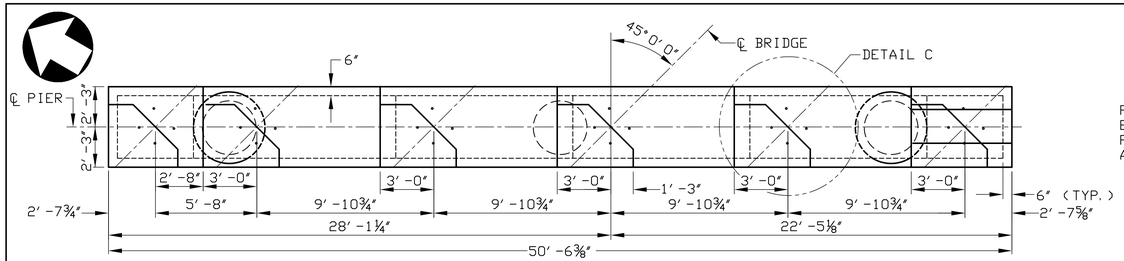

1 PLAN – PIER 1

1/4" = 1'-0"

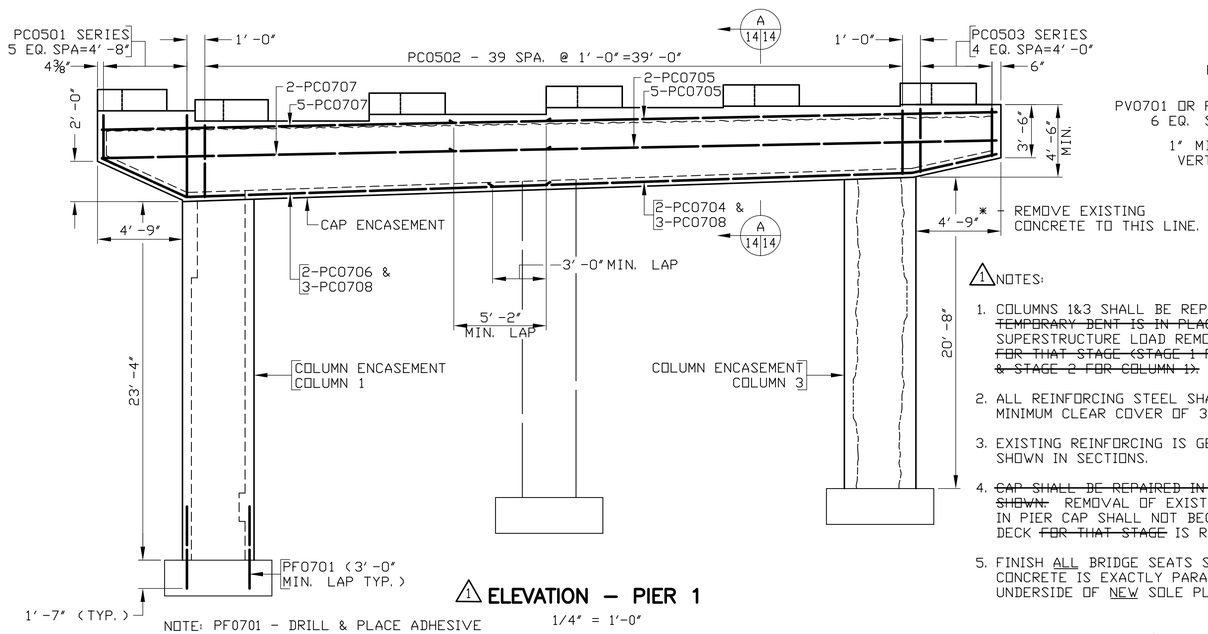

NOTE: PF0701 - DRILL & PLACE ADHESIVE ANCHOR INTO EXISTING CONCRETE FOOTINGS (TYP. FOOTING 1&3). TEST AS #6 ANCHOR.

1 ELEVATION – PIER 1

1/4" = 1'-0"

POSITION PV0701 AND PV0702 SO THAT 4 OF EACH FALLS OUTSIDE EXISTING CAP & DOES NOT REQUIRE CUTTING IN FIELD. 2 OF EACH THAT FALLS DIRECTLY BELOW EXISTING CAP WILL REQUIRE CUTTING IN FIELD AT BOTTOM OF EXISTING PIER CAP AFTER CONCRETE REMOVED.

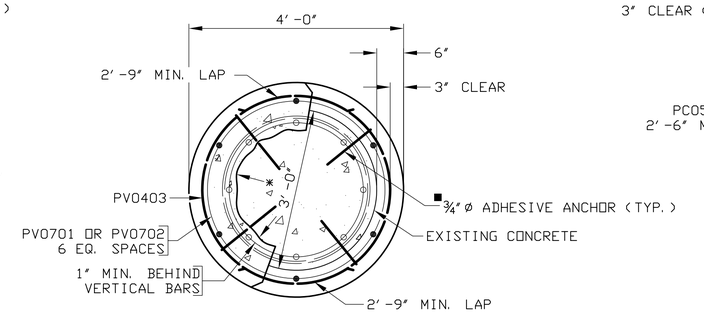

SECTION B–B

3/4" = 1'-0"

■ - ¾"ø ADHESIVE ANCHORS @ 2'-0" c-c. EMBED 6" INTO EXISTING CONCRETE AND 3" INTO NEW CONCRETE.

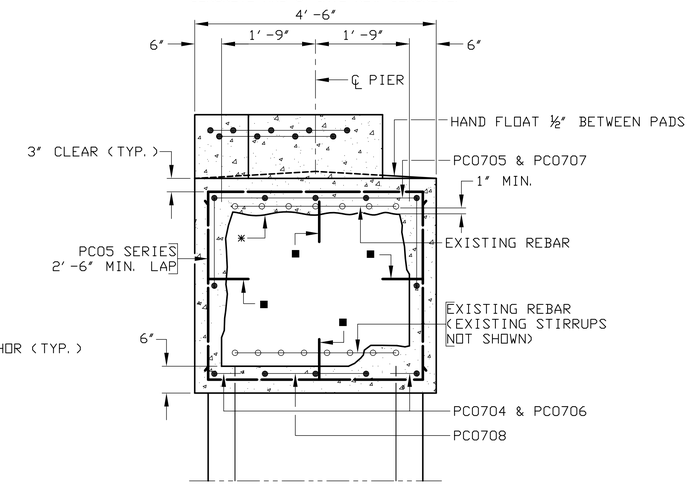

SECTION A 14 14

3/4" = 1'-0"

1 NOTES:

1. COLUMNS 1&3 SHALL BE REPAIRED WHILE ~~TEMPORARY BENT IS IN PLACE &~~ SUPERSTRUCTURE LOAD REMOVED FROM CAP ~~FOR THAT STAGE (STAGE 1 FOR COLUMN 3 & STAGE 2 FOR COLUMN 1).~~
2. ALL REINFORCING STEEL SHALL HAVE A MINIMUM CLEAR COVER OF 3".
3. EXISTING REINFORCING IS GENERALLY ONLY SHOWN IN SECTIONS.
4. ~~CAP SHALL BE REPAIRED IN 2 STAGES AS SHOWN.~~ REMOVAL OF EXISTING CONCRETE IN PIER CAP SHALL NOT BEGIN UNTIL THE DECK ~~FOR THAT STAGE~~ IS REMOVED.
5. FINISH ALL BRIDGE SEATS SO THAT CONCRETE IS EXACTLY PARALLEL TO UNDERSIDE OF NEW SOLE PLATES.

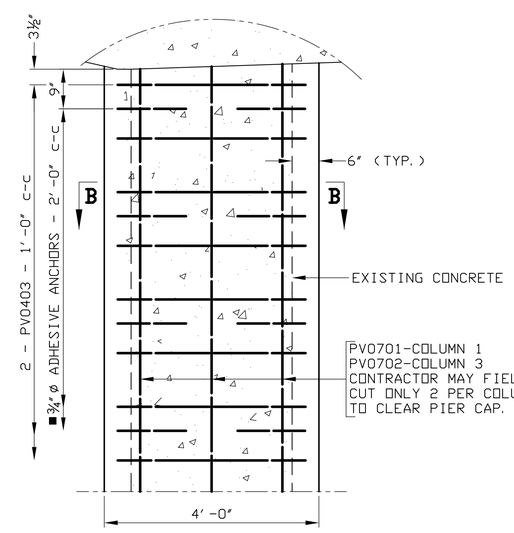

PARTIAL ELEVATION – COLUMN 1 & 3 ENCASEMENT

3/4" = 1'-0"

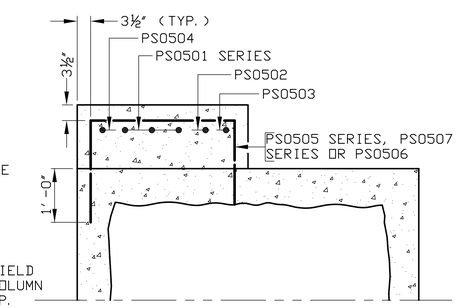

SECTION C 14 14

3/4" = 1'-0"

FOR SHOTCRETE - CLASS B NOTES, SEE SHEET 15.

ALL ANCHOR BOLT REPLACEMENTS SHALL BE COMPLETE PRIOR TO PLACEMENT OF CONCRETE FOR NEW SEATS.

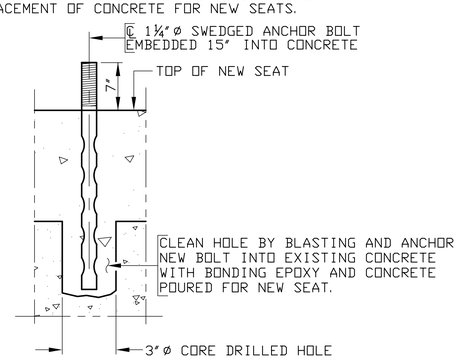

PART SECTION SHOWING ANCHOR BOLT REPLACEMENT DETAIL

NOT TO SCALE

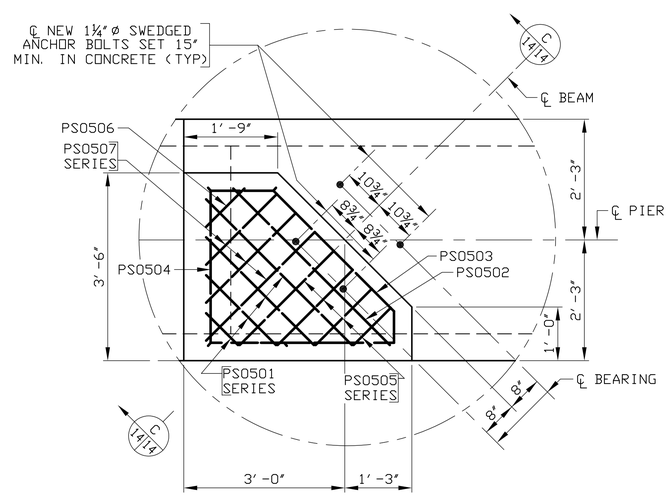

DETAIL C

3/4" = 1'-0"

(TYPICAL AT EACH PEDESTAL)

PIER 1 - SPAN a SEAT ELEVATIONS		PIER 1 - SPAN b SEAT ELEVATIONS	
BEAM	ELEVATIONS	BEAM	ELEVATIONS
1	597.71	1	596.59
2	597.13	2	596.01
3	597.50	3	596.39
4	597.88	4	596.76
5	597.96	5	596.84
6	598.04	6	596.93

1 REV. 2/23/04

COMMONWEALTH OF VIRGINIA
JAMES F. GRIZZLE, JR.
No. 35295
1-22-04
PROFESSIONAL ENGINEER

COMM. NO. 03026

CRANEHILL DRIVE OVER IVY CREEK
PIER 1

SCHWARTZ & ASSOCIATES, INC.
CONSULTING ENGINEERS

7331 TIMBERLAKE ROAD
LYNCHBURG, VA.

THE CITY OF LYNCHBURG, VIRGINIA
DEPT. OF PUBLIC WORKS
ENGINEERING

DESIGNED BY: JFG	DRAWN BY: JFG	CHECKED BY: RWS
SCALE: NONE		PROJECT NO.: 02021-B
DATE: JANUARY 20, 2004		SHEET 14 OF 30

CADD REFERENCE NO. 02029.DWG

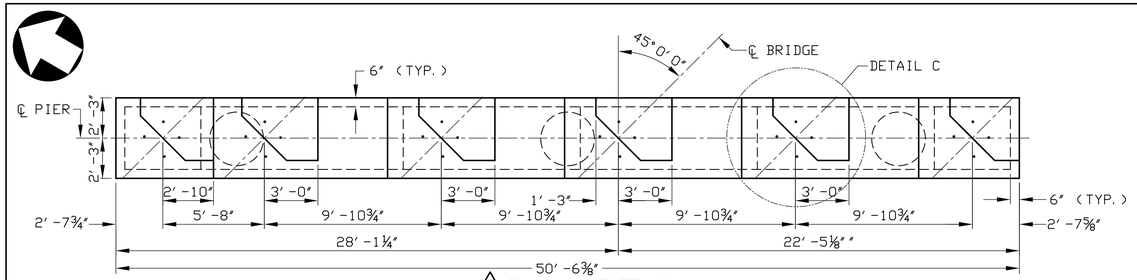

1 PLAN – PIER 2

1/4" = 1'-0"

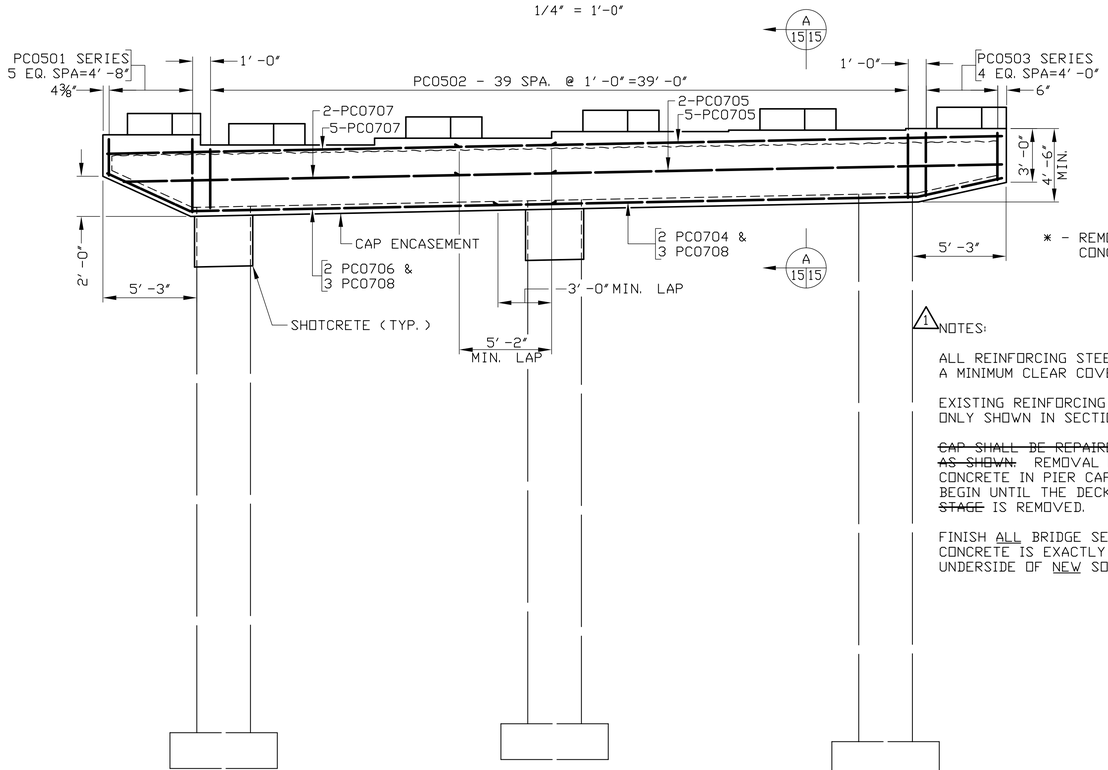

1 ELEVATION – PIER 2

1/4" = 1'-0"

* - REMOVE EXISTING CONCRETE TO THIS LINE.

1 NOTES:

ALL REINFORCING STEEL SHALL HAVE A MINIMUM CLEAR COVER OF 3".

EXISTING REINFORCING IS GENERALLY ONLY SHOWN IN SECTIONS.

~~CAP SHALL BE REPAIRED IN 2 STAGES AS SHOWN.~~ REMOVAL OF EXISTING CONCRETE IN PIER CAP SHALL NOT BEGIN UNTIL THE DECK ~~FOR THAT STAGE~~ IS REMOVED.

FINISH ALL BRIDGE SEATS SO THAT CONCRETE IS EXACTLY PARALLEL TO UNDERSIDE OF NEW SOLE PLATES.

■ - ¾"Ø ADHESIVE ANCHORS @ 2'-0" c-c. EMBED 6" INTO EXISTING CONCRETE AND 3" INTO NEW CONCRETE.

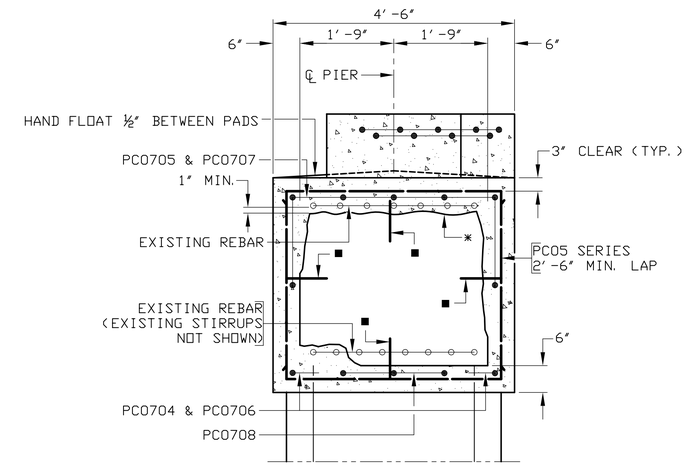

SECTION A 15 15

3/4" = 1'-0"

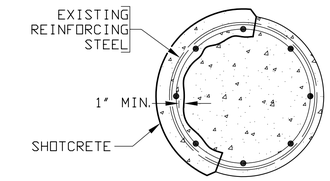

SECTION B–B

3/4" = 1'-0"

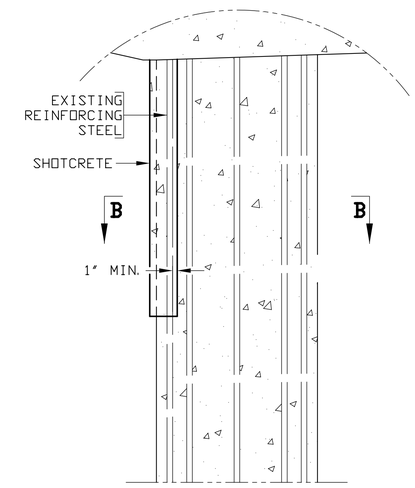

PARTIAL STEM ELEVATION

3/4" = 1'-0"

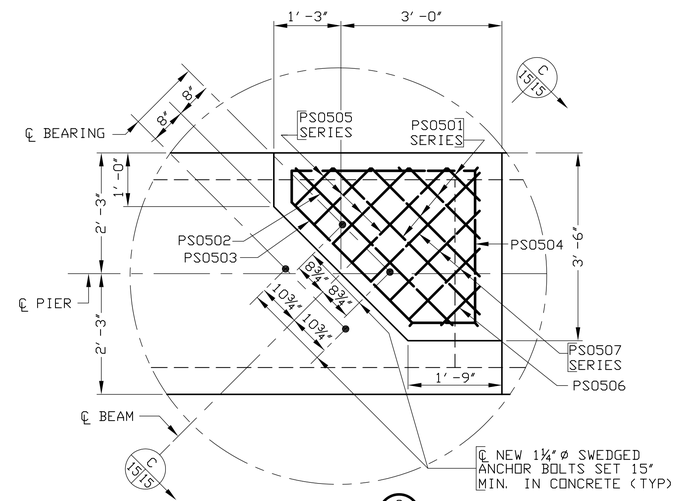

DETAIL C 15 15

3/4" = 1'-0"

SHOTCRETE - CLASS B:

LOCATIONS OF "SHOTCRETE CLASS B" WILL BE DETERMINED IN FIELD BY THE ENGINEER.

SHOTCRETE SHALL BE USED TO COVER EXPOSED REINFORCING STEEL IN AREAS WHERE REINFORCING STEEL IS CORRODED, AND OTHER AREAS OF CONCRETE DETERIORATION, AS DIRECTED BY THE ENGINEER.

ALL COLUMN PATCHING ON PIER 2 SHALL BE DONE WITH SHOTCRETE UNLESS OTHERWISE APPROVED BY THE ENGINEER.

REMOVE EXISTING CONCRETE TO SOUND CONCRETE AND IN AREAS OF CORRODED REINFORCING, AS DIRECTED BY THE ENGINEER, TAKING CARE NOT TO DAMAGE ANY EXISTING REINFORCING STEEL. SANDBLAST EXPOSED REINFORCING STEEL AND FACES OF EXISTING CONCRETE THAT WILL CONTACT THE PNEUMATIC MORTAR.

THERE SHALL BE A MINIMUM CLEAR COVER OF 3" ON ALL EXPOSED REINFORCING STEEL.

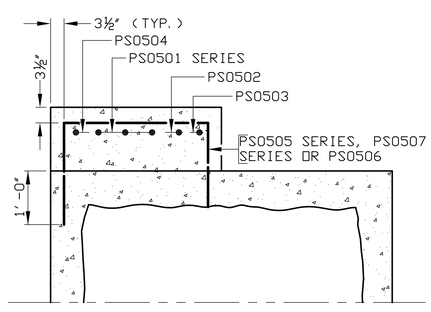

SECTION C 15 15

3/4" = 1'-0"

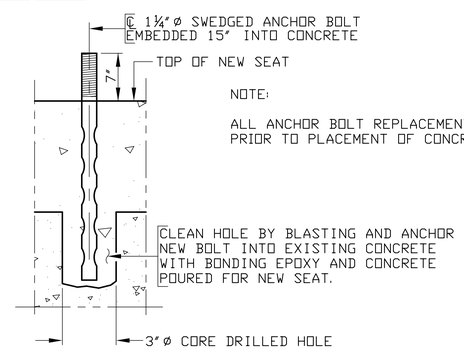

NOTE:

ALL ANCHOR BOLT REPLACEMENTS SHALL BE COMPLETE PRIOR TO PLACEMENT OF CONCRETE FOR NEW SEATS.

PART SECTION SHOWING ANCHOR BOLT REPLACEMENT DETAIL

NOT TO SCALE

PIER 2 - SPAN b SEAT ELEVATIONS		PIER 2 - SPAN c SEAT ELEVATIONS	
BEAM	ELEVATIONS	BEAM	ELEVATIONS
1	599.39	1	600.59
2	598.81	2	600.01
3	599.19	3	600.39
4	599.56	4	600.76
5	599.65	5	600.84
6	599.73	6	600.93

1 REV. 2/23/04

COMMONWEALTH OF VIRGINIA
JAMES F. GRIZZLE, JR.
No. 35295
1-22-04
PROFESSIONAL ENGINEER

COMM. NO. 03026

SCHWARTZ & ASSOCIATES, INC.
CONSULTING ENGINEERS

7331 TIMBERLAKE ROAD
LYNCHBURG, VA.

THE CITY OF LYNCHBURG, VIRGINIA
DEPT. OF PUBLIC WORKS
ENGINEERING

DESIGNED BY: JFG	DRAWN BY: JFG	CHECKED BY: RWS
SCALE: NONE	PROJECT NO.: 02021-B	
DATE: JANUARY 20, 2004	SHEET 15 OF 30	

CRANEHILL DRIVE OVER IVY CREEK
PIER 2

CADD REFERENCE NO. 02029.DWG

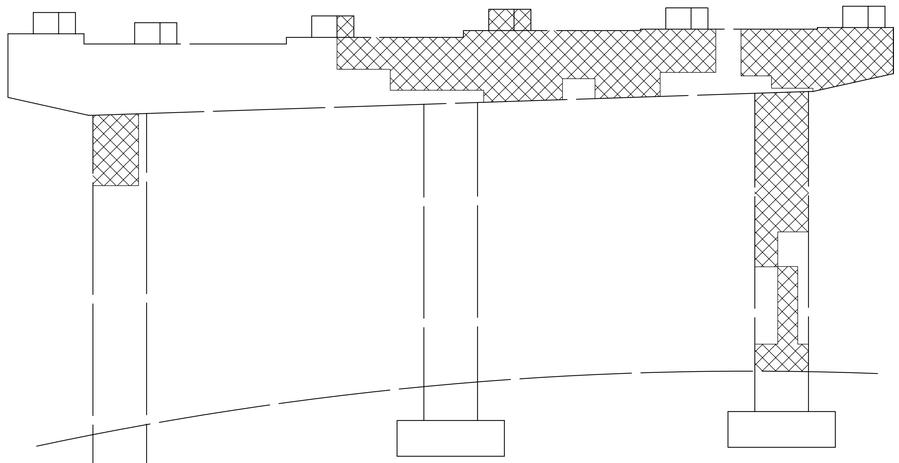

1 PIER 1 ELEVATION LOOKING EAST
1/4" = 1'-0"

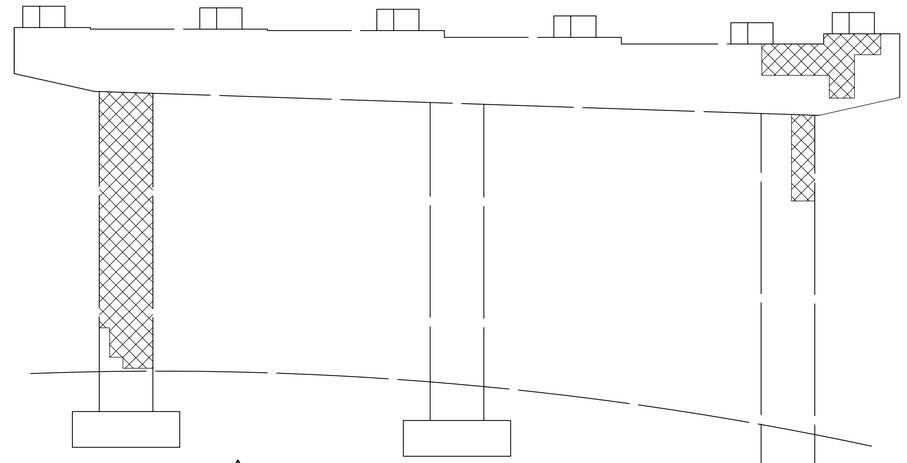

1 PIER 1 ELEVATION LOOKING WEST
1/4" = 1'-0"

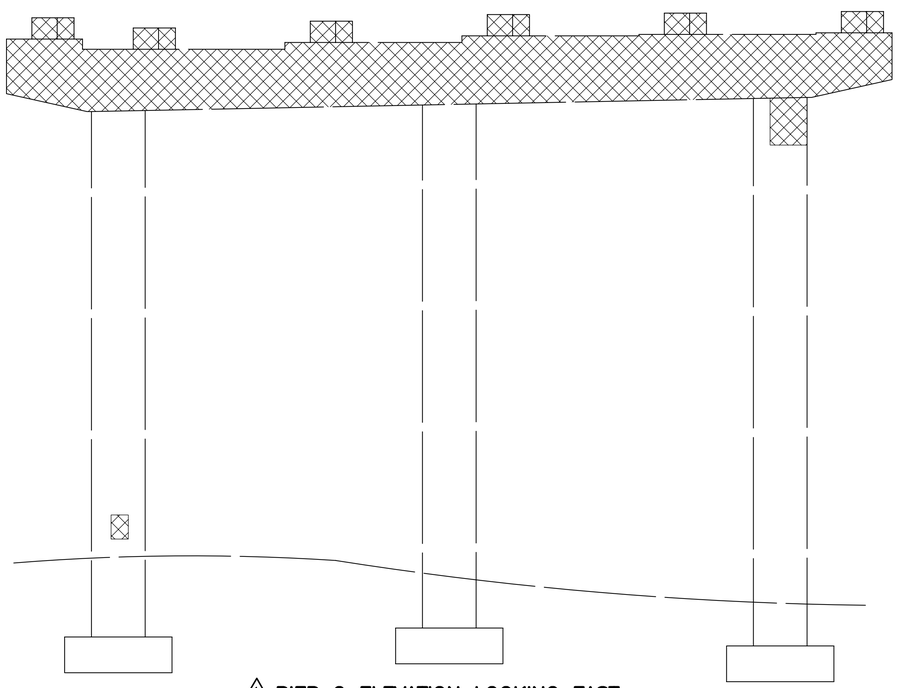

1 PIER 2 ELEVATION LOOKING EAST
1/4" = 1'-0"

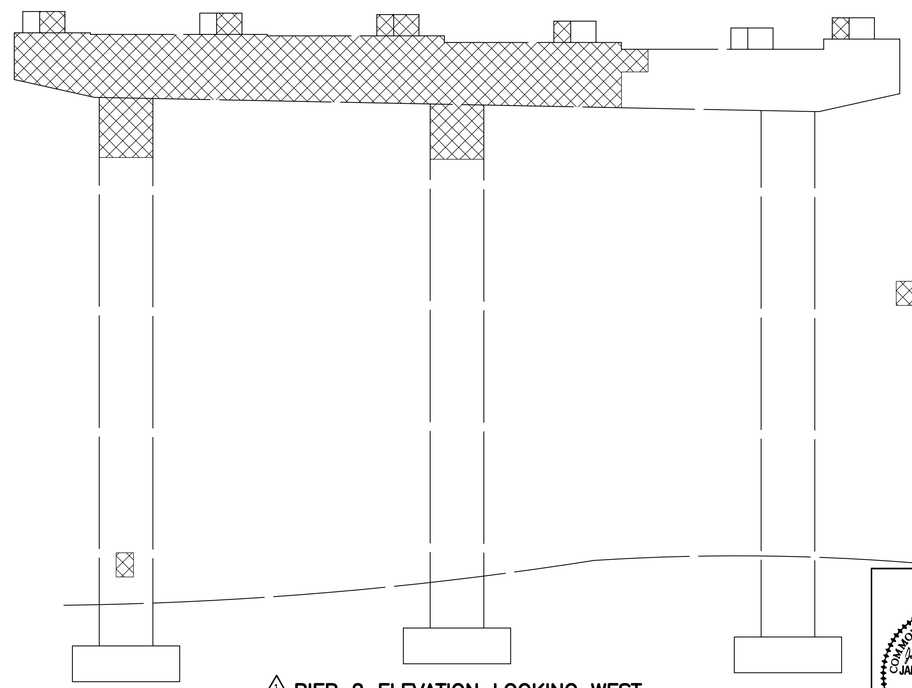

1 PIER 2 ELEVATION LOOKING WEST
1/4" = 1'-0"

- DENOTES AREAS OF DELAMINATED CONCRETE.
SEE SHEETS 14 & 15 FOR PIER REPAIR DETAILS.

CRANEHILL DRIVE OVER IVY CREEK
PIER 1 & 2 DETERIORATED AREAS

1 REV. 2/23/04

COMMONWEALTH OF VIRGINIA
JAMES F. GRIZZLE, JR.
No. 35295
1-22-04
PROFESSIONAL ENGINEER

COMM. NO. 03026

SCHWARTZ & ASSOCIATES, INC.
CONSULTING ENGINEERS

7331 TIMBERLAKE ROAD
LYNCHBURG, VA.

THE CITY OF LYNCHBURG, VIRGINIA
DEPT. OF PUBLIC WORKS
ENGINEERING

DESIGNED BY: JFG	DRAWN BY: JFG	CHECKED BY: RWS
SCALE: NONE	PROJECT NO.: 02021-B	
DATE: JANUARY 20, 2004	SHEET 16 OF 30	

CADD REFERENCE NO. 02029.DWG

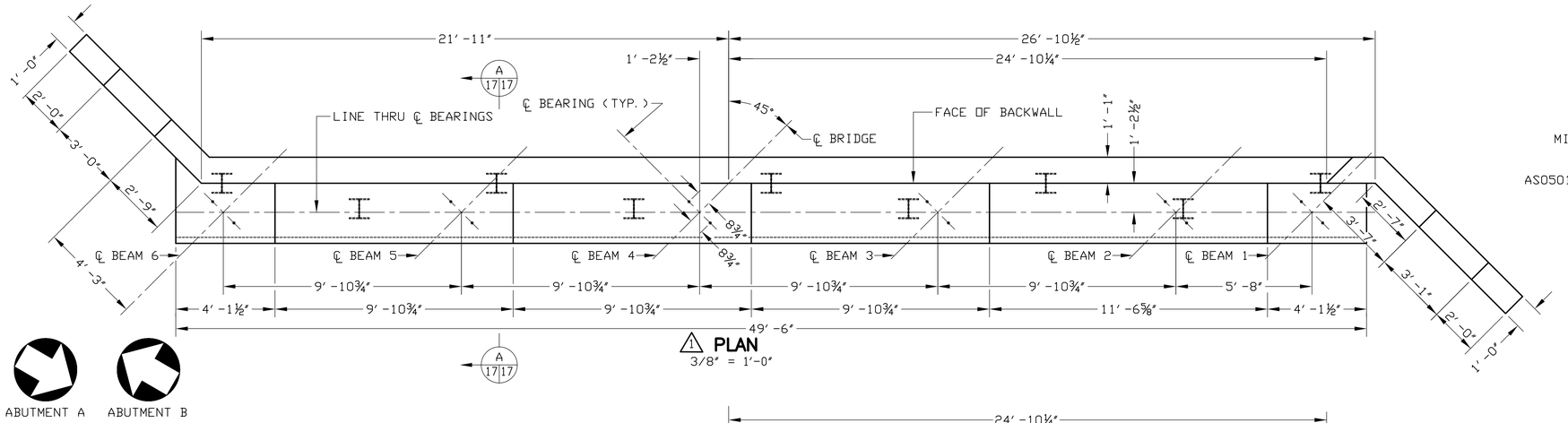

1 PLAN
3/8″ = 1′-0″

ABUTMENT A ABUTMENT B

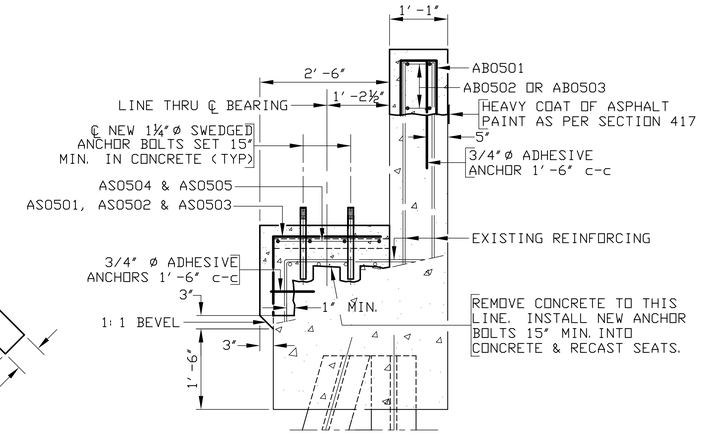

SECTION A 17|17
3/4″ = 1′-0″

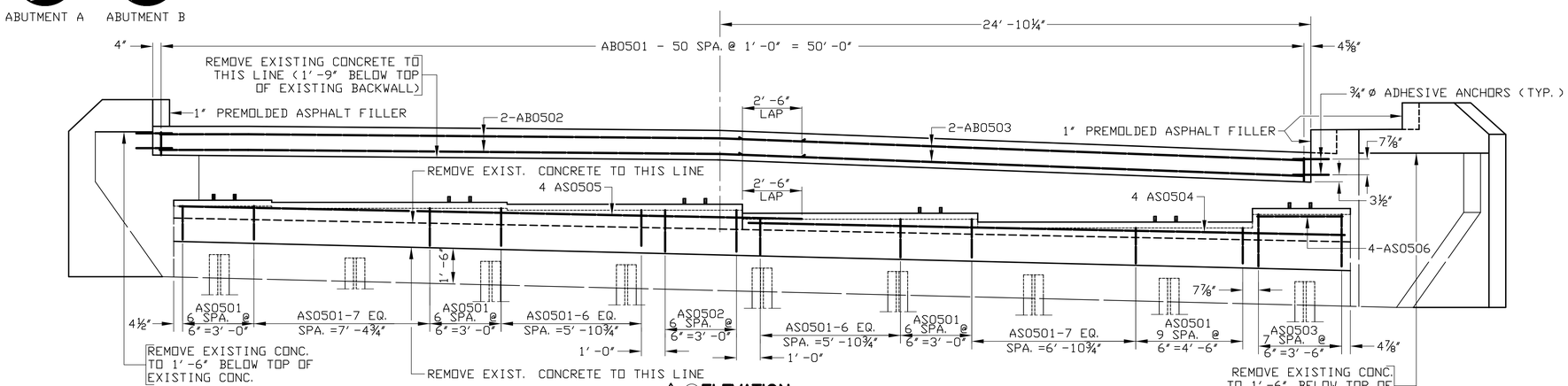

1 ⊙ ELEVATION
3/8″ = 1′-0″

⊙ ABUTMENT A AS SHOWN
ABUTMENT B OPPOSITE HAND

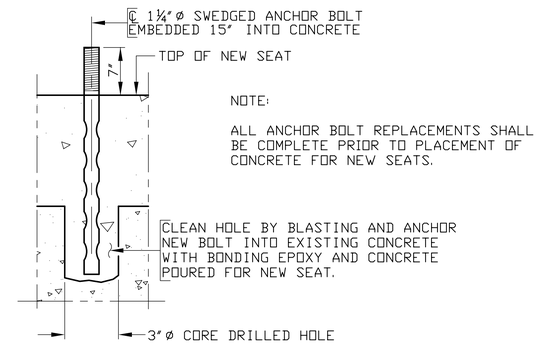

NOTE:

ALL ANCHOR BOLT REPLACEMENTS SHALL BE COMPLETE PRIOR TO PLACEMENT OF CONCRETE FOR NEW SEATS.

PART SECTION SHOWING ANCHOR BOLT REPLACEMENT DETAIL
NOT TO SCALE

NOTE:

ELEVATIONS SHOWN ARE ALONG BACK FACE OF BACKWALL. ELEVATIONS ON FRONT FACE MEASURED PARALLEL TO CENTERLINE BRIDGE ARE 0.05′ HIGHER ON ABUTMENT A AND 0.05′ LOWER ON ABUTMENT B.

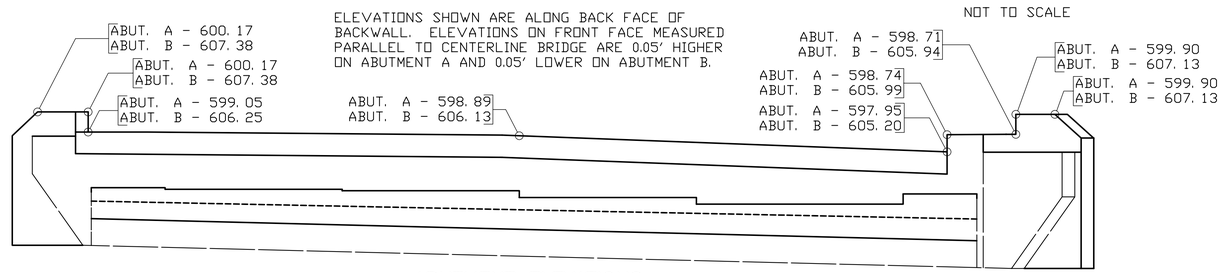

ABUTMENT ELEVATIONS
NOT TO SCALE

**-REMOVE EXISTING CONCRETE TO THIS LINE.

*-REMOVE EXISTING CONCRETE TO 1″ DEPTH.

◆-1″ PREMOLDED ASPHALT FILLER

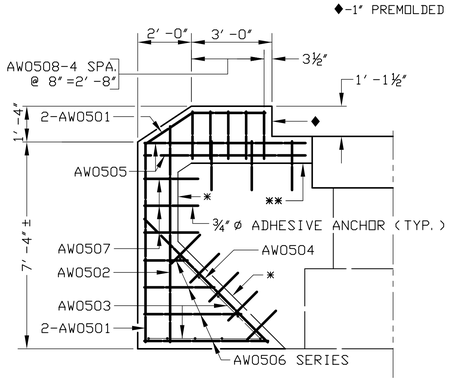

⊙ ELEVATION AT DOWNSTREAM WING
NOT TO SCALE

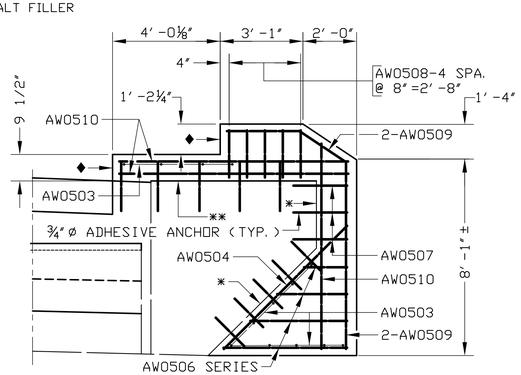

⊙ ELEVATION AT UPSTREAM WING
NOT TO SCALE

ABUTMENT A SEAT ELEVATIONS		ABUTMENT B SEAT ELEVATIONS	
BEAM	ELEVATIONS	BEAM	ELEVATIONS
1	595.51	1	602.53
2	594.92	2	601.95
3	595.30	3	602.33
4	595.67	4	602.70
5	595.76	5	602.78
6	595.84	6	602.87

CRANEHILL DRIVE OVER IVY CREEK ABUTMENT REPAIRS

1 REV. 2/23/04

COMMONWEALTH OF VIRGINIA
JAMES F. GRIZZLE, JR.
No. 35295
1-22-04
PROFESSIONAL ENGINEER

COMM. NO. 03026

SCHWARTZ & ASSOCIATES, INC.
CONSULTING ENGINEERS

7331 TIMBERLAKE ROAD
LYNCHBURG, VA.

THE CITY OF LYNCHBURG, VIRGINIA
DEPT. OF PUBLIC WORKS
ENGINEERING

DESIGNED BY: JFG	DRAWN BY: JFG	CHECKED BY: RWS
SCALE: NONE		PROJECT NO.: 02021-B
DATE: JANUARY 20, 2004		SHEET 17 OF 30

CADD REFERENCE NO. 02029.DWG

REINFORCING STEEL SCHEDULE

SUPERSTRUCTURE (COATED)

MARK	NO.	LENGTH	PIN Ø	LOCATION
SB0501	80	37′-0″	3 1/8″	DECK - TRANS. ~~STAGE 1~~
~~SB0502~~	~~80~~	~~17′-10 1/4″~~	~~3 1/8″~~	~~DECK - TRANS. STAGE 2~~
SC0501	294	20′-6″	-	DECK - TRANSVERSE
SC0502	42	17′-9″ TO 2′-10″	-	DECK - TRANSVERSE
SC0503	120	17′-10″ TO 3′-7″	-	DECK - TRANSVERSE
SC0504	282	17′-1″	-	DECK - TRANSVERSE
SC0505	138	17′-1″ TO 11″	-	DECK - TRANSVERSE
SC0506	132	16′-8″ TO 9″	-	DECK - TRANSVERSE
SC0507	4	22′-6″	-	DECK SLAB ENDS
SC0508	6	25′-5″	-	DECK SLAB ENDS
SC0509	12	24′-3″	-	DECK SLAB ENDS
SC0510	88	17′-9″ TO 2′-2″	-	DECK - TRANSVERSE
SC0511	291	6′-7″	3 1/8″	DECK OVERHANG
SC0512	2	21′-6″	-	DECK SLAB @ ABUT. B
SD0501	28	4′-4″	3 1/8″	DECK - AT DECK DRAINS
SE0401	80	4′-3″	2″	END OF DECK SLAB
SL0501	140	36′-6″	-	DECK - LONGITUDINAL
SL0502	140	44′-5″	-	DECK - LONGITUDINAL
SL0503	140	32′-6″	-	DECK - LONGITUDINAL
SW0501	292	4′-5″	-	SIDEWALK
SW0702	292	11′-5″	3 7/8″	DECK & SIDEWALK
SW0503	281	2′-4″	3 1/8″	DECK & SIDEWALK
SW0404	20	36′-8″	-	SIDEWALK - LONGITUDINAL
SW0405	20	44′-7″	-	SIDEWALK - LONGITUDINAL
SW0406	20	33′-8″	-	SIDEWALK - LONGITUDINAL

ABUTMENTS A & B (COATED)

MARK	NO.	LENGTH	PIN Ø	LOCATION
AB0501	102	2′-3 1/2″	2 1/2″	BACKWALL
AB0502	8	27′-2″	-	BACKWALL
AB0503	8	23′-7″	-	BACKWALL
AS0501	110	3′-4 3/4″	2 1/2″	SEATS
AS0502	14	3′-8 3/4″	2 1/2″	SEATS
AS0503	16	4′-1 3/4″	2 1/2″	SEATS
AS0504	8	25′-3″	-	SEATS
AS0505	8	26′-2″	-	SEATS
AS0506	8	3′-7″	-	SEATS
AW0501	4	11′-7″	2 1/2″	WINGS
AW0502	2	15′-6″	2 1/2″	WINGS
AW0503	48	5 1/2″	-	WINGS
AW0504	4	13′-0″	2 1/2″	WINGS
AW0505	4	12′-0″	2 1/2″	WINGS
AW0506	16	3′-4″ TO 9′-4″	2 1/2″	WINGS
AW0507	12	2′-6″	2 1/2″	WINGS
AW0508	20	3′-8″	2 1/2″	WINGS
AW0509	4	12′-3″	2 1/2″	WINGS
AW0510	6	17′-0″	2 1/2″	WINGS

PIERS (COATED)

MARK	NO.	LENGTH	PIN Ø	LOCATION
PC0501	24	8′-7″ TO 10′-7″	2 1/2″	PIER CAP
PC0502	160	10′-9″	2 1/2″	PIER CAP
PC0503	20	8′-8″ TO 9′-4″	2 1/2″	PIER CAP
PC0704	4	28′-11″	5 1/4″	PIER CAP
PC0705	14	31′-10″	-	PIER CAP
PC0706	4	24′-5″	5 1/4″	PIER CAP
PC0707	14	24′-5″	-	PIER CAP
PC0708	12	16′-0″	-	PIER CAP
PF0701	12	4′-10″	-	PIER FOOTING
PS0501	48	3′-9″ TO 6′-9″	2 1/2″	PIER SEAT
PS0502	12	7′-5″	2 1/2″	PIER SEAT
PS0503	12	8′-1 1/2″	2 1/2″	PIER SEAT
PS0504	12	4′-9″	2 1/2″	PIER SEAT
PS0505	48	4′-4″ TO 5′-10″	2 1/2″	PIER SEAT
PS0506	12	4′-0″	2 1/2″	PIER SEAT
PS0507	36	4′-8″ TO 5′-8″	2 1/2″	PIER SEAT
PV0701	6	26′-4″	-	PIER COLUMN
PV0702	6	23′-8″	-	PIER COLUMN
PV0403	90	8′-5″	3′-4″	PIER COLUMN

NOTE: DIMENSIONS SHOWN IN BENDING DIAGRAM ARE OUT-TO-OUT OF BARS UNLESS OTHERWISE NOTED.

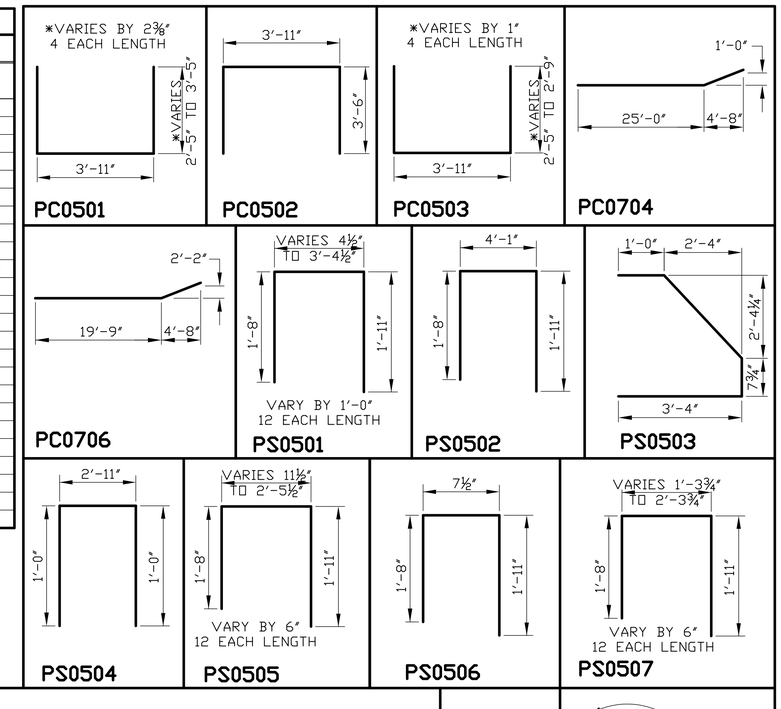

BENDING DIAGRAM

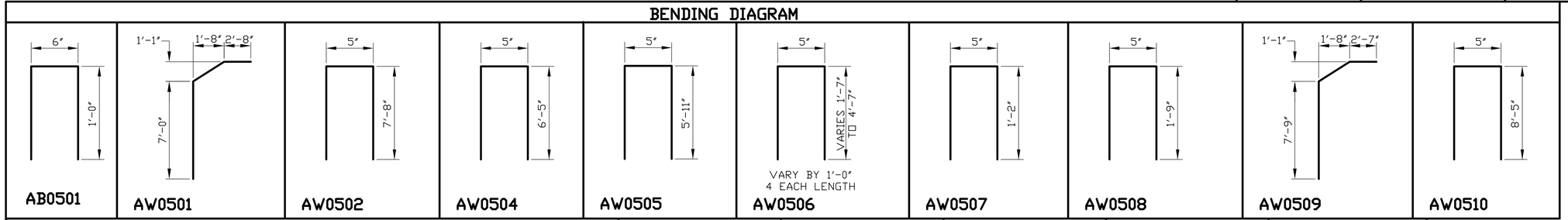

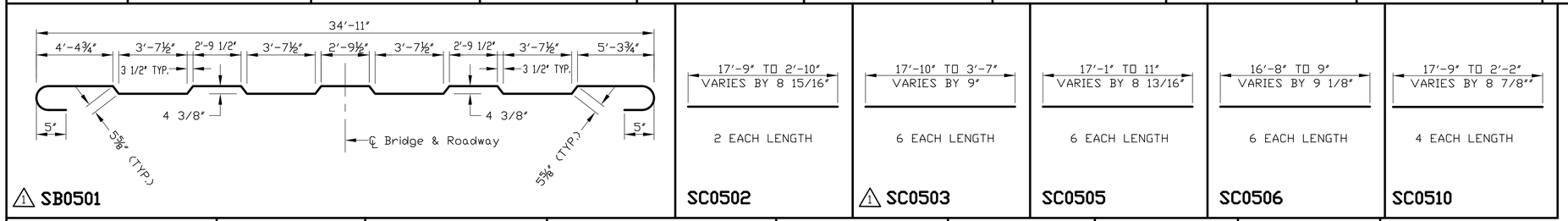

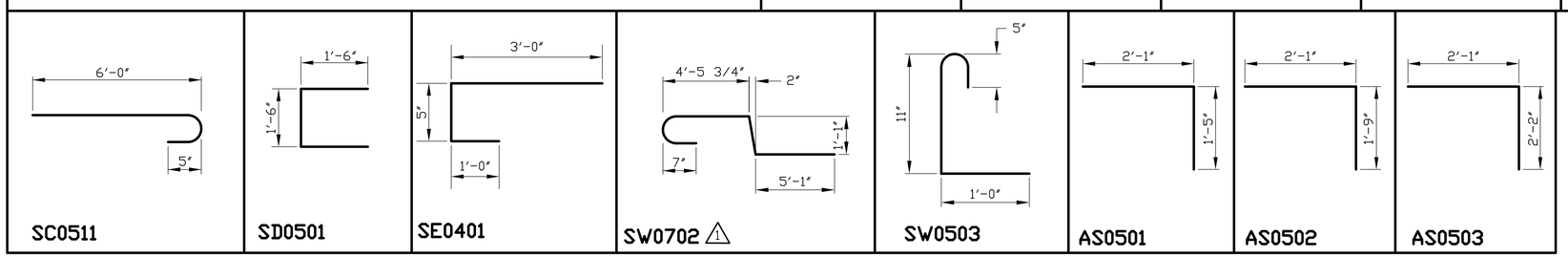

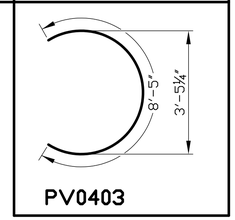

CRANEHILL DRIVE OVER IVY CREEK
REINFORCING STEEL SCHEDULE

COMMONWEALTH OF VIRGINIA
JAMES F. GRIZZLE, JR.
No. 35295
1-22-04
PROFESSIONAL ENGINEER

SCHWARTZ & ASSOCIATES, INC.
CONSULTING ENGINEERS

7331 TIMBERLAKE ROAD
LYNCHBURG, VA.

THE CITY OF LYNCHBURG, VIRGINIA
DEPT. OF PUBLIC WORKS
ENGINEERING

DESIGNED BY: JFG	DRAWN BY: JFG	CHECKED BY: RWS
SCALE: NONE		PROJECT NO.: 02021-B
COMM. NO. 03026	DATE: JANUARY 20, 2004	SHEET 18 OF 30

1 REV. 2/23/04

CADD REFERENCE NO. 02029.DWG

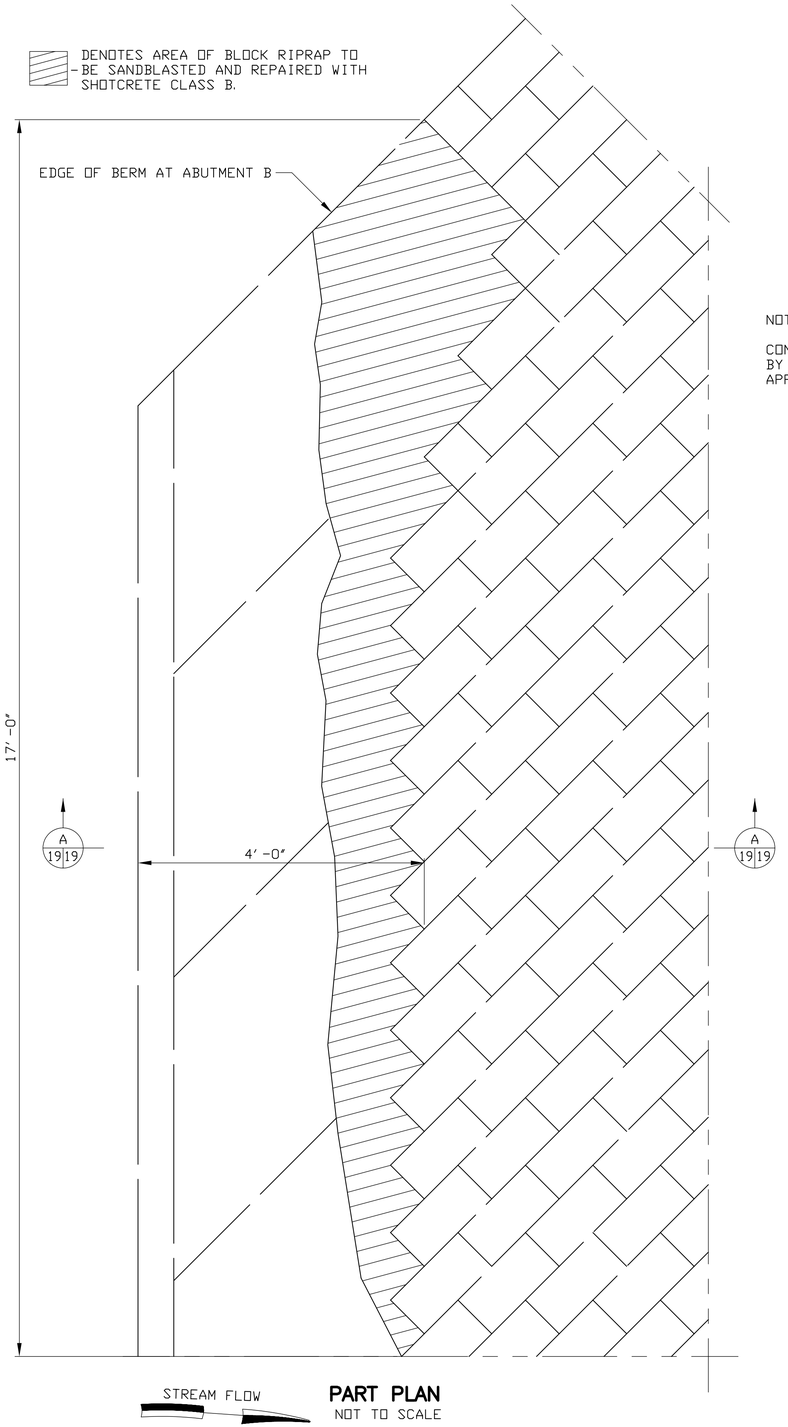

PART PLAN
NOT TO SCALE

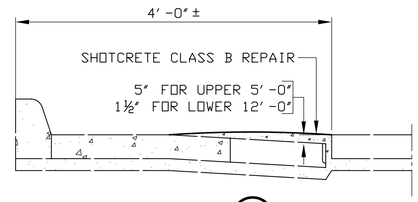

SECTION A 19 19
NOT TO SCALE

NOTE:

CONTRACTOR SHALL REMOVE ALL LOOSE MATERIAL BY BLOWING WITH COMPRESSED AIR BEFORE APPLICATION OF SHOTCRETE CLASS B.

1 SEQUENCE OF OPERATIONS

1. ERECT ALL CONSTRUCTION SIGNS.
2. REMOVE DECK.
3. TEMPORARILY SUPPORT EXISTING WATERLINE, REMOVE U-BOLTS AND INSTALL NEW ROLLER SUPPORTS ON EXISTING ANGLES.
4. JACK AND BLOCK BEAMS (WITH BEAMS SUPPORTED FROM GROUND OR PIER FOOTINGS). CONTRACTOR SHALL LOOSEN WATERLINE HANGERS DURING JACKING OPERATION. HOWEVER, HANGERS SHALL BE KEPT SNUG AT ALL TIMES.
5. ENCASE PIER STEM AND ADD NEW STUB STIFFENERS IN SPAN B AND NEW SOLE PLATES TO ALL BEAMS.
6. SHOTCRETE STEMS NOT REQUIRING ENCASEMENT.
7. ENCASE PIER CAPS AND CAST ABUTMENT CONCRETE.
8. PLACE ELASTOMERIC BEARING PADS AND LOWER BEAMS ONTO NEW BEARING PADS.
9. CAST DECK, SIDEWALK AND PARAPETS.
10. SEAL EXPANSION JOINTS AT PIERS.
11. CLEAN AND PAINT STRUCTURAL STEEL.
12. COMPLETE BRIDGE DECK GROOVING.
13. COMPLETE WATERPROOFING CLASS III.
14. COMPLETE ALL OTHER ITEMS OF WORK ON BRIDGE.
15. COMPLETE ALL ROADWAY ITEMS.
16. REMOVE ALL TRAFFIC CONTROL AND OPEN BRIDGE FULLY.

UNLESS OTHERWISE APPROVED OR DIRECTED (IN WRITING), THE CONTRACTOR SHALL PLAN AND PROSECUTE THE WORK IN ACCORDANCE WITH THE ABOVE NOTED SEQUENCE OF OPERATIONS.

1 REV. 2/23/04

CRANEHILL DRIVE OVER IVY CREEK
RIPRAP REPAIRS & SEQUENCE OF OPERATIONS

COMMONWEALTH OF VIRGINIA
JAMES F. GRIZZLE, JR.
No. 35295
1-22-04
PROFESSIONAL ENGINEER

SCHWARTZ & ASSOCIATES, INC.
CONSULTING ENGINEERS

7331 TIMBERLAKE ROAD
LYNCHBURG, VA.

THE CITY OF LYNCHBURG, VIRGINIA
DEPT. OF PUBLIC WORKS
ENGINEERING

DESIGNED BY: JFG	DRAWN BY: JFG	CHECKED BY: RWS
SCALE: NONE		PROJECT NO.: 02021-B
COMM. NO. 03026	DATE: JANUARY 20, 2004	SHEET 19 OF 30

CADD REFERENCE NO. 02029.DWG

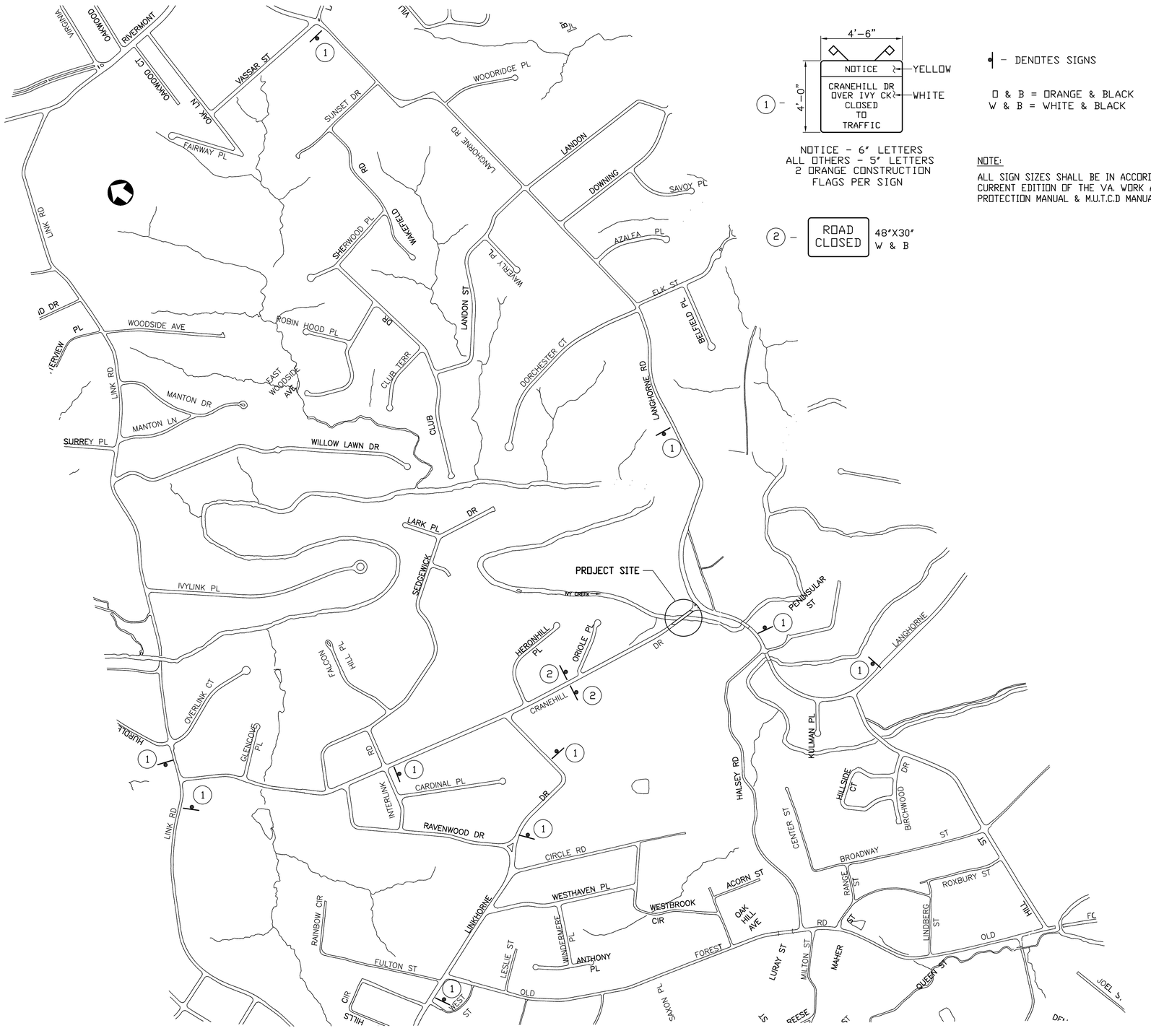

1 TRAFFIC CONTROL SIGNS

NOT TO SCALE

NOTICE - 6" LETTERS
ALL OTHERS - 5" LETTERS
2 ORANGE CONSTRUCTION
FLAGS PER SIGN

2 - ROAD CLOSED 48"X30" W & B

- DENOTES SIGNS

O & B = ORANGE & BLACK
W & B = WHITE & BLACK

NOTE:

ALL SIGN SIZES SHALL BE IN ACCORDANCE WITH CURRENT EDITION OF THE VA. WORK AREA PROTECTION MANUAL & M.U.T.C.D MANUAL.

NOTES FOR TRAFFIC CONTROL

1. SIGN SPACINGS SHALL BE ADJUSTED TO FIT FIELD CONDITIONS, AS DIRECTED BY THE ENGINEER.
2. ALL SIGNS, DRUMS, CONCRETE BARRIERS, AND ANY OTHER DEVICES USED IN CONSTRUCTION ZONES SHALL BE KEPT CLEAN AND PROPERLY ALIGNED AT ALL TIMES.
3. ALL SIGNS THAT GOVERN TRAFFIC FLOW THROUGH A CONSTRUCTION ZONE SHALL BE COVERED OR REMOVED AND STORED AWAY FROM TRAFFIC WHEN NOT IN USE.
4. CONTRACTOR SHALL TEMPORARILY COVER ANY EXISTING SIGNS WHOSE MESSAGE CONTRADICTS TEMPORARY CONSTRUCTION SIGNS DURING CONSTRUCTION & UNCOVER THEM AT THE COMPLETION OF THE PROJECT, AS DIRECTED BY THE ENGINEER.
5. ALL SIGNS SHALL BE FIELD LOCATED AS DIRECTED BY THE ENGINEER.
6. CONCRETE BARRIER SHALL BE USED FOR THE DURATION OF THE PROJECT.
7. CONTRACTOR SHALL LIFT CONCRETE TRAFFIC BARRIERS TO PLACE INTO POSITION. SLIDING CONCRETE TRAFFIC BARRIERS SHALL NOT BE PERMITTED.
8. BARRIERS SHALL BE MOVED AS NECESSARY, DURING DAYLIGHT HOURS ONLY, FOR PAVING APPROACHES, ETC.
9. ALL SIGNAGE SHALL BE DIAMOND GRADE (FLUORESCENT PRISMATIC LENS SHEETING).
10. ALL TEMPORARY CONSTRUCTION PAVEMENT MARKINGS SHALL BE FURNISHED AND INSTALLED BY THE CONTRACTOR.
11. ALL FINAL PAVEMENT MARKINGS SHALL BE COMPLETED BY THE CITY OF LYNCHBURG.
12. THE CONTRACTOR SHALL GIVE THE CITY OF LYNCHBURG A MINIMUM OF TEN (10) DAYS NOTICE PRIOR TO ANY TRAFFIC ALIGNMENT CHANGES.
13. THE CONTRACTOR SHALL PROVIDE & MAINTAIN THREE (3) MESSAGE BOARDS TO NOTIFY THE TRAVELING PUBLIC OF UPCOMING CHANGES IN TRAFFIC FLOW PATTERNS.

    CONSTRUCTION: CONTRACTOR SHALL FURNISH AND MAINTAIN 3 MESSAGE BOARDS FOR 1 WEEK PRIOR TO CONSTRUCTION AND 1 WEEK AFTER CONSTRUCTION STARTS.
14. THE CITY OF LYNCHBURG WILL DETERMINE THE LOCATION AND MESSAGE, TO BE DISPLAYED, FOR EACH MESSAGE BOARD PRIOR TO CONSTRUCTION.

NOTE: FOR ADDITIONAL SIGNAGE AND TRAFFIC CONTROL REQUIREMENTS, SEE SHEET 21.

1 REV. 2/23/04

CRANEHILL DRIVE OVER IVY CREEK TRAFFIC CONTROL SIGNS

COMMONWEALTH OF VIRGINIA
R. W. SCHWARTZ
No. 4291
1-20-04
PROFESSIONAL ENGINEER

SCHWARTZ & ASSOCIATES, INC.
CONSULTING ENGINEERS

7331 TIMBERLAKE ROAD
LYNCHBURG, VA.

THE CITY OF LYNCHBURG, VIRGINIA
DEPT. OF PUBLIC WORKS
ENGINEERING

DESIGNED BY: RES	DRAWN BY: RES	CHECKED BY: RWS
SCALE: AS SHOWN	PROJECT NO.: 02021-B	
DATE: JANUARY 20, 2004	SHEET 20 OF 30	

COMM. NO. 03026

CADD REFERENCE NO. REV. TRAFFIC CONTROL

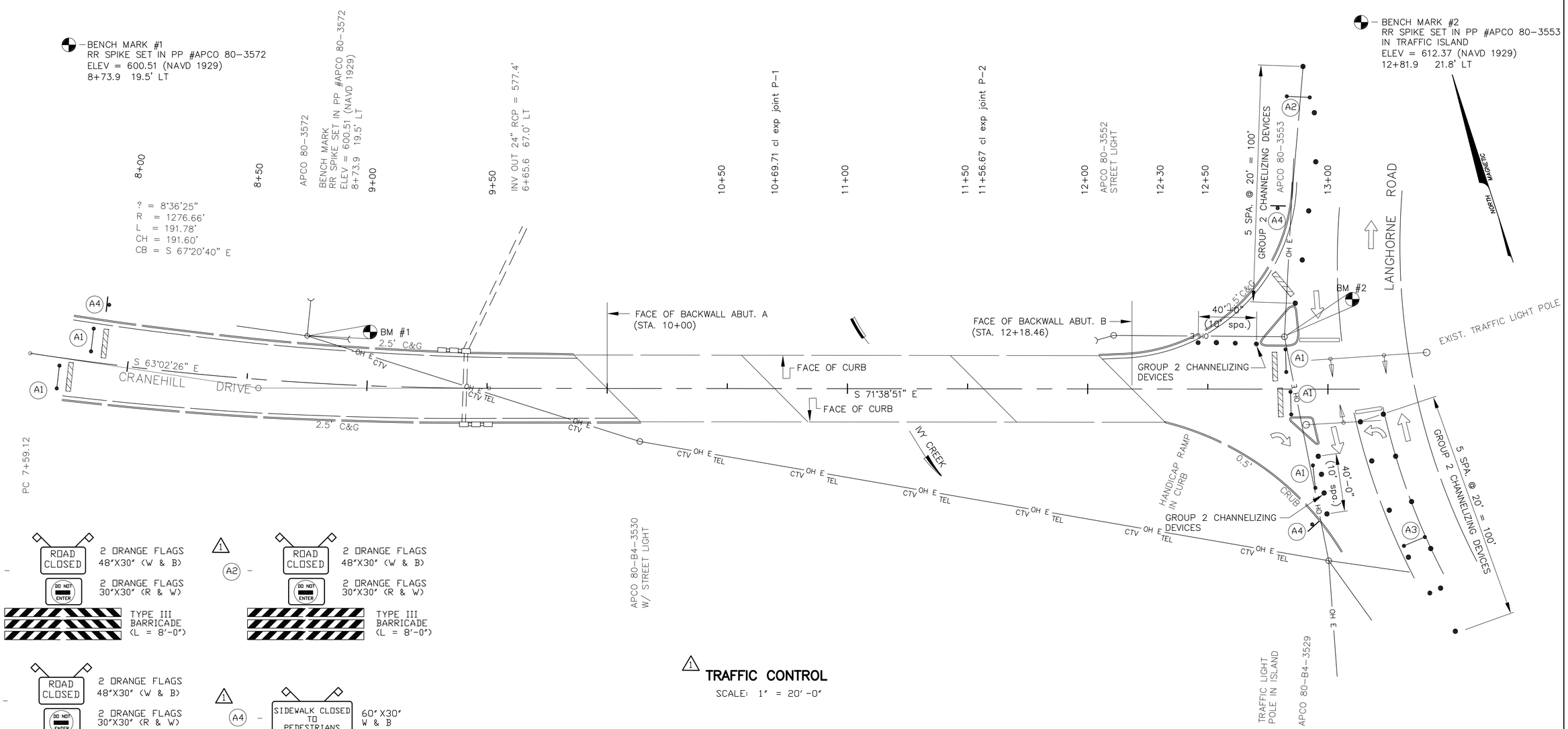

1 **TRAFFIC CONTROL**

SCALE: 1" = 20'-0"

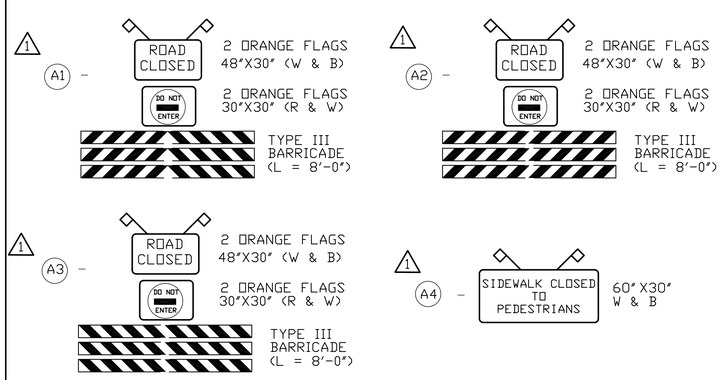

W & B = WHITE & BLACK
R & W = RED & WHITE

● – DENOTES GROUP 2 CHANNELIZING DEVICES

– DENOTES SIGNS

– DENOTES CONCRETE TRAFFIC BARRIER (12')

– DENOTES TYPE III BARRICADE (8') & SIGN

NOTE:

ALL SIGN SIZES SHALL BE IN ACCORDANCE WITH CURRENT EDITION OF THE VA. WORK AREA PROTECTION MANUAL & M.U.T.C.D MANUAL.

FOR ADDITIONAL SIGNAGE AND NOTES, SEE SHEET 20.

1 REV. 2/23/04

CADD REFERENCE NO. 03026

CRANEHILL DRIVE OVER IVY CREEK
TRAFFIC CONTROL

COMMONWEALTH OF VIRGINIA
R. W. SCHWARTZ
No. 4291
1-20-04
PROFESSIONAL ENGINEER

COMM. NO. 03026

SCHWARTZ & ASSOCIATES, INC.
CONSULTING ENGINEERS

7331 TIMBERLAKE ROAD
LYNCHBURG, VA.

THE CITY OF LYNCHBURG, VIRGINIA
DEPT. OF PUBLIC WORKS
ENGINEERING

DESIGNED BY: RES	DRAWN BY: RES	CHECKED BY: RWS
SCALE: AS SHOWN	PROJECT NO.: 02021-B	
DATE: JANUARY 20, 2004	SHEET 21 OF 30	

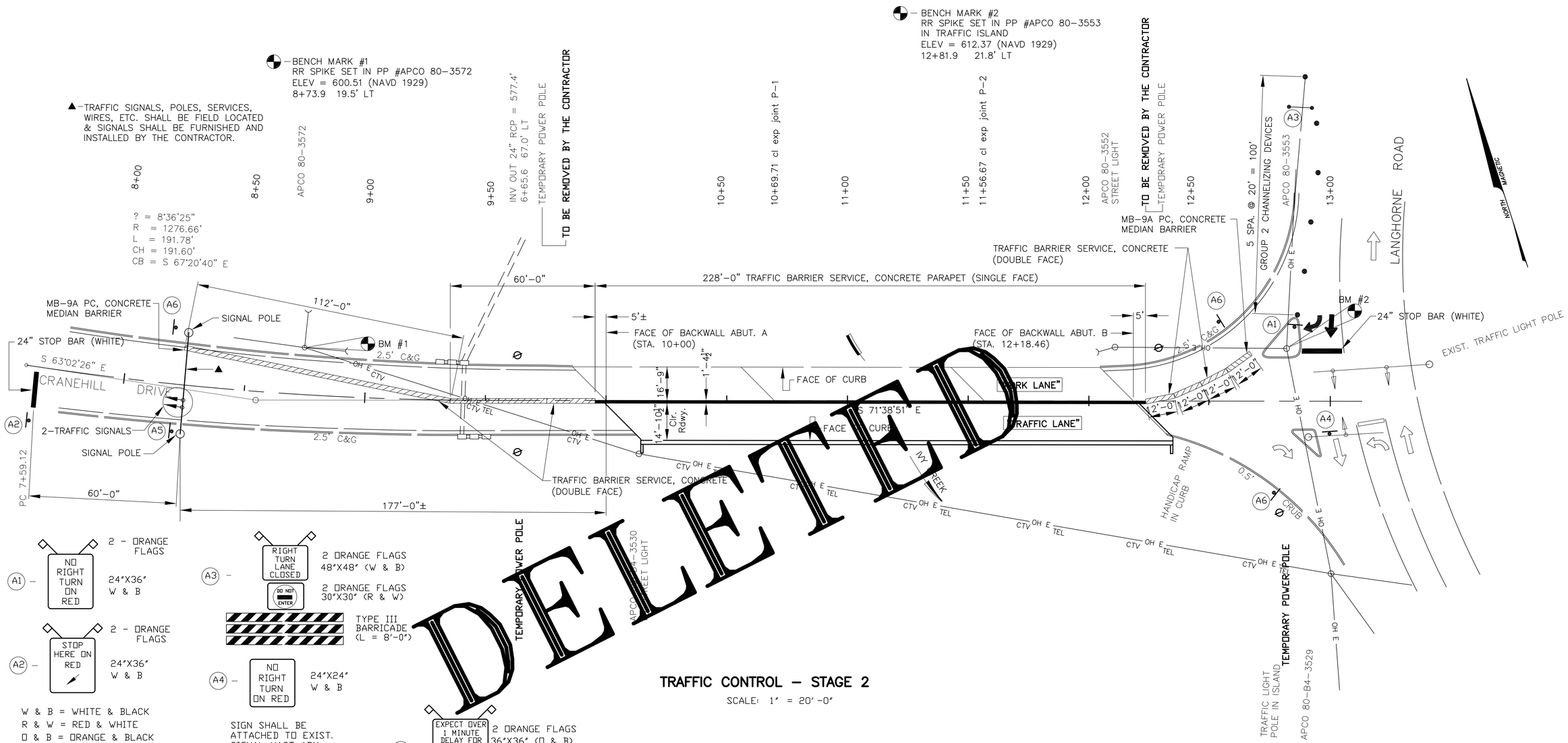

A1 – NO RIGHT TURN ON RED — 2 - ORANGE FLAGS; 24"X36" W & B

A2 – STOP HERE ON RED — 2 - ORANGE FLAGS; 24"X36" W & B

W & B = WHITE & BLACK
R & W = RED & WHITE
O & B = ORANGE & BLACK

● – DENOTES GROUP 2 CHANNELIZING DEVICES

– DENOTES SIGNS

– DENOTES TYPE III BARRICADE (8') & SIGN

A3 – RIGHT TURN LANE CLOSED — 2 ORANGE FLAGS 48"X48" (W & B)
DO NOT ENTER — 2 ORANGE FLAGS 30"X30" (R & W)
TYPE III BARRICADE (L = 8'-0")

A4 – NO RIGHT TURN ON RED — 24"X24" W & B

SIGN SHALL BE ATTACHED TO EXIST. SIGNAL MAST ARM, AS DIRECTED BY THE ENGINEER.

A5 – EXPECT OVER 1 MINUTE DELAY FOR GREEN — 2 ORANGE FLAGS 36"X36" (O & B)
DO NOT PROCEED UNTIL GREEN INDICATOR — 36"X48" (O & B)

A6 – SIDEWALK CLOSED TO PEDESTRIANS — 60"X30" W & B

TRAFFIC CONTROL – STAGE 2

SCALE: 1" = 20'-0"

NOTE:

A 14'-10 1/2" MIN. CLEAR ROADWAY SHALL BE MAINTAINED AT ALL TIMES THROUGHOUT PROJECT.

ALL SIGN SIZES SHALL BE IN ACCORDANCE WITH CURRENT EDITION OF THE VA. WORK AREA PROTECTION MANUAL & M.U.T.C.D MANUAL.

FOR ADDITIONAL SIGNAGE AND NOTES, SEE SHEETS 20 & 21.

NOTE: CONTRACTOR SHALL FURNISH, INSTALL & GUY OFF 2 TEMPORARY POWER POLES (UPSTREAM SIDE OF BRIDGE) IN ORDER FOR THE CITY OF LYNCHBURG TO FURNISH & INSTALL A OVERHEAD LINE ON TO THE POLES AND TIE THE, CONTRACTOR FURNISHED, TEMPORARY SIGNALS, TO THE SIGNALS AT THE INTERSECTION OF CRANEHILL DRIVE AND LANGHORNE ROAD. THE CITY WILL FIELD LOCATE TEMPORARY POWER POLE LOCATIONS PRIOR TO CONSTRUCTION.

TEMPORARY POWER POLES SHALL BE SUFFICIENT LENGTH TO ACCOMMODATE POWER LINES WITH A 16'-0" MIN. VERTICAL CLEARANCE OVER ROADWAY.

AT THE COMPLETION OF THE PROJECT OR AS DIRECTED BY THE ENGINEER, THE CONTRACTOR SHALL REMOVE ALL TEMPORARY POWER POLES, BACKFILL AND RESTORE AREA TO ITS ORIGINAL CONDITION AND RETAIN OWNERSHIP OF THE POLES.

1 REV. 2/23/04

THIS SHEET DELETED – FEBRUARY 23, 2004

CRANEHILL DRIVE OVER IVY CREEK
TRAFFIC CONTROL – STAGE 2

COMMONWEALTH OF VIRGINIA
R. W. SCHWARTZ
No. 4291
1-20-04
PROFESSIONAL ENGINEER

SCHWARTZ & ASSOCIATES, INC.
CONSULTING ENGINEERS
7331 TIMBERLAKE ROAD
LYNCHBURG, VA.

THE CITY OF LYNCHBURG, VIRGINIA
DEPT. OF PUBLIC WORKS
ENGINEERING

DESIGNED BY: RES	DRAWN BY: RES	CHECKED BY: RWS
SCALE: AS SHOWN	PROJECT NO.: 02021-B	
COMM. NO. 03026	DATE: JANUARY 20, 2004	SHEET 22 OF 30

CADD REFERENCE NO. 03026

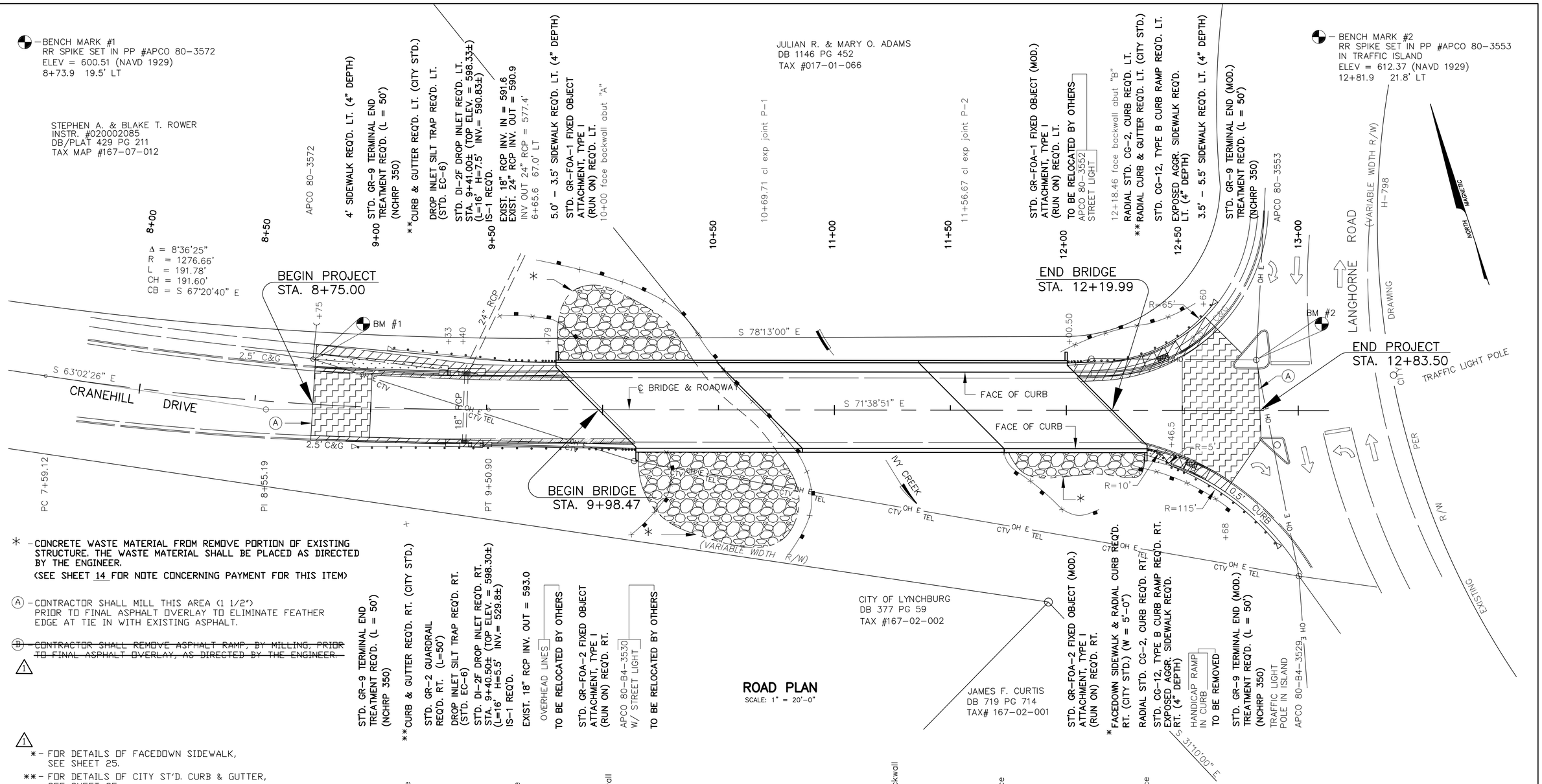

* - CONCRETE WASTE MATERIAL FROM REMOVE PORTION OF EXISTING STRUCTURE. THE WASTE MATERIAL SHALL BE PLACED AS DIRECTED BY THE ENGINEER.
(SEE SHEET 14 FOR NOTE CONCERNING PAYMENT FOR THIS ITEM)

(A) - CONTRACTOR SHALL MILL THIS AREA (1 1/2") PRIOR TO FINAL ASPHALT OVERLAY TO ELIMINATE FEATHER EDGE AT TIE IN WITH EXISTING ASPHALT.

~~(B) - CONTRACTOR SHALL REMOVE ASPHALT RAMP, BY MILLING, PRIOR TO FINAL ASPHALT OVERLAY, AS DIRECTED BY THE ENGINEER.~~

1

1
* - FOR DETAILS OF FACEDOWN SIDEWALK, SEE SHEET 25.
** - FOR DETAILS OF CITY ST'D. CURB & GUTTER, SEE SHEET 25.

- *DENOTES LIMITS OF FLEXIBLE PAVEMENT PLANING*
- *DENOTES LIMITS OF CONCRETE WASTE MATERIAL FROM REMOVE PORTION OF EXISTING STRUCTURE*
- *DENOTES GRASS AREA*
- *HATCHED AREA DENOTES DEMOLITION OF PAVEMENT*
- *STIPPLED AREA DENOTES PAVEMENT WIDENING*
- *DENOTES SILT FENCE, ST'D. EC-5*

ROAD PLAN
SCALE: 1" = 20'-0"

REFERENCE DETAIL
NOT TO SCALE

1 REV. 2/23/04

CRANEHILL DRIVE OVER IVY CREEK
ROAD PLAN

COMMONWEALTH OF VIRGINIA
R. W. SCHWARTZ
No. 4291
1-20-04
PROFESSIONAL ENGINEER

SCHWARTZ & ASSOCIATES, INC.
CONSULTING ENGINEERS
7331 TIMBERLAKE ROAD
LYNCHBURG, VA.

THE CITY OF LYNCHBURG, VIRGINIA
DEPT. OF PUBLIC WORKS
ENGINEERING

DESIGNED BY: RES	DRAWN BY: RES	CHECKED BY: DLP
SCALE: AS SHOWN	PROJECT NO.: 02021-B	
COMM. NO. 03026	DATE: JANUARY 20, 2004	SHEET 23 OF 30

CADD REFERENCE NO. 03026

PAVEMENT SUMMARY △1

	▲ ASPHALT CONCRETE TYPE SM-9.5D	ASPHALT CONC. BASE COURSE TYPE BM-37.5	AGGR. BASE MATERIAL TYPE I, SIZE #21-B (6% MOIST. CORRECTION)	CRUSHER RUN AGGR. NO. 25 OR NO. 26	FLEXIBLE PAVEMENT PLANING (1½" DEPTH)
	TON	TON	TON	TON	S.Y.
TOTALS	100	105	60	50	530

▲ - NON-POLISHING AGGREGATE

DRAINAGE SUMMARY

	DROP INLET ST'D. DI-2F H=7.5' L=16'	DROP INLET ST'D. DI-2F H=5.5' L=16'	DROP INLET SILT TRAP (ST'D. EC-6)	TEMPORARY SILT FENCE (ST'D. EC-5)	SILTATION CONTROL EXCAVATION
	EA.	EA.	EA.	L.F.	C.Y.
TOTALS	1	1	2	455	60

INCIDENTAL SUMMARY △1

	CONSTRUCTION SURVEYING	MAINTENANCE OF TRAFFIC	ALLAYING DUST	⊕ DEMOLITION OF PAVEMENT	HYDRAULIC CEMENT CONCRETE SIDEWALK (4" DEPTH)	FACEDOWN SIDEWALK (CITY ST'D.) (4" DEPTH)	RADIAL FACEDOWN CURB (CITY ST'D.)	EXPOSED AGGREGATE SIDEWALK (4" DEPTH)	CURB & GUTTER (CITY ST'D.)	RADIAL CURB & GUTTER (CITY ST'D.)	RADIAL STD. CG-2 CURB	⊕ TRAFFIC BARRIER SERVICE, CONCRETE
	LUMP SUM	LUMP SUM	HOURS	S.Y.	S.Y.	S.Y.	L.F.	S.Y.	L.F.	L.F.	L.F.	L.F.
TOTALS	L.S.	LUMP SUM	100	183	80	12	40	3	214	65	32	424

INCIDENTAL SUMMARY (CONT.)

	✳✳ SEEDING	GUARDRAIL ST'D. GR-2	GUARDRAIL TERMINAL ST'D. GR-9 (NCHRP-350)	GUARDRAIL TERMINAL ST'D. GR-9 (MOD.) (NCHRP-350)	FIXED OBJECT ATTACHMENT GR-FOA-2 TYPE I (RUN ON)	FIXED OBJECT ATTACHMENT GR-FOA-2 TYPE I (RUN ON) (MOD.)	FIXED OBJECT ATTACHMENT GR-FOA-1 TYPE I (RUN ON)	FIXED OBJECT ATTACHMENT GR-FOA-1 TYPE I (RUN ON) (MOD.)	△1 FURNISH PORTABLE CHANGEABLE MESSAGE SIGN	△1 PORTABLE CHANGEABLE MESSAGE SIGN
	LUMP SUM	L.F.	EACH	EACH	EACH	EACH	EACH	EACH	EACH	HOUR
TOTALS	L.S.	50	2	2	1	1	1	1	3	1,008

⊕ - DENOTES ITEMS TO BE PAID FOR ON A PLAN QUANTITY BASIS, ACCORDING TO THE CURRENT ROAD & BRIDGE SPECIFICATIONS.

✳✳ - APPROXIMATELY 0.3 ACRES (FOR ESTIMATING PURPOSES ONLY)

NOTE: WHERE DEMOLITION OF PAVEMENT IS SHOWN, THERE WILL BE NO ADDITIONAL COMPENSATION FOR TRENCH OUT.

DISPOSAL OF SURPLUS MATERIAL IS A NON-PAY ITEM.

ANY DENUDING NECESSARY IS A NON-PAY ITEM.

FILL IS NOT A PAY ITEM.

SEE SHEET 3 FOR ADDITIONAL BRIDGE SUMMARY.

△1 REV. 2/23/04

CADD REFERENCE NO. 03026SUM

CRANEHILL DRIVE OVER IVY CREEK
SUMMARY

COMMONWEALTH OF VIRGINIA
R. W. SCHWARTZ
No. 4291
1-20-04
PROFESSIONAL ENGINEER

COMM. NO. 03026

SCHWARTZ & ASSOCIATES, INC.
CONSULTING ENGINEERS

7331 TIMBERLAKE ROAD
LYNCHBURG, VA.

THE CITY OF LYNCHBURG, VIRGINIA
DEPT. OF PUBLIC WORKS
ENGINEERING

DESIGNED BY: RES	DRAWN BY: RES	CHECKED BY: DLP
SCALE: NOT TO SCALE		PROJECT NO.: 02021-B
DATE: JANUARY 20, 2004		SHEET 26 OF 30