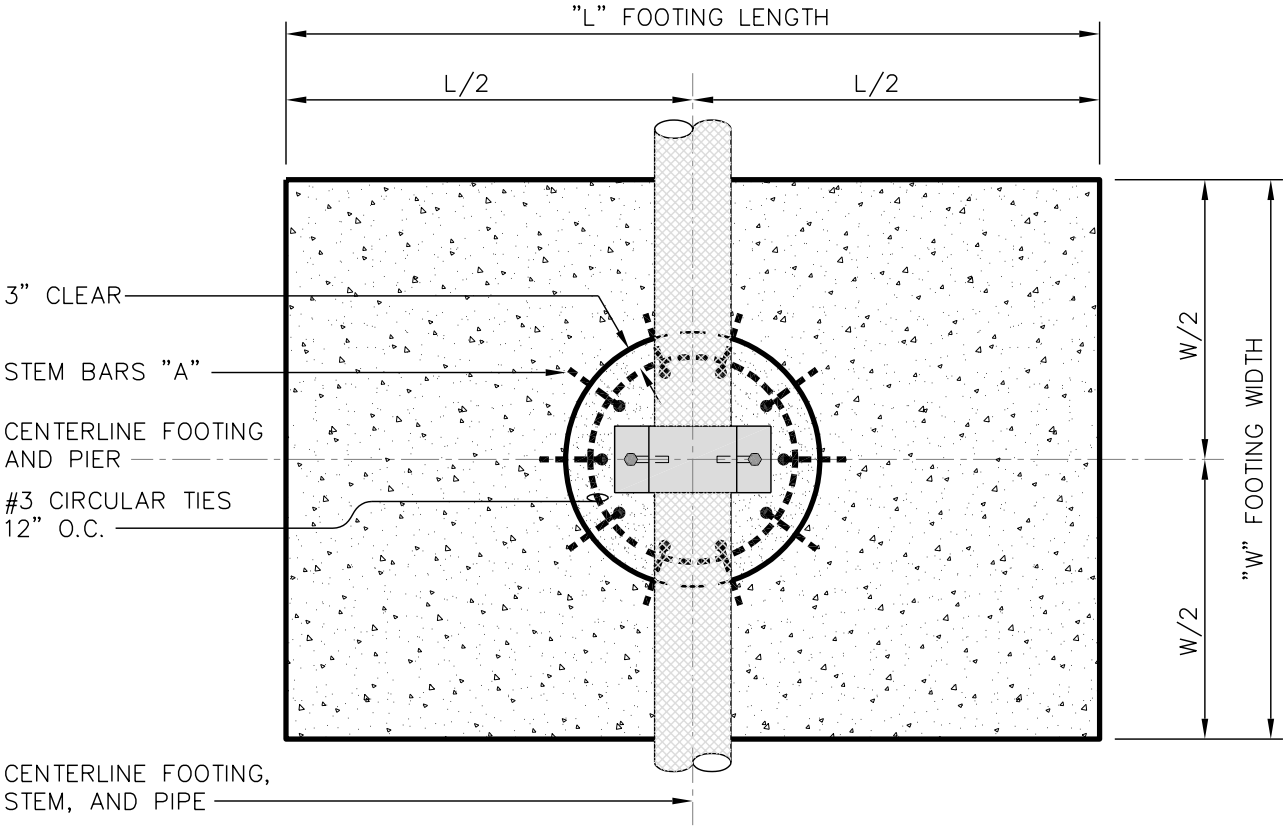

PLAN

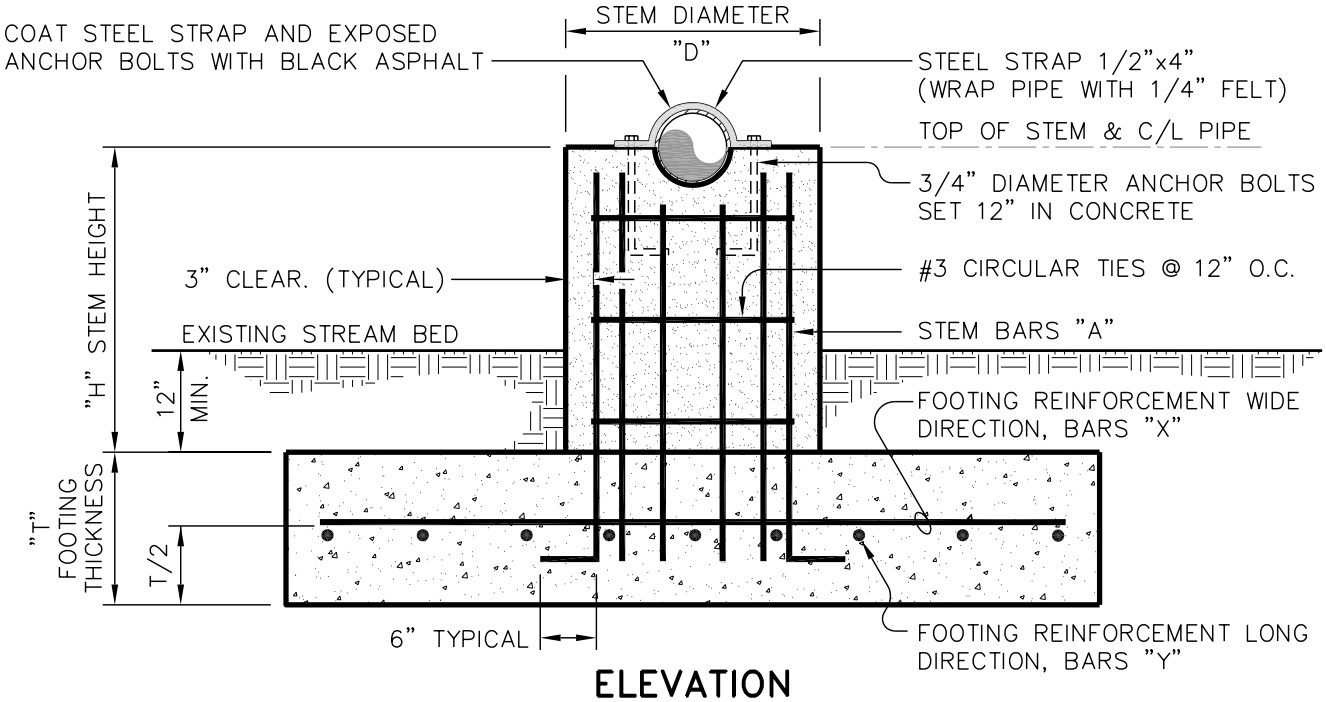

ELEVATION

NOTES:

1. AN ALTERNATE DESIGN MAY BE SUBMITTED FOR REVIEW BY THE CITY ENGINEER.

THE CITY OF LYNCHBURG

PIPE SUPPORT PIER for WATER CROSSING	SCALE: NOT TO SCALE	DETAIL # 27.18
USE WITH THE CITY OF LYNCHBURG STANDARD SPECIFICATIONS ONLY	REVISION DATE: 04-10-03	SHEET #: 1 OF 2