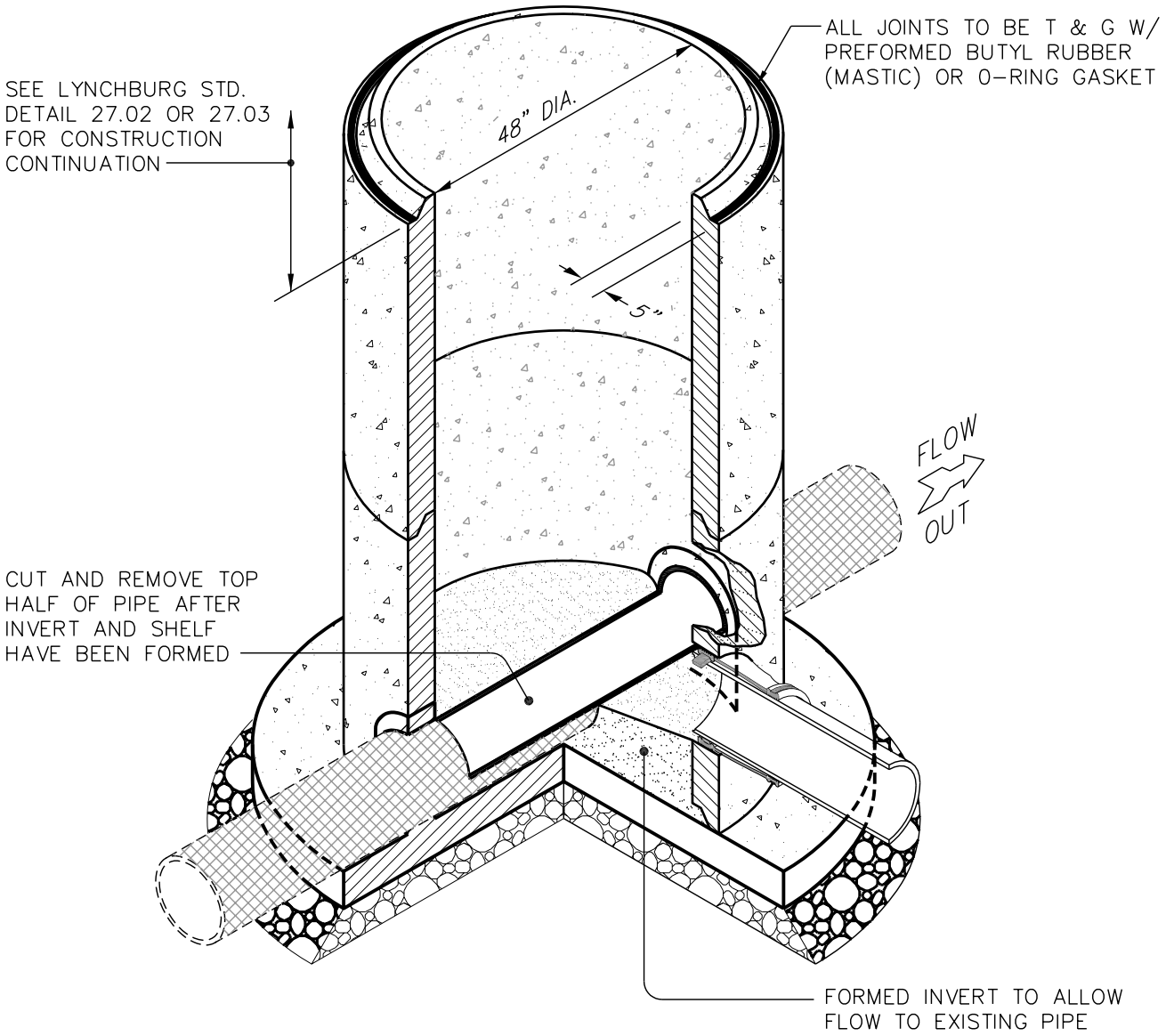

INVERT SECTION VIEW

NOTES:

1. ALL SERVICE LATERALS INTO MANHOLE TO BE CORE DRILLED AND BOOTED.
2. MAXIMUM DEPTH 4' DIA. MANHOLE = 20' (SEE SPECIFICATIONS).

THE CITY OF LYNCHBURG

PRECAST CONCRETE
DOGHOUSE MANHOLE

USE WITH THE CITY OF LYNCHBURG STANDARD SPECIFICATIONS ONLY

SCALE:	DETAIL #
NOT TO SCALE	27.07
REVISION DATE:	SHEET #:
04-10-03	2 OF 2