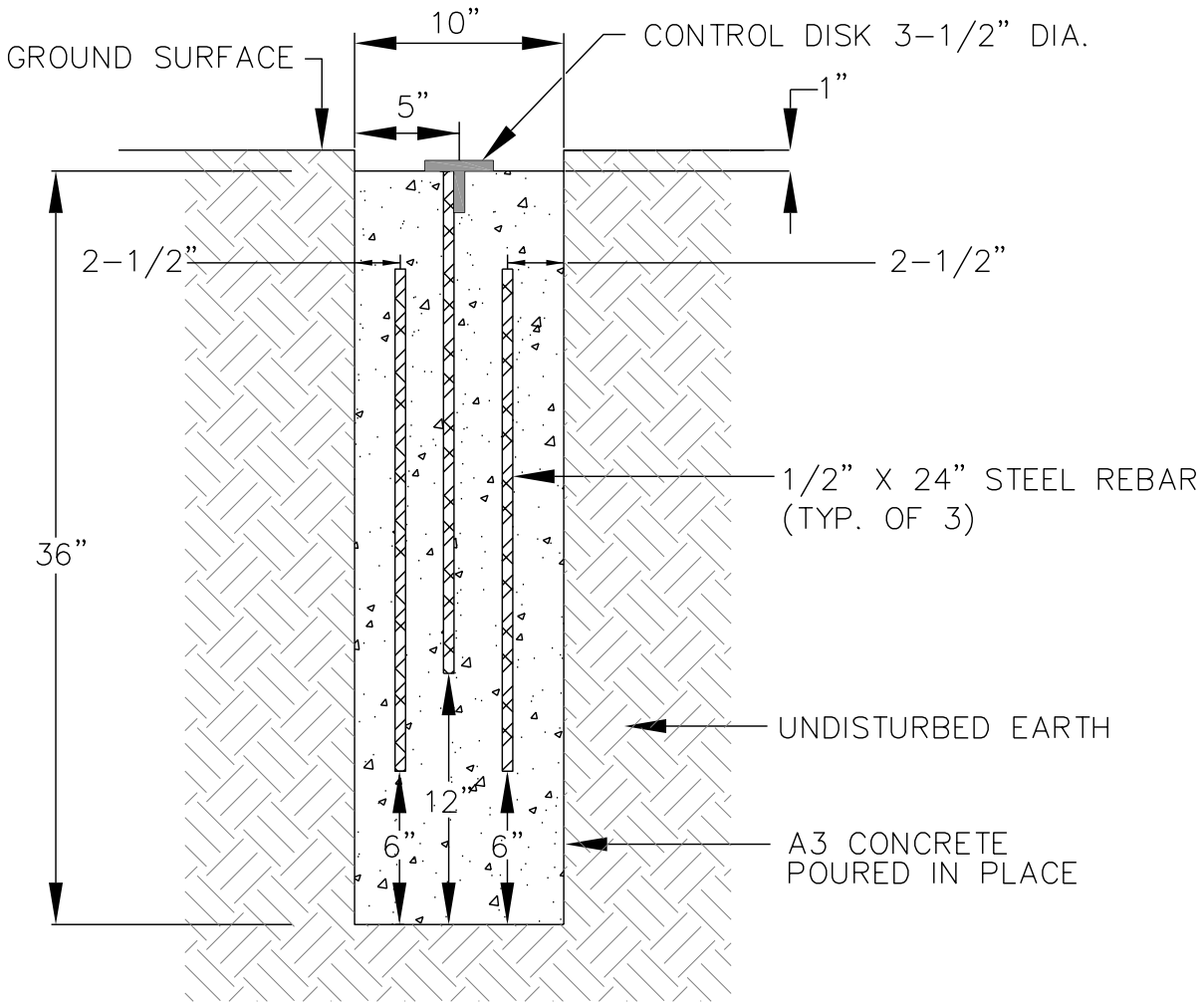

NOTES:

1. IF THE MONUMENT IS TO BE SET IN A PAVED OR CONCRETE AREA, THE AREA SHALL BE CORE DRILLED AND THE CONTROL DISK SET IN CONCRETE WITH THE TOP OF THE DISK SET FLUSH WITH THE EXISTING SURFACE.
2. A MINIMUM OF TWO (2) CONTROL DISKS SHALL BE SET WITHIN SIGHT OF EACH OTHER WITH THE LONGEST POSSIBLE SIGHT DISTANCE, OR AS SPECIFIED BY THE CITY.
3. THE STANDARD CONTROL DISK WILL BE PROVIDED BY THE CITY AND INSTALLED BY CONTRACTOR.
4. HORIZONTAL CONTROL SHALL BE BASED ON NORTH AMERICAN DATUM 1983 (NAD 83), VIRGINIA STATE PLANE COORDINATE SYSTEM SOUTH ZONE, AND VERTICAL DATUM SHALL BE BASED ON NATIONAL GEODETIC VERTICAL DATUM 1929 (NGVD 29). HORIZONTAL CONTROL COORDINATE VALUES SHALL BE EXPRESSED TO THE NEAREST THOUSANDTH OF A FOOT (0.001') AND VERTICAL CONTROL SHALL BE EXPRESSED TO THE NEAREST HUNDREDTH OF A FOOT (0.01'). ALL CONTROLS SHALL BE BASED ON THE U.S. SURVEY FOOT. A VIRGINIA STATE LICENSED SURVEYOR MUST CERTIFY THE COORDINATE VALUES OF THE CONTROL DISKS BEFORE THEY WILL BE ACCEPTED BY THE CITY.

THE CITY OF LYNCHBURG

HORIZONTAL CONTROL MONUMENT	SCALE: NOT TO SCALE	DETAIL # 25.23
	REVISION DATE: 08-20-03	SHEET #: 1 OF 1

USE WITH THE CITY OF LYNCHBURG STANDARD SPECIFICATIONS ONLY