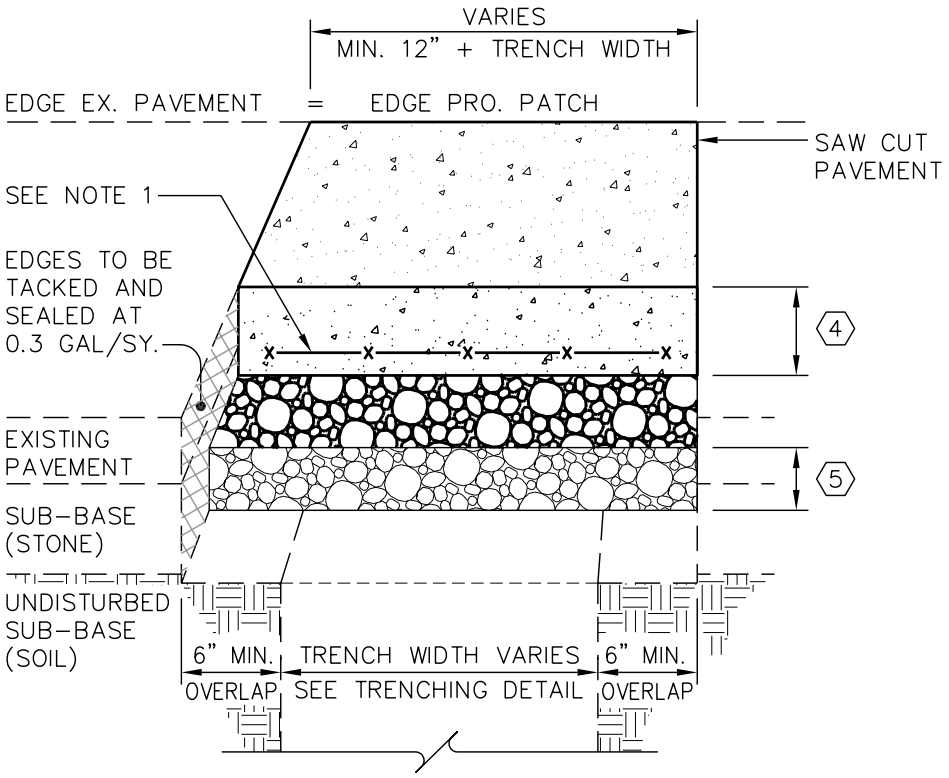

PATCH DESIGN FOR CONCRETE STREETS

TYPE STREET	ARTERIAL and INDUSTRIAL	COLLECTOR	RESIDENTIAL
TYPE PATCH	TYPE D	TYPE E	TYPE F
4	10" 3,000 PSI CONC.	8" 3,000 PSI CONC.	6" 3,000 PSI CONC.
5	4" VDOT NO.21A	4" VDOT NO.21A	4" VDOT NO.21A
PATCH DEPTH	14"	12"	10"

NOTES:

1. WHEN PIPE O.D. PLUS 2' OR EXCAVATED TRENCH WIDTH EXCEEDS 4 FEET, THEN WWF 6x6 W1.4 x W1.4 GAUGE IS REQUIRED SUSPENDED IN THE CONCRETE A MINIMUM OF 2 INCHES FROM BOTTOM OF CONCRETE PATCH. (NO. 4 REINFORCING BARS 12x12 IS AN ACCEPTABLE ALTERNATIVE FOR WWF.) THIS NOTE ONLY APPLIES TO PATCH D,E, & F.
2. PAVEMENT SHALL BE AS SHOWN UNLESS OTHERWISE SPECIFIED.

THE CITY OF LYNCHBURG

TRENCH PATCH
CONCRETE STREETS – TYPE D,E,& F

USE WITH THE CITY OF LYNCHBURG STANDARD SPECIFICATIONS ONLY

SCALE:	DETAIL #
NOT TO SCALE	25.19
REVISION DATE: 04-10-03	SHEET #: 1 OF 1