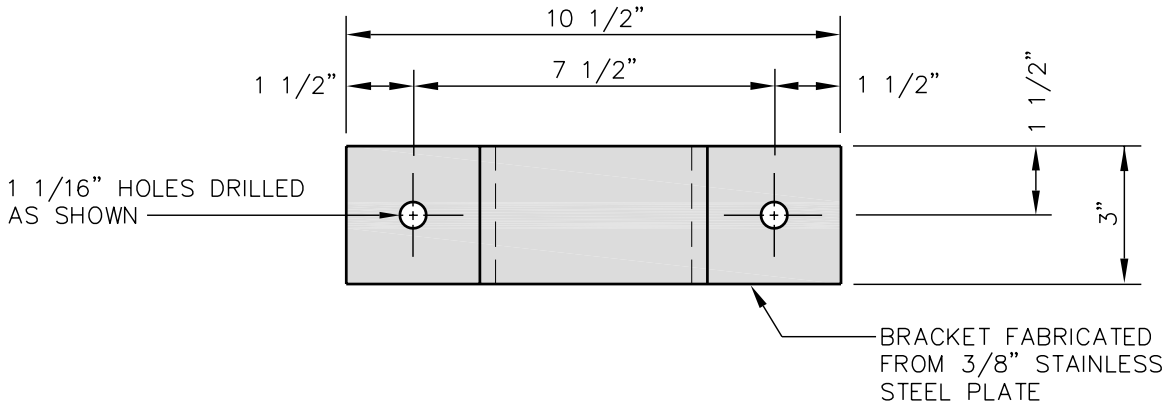

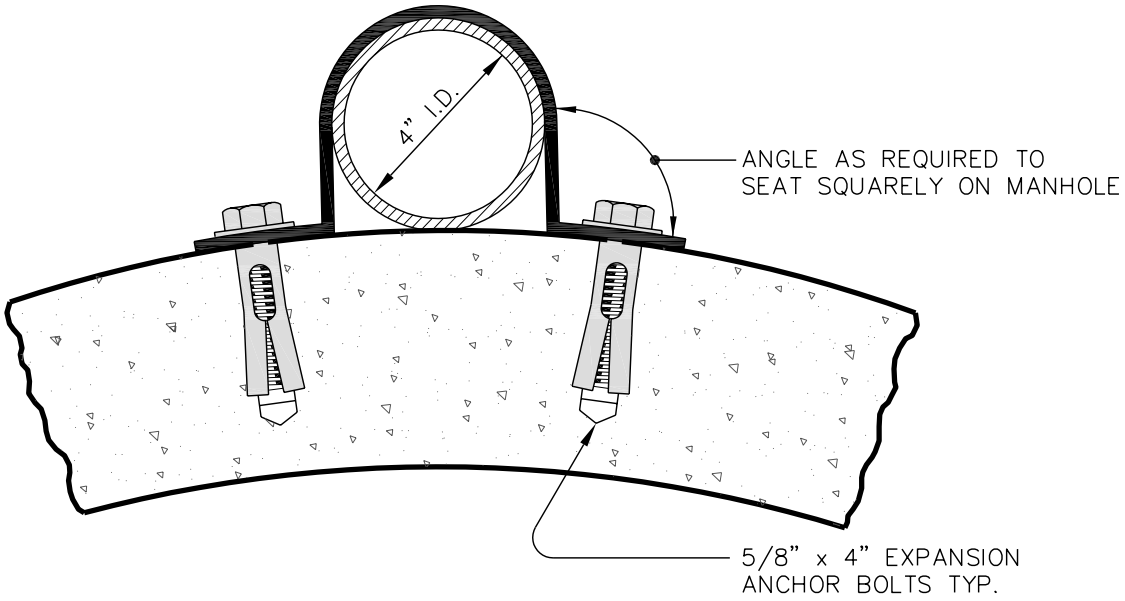

THE CITY OF LYNCHBURG

STANDARD MANHOLE VENTING PIPE DETAIL

USE WITH THE CITY OF LYNCHBURG STANDARD SPECIFICATIONS ONLY

SCALE:	DETAIL #
NOT TO SCALE	27.06
REVISION DATE:	SHEET #:
10-21-04	2 OF 2