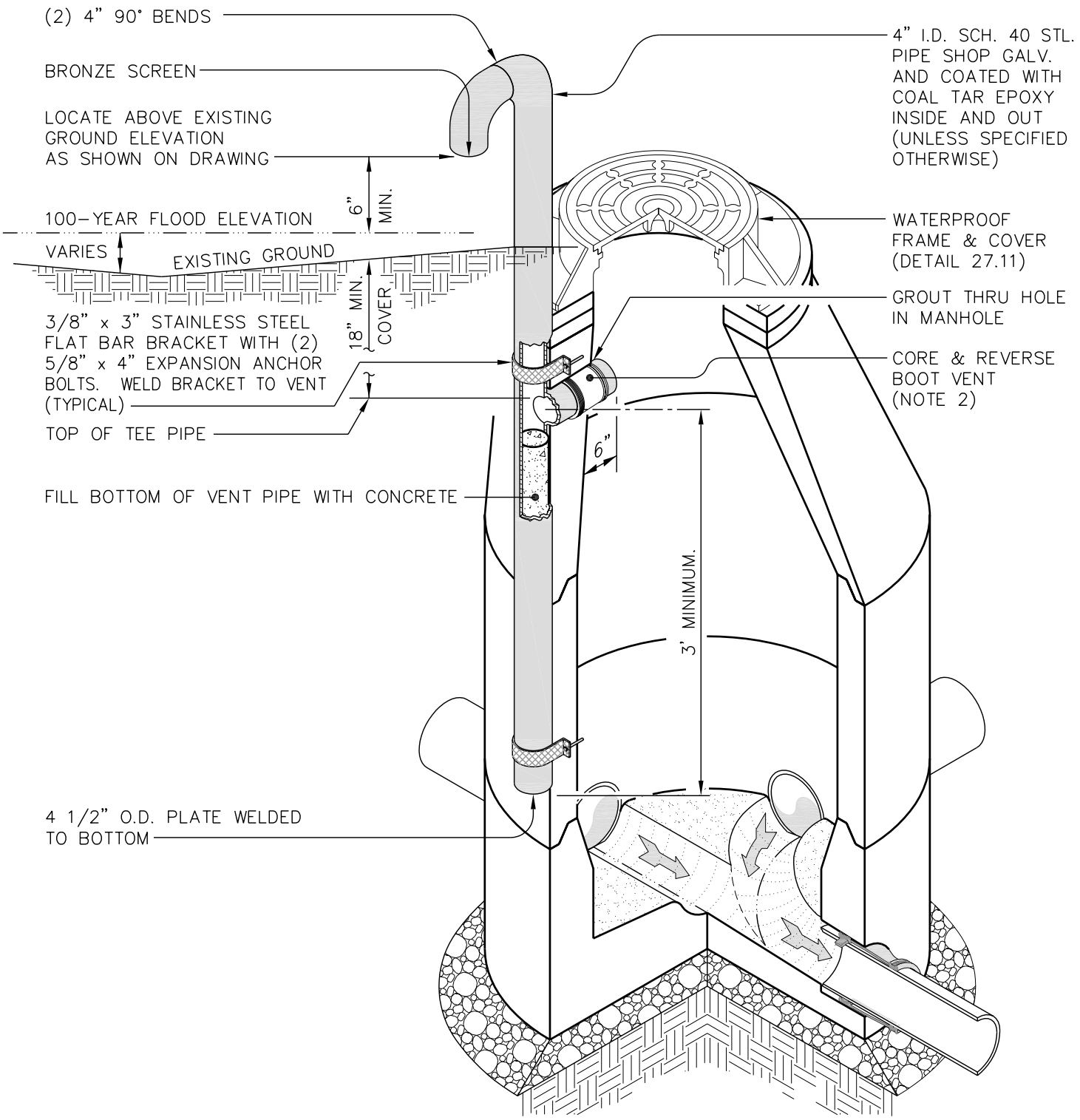

NOTES:

1. LOCATE VENT PIPE AS SHOWN OR AS DIRECTED BY CITY ENGINEER.
2. CONNECT 4" STEEL VENT PIPE TO MANHOLE WITH FLEXIBLE BOOT.

THE CITY OF LYNCHBURG

STANDARD MANHOLE VENTING PIPE DETAIL	SCALE: NOT TO SCALE	DETAIL # 27.06
USE WITH THE CITY OF LYNCHBURG STANDARD SPECIFICATIONS ONLY	REVISION DATE: 10-21-04	SHEET #: 1 OF 2