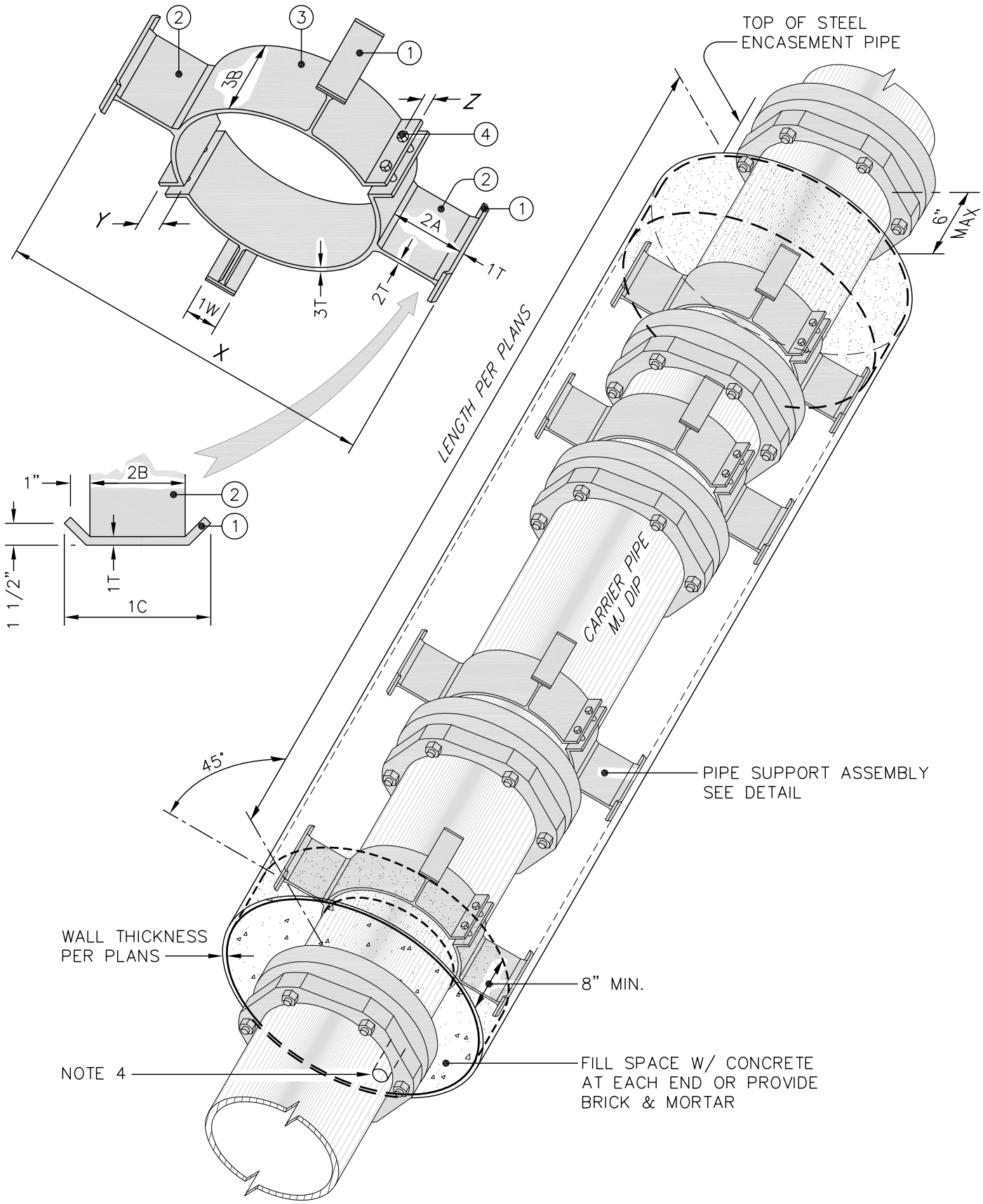

THE CITY OF LYNCHBURG

STEEL ENCASEMENT DETAIL

USE WITH THE CITY OF LYNCHBURG STANDARD SPECIFICATIONS ONLY

SCALE:	DETAIL #
NOT TO SCALE	26.24
REVISION DATE:	SHEET #:
10-21-04	1 OF 2