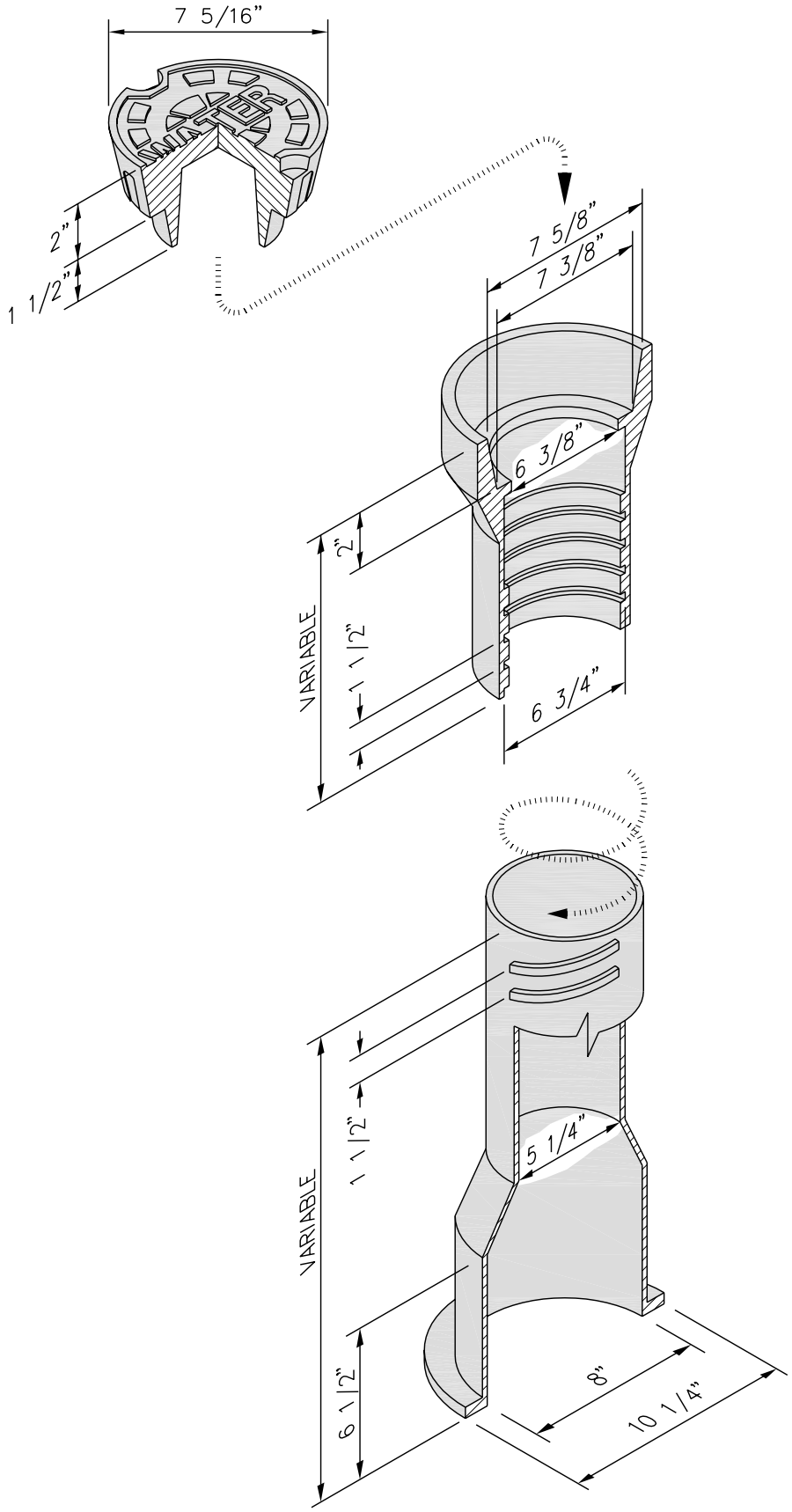

THE CITY OF LYNCHBURG

2 – PIECE ADJUSTABLE SCREW VALVE BOX DETAIL

USE WITH THE CITY OF LYNCHBURG STANDARD SPECIFICATIONS ONLY

SCALE:	DETAIL #
NOT TO SCALE	26.16
REVISION DATE:	SHEET #:
10-21-04	1 OF 1