ISOMETRIC VIEW

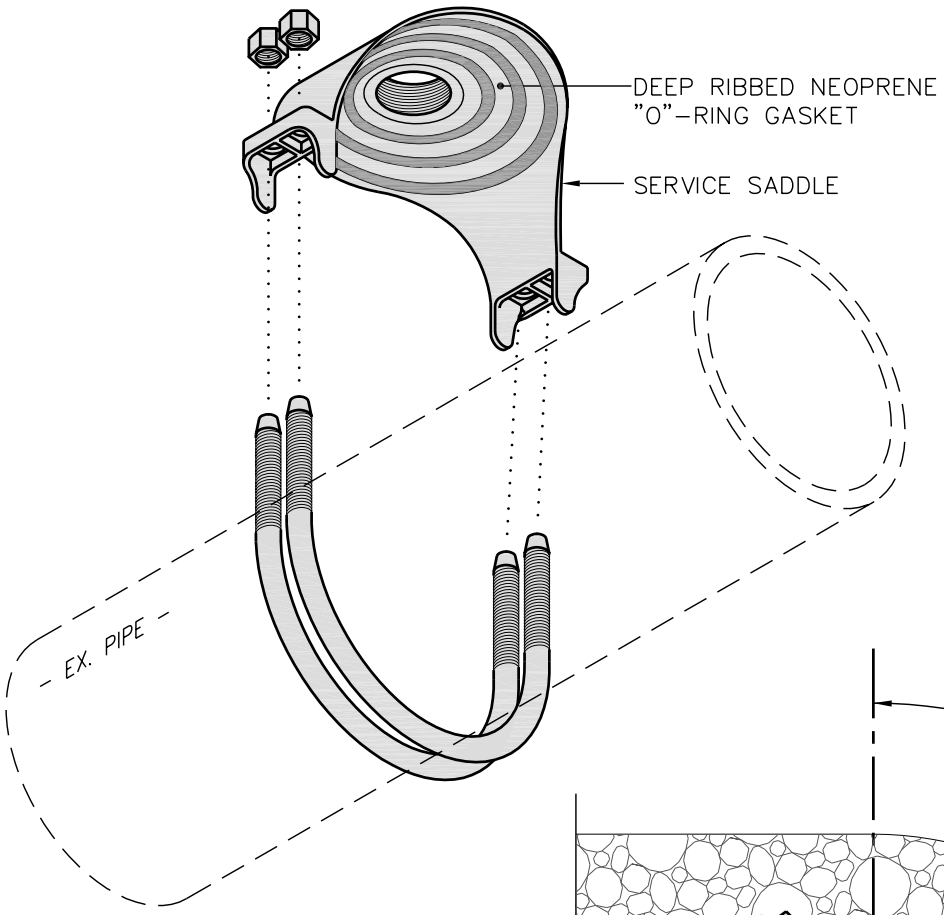

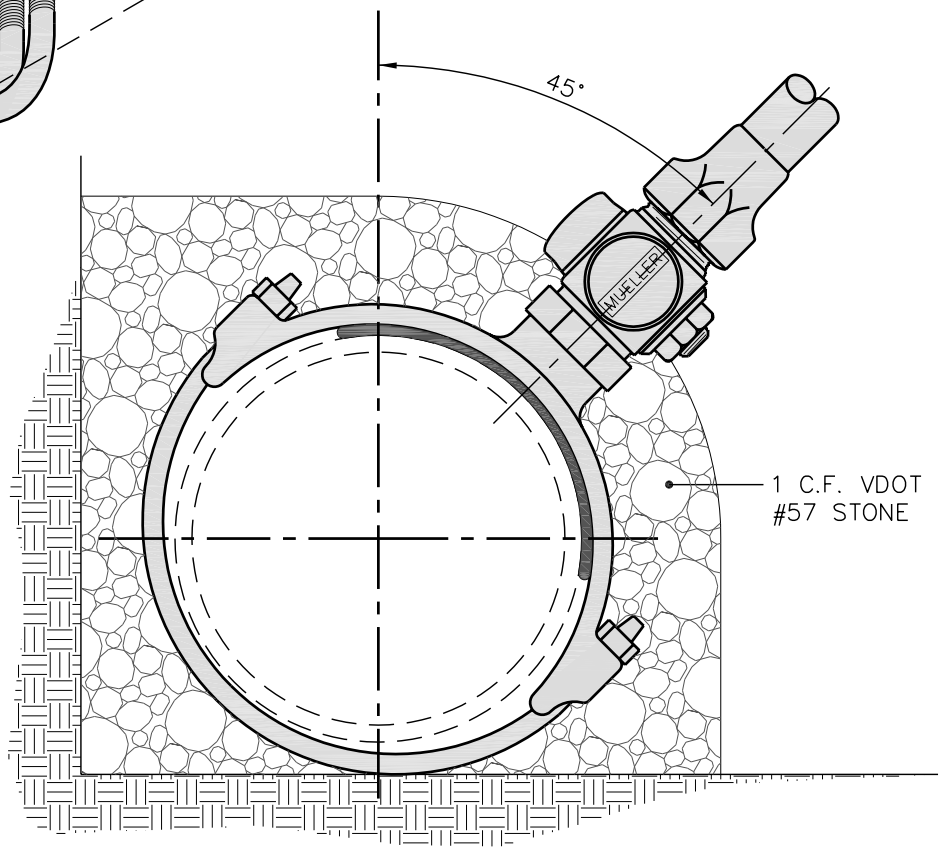

SECTION VIEW

THE CITY OF LYNCHBURG

TYP. DOUBLE STRAP SERVICE SADDLE FOR 6" THRU 12" MAINS

USE WITH THE CITY OF LYNCHBURG STANDARD SPECIFICATIONS ONLY

SCALE:	DETAIL #
NOT TO SCALE	26.14
REVISION DATE:	SHEET #:
10–21–04	1 OF 1