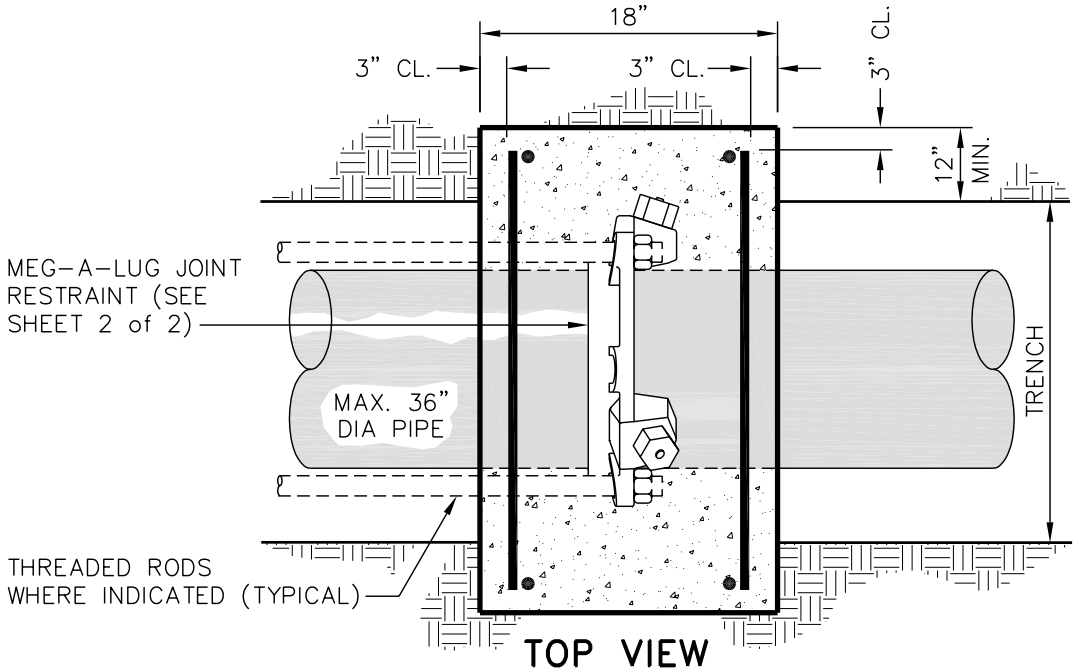

TOP VIEW

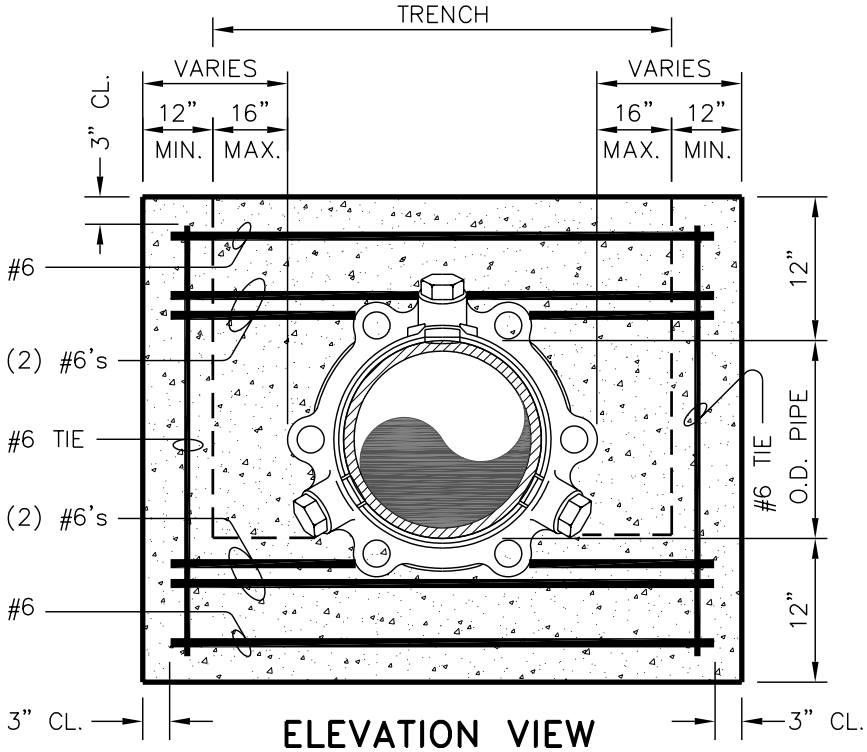

ELEVATION VIEW

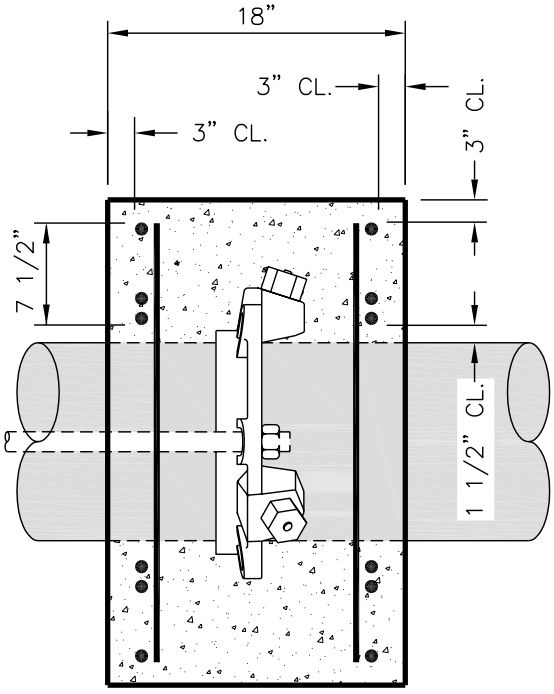

SIDE VIEW

NOTES:

1. CONCRETE SHALL BE 3000 P.S.I.
2. REINFORCING BARS SHALL BE DEFORMED, AND TIED TOGETHER.
3. TRENCH BOTTOM WIDTH IN VICINITY OF THRUST BLOCK(S) INSTALLATION SHALL BE THE MINIMUM WIDTH.
4. BACKFILL AND COMPACT IN 6" LAYERS.
5. PLACE THRUST COLLAR ON ONE FULL JOINT OF PIPE.
6. LAST JOINT OF PIPE WITH THRUST COLLAR TO BE MECHANICAL JOINT PIPE.
7. PLACE MEG-A-LUG 4' FROM PLUG END OF PIPE.

THE CITY OF LYNCHBURG

THRUST COLLAR & BLOCKING DETAIL

USE WITH THE CITY OF LYNCHBURG STANDARD SPECIFICATIONS ONLY

SCALE:	DETAIL #
NOT TO SCALE	26.04
REVISION DATE: 10-21-04	SHEET #: 1 OF 2