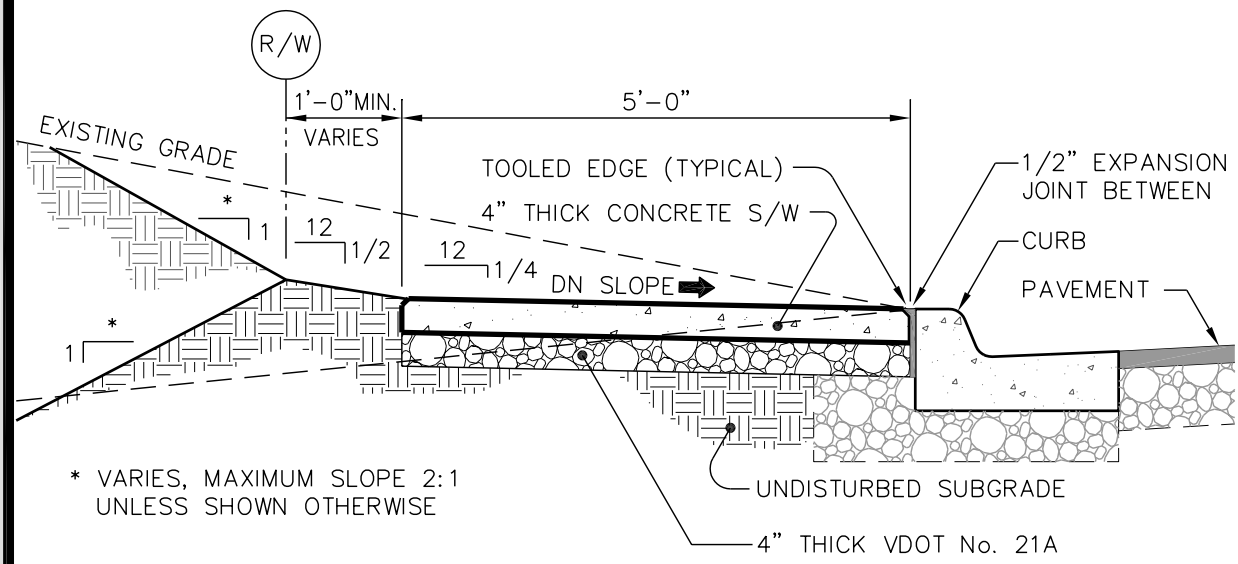

TYPICAL SIDEWALK without PARKWAY

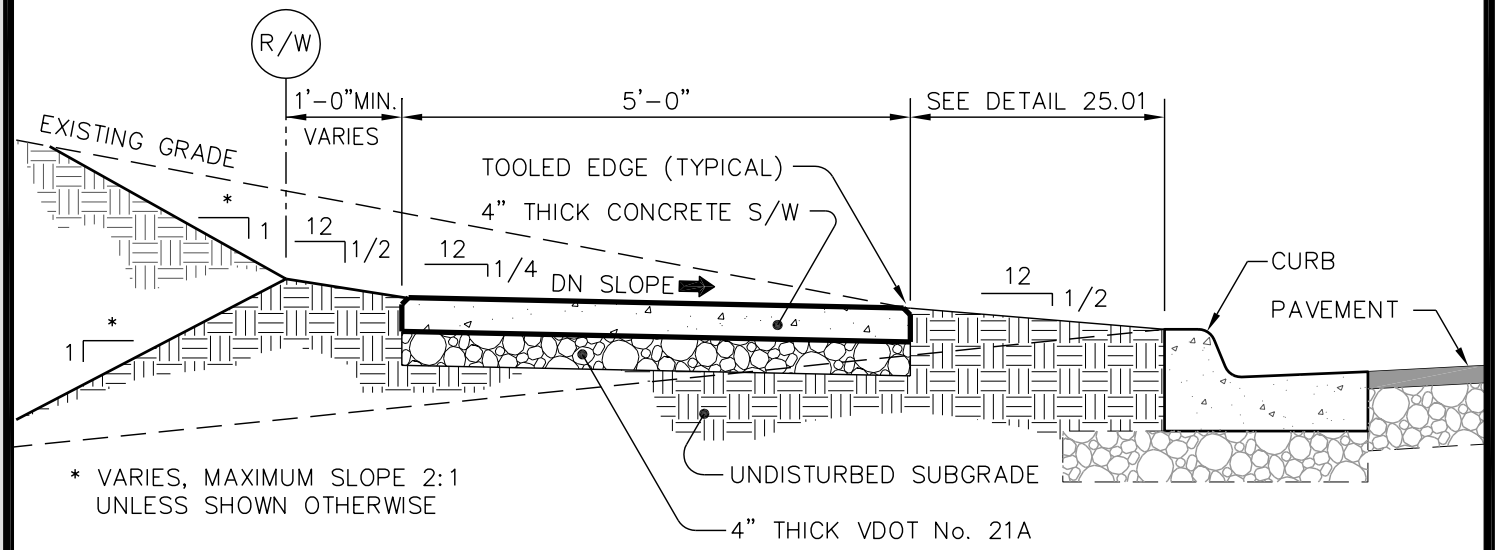

TYPICAL SIDEWALK with PARKWAY

NOTES:

1. PROVIDE 3/4" DEEP TOOLED SCORE AT 5'-0" O.C.
2. EXPANSION JOINTS TO BE PLACED 30'-0" O.C. LONGITUDINALLY, ADJACENT TO CURBS, AND WHEN BUTTING EXISTING STRUCTURES, CONCRETE, OR BUILDINGS.

THE CITY OF LYNCHBURG			
STANDARD SIDEWALK DETAIL		SCALE: NOT TO SCALE	DETAIL # 25.05
		REVISION DATE: 10-21-04	SHEET #: 1 OF 1
USE WITH THE CITY OF LYNCHBURG STANDARD SPECIFICATIONS ONLY			