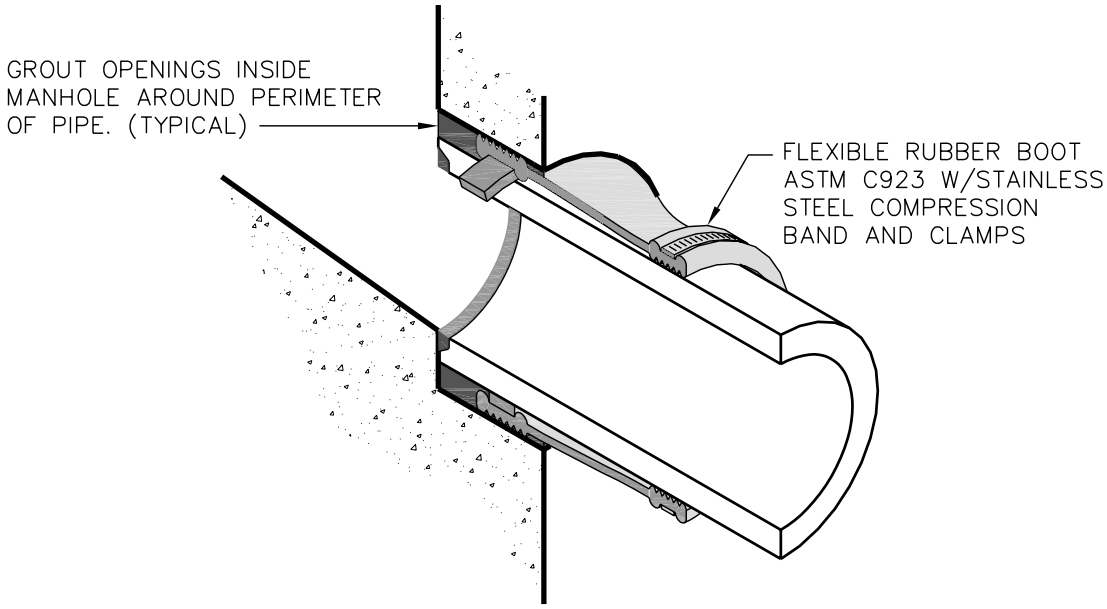

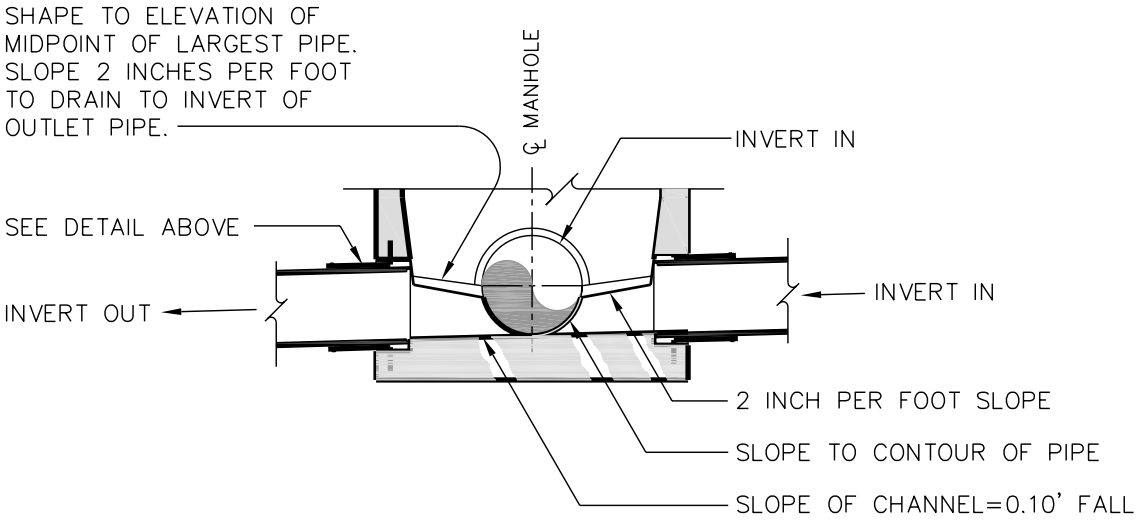

SECTION A–A

NOTES:

1. MAXIMUM DEPTH 4' DIAMETER MANHOLE = 20' (SEE SEWER DESIGN SECTION FOR OTHER REQUIREMENTS / LIMITATIONS).
2. THE INVERT SHAPING AS SHOWN SHALL CONSIST OF 3,000 PSI CONCRETE TROWELLED TO A SMOOTH SURFACE WITH NO AGGREGATE EXPOSED.
3. DETAILS OF INVERT SHAPING AS SHOWN HEREON ARE FOR EXAMPLE PURPOSES ONLY. EACH MANHOLE IS TO BE SHAPED INDIVIDUALLY TO BEST FIT THE PARTICULAR INLET AND OUTLET CONFIGURATION AND FLOW LINES.
4. WHEN DIFFERENT DIAMETER PIPES ARE USED FROM INVERT IN TO INVERT OUT, PROVIDE A SMOOTH TRANSITION THROUGH THE INVERT.

THE CITY OF LYNCHBURG

PRECAST CONCRETE 4' DIAMETER MANHOLE	SCALE: NOT TO SCALE	DETAIL # 27.02
USE WITH THE CITY OF LYNCHBURG STANDARD SPECIFICATIONS ONLY	REVISION DATE: 10–21–04	SHEET #: 2 OF 2