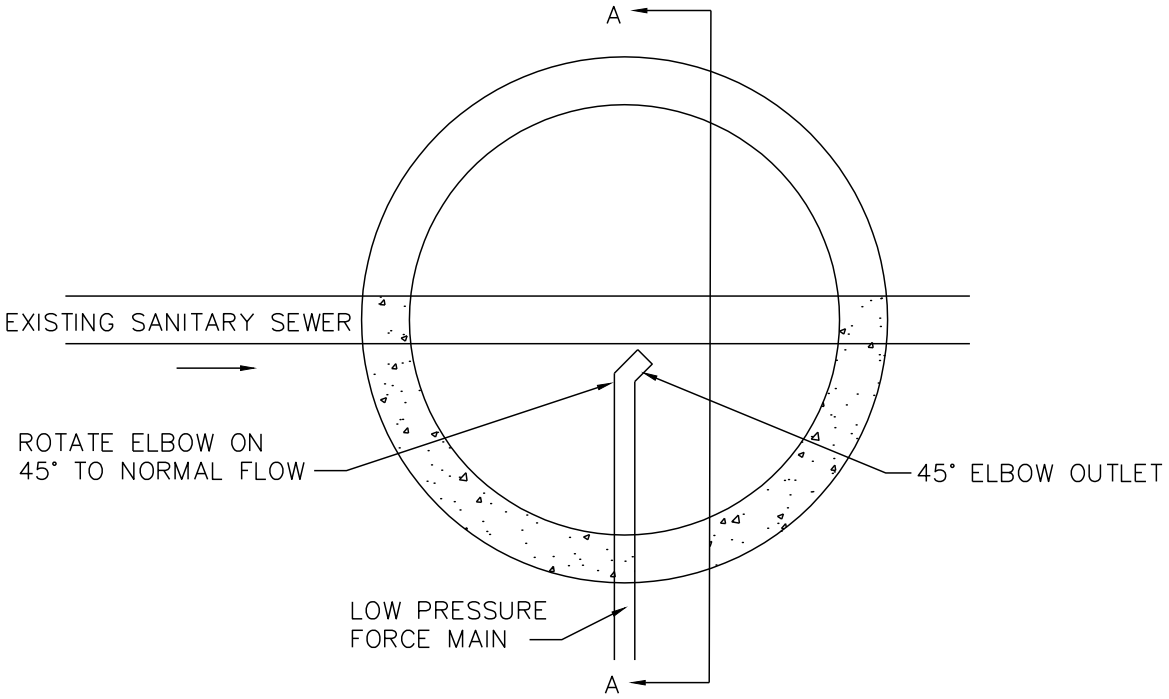

PLAN VIEW

TYPICAL DROP CONNECTION LPFM IN EXISTING MANHOLE

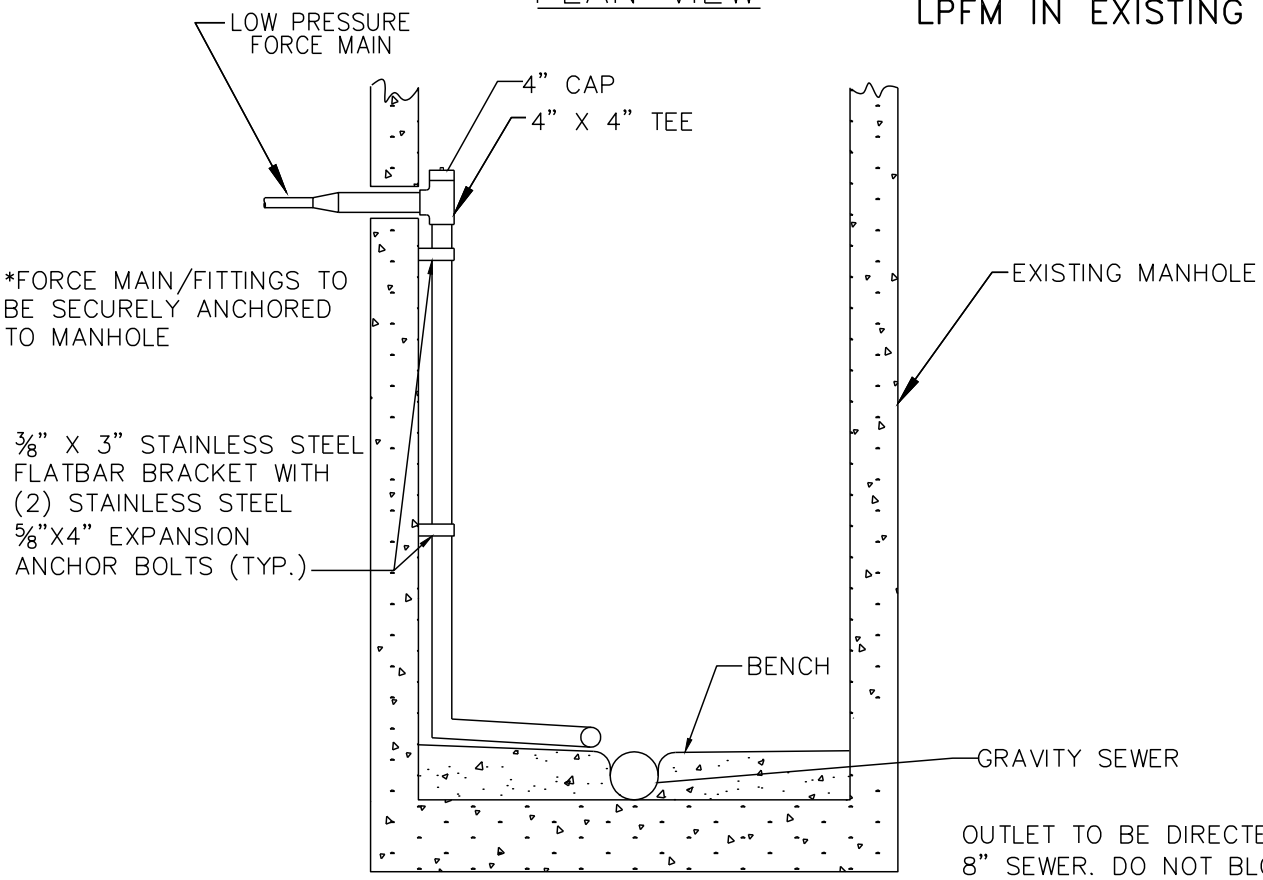

OUTLET TO BE DIRECTED TOWARDS 8" SEWER. DO NOT BLOCK OPENING FOR MAINTENANCE.

SECTION A–A VIEW

THE CITY OF LYNCHBURG

LPFM–FORCE MAIN TERMINAL MANHOLE	SCALE: NOT TO SCALE	DETAIL # 27.29
	REVISION DATE: 12-12-2014	SHEET #: 1 OF 1

USE WITH THE CITY OF LYNCHBURG STANDARD SPECIFICATIONS ONLY