FRAME

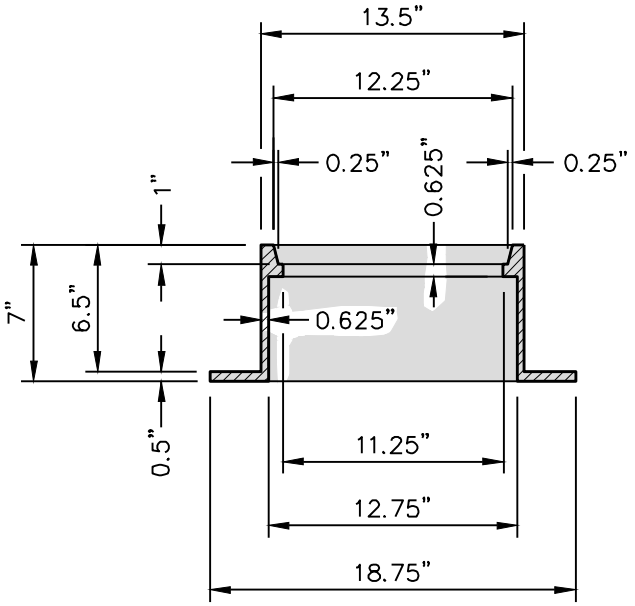

SECTION A–A

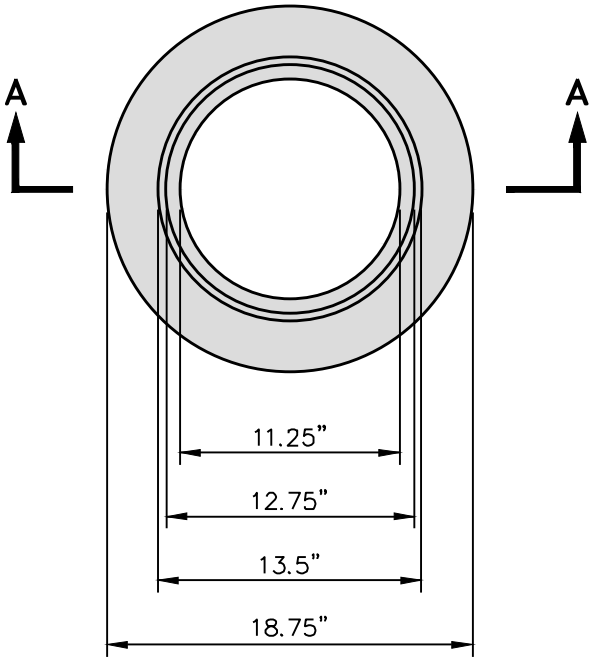

PLAN VIEW

COVER

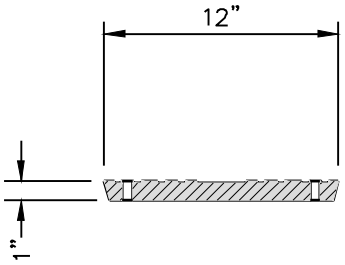

SECTION B–B

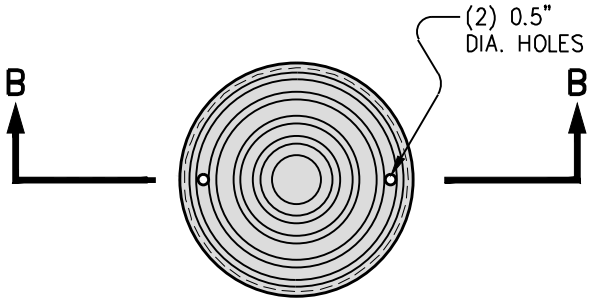

PLAN VIEW

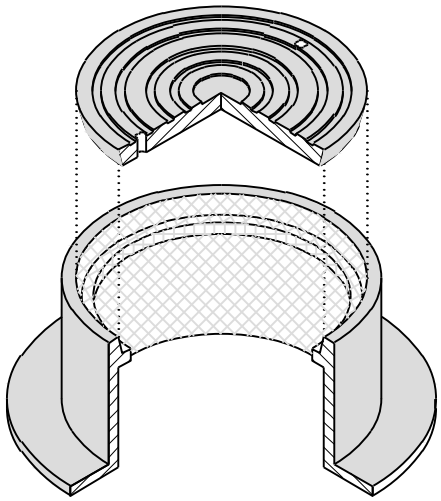

ISOMETRIC VIEW

LAMPSTACK FRAME and COVER

THE CITY OF LYNCHBURG

TYPICAL PVC SEWER LATERAL CLEANOUT WITH IN–LINE WYE

USE WITH THE CITY OF LYNCHBURG STANDARD SPECIFICATIONS ONLY

SCALE:	DETAIL #
NOT TO SCALE	27.15
REVISION DATE:	SHEET #:
12–12–2014	2 OF 2