FRAME

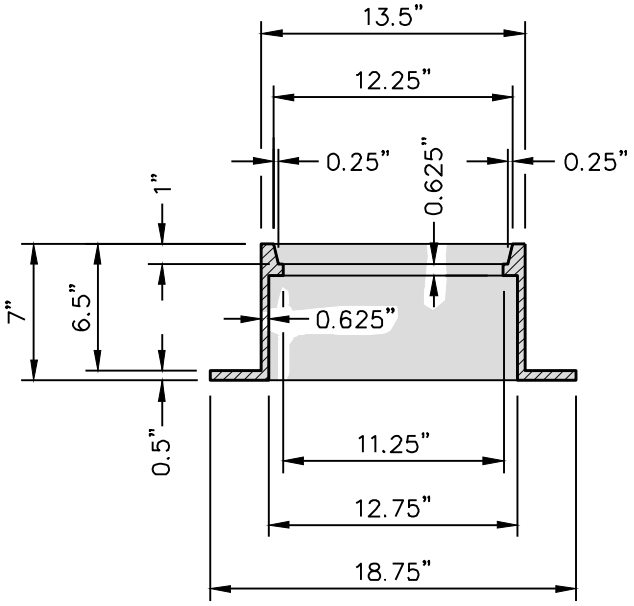

SECTION A–A

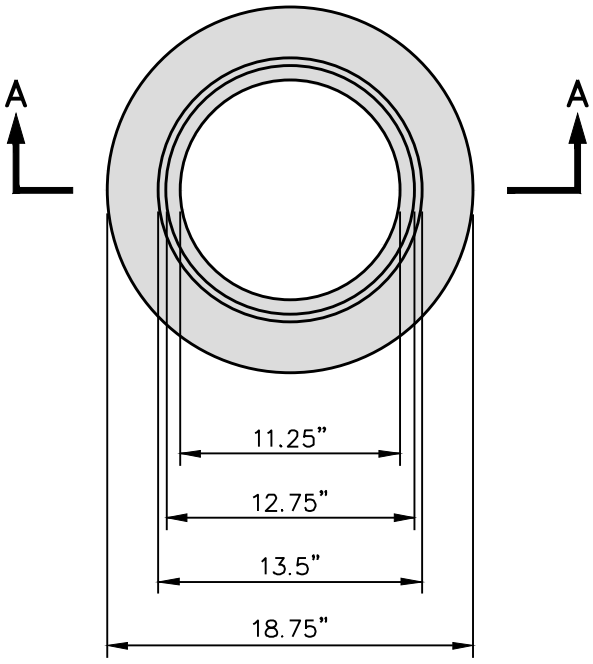

PLAN VIEW

COVER

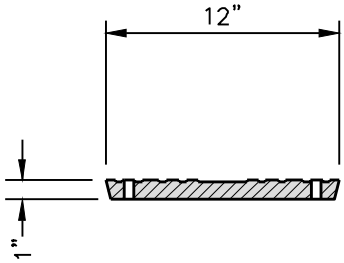

SECTION B–B

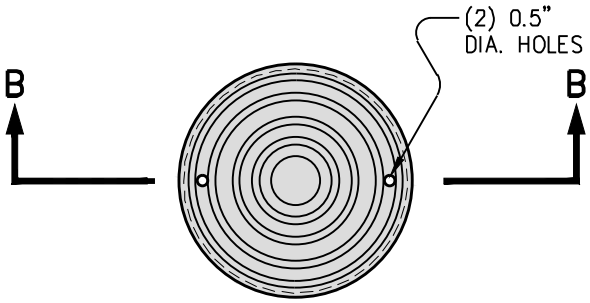

PLAN VIEW

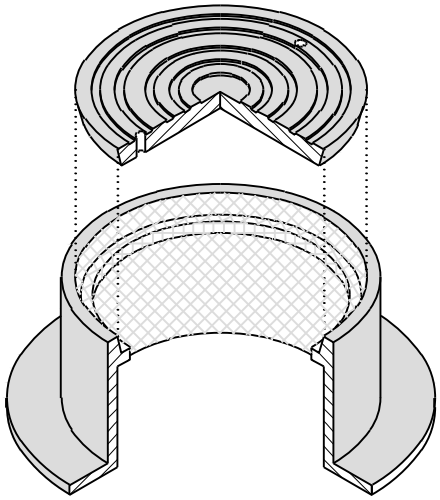

ISOMETRIC VIEW

THE CITY OF LYNCHBURG

LAMPSTACK
FRAME and COVER

USE WITH THE CITY OF LYNCHBURG STANDARD SPECIFICATIONS ONLY

SCALE:	DETAIL #
NOT TO SCALE	27.09
REVISION DATE:	SHEET #:
12-12-2014	1 OF 1