ISOMETRIC VIEW

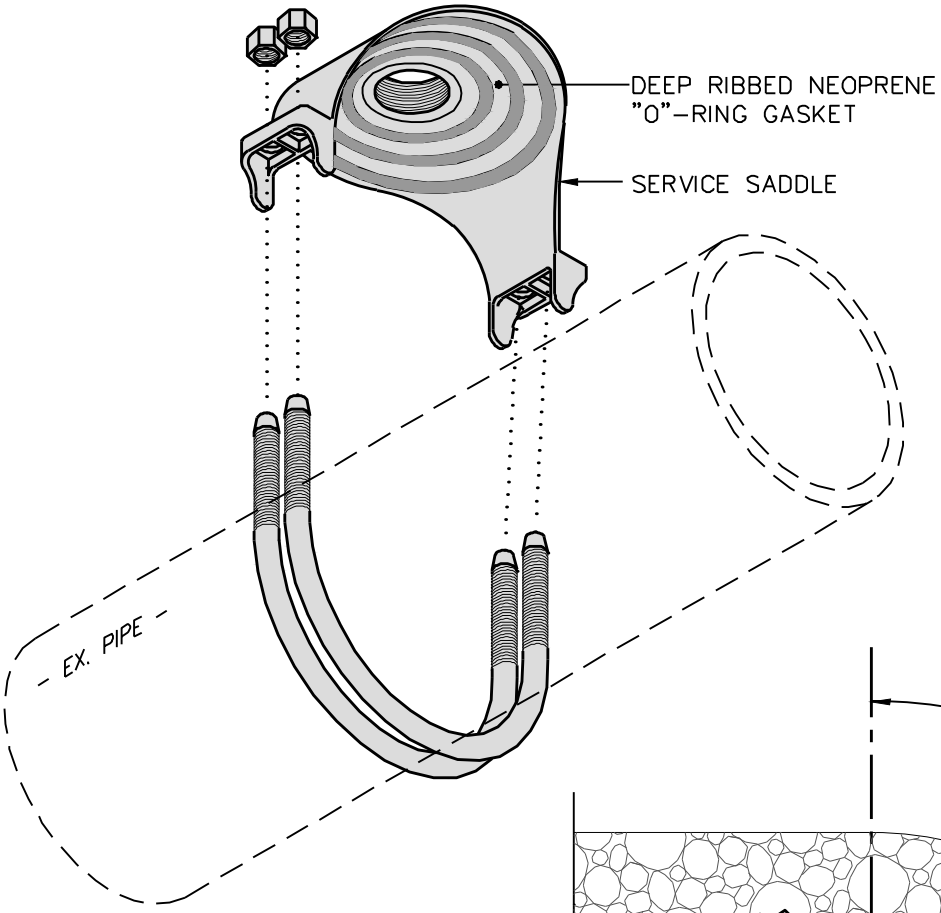

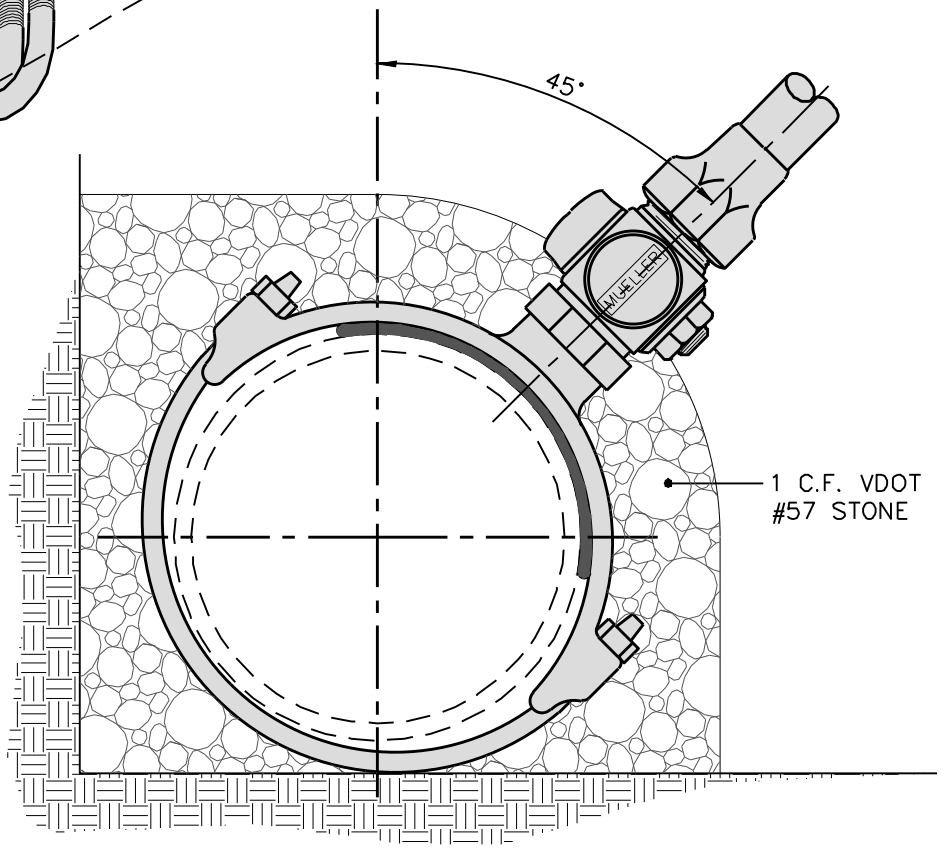

SECTION VIEW

THE CITY OF LYNCHBURG

TYP. DOUBLE STRAP SERVICE SADDLE FOR 6" THRU 12" MAINS	SCALE: NOT TO SCALE	DETAIL # 26.14
USE WITH THE CITY OF LYNCHBURG STANDARD SPECIFICATIONS ONLY	REVISION DATE: 12-12-2014	SHEET #: 1 OF 1