Riverside Park

Train Shed Summary Report

Prepared By:

JMA

300 West Main Street, Suite 201

Charlottesville, Virginia 22903

November 2008

Project Context: Site Topography

The site for the train exhibit is relatively flat due to the track spur that was used to get the locomotive and components into the park. However, there is a fall in elevation from the south to the north of the spur site where the locomotive, tender and caboose are located. The east side of the site is a sloping hill. A major circulation route in the park is at the crest of this hill and the 16-20 foot elevation affords the visitor views below to the train. To the west side of the site is a mixture of forest vegetation and debris from clearing the train site. Also, part of the Alpine Trail is to the west of the train site. Visitor access to the train is confined to an existing path from the main circulation system which brings the visitor in at the north end of the site. Due to the steep topography, the path to the train site exhibit is not universally accessible.

Figure 1: View of train site to the south

Figure 2: Existing path to the train site

Figure 3: View of train site to the north

Figure 4: West side of train site with views from the Alpine Trail

Figure 5: Train with surrounding security fence

Security, Public Access, and Viewsheds

The train, tender and caboose are surrounded on the site by chain link and barbed wire fence. The fence is necessary for security and to protect the caboose which is currently being restored. Visitors to the park can pass by the train site from a path uphill to the east. The train is easily viewed from that vantage point and becomes a part of the visitor experience for those who are walking or jogging around the main pedestrian circulation system. There is also a gravel spur path that branches off the main circulation trail and leads to the north end of the train site. Visitors can take this path and walk to the fence, but there is no public access through the fence to the train itself. Also, visitors who walk along the Alpine Trail can view the train site from the west through viewsheds in the forest vegetation. The train site is also visible from the ruins of the former swimming pool which was filled with soil and planted with grass in 1968.

Figure 6: View from access path to the train site

Figure 7: View to pool ruin from the train site

Train Exhibit in the Context of the Master Plan for Riverside Park

In the master plan for Riverside Park, the train exhibit was not only considered an important interpretive opportunity for the Park, but a special feature that was the focus of many wonderful memories for park visitors. It was also seen in the context of the effort to develop a transportation collection within the park. In the master plan the train exhibit is part of the larger character area that is defined by the train, the Fink truss bridge, and the packet boat *Marshall.*

The master plan also proposes for this character area:

- a new accessible overlook to the river and the train trestle
- a new path system that connects the train and the Fink Truss Bridge
- restoration of the small stone bridge and the glade to the north of the train exhibit
- restoration of the bicentennial garden as a central element connecting the transportation collection

For the train exhibit the Master Plan proposes:

- a new train shed
- elevated access to the locomotive cab from the hillside to the east of the train
- an interpretive overlook from the major circulation trail,
- new fencing that is secure, transparent, and attractive
- new paths that connect the train exhibit to the proposed amphitheater and interpretive element at the pool ruin
- new path that connects the train exhibit to the small stone bridge and the restored glade
- restored viewsheds to the train exhibit from the Alpine Trail to the west of the site
- restored pathway access and drainage way at the north of the site

Train Shed Drawings

3 A101 NORTHWEST ELEVATION
SCALE: 1/4" = 1'-0"

4 A101 SOUTHEAST ELEVATION
SCALE: 1/4" = 1'-0"

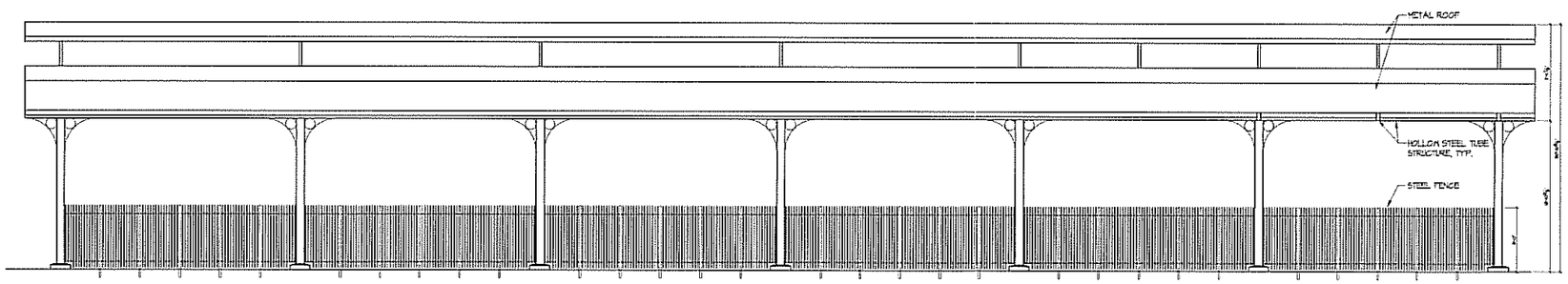

2 A101 NORTHEAST AND SOUTHWEST ELEVATION
SCALE: 1/4" = 1'-0"

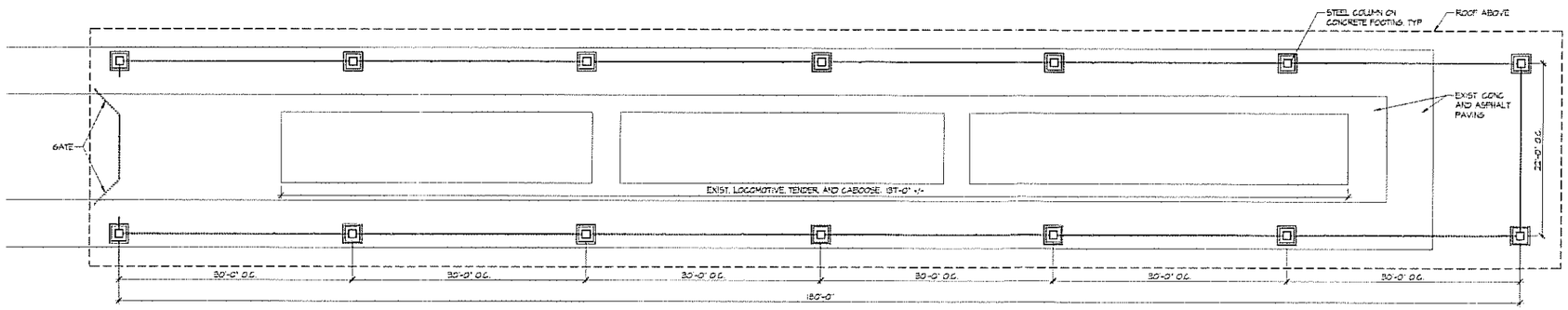

1 A101 PLAN
SCALE: 1/8" = 1'-0"

Train Shed at
Riverside Park
Lynchburg, Virginia

for the

City of Lynchburg
Parks and Recreation

JMA
John Milner Associates, Inc.

5250 Cherokee Avenue
Third Floor
Alexandria, Virginia 22312

t: 703 354 9737
f: 703 642 1837

johnmilnerassociates.com

Structural Engineer

FOR REVIEW ONLY
NOT FOR CONSTRUCTION

project:	LYNCHMP
drawn:	RBS
checked:	---
phase:	-
date:	11 June 2008
revised:	

Plan and Elevations

A101

Copyright 2008 John Milner Associates, Inc.

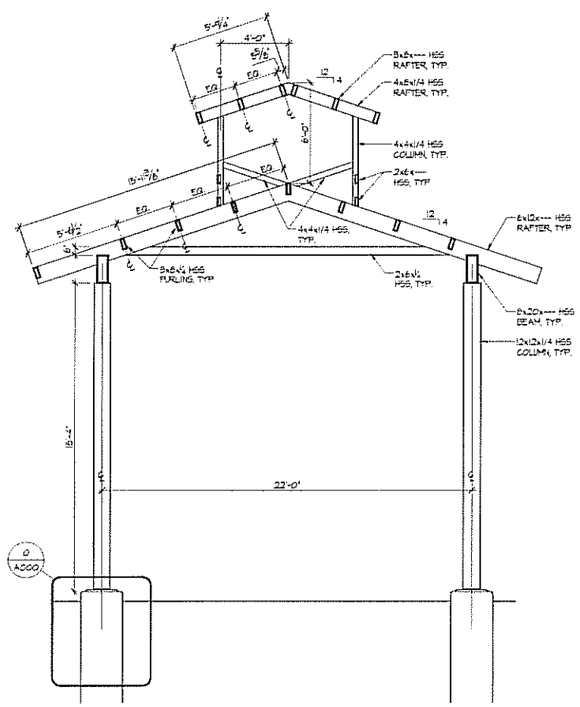

1 A301 CROSS SECTION
SCALE: 1/4" = 1'-0"

2 A301 PARTIAL LONGITUDINAL SECTION
SCALE: 1/4" = 1'-0"

Train Shed at

Riverside Park

Lynchburg, Virginia

for the

City of Lynchburg
Parks and Recreation

JMA
John Milner Associates, Inc.

5250 Cherokee Avenue
Third Floor
Alexandria, Virginia 22312

t: 703 354 9737
f: 703 642 1837

johnmilnerassociates.com

Structural Engineer

FOR REVIEW ONLY
NOT FOR CONSTRUCTION

project:	-
drawn:	RBS
checked:	---
phase:	-
date:	-
revised:	

Sections

A301

Copyright 2008 John Milner Associates, Inc.

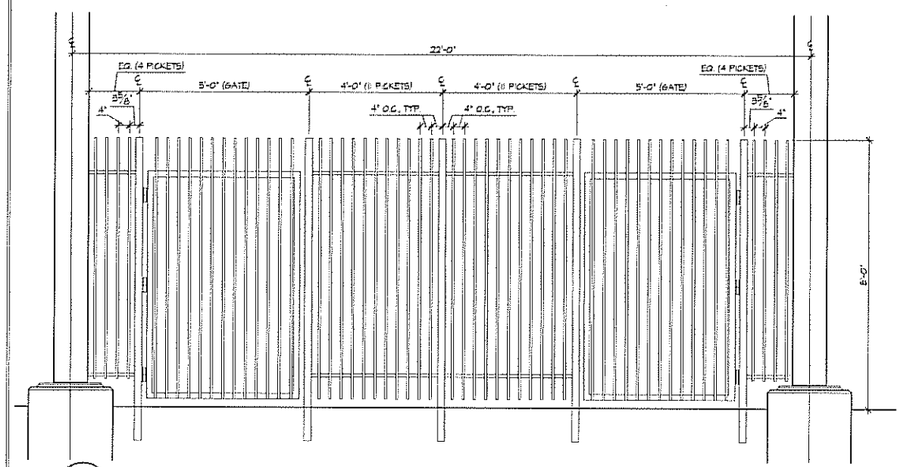

3 / A401 SOUTHEAST ELEVATION WITH GATES
SCALE: 1/2" = 1'-0"

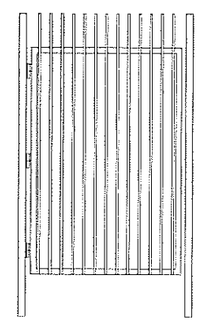

6 / A501 GATE
SCALE: 1/2" = 1'-0"

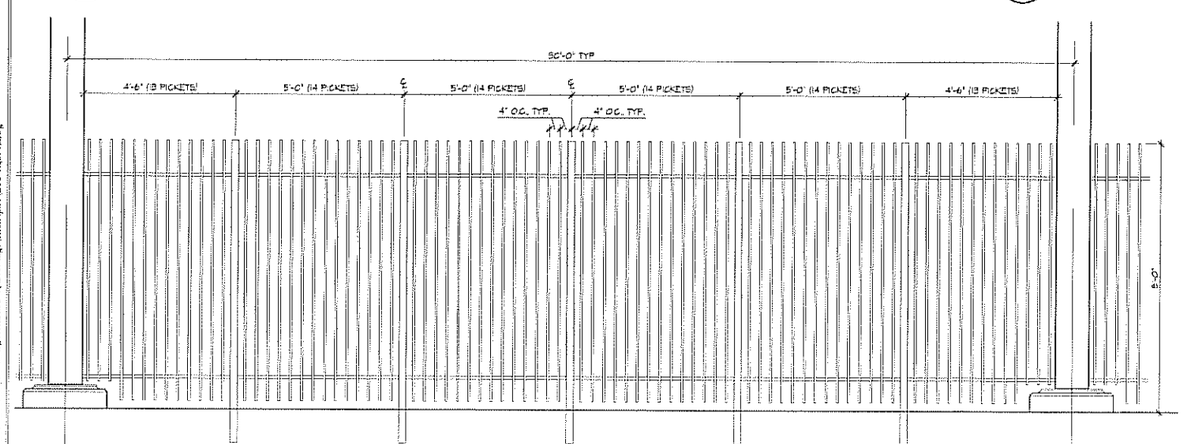

1 / A401 NORTHWEST/SOUTHEAST FENCE SEGMENT ELEVATION
SCALE: 1/2" = 1'-0"

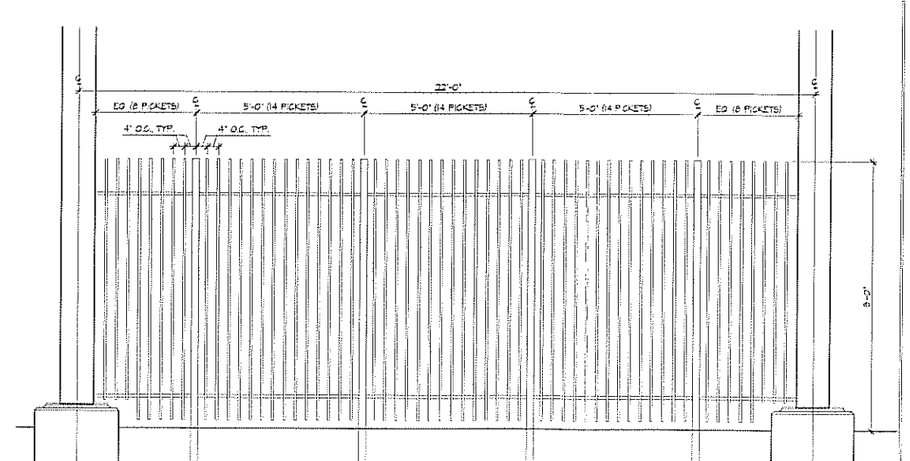

2 / A401 NORTHWEST ELEVATION
SCALE: 1/2" = 1'-0"

Train Shed at
Riverside Park
Lynchburg, Virginia

for the

City of Lynchburg
Parks and Recreation

JMA
John Milner Associates, Inc.

5250 Cherokee Avenue
Third Floor
Alexandria, Virginia 22312

t: 703 354 9737
f: 703 642 1837

johnmilnerassociates.com

Structural Engineer

FOR
REVIEW
ONLY
NOT FOR
CONSTRUCTION

project:	-
drawn:	RBS
checked:	---
phase:	-
date:	-
revised:	

Enlarged Elevations

A401

Copyright 2008 John Milner Associates, Inc.

Jan 21, 2008 - 3:09pm M:\LYNCHBMP-Lbrg2\TrainShed\14 Drawings\Archipelago\LT3-A401.dwg

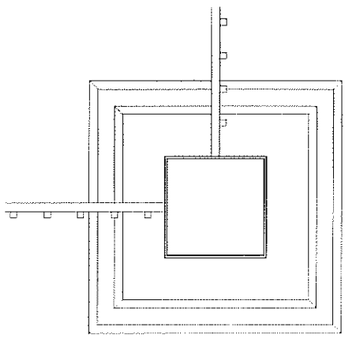

A501 COLUMN AND FOOTING
SCALE: 1 1/2" = 1'-0"

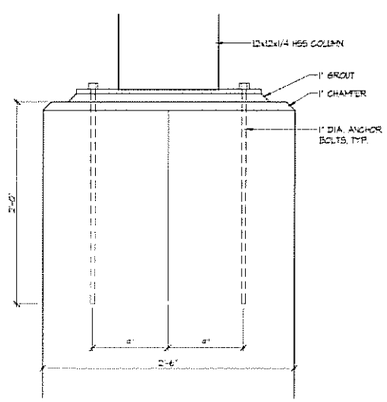

A501 ANCHOR BOLTS AT FOOTING
SCALE: 1 1/2" = 1'-0"

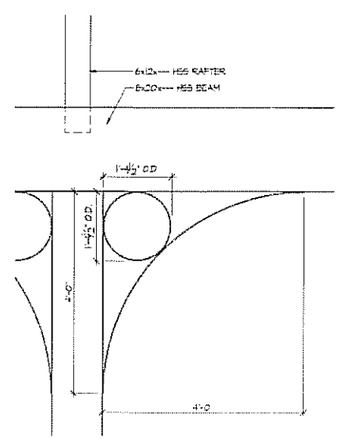

A501 COLUMN / BEAM CONNECTION
SCALE: 3/4" = 1'-0"

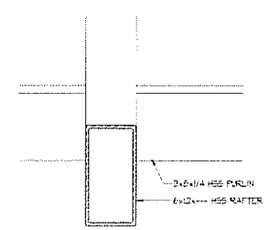

A501 RAFTER AT PURLIN
SCALE: 1 1/2" = 1'-0"

Train Shed at

Riverside Park

Lynchburg, Virginia

for the

City of Lynchburg
Parks and Recreation

JMA
John Milner Associates, Inc.

5250 Cherokee Avenue
Third Floor
Alexandria, Virginia 22312

t: 703 354 9737
f: 703 642 1837

johnmilnerassociates.com

Structural Engineer

FOR
REVIEW
ONLY
NOT FOR
CONSTRUCTION

project:	-
drawn:	RBS
checked:	---
phase:	-
date:	-
revised:	

Details

A501

Copyright 2008 John Milner Associates, Inc.

Next Steps

Before a train shed can be designed and taken to 100% construction drawings, the following information is necessary:

- One foot contour survey of the entire train exhibit area and slopes on all sides
- Surveyed location of utility poles and wires, underground utilities, existing paving, and fencing
- Exact measurements to the locomotive 'engineer compartment' above grade
- Exact measurement of length, width, and height of the locomotive, tender and caboose
- Soil borings for bearing capacity
- Viewshed analysis to the train from the high elevations
- Research on materials that are sustainable and compatible with the character of a historic park
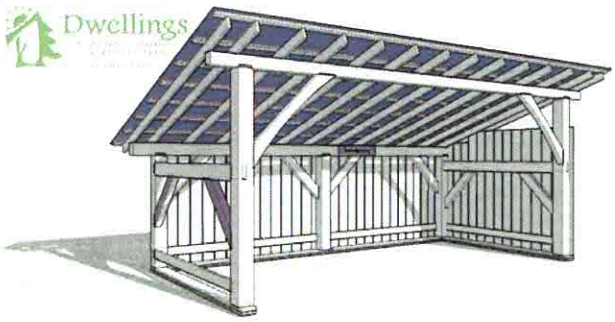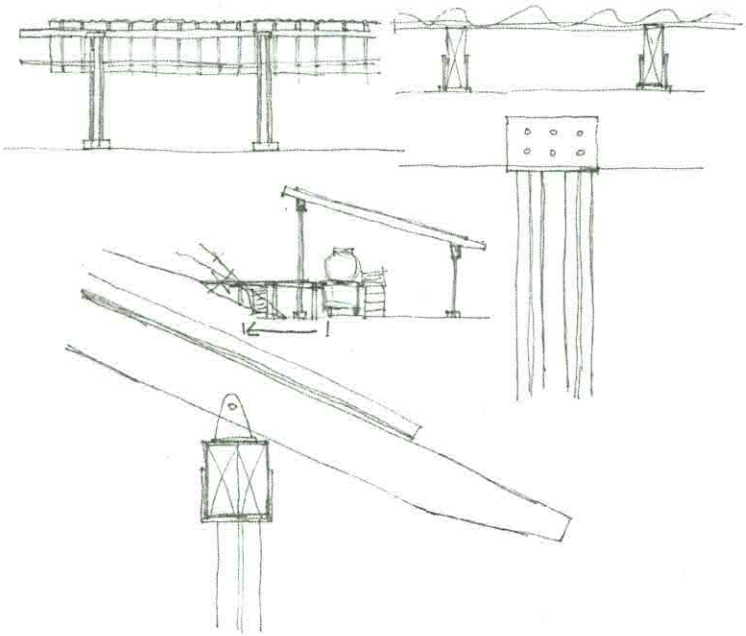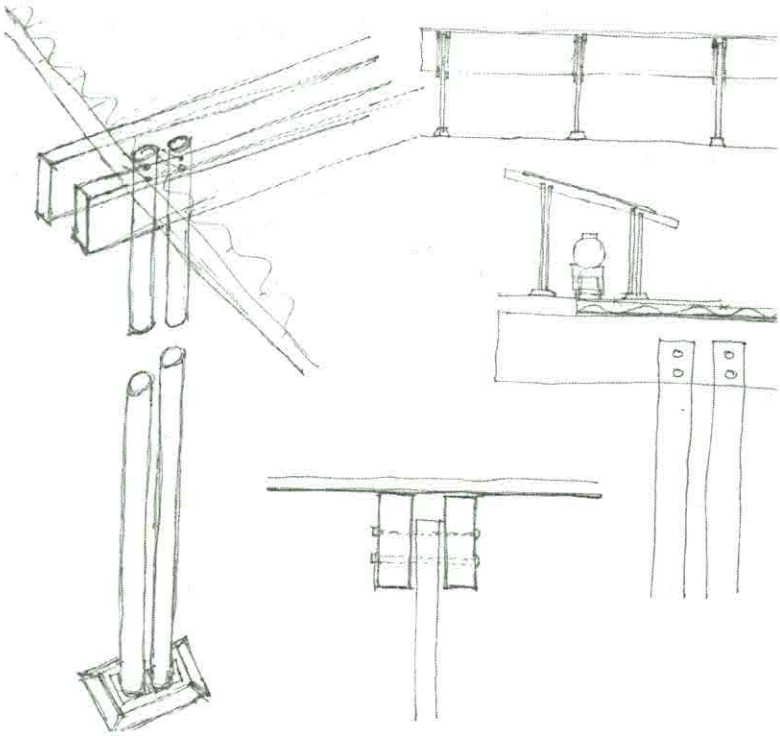
Images and Sketches for Potential Solutions