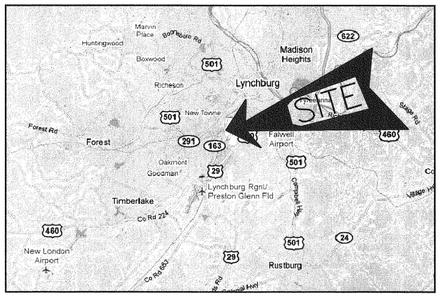

VICINITY MAP

NORTH

CITY OF LYNCHBURG
INFORMATION TECHNOLOGY DEPARTMENT
GENERATOR UPGRADE
LYNCHBURG, VIRGINIA

FOR BIDDING AND CONSTRUCTION
SEPTEMBER 2, 2011

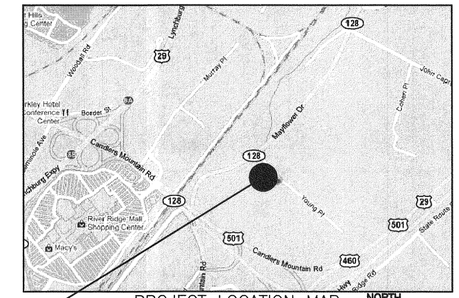

PROJECT LOCATION MAP

NORTH

BUILDING LOCATION

GENERAL NOTES:

1. THESE DRAWINGS ARE SCHEMATIC IN NATURE AND ARE NOT INTENDED FOR USE AS FABRICATION DRAWINGS. THESE DRAWINGS INDICATE THE GENERAL AND APPROXIMATE SIZE AND LOCATION OF MATERIAL. FIELD VERIFY ALL DIMENSIONS AND LOCATIONS PRIOR TO BEGINNING WORK. ALL UTILITIES NOTED ON PLANS ARE APPROXIMATE AND CONTRACTOR SHALL FIELD VERIFY LOCATION.
2. ALL WORK SHALL BE INSTALLED IN ACCORDANCE WITH APPLICABLE CODES AND REGULATIONS, INCLUDING, BUT NOT LIMITED TO, THE 2009 VIRGINIA UNIFORM STATEWIDE BUILDING CODE AND ASSOCIATED CODES OF REFERENCE. REFER TO APPLICABLE CODES LIST THIS SHEET.
3. CONTRACTOR SHALL OBTAIN ALL BUILDING AND TRADE PERMITS FOR CONSTRUCTION, HOWEVER THE CITY OF LYNCHBURG SHALL WAIVE ALL FEES REQUIRED FOR PERMITS.
4. ALL MATERIAL SHALL BE NEW UNLESS OTHERWISE NOTED. MATERIALS ARE BASED ON THE INDICATED MANUFACTURERS/MODELS AND ARE INTENDED ONLY TO SHOW THE GENERAL SIZE, CONFIGURATION, LOCATION, CONNECTIONS, AND SUPPORT FOR INDICATED MATERIAL WITH RELATION TO OTHER BUILDING SYSTEMS. MATERIAL BY ANY MANUFACTURER THAT MEETS THE SCHEDULED CRITERIA IS ACCEPTABLE. CONTRACTOR SHALL BE RESPONSIBLE FOR COORDINATING ACTUAL INSTALLED MATERIAL AND EQUIPMENT AND ASSOCIATED CHANGES.
5. THE CONTRACTOR SHALL COORDINATE THE WORK WITH EXISTING CONDITIONS, INCLUDING BEAMS, COLUMNS, AND OTHER OBSTRUCTIONS, WHETHER OR NOT SUCH IS SHOWN ON DRAWINGS.
6. THE CONTRACTOR SHALL COORDINATE THE WORK BETWEEN ALL TRADES. MATERIAL AND EQUIPMENT LOCATIONS SHALL BE COORDINATED BETWEEN ARCHITECTURAL, MECHANICAL, ELECTRICAL, AND DEMOLITION PLANS TO AVOID CONFLICTS.
7. EXISTING MATERIAL TO BE REMOVED SHALL BE REMOVED CAREFULLY TO AVOID DAMAGING MATERIAL TO REMAIN. THE CONTRACTOR SHALL BE RESPONSIBLE FOR DAMAGE THAT OCCURS TO EXISTING MATERIAL TO REMAIN OR TO BE RELOCATED DURING DEMOLITION AND CONSTRUCTION.
8. ALL MATERIAL AND EQUIPMENT SHALL BE INSTALLED ACCORDING TO MANUFACTURER'S WRITTEN INSTALLATION INSTRUCTIONS, MAINTAINING ALL REQUIRED CLEARANCES AND WITH ALL COMPONENTS ACCESSIBLE AND SERVICEABLE.
9. CONTRACTOR SHALL PROVIDE MATERIAL DATA SUBMITTALS FOR ALL NEW MATERIAL WHERE REQUIRED BY EACH DISCIPLINE. A LIST OF SUBMITTALS IS PROVIDED ON THIS DRAWING. REFER TO INDIVIDUAL SHEETS FOR ADDITIONAL SUBMITTAL REQUIREMENTS.
10. THE CONTRACTOR SHALL BE RESPONSIBLE FOR ASSEMBLING OPERATION AND MAINTENANCE MANUALS CONTAINING ALL MATERIAL SUBMITTALS, INSTALLATION AND OPERATING INSTRUCTIONS, AND WARRANTY INFORMATION. THREE (3) COPIES OF O&M MANUALS SHALL BE SUBMITTED TO THE OWNER AT THE TIME OF SUBSTANTIAL COMPLETION.
11. THE CONTRACTOR SHALL BE RESPONSIBLE FOR MAINTAINING A SET OF AS-BUILT DRAWINGS ON SITE WHICH INDICATE IN RED ALL DEVIATIONS FROM ORIGINAL CONSTRUCTION DOCUMENTS, INCLUDING APPROVED CONSTRUCTION CHANGE ORDERS. AS-BUILT DRAWINGS SHALL BE SUBMITTED TO THE OWNER AT THE TIME OF SUBSTANTIAL COMPLETION. AS-BUILT DRAWINGS SHALL BE CLEARLY LEGIBLE AND COMPLETE.
12. CONTRACTOR SHALL KEEP PUBLIC AREAS FREE OF TRASH AND CONSTRUCTION DEBRIS AND CLEAN ENTIRE WORK AREA ON A DAILY BASIS.
13. TEMPORARY POWER AND WATER SERVICE ARE AVAILABLE FOR THE CONTRACTOR'S USE. CONTRACTOR SHALL COORDINATE ACCESS WITH OWNER AND SHALL PROVIDE ANY REQUIRED TEMPORARY CONNECTIONS AND EXTENSIONS.
14. CONTRACTOR SHALL PROVIDE PORTABLE TOILETS FOR CONSTRUCTION PERSONNEL.
15. CONTRACTOR SHALL VISIT THE SITE TO BECOME FAMILIAR WITH THE SCOPE OF WORK AND TO VERIFY EXISTING CONDITIONS PRIOR TO BIDDING THIS PROJECT. ANY DISCREPANCIES OR AMBIGUOUS ITEMS MUST BE REPORTED TO THE OWNER FOR CLARIFICATION PRIOR TO BIDDING.
16. THE CONTRACTOR IS TYPICALLY PERMITTED TO WORK BETWEEN 7:00 AM AND 6:00 PM MONDAY THRU FRIDAY. WORK OUTSIDE THESE HOURS SHALL BE COORDINATED WITH OWNER'S PROJECT MANAGER DURING CONSTRUCTION.
17. CONTRACTOR SHALL PROVIDE A DUST-PROOF BARRIER BETWEEN THE CONSTRUCTION ZONE AND OCCUPIED PORTIONS OF THE BUILDING. CONTRACTOR SHALL FILTER EXISTING HVAC GRILLES IN WORK AREA TO MITIGATE SPREAD OF DUST INTO OCCUPIED AREAS OF THE BUILDING.
18. CONTRACTOR SHALL PROTECT THE BUILDING, ADJACENT FEATURES, ROADWAYS, WALKWAYS, SITE IMPROVEMENTS, ETC. AS REQUIRED FROM DAMAGE AND CORRECT DAMAGE RESULTING FROM CONSTRUCTION ACTIVITIES TO THE SATISFACTION OF THE OWNER.
19. CONTRACTOR SHALL COLLECT DEMOLISHED MATERIALS AND PLACE IN APPROPRIATE DISPOSAL CONTAINERS. DEMOLISHED MATERIALS SHALL BE PROMPTLY REMOVED FROM THE OWNER'S PROPERTY AND DISPOSED OF LEGALLY.
20. CONTRACTOR SHALL COORDINATE MATERIAL STORAGE AND DUMPSTER LOCATION WITH OWNER DURING CONSTRUCTION.
21. CONTRACTOR SHALL PROVIDE PRE-DEMOLITION PHOTOGRAPHIC OR VIDEOGRAPHIC DOCUMENTATION TO SHOW EXISTING CONDITIONS OF FINISHED SURFACES IN WORK AREA AND ADJOINING CONSTRUCTION INCLUDING SITE STORAGE AND ACCESS AREAS A MINIMUM OF 10 WORKING DAYS PRIOR TO COMMENCEMENT OF WORK.
22. CONTRACTOR SHALL NOTIFY OWNER SEVEN(7) DAYS IN ADVANCE OF ANY POWER INTERRUPTIONS INCLUDING BUT NOT LIMITED TO WATER, COMMUNICATIONS, ETC. COORDINATE OUTAGE WITH OWNER.
23. DEFINITIONS:

    FURNISH: SUPPLY AND DELIVER TO PROJECT SITE FOR INSTALLATION BY OTHERS.

    INSTALL: INSTALL ITEMS FURNISHED BY OTHERS, INCLUDING UNLOADING, TEMPORARILY STORING, UNPACKING, AND ASSEMBLY.

    PROVIDE: FURNISH AND INSTALL, COMPLETE AND READY FOR THE INTENDED USE.

    REMOVE: DETACH ITEMS FROM EXISTING CONSTRUCTION AND LEGALLY DISPOSE OF THEM OFF-SITE UNLESS INDICATED TO BE REMOVED AND SALVAGED OR REMOVED AND REINSTALLED.

    REMOVE AND REINSTALL: DETACH ITEMS FROM EXISTING CONSTRUCTION, PREPARE FOR REUSE, AND REINSTALL WHERE INDICATED.

    REMOVE AND SALVAGE: CAREFULLY DETACH FROM EXISTING CONSTRUCTION, IN A MANNER TO PREVENT DAMAGE, AND DELIVER TO OWNER.

DRAWING LIST:

DRAWING NO	TITLE
T1	TITLE SHEET
E1	LEGEND, ABBREVIATIONS, AND NOTES
E2	PARTIAL ELECTRICAL PLAN
E3	SINGLE LINE DIAGRAM – DEMOLITION
E4	SINGLE LINE DIAGRAM – NEW WORK
E5	DETAILS
E6	DETAILS
E7	CONCRETE PAD DETAILS (ADDITIVE BID ITEM #1)
E8	INTERNET MONITORING (ADDITIVE BID ITEM #2)

GENERAL INFORMATION:

PROJECT INFORMATION:

AGENCY:	CITY OF LYNCHBURG
PROJECT TITLE:	INFORMATION TECHNOLOGY DEPARTMENT GENERATOR UPGRADE
ADDRESS:	3550 YOUNG PLACE, LYNCHBURG, VIRGINIA 24501

APPLICABLE CODES:

BUILDING CODES	2009 VIRGINIA UNIFORM STATEWIDE BUILDING CODE – VUSBC (EFFECTIVE MARCH 1, 2011)
	NATIONAL ELECTRICAL CODE – NFPA-70 (2008)

ADDITIVE BID ITEM #1:

PROVIDE ONE CONCRETE PAD FOR GENERATORS IN LIEU OF TWO SMALLER CONCRETE PADS. SEE DRAWING E7.

ADDITIVE BID ITEM #2:

PROVIDE INTERNET APPLIANCE FOR MONITORING. SEE DRAWING E8.

SUBMITTALS LIST:

SUBMITTALS LIST TO BE VERIFIED BY CONTRACTOR WITH REQUIREMENTS THROUGHOUT THE CONSTRUCTION DOCUMENTS:

1. WORK SCHEDULE
2. SCHEDULE OF VALUES
3. GENERATORS
4. SOIL REPORT
5. GROUNDING MATERIALS
6. CONDUIT, WIRE, AND CABLE
7. 400A/3P CIRCUIT BREAKER
8. CONCRETE MIX
9. SNMP INTERNET APPLIANCE

ASBESTOS DISCLOSURE STATEMENT:

AN ASBESTOS INSPECTION WAS NOT PERFORMED. THE CONTRACTOR SHALL NOTIFY THE CITY'S PROJECT MANAGER OF ANY SUSPECTED MATERIALS FOR REMOVAL BY THE CITY OF LYNCHBURG.

LEAD PAINT DISCLOSURE STATEMENT:

A LEAD-BASED PAINT INSPECTION WAS NOT PERFORMED. THE CONTRACTOR SHALL NOTIFY THE CITY'S PROJECT MANAGER OF ANY SUSPECTED MATERIALS FOR REMOVAL BY THE CITY OF LYNCHBURG.

SUGGESTED CONSTRUCTION SEQUENCE:

NOTE: THE FOLLOWING IS ONE POTENTIAL SEQUENCE OF CONSTRUCTION.

1. PROVIDE CONCRETE PADS AND GENERATORS AND COMPLETE EXTERIOR SITE WORK.
2. PROVIDE INTERIOR RACEWAY.
3. COMMISSION GENERATORS.
4. SWITCHOVER TO NEW GENERATORS.
5. REMOVE OLD GENERATORS, FENCE, ETC.

VIRGINIA A&E, PLLC
1115 VISTA PARK DRIVE
FOREST, VA 24551
PHONE: (434) 316-6001

Virginia A&E

VAE PROJECT NO: 11075

COMMONWEALTH OF VIRGINIA
Scott Burger
SCOTT F. BURGER
Lic. No. 034338
9/2/11
PROFESSIONAL ENGINEER

Job No.: 11075

Drawing No.:

T1

ELECTRICAL LEGEND AND SYMBOLS

- [1] CONSTRUCTION NOTE
- (1) DEMOLITION NOTE
- LIMIT OF DEMOLITION
- NEW-TO-EXISTING POINT OF CONNECTION

POWER

- (E) EQUIPMENT CONNECTION
- WP DUPLEX RECEPTACLE, WALL MOUNTED 18" AFF, UON.
  WP = WEATHERPROOF WITH GROUND FAULT CIRCUIT PROTECTION
  AC = MOUNT 3" ABOVE COUNTER BACKSPLASH
  GFI = GROUND FAULT PROTECTION
- QUAD RECEPTACLE, MOUNT 18" AFF, UON.
- SIMPLEX RECEPTACLE, MOUNT 18" AFF, UON.
- SPECIAL PURPOSE RECEPTACLE, AS NOTED, WALL MOUNT 18" AFF, UON.
- SM MANUAL MOTOR STARTER WITH THERMAL OVERLOADS, WALL-MOUNT 48" AFF UON.
- 480V, 3P, 100A / 70A, NEMA 1 DISCONNECT — VOLTAGE, POLES, AMP RATING / FUSE SIZE, ENCLOSURE TYPE
- 480V, 3P, Ø / FVNR, 3R, CB MOTOR STARTER — VOLTAGE, POLES, NEMA SIZE / TYPE, ENCLOSURE, DISCONNECT
- 400A / 300A FUSED SWITCH — SWITCH SIZE / FUSE SIZE
- 400AF / 300AT CIRCUIT BREAKER — AMP FRAME / AMP TRIP
- N E TRANSFER SWITCH
- LP3, 120/208, 3P/4W, 225A, MCB — PANELBOARD — PANELBOARD NUMBER, VOLTAGE, POLES, WIRES, AMP RATING

LIGHTING

- A a 2'X4' FLUORESCENT CEILING-MOUNTED FIXTURE. UPPERCASE LETTER INDICATES FIXTURE TYPE. LOWERCASE LETTER INDICATES SWITCHING
- A a 2'X4' FLUORESCENT EMERGENCY FIXTURE. CONNECT EMERGENCY BALLAST AHEAD OF SWITCH.
- B b 1'X4' FLUORESCENT CEILING-MOUNTED FIXTURE.
- B b 1'X4' FLUORESCENT EMERGENCY FIXTURE. CONNECT EMERGENCY BALLAST AHEAD OF SWITCH.
- C c 2'X2' FLUORESCENT CEILING-MOUNTED FIXTURE.
- C c 2'X2' FLUORESCENT EMERGENCY FIXTURE. CONNECT EMERGENCY BALLAST AHEAD OF SWITCH.
- F f WALL-MOUNTED FIXTURE.
- F f WALL-MOUNTED EMERGENCY FIXTURE. CONNECT EMERGENCY BALLAST AHEAD OF SWITCH.
- E e RECESSED DOWNLIGHT.
- F f RECESSED ROUND EMERGENCY DOWNLIGHT. CONNECT EMERGENCY BALLAST AHEAD OF SWITCH.
- A HIGH-BAY LIGHT FIXTURE.
- G DUAL-HEAD WALL-MOUNTED EMERGENCY LIGHT
- D d FLUORESCENT STRIP LIGHT FIXTURE.
- S SWITCH, SINGLE POLE UON, MOUNT 48" AFF UON.
  a = LOWER CASE LETTER INDICATES SWITCHING
  3 = 3-WAY SWITCH
  4 = 4-WAY SWITCH
- SS DOUBLE SWITCH, MOUNT 48" AFF, UON.
- EX1 CEILING MOUNTED, SINGLE-FACED EXIT SIGN. ARROW INDICATES FACE CONFIGURATION.
- EX2 CEILING MOUNTED, DOUBLE-FACED EXIT SIGN. ARROW INDICATES FACE CONFIGURATION.
- EX3 WALL MOUNTED, SINGLE-FACED EXIT SIGN. ARROW INDICATES FACE CONFIGURATION.

CONDUCTORS AND RACEWAYS

- CONDUIT RUN CONCEALED UNDER FLOOR
- CONDUIT RUN EXPOSED OR ABOVE CEILING
- (3)#12 IN 3/4"C HOMERUN CIRCUIT TO OTHER CIRCUIT. CONDUCTORS AND RACEWAY SIZE AS NOTED.
- MDP-1 HOMERUN TO PANEL AND CIRCUIT NUMBER AS INDICATED. CONDUCTOR AND RACEWAY SIZE AS INDICATED IN PANELBOARD SCHEDULE, UON.
- MDP-1 INDICATES MULTIPLE HOMERUN CIRCUITS FROM SINGLE PANEL/CIRCUIT.
- JB JUNCTION BOX
- CONDUIT TURNING DOWN
- CONDUIT TURNING UP

SPECIAL SYSTEMS

- F FIRE ALARM MANUAL PULL STATION. MOUNT 48" AFF UON.
- 30 F FIRE ALARM COMBINATION HORN/STROBE. WALL-MOUNTED 80" AFF, UON. NUMBER INDICATES CANDELA RATING.
- 30 F FIRE ALARM STROBE. WALL-MOUNTED 80" AFF, UON. NUMBER INDICATES CANDELA RATING.
- FACP FIRE ALARM CONTROL PANEL
- WALL-MOUNTED, SINGLE-GANG, TELECOMMUNICATIONS OUTLET BOX. MOUNT 18" AFF UON. PROVIDE 1" CONDUIT WITH PULL STRING FROM OUTLET BOX TO ACCESSIBLE AREA ABOVE CEILING.
- S SMOKE DETECTOR
- SD SMOKE DETECTOR, DUCT MOUNTED
- PUSHBUTTON STATION. MOUNT 48" AFF, UON.
- FS SPRINKLER FLOW SWITCH
- TS TAMPER SWITCH
- S CEILING MOUNTED SPEAKER

ABBREVIATIONS

A	AMPERE	VFD	VARIABLE FREQUENCY DRIVE
AC	ABOVE COUNTER	W	WIRES
A/E	ARCHITECT/ENGINEER	W/	WITH
AF	AMP FRAME	W/O	WITHOUT
AT	AMP TRIP	WP	WEATHERPROOF
AFF	ABOVE FINISHED FLOOR	XFMR	TRANSFORMER
APPROX	APPROXIMATE		
C	CONDUIT		
CB	CIRCUIT BREAKER		
CRSI	CONCRETE REINFORCING STEEL INSTITUTE		
DWG	DRAWING		
(E)	EXISTING		
EMT	ELECTRICAL METALLIC TUBING		
FD	FUSED DISCONNECT		
FMC	FLEXIBLE METALLIC CONDUIT		
FTL	FEED THROUGH LUGS		
FVNR	FULL VOLTAGE NON REVERSING		
G, GND	GROUND		
GFI	GROUND FAULT INTERRUPTING		
HOA	HAND-OFF-AUTO		
HP	HORSEPOWER		
HVAC	HEATING, VENTILATING, AND AIR CONDITIONING		
JB	JUNCTION BOX		
KVA	KILOVOLTAMPS		
LFMC	LIQUID-TIGHT FLEXIBLE METALL CONDUIT		
MAX	MAXIMUM		
MC	METAL CLAD CABLE		
MCA	MIN CIRCUIT AMPACITY		
MCB	MAIN CIRCUIT BREAKER		
MIN	MINIMUM		
MLO	MAIN LUGS ONLY		
MOPD	MAX OVERCURRENT PROTECTION DEVICE		
N	NEUTRAL		
NF	NON FUSED		
NIC	NOT IN CONTRACT		
OCPD	OVERCURRENT PROTECTION DEVICE		
P	PHASES OR POLES		
PB	PUSHBUTTON		
RNC	RIGID NONMETALLIC CONDUIT		
RSC	RIGID STEEL CONDUIT		
STP	SHIELDED TWISTED PAIR		
TVSS	TRANSIENT VOLTAGE SURGE SUPPRESSION		
TYP	TYPICAL		
UG	UNDERGROUND		
UON	UNLESS OTHERWISE NOTED		
UTP	UNSHIELDED TWISTED PAIR		
V	VOLTS		

1. THESE DRAWINGS ARE SCHEMATIC IN NATURE AND INDICATE THE GENERAL AND APPROXIMATE LOCATION OF EQUIPMENT AND EXISTING CONSTRUCTION. FIELD-VERIFY ALL DIMENSIONS AND LOCATIONS. INDICATED UNDERGROUND OBSTRUCTIONS WERE DEVELOPED FROM EXISTING RECORDS AND ABOVE GROUND INSPECTION. ACCURACY OR COMPLETENESS OF LOCATION AND DEPTH OF UNDERGROUND UTILITIES AND STRUCTURES CANNOT BE GUARANTEED. VERIFY LOCATION AND DEPTH OF ALL UNDERGROUND FACILITIES BEFORE STARTING WORK.
2. ALL ELECTRICAL WORK ON THIS PROJECT SHALL BE INSTALLED IN ACCORDANCE WITH THE 2009 VIRGINIA UNIFORM STATEWIDE BUILDING CODE, NFPA 70-2008 (NATIONAL ELECTRICAL CODE). AND REFERENCED CODES.
3. COORDINATE ARRANGEMENT, MOUNTING, AND SUPPORT OF ELECTRICAL EQUIPMENT TO AVOID INTERFERENCES WITH ELECTRICAL AND OTHER TRADES. COORDINATE WORK WITH EXISTING CONDITIONS INCLUDING BEAMS, COLUMNS, SITE FEATURES, AN OTHER CONSTRUCTION WHETHER OR NOT SUCH IS SHOWN ON THE DRAWINGS. SET SLEEVES IN CAST-IN-PLACE CONCRETE AND MASONRY WALLS, AS THEY ARE CONSTRUCTED. COORDINATE LOCATION OF ACCESS PANELS AND DOORS FOR ELECTRICAL EQUIPMENT THAT ARE BEHIND FINISHED SURFACES OR ARE OTHERWISE CONCEALED. COORDINATE AMPACITY VOLTAGE, PHASING, OVERCURRENT PROTECTION, LOCAL DISCONNECT REQUIREMENTS WITH ACTUAL EQUIPMENT PROVIDED.
4. PROVIDE PRODUCT DATA SUBMITTALS FOR THE FOLLOWING EQUIPMENT IF SUPPLIED AS PART OF THIS PROJECT: ENCLOSED SWITCHES, LUMINAIRES, AND DEVICES. MATERIAL INSTALLED PRIOR TO OBTAINING AN APPROVED SUBMITTAL ARE AT CONTRACTOR'S RISK.
5. CUT EXISTING CONSTRUCTION AS NEEDED FOR DEMOLITION AND CONSTRUCTION. USE CUTTING METHODS THAT MINIMIZE DAMAGE TO FINISHED AND ADJACENT SURFACES. PATCH EXISTING AND NEW CONSTRUCTION AND REPAIR ALL DAMAGED SURFACES TO MATCH EXISTING. PATCH UNUSED AND ABANDONED PENETRATIONS.

SPECIFICATIONS:

RACEWAYS AND BOXES

A. MATERIALS
EMT – ANSI C80.3, COMPRESSION FITTING, MIN SIZE 3/4"
RSC – ANSI C80.1, MIN SIZE 3/4"
LFMC – MIN SIZE 3/4"
RNC – NEMA TC2 WITH TC3 FITTINGS, MIN SIZE 3/4" (2" WHEN UNDERGROUND)
WIREWAYS – SHEET METAL WITH SCREW COVERS

B. INDOOR RACEWAY APPLICATIONS
EXPOSED OR CONCEALED: EMT, UON.
EMBEDDED IN CONCRETE: SCHEDULE 40 RNC
BOXES AND ENCLOSURES: NEMA 250 TYPE 1, UON

C. OUTDOOR RACEWAY APPLICATIONS
ABOVEGROUND: RSC
BOXES AND ENCLOSURES: NEMA 250 TYPE 3R, UON

D. UNDERGROUND RACEWAY APPLICATIONS
USE DIRECT BURIED SCHEDULE 80 RNC. MINIMUM DEPTH IS 24" OR GREATER AS REQUIRED BY NATIONAL ELECTRICAL CODE. USE FABRICATED LONG RADIUS PVC-COATED RSC ELBOWS FOR TURNS APPROACHING 90 DEGREES. TRANSITION TO PVC COATED RSC BEFORE TURNING UP TO COME OUT OF GROUND.

E. LEAVE 1" MINIMUM CONCRETE COVER FOR EMBEDDED RACEWAY. USE MANUFACTURED RSC ELBOW TO TURN OUT OF CONCRETE.

F. PROVIDE 65-LB TEST PULL STRING TIED OFF AT EACH END IN ALL EMPTY CONDUITS.

WIRING METHODS

A. SINGLE CONDUCTORS SHALL BE COPPER, #12 MINIMUM CONDUCTOR SIZE, SOLID FOR #10 AWG AND SMALLER, STRANDED FOR #8 AWG AND LARGER. FOR ABOVE-GROUND APPLICATIONS USE THHN-THWN, 600VAC INSULATION. FOR CIRCUITS WHERE ANY PART OF THE CIRCUIT IS BELOW GRADE USE CONDUCTORS WITH XHHW-2, 600 VAC RATED INSULATION.

B. INSTALL RACEWAYS AND CABLES CONCEALED WITHIN FINISHED WALLS, CEILINGS, AND FLOORS, UON.

C. RACEWAY APPLICATIONS:
SERVICE CONDUCTORS: SINGLE CONDUCTORS IN RACEWAY, UON
FEEDER CONDUCTORS: SINGLE CONDUCTORS IN RACEWAY, UON
BRANCH CIRCUITS: SINGLE CONDUCTORS IN RACEWAY, UON
CLASS 2 CONTROL CIRCUITS: SINGLE CONDUCTORS IN RACEWAY, UON.

D. MINIMIZE SPLICES AND PLACE ONLY IN ACCESSIBLE JUNCTION BOXES AND ENCLOSURES THAT ARE SIZED AND RATED FOR SUCH.

ELECTRICAL IDENTIFICATION:

A. EQUIPMENT IDENTIFICATION: PROVIDE LABELS FOR ELECTRICAL CABINETS, DISCONNECT SWITCHES, ENCLOSED CIRCUIT BREAKERS, PUSH-BUTTON STATIONS, POWER TRANSFER EQUIPMENT, AND AS ADDITIONALLY INDICATED. LABELS SHALL BE LAMINATED ACRYLIC, WITH 1/2-INCH ENGRAVED BLACK LETTERING ON 1-1/2" WHITE STOCK ATTACHED WITH SCREWS.

B. DEVICE CIRCUIT IDENTIFICATION: PROVIDE SELF-ADHESIVE 1/4" HEIGHT CLEAR LABELS WITH 1/8" BLACK PRINTED TEXT WITH EACH RECEPTACLE INDICATING PANELBOARD AND BRANCH CIRCUIT.

C. RACEWAY AND CABLE LABELS: PROVIDE PRE-TENSIONED, PRE-PRINTED, WRAPAROUND PLASTIC SLEEVES THAT ARE SIZED TO SUIT THE DIAMETER OF THE ITEM IDENTIFIED.

D. USE VINYL OR VINYL-CLOTH, SELF-ADHESIVE, WRAPAROUND TYPE TAPE MARKERS FOR WIRE. USE GREEN FOR GROUNDING CONDUCTOR ONLY. FOLLOW THESE WIRE COLOR CODING CONVENTIONS:
120 SINGLE PHASE: BLACK, WHITE, AND GREEN
120/208 THREE PHASE: RED, BLACK, AND BLUE

PENETRATIONS AND SLEEVES:

A. MASONRY WALLS: IN CONCRETE SLABS, INSTALL SLEEVES FOR PENETRATIONS UNLESS CORE-DRILLED HOLES OR FORMED OPENINGS ARE USED. SELECT SLEEVE SIZE TO ALLOW FOR 1/2-INCH ANNULAR CLEAR SPACE BETWEEN RACEWAY AND SLEEVES.

B. ABOVE-GRADE EXTERIOR WALL PENETRATIONS: SEAL PENETRATIONS USING SLEEVES AND CAULK, UON.

SUPPORT AND ANCHORAGE

A. PROVIDE SUPPORT AND ANCHORAGE THAT ARE ADEQUATE IN TENSION, SHEAR, AND PULLOUT FORCE TO RESIST MAXIMUM LOADS CALCULATED OR IMPOSED WITH A MINIMUM STRUCTURAL SAFETY FACTOR OF FIVE.

B. STEEL SLOTTED SUPPORT SYSTEMS: COMPLY WITH MFMA-3 FACTORY FABRICATED COMPONENTS FOR FIELD ASSEMBLY WITH FINISH SUITABLE FOR THE ENVIRONMENT.

C. FOR ATTACHMENT TO CONCRETE AND SOLID MASONRY, USE WEDGE-TYPE, ZINC-COATED STEEL EXPANSION ANCHOR FASTENERS. DRILL HOLES AT LOCATIONS AND DEPTHS THAT AVOID REINFORCING BARS. FOR CONNECTIONS TO HOLLOW MASONRY USE ALL-STEEL SPRINGHEAD TYPE TOGGLE BOLTS.

D. FOR CLAMPING TO STEEL STRUCTURAL ELEMENTS USE WELDED STEEL STUDS, BEAM CLAMPS OR SPRING-TENSION CLAMPS.

E. HANGER RODS TO BE THREADED STEEL.

F. FOR CONNECTIONS TO LIGHT STEEL USE SHEET METAL SCREWS.

G. FOR ITEMS MOUNTED ON HOLLOW WALLS AND NONSTRUCTURAL BUILDING SURFACES USE SLOTTED-CHANNEL RACKS ATTACHED TO SUBSTRATE.

H. FASTEN HANGERS AND SUPPORTS SECURELY IN PLACE WITH PROVISIONS FOR STRUCTURAL AND THERMAL MOVEMENT.

I. SEPARATE DISSIMILAR METALS AND METAL PRODUCTS FROM CONTACT WITH WOOD OR CEMENTITIOUS MATERIALS BY PAINTING EACH METAL SURFACE IN AREA OF CONTACT WITH A BITUMINOUS COATING OR BY OTHER PERMANENT SEPARATION.

J. EMT AND RSC MAY BE SUPPORTED BY OPENINGS THROUGH STRUCTURAL MEMBERS AS PERMITTED IN NFPA-70.

DEVICES:

A. GFCI RECEPTACLES: STRAIGHT BLADE, FEED-THROUGH TYPE. COMPLY WITH NEMA WD 1, NEMA WD 6, UL 498, AND UL 943, CLASS A, 125 V, 20 A, AND INCLUDE INDICATOR LIGHT THAT IS LIGHTED WHEN DEVICE IS TRIPPED.

B. WALL COVER PLATES: FOR WET OR DAMP LOCATIONS PROVIDE THERMOPLASTIC "WEATHERPROOF WHILE IN USE" LOCKABLE COVER

PANELBOARDS:

A. MODIFIED PANELBOARDS: PROVIDE OR RELOCATE BREAKERS AS INDICATED. NEW BREAKERS SHALL BE FROM SAME MANUFACTURER AS PANELBOARD AND SHALL HAVE SUITABLE FAULT CURRENT RATINGS.

B. PROVIDE TYPED PANELBOARD INDEXES FOR ALL NEW AND MODIFIED PANELBOARDS.

GROUNDING

A. PROVIDE GROUNDING IN ACCORDANCE WITH NATIONAL ELECTRICAL CODE AND ADDITIONALLY AS INDICATED.

B. PROVIDE TWO OR MORE 10' X 3/4" COPPER CLAD GROUND RODS AS INDICATED. PLACE RODS AS INDICATED AND NO LESS THAN 36" FROM BUILDING. CONNECT GROUND RODS TO BUILDING GROUND SYSTEM AS INDICATED. BURIED UNDERGROUND CONNECTIONS TO GROUND RODS SHALL USE EXOTHERMICALLY WELDED CONNECTIONS. ACCESSIBLE GROUND ROD CONNECTIONS SHALL USE CLAMPS. USE EXOTHERMIC CONNECTIONS FOR ALL BURIED UNDERGROUND SPLICES.

NO.	BY	REVISIONS	DATE

COMMONWEALTH OF VIRGINIA
Scott Burger
SCOTT F. BURGER
Lic. No. 034338
9/2/11
PROFESSIONAL ENGINEER

VIRGINIA A&E, PLLC
1115 VISTA PARK DRIVE
FOREST, VIRGINIA 24551
PHONE: (434) 316-6001

Virginia A&E

CITY OF LYNCHBURG
INFORMATION TECHNOLOGY DEPARTMENT
GENERATOR UPGRADE

CLIENT PROJECT CODE:

LYNCHBURG, VIRGINIA

LEGEND, ABBREVIATIONS, AND NOTES

PROJECT NO: 11075
DATE: 02 SEP 11

Full Scale Verification
0" 1"

Drawing No.: E1

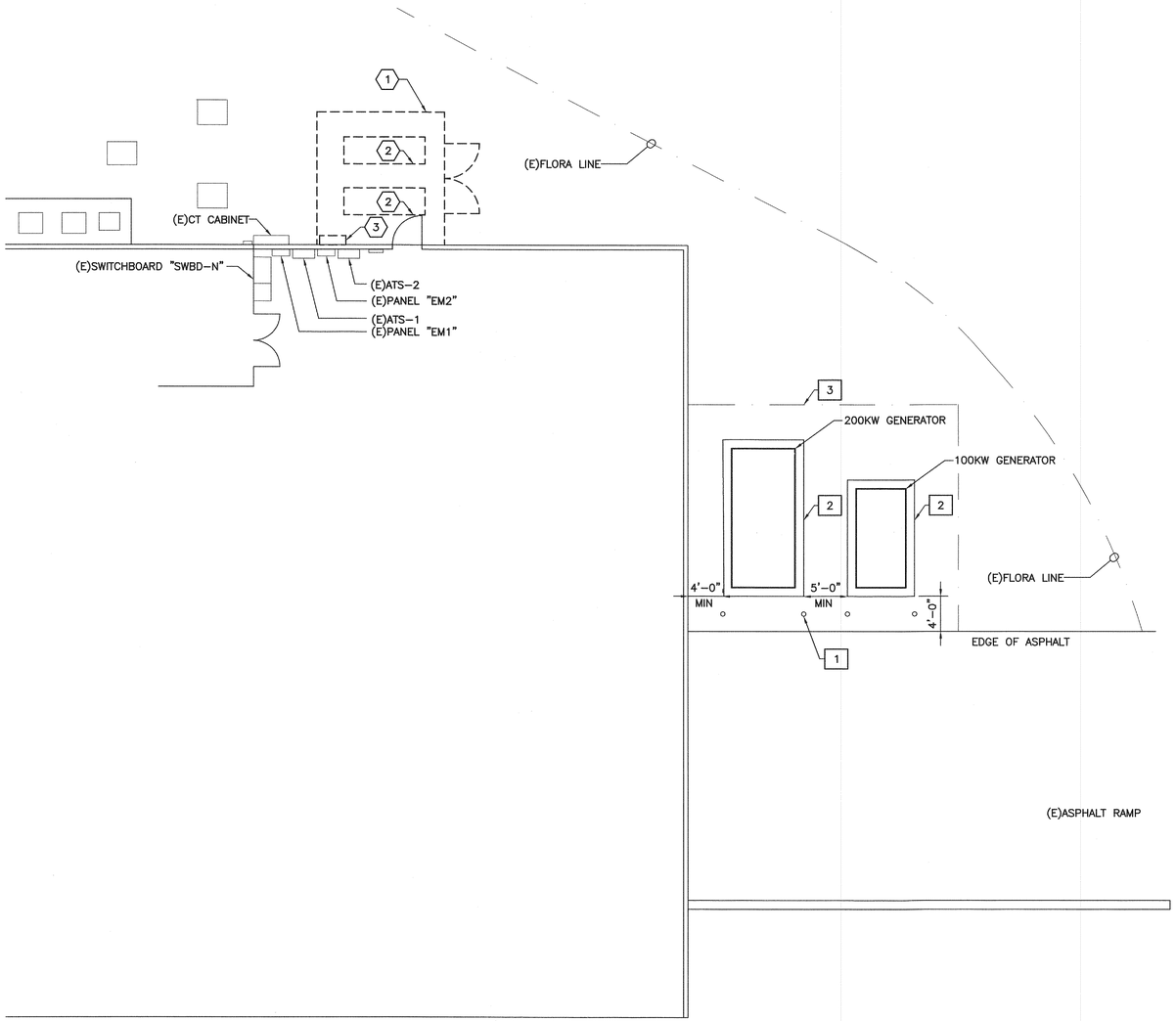

PARTIAL ELECTRICAL PLAN
SCALE: 1/8"=1'-0"

(XX) DEMOLITION NOTES:

1. REMOVE CHAIN LINK FENCE ENCLOSURE IN ITS ENTIRETY. CONCRETE PAD SHALL REMAIN IN PLACE.
2. NEW GENERATORS NEED TO BE COMMISSIONED BEFORE (E)GENERATORS ARE REMOVED. REMOVE GENERATOR AND ALL ASSOCIATED CONDUCTORS. (E)CIRCUIT BREAKERS ASSOCIATED FOR BATTERY CHARGERS AND BLOCK HEATERS SHALL BE MARKED AS SPARE. DISCONNECT NATURAL GAS AT SOURCE. TURN GENERATORS OVER TO OWNER. DISCONNECT (E)COUNTERPOISE CONDUCTOR IN SWBD-N AFTER NEW COUNTERPOISE AND GENERATORS ARE OPERATIONAL.
3. REMOVE GENERATOR SPLICE BOX AND ALL ASSOCIATED CONDUCTORS BACK TO SOURCE. PATCH HOLES IN WALL. PAINT TO MATCH ADJACENT SURFACES.

[XX] CONSTRUCTION NOTES:

1. SEE BOLLARD DETAIL DRAWING E6. TYPICAL OF FOUR.
2. CUT AND REMOVE SOIL AS REQUIRED TO MAINTAIN EXISTING GRADE.
3. KILL GRASS AND PROVIDE 4" GRAVEL.

1/8"=1'-0" 0 5' 10' 15' 20'

NO.	BY	REVISIONS	DATE

COMMONWEALTH OF VIRGINIA
SCOTT F. BURGER
Lic. No. 034338
9/2/11
PROFESSIONAL ENGINEER

VIRGINIA A&E, PLLC
1115 VISTA PARK DRIVE
FOREST, VIRGINIA 24551
PHONE: (434) 316-6001

Virginia A&E

CITY OF LYNCHBURG
INFORMATION TECHNOLOGY DEPARTMENT
GENERATOR UPGRADE

CLIENT PROJECT CODE:

LYNCHBURG, VIRGINIA

PARTIAL ELECTRICAL PLAN

PROJECT NO: 11075
DATE: 02 SEP 11

Full Scale Verification
0" 1"

Drawing No.:
E2

(XX) DEMOLITION NOTES:

1. REMOVE GENERATOR AND ALL ASSOCIATED CONDUCTORS. CONTRACTOR SHALL BE RESPONSIBLE FOR DISPOSAL OF OLD GENERATORS. CAP ABANDONED CONDUIT.
2. REMOVE NORMAL POWER FEEDER FROM (E)SWBD–N TO ATS–1. MARK BREAKER AS SPARE.
3. REMOVE SPLICE BOX.

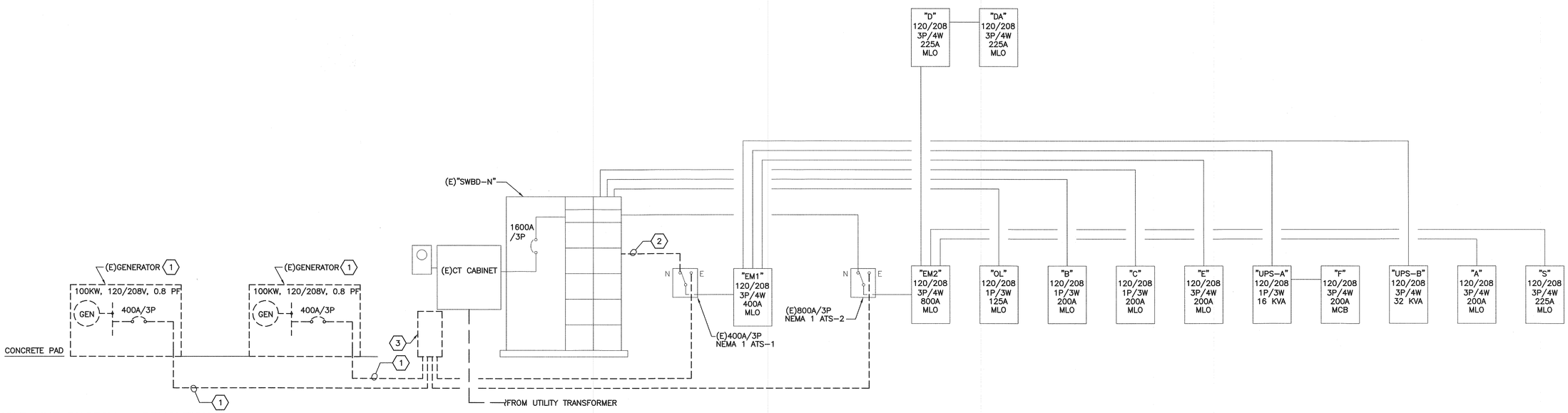

SINGLE LINE DIAGRAM – DEMOLITION

SCALE: NONE

NO.	BY	REVISIONS	DATE

COMMONWEALTH OF VIRGINIA
SCOTT F. BURGER
Lic. No. 034338
9/2/11
PROFESSIONAL ENGINEER

VIRGINIA A&E, PLLC
1115 VISTA PARK DRIVE
FOREST, VIRGINIA 24551
PHONE: (434) 316-6001

Virginia A&E

CITY OF LYNCHBURG
INFORMATION TECHNOLOGY DEPARTMENT
GENERATOR UPGRADE

CLIENT PROJECT CODE:

LYNCHBURG, VIRGINIA

SINGLE LINE DIAGRAM – DEMOLITION

PROJECT NO: 11075

DATE: 02 SEP 11

Full Scale Verification
0" 1"

Drawing No.:

E3

XX CONSTRUCTION NOTES:

1. PROVIDE 400A/3P BREAKER IN (E)PANEL "EM–2".
2. EXTEND (4)500KCMIL IN (E)12"x12" TROUGH TO (E)ATS–1.
3. EXTEND (4)500KCMIL AND (1)#3 EGC., IN 4" CONDUIT.
4. EXTEND (2)SETS, EACH (4)500KCMIL AND (1)#1/0 EGC., IN 4" CONDUIT.
5. EXTEND (3)#10, 3/4" CONDUIT TO IN (E)PANEL "EM–1" FOR BATTERY CHARGER. EXTEND (4)#10 IN SAME CONDUIT FOR BLOCK HEATER.
6. EXTEND (6)#12 IN 3/4" CONDUIT FOR CONTROL WIRING.
7. EXTEND (5)#10, 3/4" CONDUIT TO IN (E)PANEL "EM–1" FOR BATTERY CHARGER AND BLOCK HEATER.
8. PROVIDE (2)20A/1P BREAKERS FOR BATTERY CHARGER AND BLOCK HEATER FOR 100KW GENERATOR. PROVIDE (1)20A/1P AND (1)30A/2P BREAKER FOR BATTERY CHARGER AND BLOCK HEATER FOR 200KW GENERATOR.
9. PROVIDE 3/4" CONDUIT FOR E–STOP AND ANNUNCIATOR. PROVIDE WIRE PER GENERATOR MANUFACTURERS REQUIREMENTS.
10. ADJUST TRANSFER SWITCH SO THAT UPON LOSS OF POWER, GENERATOR STARTS IMMEDIATELY. ADJUST TIMER SO THAT TRANSFER SWITCH DOES NOT TRANSFER TO EMERGENCY POWER UNLESS NORMAL POWER DOES NOT COME BACK WITHIN 30 SECONDS.

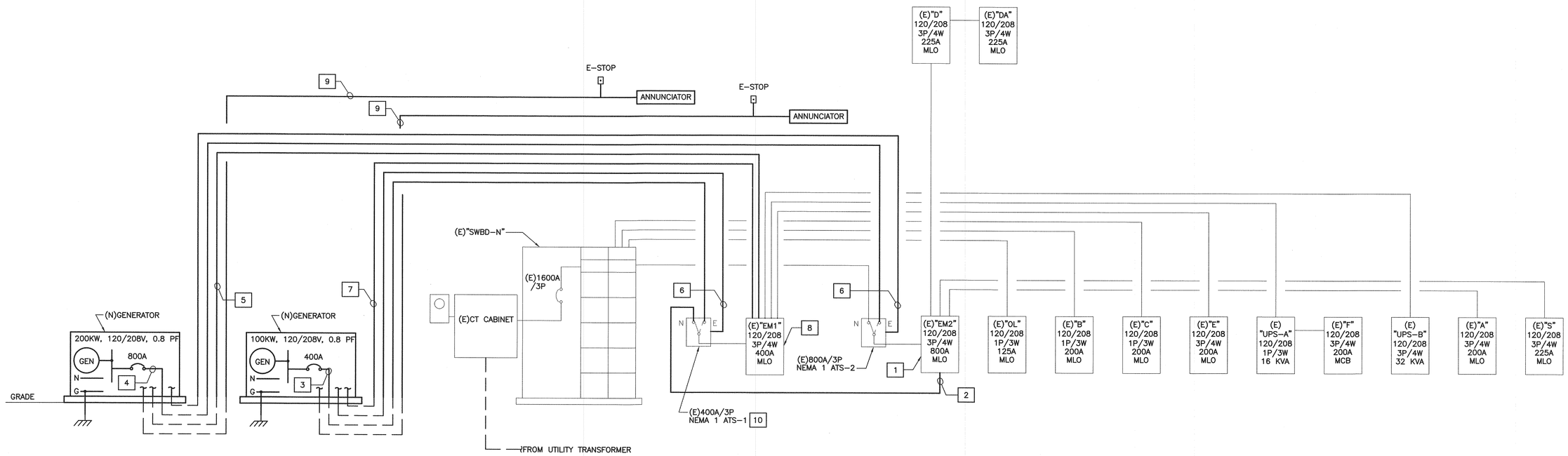

SINGLE LINE DIAGRAM – NEW WORK
SCALE: NONE

NO.	BY	REVISIONS	DATE

COMMONWEALTH OF VIRGINIA
Scott Burger
SCOTT F. BURGER
Lic. No. 034338
9/2/11
PROFESSIONAL ENGINEER

VIRGINIA A&E, PLLC
1115 VISTA PARK DRIVE
FOREST, VIRGINIA 24551
PHONE: (434) 316-6001

Virginia A&E

CITY OF LYNCHBURG
INFORMATION TECHNOLOGY DEPARTMENT
GENERATOR UPGRADE

CLIENT PROJECT CODE:

LYNCHBURG, VIRGINIA

SINGLE LINE DIAGRAM – NEW WORK

PROJECT NO: 11075
DATE: 02 SEP 11

Full Scale Verification
0" 1"

Drawing No.: E4

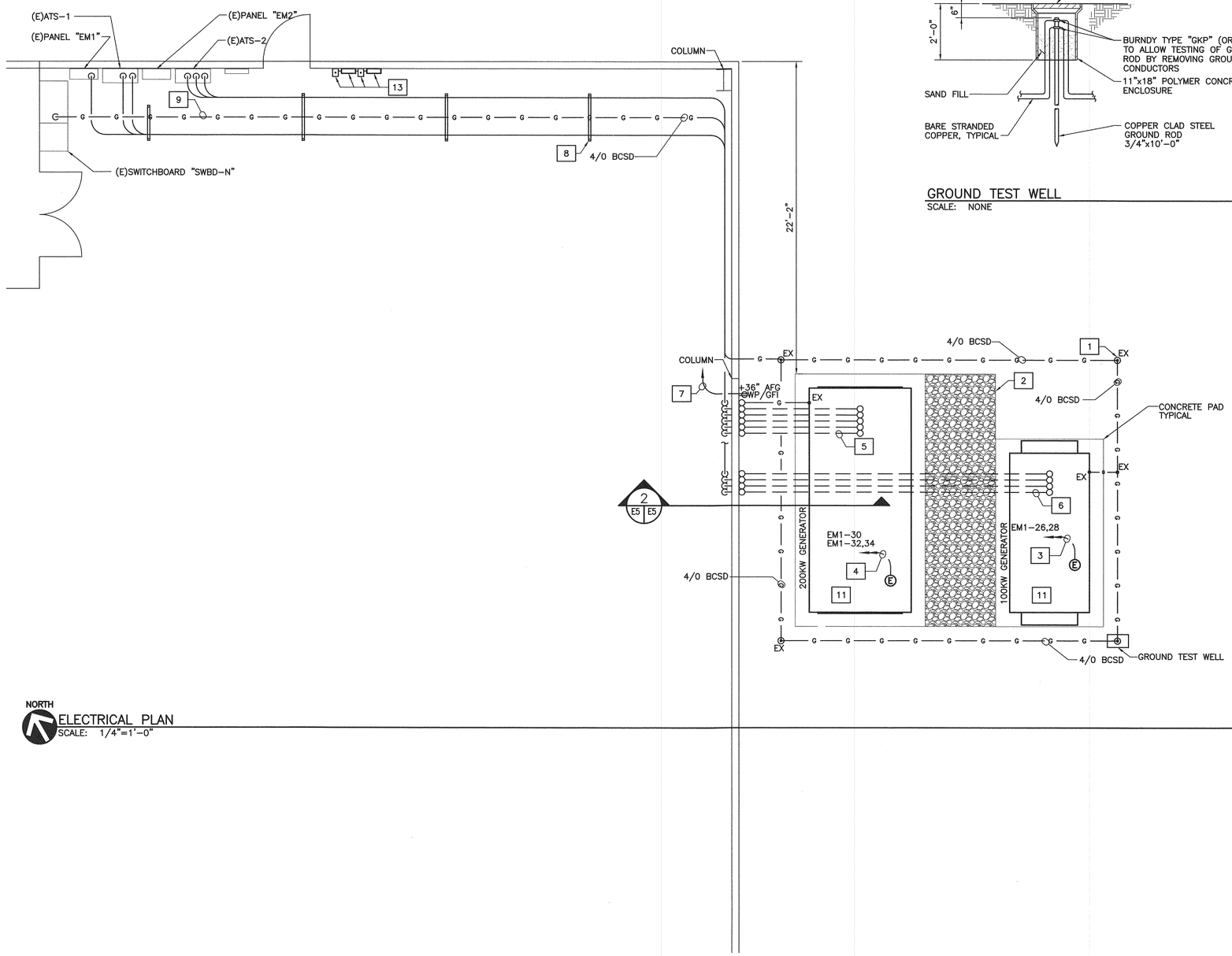

ELECTRICAL PLAN
SCALE: 1/4"=1'-0"

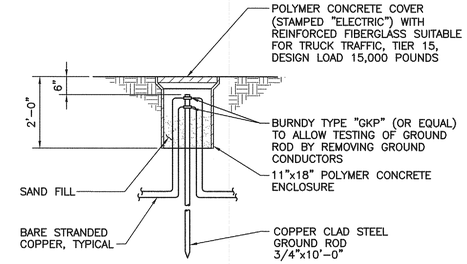

GROUND TEST WELL
SCALE: NONE

DRAWING NOTES:

1. MINIMUM SIZE UNDERGROUND PVC CONDUIT IS 2".

XX CONSTRUCTION NOTES:

1. "EX" DENOTES EXOTHERMIC WELD. SEE DRAWING E6.
2. PROVIDE SIX INCHES OF 21A GRAVEL IN AREA SHOWN.
3. EXTEND (5)#10, 3/4" CONDUIT TO 20A/1P BREAKERS IN (E)PANEL "EM-1" FOR BATTERY CHARGER AND BLOCK HEATER.
4. EXTEND (3)#10, 3/4" CONDUIT TO 20A/1P BREAKER IN (E)PANEL "EM-1" FOR BATTERY CHARGER. PROVIDE 30A/2P BREAKER IN PANEL "EM-1". EXTEND (4)#10, 3/4" CONDUIT TO (E)PANEL "EM-1" FOR BLOCK HEATER.
5. EXTEND CABLE IN 3/4" CONDUIT TO ATS-1 FOR START SIGNAL.
6. EXTEND CABLE IN 3/4" CONDUIT TO ATS-2 FOR START SIGNAL.
7. PROVIDE 20A/1P BREAKER IN (E)PANEL "EM-1". EXTEND (3)#12 IN 3/4" CONDUIT.
8. SUPPORT CONDUIT RUNS WITH STRUT AND 1/2" ALL-THREAD. CLAMP ALL-THREAD TO ROOF SUPPORTING STRUCTURE.
9. ROUTE BCSD CABLE IN 1" PVC CONDUIT STARTING 12" BELOW GRADE AT BUILDING WALL.
10. NOT USED.
11. ANCHOR GENERATOR PER MANUFACTURERS' RECOMMENDATIONS.
12. NOT USED.
13. MOUNT REMOTE ANNUNCIATORS AND E-STOP PUSHBUTTONS AT +48" AFF. EXTEND 3/4" CONDUIT TO EACH GENERATOR.

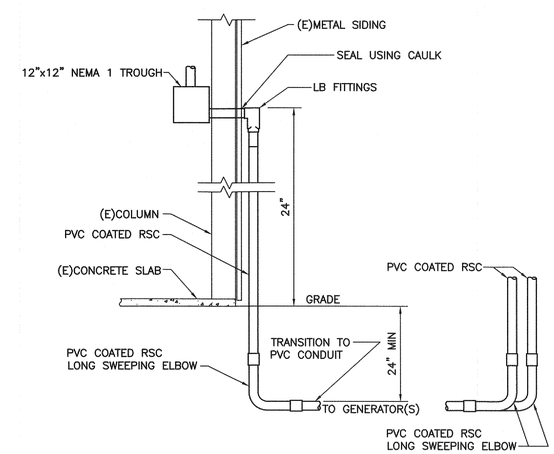

2 E5 E5 SECTION @ WALL PENETRATION
SCALE: NONE

1/4"=1'-0" 0 1' 5' 10'

NO.	BY	REVISIONS	DATE

COMMONWEALTH OF VIRGINIA
Scott Burger
SCOTT F. BURGER
Lic. No. 034338
9/2/11
PROFESSIONAL ENGINEER

VIRGINIA A&E, PLLC
1115 VISTA PARK DRIVE
FOREST, VIRGINIA 24551
PHONE: (434) 316-6001

Virginia A&E

CITY OF LYNCHBURG
INFORMATION TECHNOLOGY DEPARTMENT
GENERATOR UPGRADE

CLIENT PROJECT CODE:

LYNCHBURG, VIRGINIA

ELECTRICAL PLAN

PROJECT NO: 11075
DATE: 02 SEP 11

Full Scale Verification
0" 1"

Drawing No.: E5

CONCRETE AND REINFORCEMENT NOTES:

1. GENERATOR PAD SOIL BEARING CAPACITY SHALL BE A MINIMUM 1,500 PSF. CONTRACTOR SHALL ENGAGE INSPECTOR TO VERIFY SOIL BEARING CAPACITY AND REINFORCEMENT PLACEMENT PRIOR TO CONCRETE PLACEMENT. SUBMIT INSPECTION REPORT TO A/E FOR REVIEW.
2. CONCRETE SHALL BE NORMAL WEIGHT 145 PCF WITH A MINIMUM COMPRESSIVE STRENGTH OF 4,000 PSI AT 28 DAYS.
3. REINFORCING BARS SHALL BE ROLLED FROM NEW BILLET STEEL CONFORMING WITH ASTM A615/A615M, GRADE 60, UNLESS OTHERWISE NOTED.
4. THE FOLLOWING MINIMUM CONCRETE COVER SHALL BE PROVIDED FOR ALL REINFORCEMENT, UNLESS OTHERWISE NOTED:
   A. CONCRETE CAST AGAINST AND PERMANENTLY EXPOSED TO EARTH — 3"
   B. CONCRETE EXPOSED TO EARTH OR WEATHER: #5 BAR AND SMALLER — 1 1/2"
5. LAP ALL REINFORCING SPLICES AT LEAST 48 BAR DIAMETERS (24" MINIMUM) UNLESS OTHERWISE NOTED.
6. ALL REINFORCING SHALL BE SECURELY WIRED TOGETHER IN FORMS AS CALLED FOR IN "PLACING REINFORCING BARS" BY CRSI.
7. STONE BASE SHALL BE 4" THICK, #57 STONE.

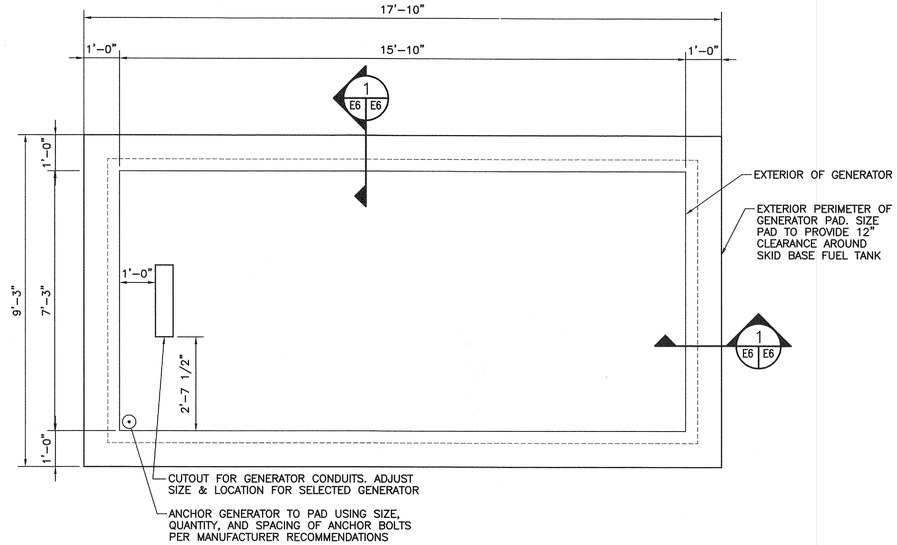

A E6 E6 200KW GENERATOR PAD ENLARGED PLAN
SCALE: 1/2"=1'-0"

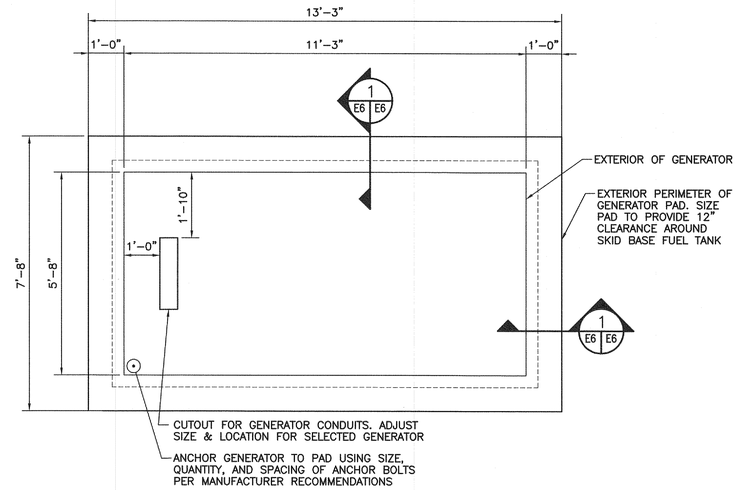

B E6 E6 100KW GENERATOR PAD ENLARGED PLAN
SCALE: 1/2"=1'-0"

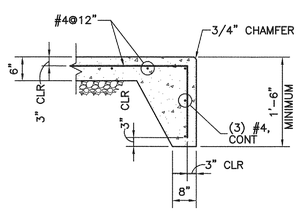

1 E6 E6 EQUIPMENT PAD SECTION
SCALE: NONE

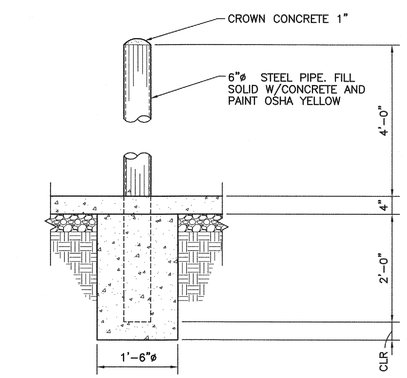

C E6 E6 BOLLARD DETAIL
SCALE: 3/4"=1'-0"

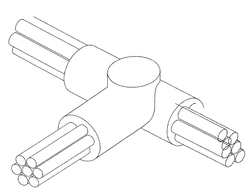

DETAIL – EXOTHERMIC CONNECTION WIRE TO WIRE
SCALE: NONE

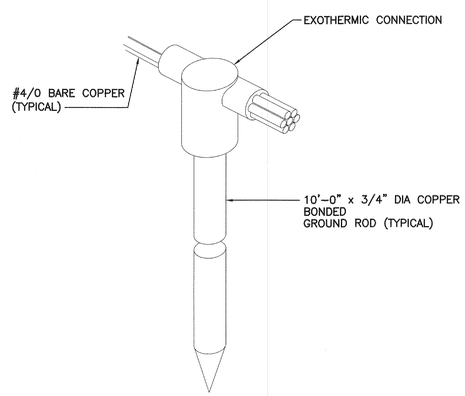

DETAIL – EXOTHERMIC CONNECTION WIRE TO GROUND ROD
SCALE: NONE

1/4"=1'-0" 0 1' 5' 10'

NO.	BY	REVISIONS	DATE

COMMONWEALTH OF VIRGINIA — Scott Burger — SCOTT F. BURGER — Lic. No. 034338 — 9/2/11 — PROFESSIONAL ENGINEER

VIRGINIA A&E, PLLC
1115 VISTA PARK DRIVE
FOREST, VIRGINIA 24551
PHONE: (434) 316-6001

Virginia A&E

CITY OF LYNCHBURG
INFORMATION TECHNOLOGY DEPARTMENT
GENERATOR UPGRADE

CLIENT PROJECT CODE:

LYNCHBURG, VIRGINIA

DETAILS

PROJECT NO: 11075
DATE: 02 SEP 11

Full Scale Verification
0" 1"

Drawing No.: E6

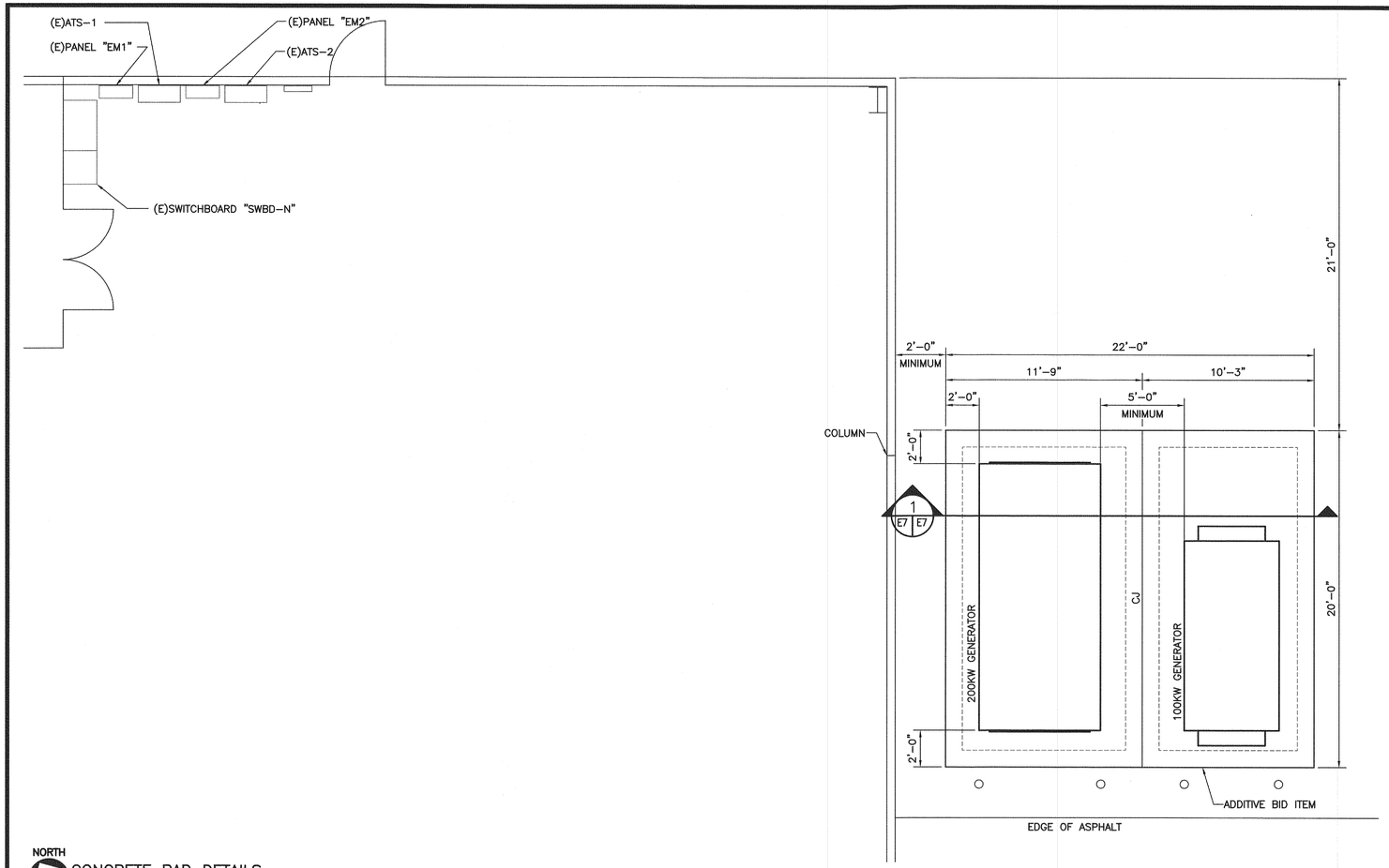

NORTH

CONCRETE PAD DETAILS
SCALE: 1/4"=1'-0"

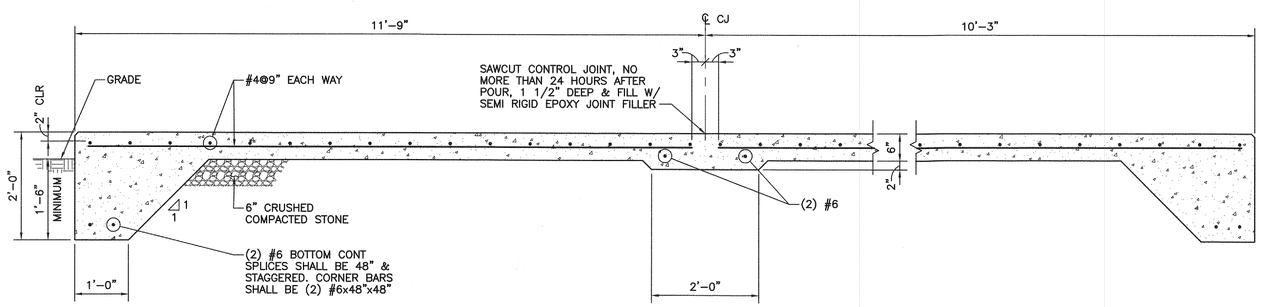

1 E7 E7 SECTION
SCALE: 1/8"=1'-0"

CONCRETE AND REINFORCEMENT NOTES:

1. GENERATOR PAD SOIL BEARING CAPACITY SHALL BE A MINIMUM 1,500 PSF. CONTRACTOR SHALL ENGAGE INSPECTOR TO VERIFY SOIL BEARING CAPACITY AND REINFORCEMENT PLACEMENT PRIOR TO CONCRETE PLACEMENT. SUBMIT INSPECTION REPORT TO A/E FOR REVIEW.
2. CONCRETE SHALL BE NORMAL WEIGHT 145 PCF WITH A MINIMUM COMPRESSIVE STRENGTH OF 4,000 PSI AT 28 DAYS.
3. CONCRETE MIXTURES SHALL COMPLY WITH ACI 301. PREPARE NORMAL-WEIGHT CONCRETE (145 PCF) DESIGN MIXES, PROPORTIONED ACCORDING TO ACI 301, AS FOLLOWS:
   A. MINIMUM COMPRESSIVE STRENGTH: 4000 PSI (27.6 MPA) AT 28 DAYS.
   B. MAXIMUM WATER-CEMENTITIOUS MATERIALS RATIO: 0.45
   C. SLUMP LIMIT: 5 INCHES (125 MM) FOR CONCRETE WITH VERIFIED SLUMP OF 2 TO 4 INCHES (50 TO 100 MM)
   D. AIR CONTENT: MAINTAIN 6% (+/- 1%)
4. THE FOLLOWING MINIMUM CONCRETE COVER SHALL BE PROVIDED FOR ALL REINFORCEMENT, UNLESS OTHERWISE NOTED:
   A. CONCRETE CAST AGAINST AND PERMANENTLY EXPOSED TO EARTH — 3"
   B. CONCRETE EXPOSED TO EARTH OR WEATHER: #5 BAR AND SMALLER — 1 1/2"
5. LAP ALL REINFORCING SPLICES AT LEAST 48 BAR DIAMETERS (24" MINIMUM) UNLESS OTHERWISE NOTED.
6. ALL REINFORCING SHALL BE SECURELY WIRED TOGETHER IN FORMS AS CALLED FOR IN "PLACING REINFORCING BARS" BY CRSI.
7. STONE BASE SHALL BE 4" THICK, #57 STONE.

1/8"=1'-0" 0 5' 10' 15' 20'
1/4"=1'-0" 0 1' 5' 10'

NO.	BY	REVISIONS	DATE

COMMONWEALTH OF VIRGINIA
Scott Burger
SCOTT F. BURGER
Lic. No. 034338
9/2/11
PROFESSIONAL ENGINEER

VIRGINIA A&E, PLLC
1115 VISTA PARK DRIVE
FOREST, VIRGINIA 24551
PHONE: (434) 316-6001

Virginia A&E

CITY OF LYNCHBURG
INFORMATION TECHNOLOGY DEPARTMENT
GENERATOR UPGRADE

CLIENT PROJECT CODE:

LYNCHBURG, VIRGINIA

CONCRETE PAD DETAILS
ADDITIVE BID ITEM #1

PROJECT NO: 11075
DATE: 02 SEP 11

Full Scale Verification
0" 1"

Drawing No.:
E7

INTERNET APPLIANCE SPECIFICATIONS:

1. PROVIDE SNMP INTERNET APPLIANCE WITHIN 24"x24" FIBERGLASS ENCLOSURE. PROVIDE ONE PER GENERATOR. MOUNT ON WALL ABOVE REMOTE GENERATOR ANNUNCIATOR.
2. INTERNET SNMP APPLIANCE ENCLOSURE TO INCLUDE TERMINAL STRIPS, INTERNET APPLIANCE, BATTERY CHARGER, AND BATTERY AS INDICATED.
3. INTERNET APPLIANCE TO INCLUDE 12 OPTICALLY ISOLATED DIGITAL INPUTS, 4 ANALOG INPUTS, AND 2 RELAY CONTROL OUTPUTS MINIMUM.
4. INTERNET APPLIANCE TO SUPPORT THESE SNMP APPLICATIONS: HP OPENVIEW, IBM TIVOLI/NETCOOL, NETIQ, NTSCOUT, SNMPC, UNICENTER, AND WHATSUP GOLD.
5. INTERNET APPLIANCE TO SUPPORT THESE PROTOCOLS: ETHERNET, IP, EUP, TCP, NTP, PPP, DNS, ICMP, AND SNMPV1.
6. INTERNET APPLIANCE TO INCLUDE THESE NETWORK INTERFACES: RJ45 10BASE-T ETHERNET AND PPP OVER RS232DTE.
7. INTERNET APPLIANCE TO INCLUDE THESE SERIAL INTERFACES: (1) RS232 DB9F DCE, (1) RS232DBPM DTE, ND (1) RS485 TERMINAL BLOCK.
8. PROVIDE INTERNET APPLIANCE EQUAL TO SIMPLE COM TOOLS COM300-SNMP

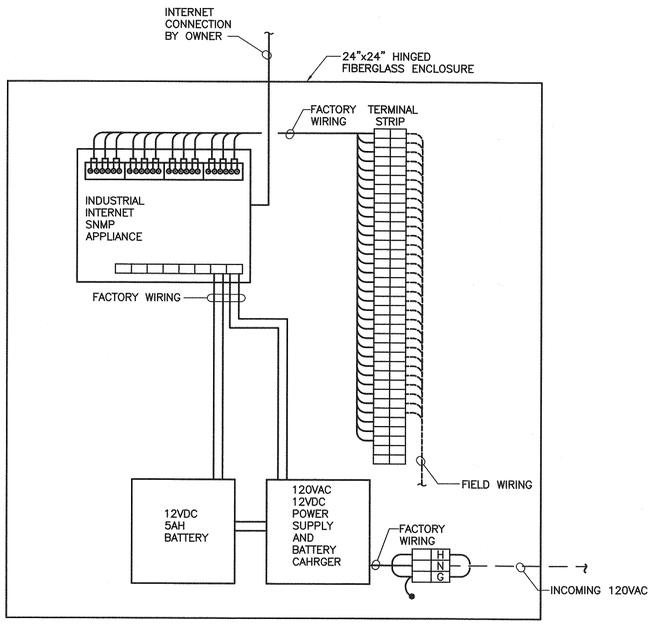

A E8 E8 INTERNET APPLIANCE ENCLOSURE ELEVATION
SCALE: NONE
TYPICAL OF 2

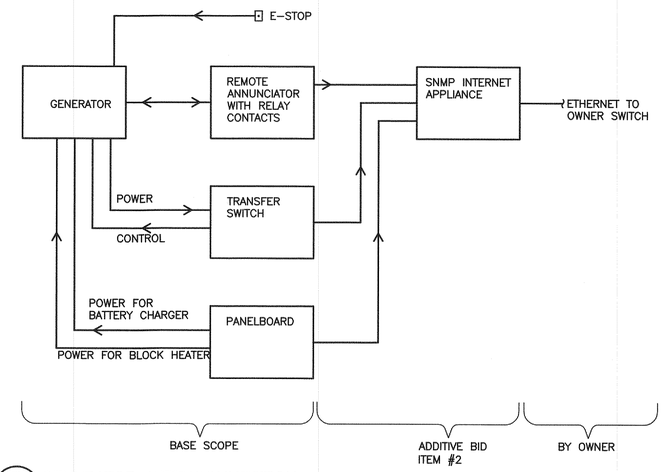

B E8 E8 GENERATOR INTERCONNECTION
SCALE: NONE

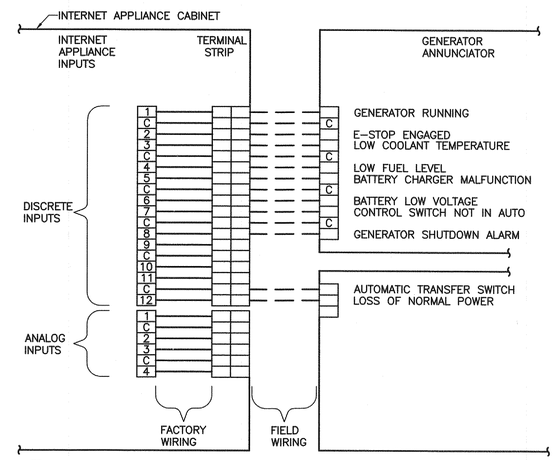

C E8 E8 INTERNET APPLIANCE INTERCONNECTION
SCALE: NONE

NO.	BY	REVISIONS	DATE

COMMONWEALTH OF VIRGINIA
SCOTT F. BURGER
Lic. No. 034338
9/2/11
PROFESSIONAL ENGINEER

VIRGINIA A&E, PLLC
1115 VISTA PARK DRIVE
FOREST, VIRGINIA 24551
PHONE: (434) 316-6001

Virginia A&E

CITY OF LYNCHBURG
INFORMATION TECHNOLOGY DEPARTMENT
GENERATOR UPGRADE

CLIENT PROJECT CODE:

LYNCHBURG, VIRGINIA

INTERNET MONITORING
(ADDITIVE BID ITEM #2)

PROJECT NO: 11075
DATE: 02 SEP 11

Full Scale Verification
0" 1"

Drawing No.:
E8

As-Built 2007

RENOVATION & ALTERATIONS
CITY OF LYNCHBURG - I.T. BUILDING
3550 YOUNG PLACE - LYNCHBURG, VA 24501
PROJECT NO: 06181

ARCHITECT

CRADDOCK - CUNNINGHAM
ARCHITECTURAL PARTNERS, P.C.

10 NINTH STREET
LYNCHBURG, VIRGINIA 24504
phone: (434) 846-8456
fax: (434) 846-4534

contact persons:
Shann Arrington (shann@ccappc.com)
Lynn A. Cunningham, AIA (lynn@ccappc.com)

ENGINEER

MASTER ENGINEERS & DESIGNERS, INC.

P.O. BOX 11989
LYNCHBURG, VIRGINIA 24506
phone: (434) 846-1350
fax: (434) 846-1351

contact persons:
Chris Snyder (Mechanical Engineer)
(csnyder@masterengineersinc.com)
Walter G. Miles (Electrical Engineer)
(wmiles@masterengineersinc.com)

OWNER

CITY OF LYNCHBURG
INFORMATION TECHNOLOGY DEPARTMENT

3550 YOUNG PLACE
LYNCHBURG, VIRGINIA 24501
phone: (434) 455-6020
fax: (434) 847-1497

contact person:
Sue Boyers (sue.boyers@lynchburgva.gov)

DRAWING LIST

ARCHITECTURAL DRAWINGS

CS1.1 COVER SHEET
LS1.1 LIFE SAFETY PLANS
A1.1 DEMOLITION - LEVEL ONE FLOOR PLAN
A1.2 DEMOLITION - LEVEL TWO FLOOR PLAN
A1.3 RENOVATED - LEVEL ONE FLOOR PLAN
A1.4 RENOVATED - LEVEL TWO FLOOR PLAN
A3.1 DOOR & WINDOW SCHEDULE, ELEVATIONS & DETAILS
A3.2 FINISH SCHEDULE

ELECTRICAL DRAWINGS

E0.1 LEGEND, NOTES, ABBREVIATIONS
E1.1 LIGHTING - LEVEL ONE - EXISTING CONDITIONS
E1.2 LIGHTING - LEVEL TWO - EXISTING CONDITIONS
E1.3 LIGHTING - LEVEL ONE - REWORKED CONDITIONS
E1.4 LIGHTING - LEVEL TWO - REWORKED CONDITIONS
E1.5 LIGHTING FIXTURE SCHEDULE (SHEET 1 OF 2)
E1.5 LIGHTING FIXTURE SCHEDULE (SHEET 2 OF 2)
E2.1 POWER & MISC. SYSTEMS - LEVEL ONE - EXISTING CONDITIONS
E2.2 POWER & MISC. SYSTEMS - LEVEL TWO - EXISTING CONDITIONS
E2.3 POWER & MISC. SYSTEMS - LEVEL ONE - REWORKED CONDITIONS
E2.4 POWER & MISC. SYSTEMS - LEVEL TWO - REWORKED CONDITIONS
E2.5 SERVICE ENTRANCE - REWORKED CONDITIONS
E3.1 ONE LINE DIAGRAM - EXISTING CONDITIONS (SHEET 1 OF 2)
E3.2 ONE LINE DIAGRAM - EXISTING CONDITIONS (SHEET 2 OF 2)
E3.3 ONE LINE DIAGRAM - REWORKED CONDITIONS (SHEET 1 OF 2)
E3.4 ONE LINE DIAGRAM - REWORKED CONDITIONS (SHEET 2 OF 2)
E4.1 POWER SCHEDULES (SHEET 1 OF 11)
E4.2 POWER SCHEDULES (SHEET 2 OF 11)
E4.3 POWER SCHEDULES (SHEET 3 OF 11)
E4.4 POWER SCHEDULES (SHEET 4 OF 11)
E4.5 POWER SCHEDULES (SHEET 5 OF 11)
E4.6 POWER SCHEDULES (SHEET 6 OF 11)
E4.7 POWER SCHEDULES (SHEET 7 OF 11)
E4.8 POWER SCHEDULES (SHEET 8 OF 11)
E4.9 POWER SCHEDULES (SHEET 9 OF 11)
E4.10 POWER SCHEDULES (SHEET 10 OF 11)
E4.11 POWER SCHEDULES (SHEET 11 OF 11)
E5.1 FIRE & SECURITY SYSTEMS - LEVEL ONE - REWORKED CONDITIONS
E5.2 FIRE & SECURITY SYSTEMS - LEVEL TWO - REWORKED CONDITIONS

MECHANICAL DRAWINGS

M1.0 HVAC - LEGEND, NOTES & SCHEDULES
M1.1 HVAC - LEVEL ONE
M1.2 HVAC - LEVEL TWO

PLUMBING DRAWINGS

P1.0 PLUMBING - PARTIAL PLAN, SCHEDULE & NOTES

VICINITY MAP

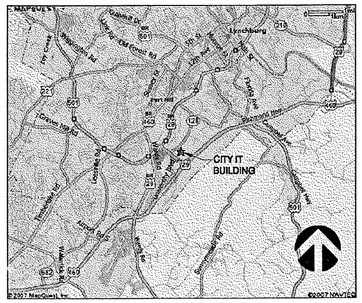

SITE MAP

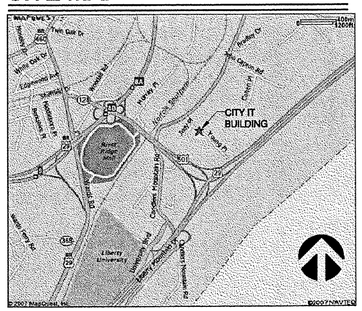

BUILDING CODE INFORMATION

References: Virginia USBC 2003 (IBC 2003 edition with amendments)

Use Group: B (occupancy: Information Technology - Civic Administration)

Construction Type: II B

Occupancy Separation: 2 hour

Building Area: First Floor: Existing 20,000 s.f.
Second Floor: Existing 9,375 s.f.

Allowable Area: Table 503: 23,000 s.f. per floor

Building Height: 2 story; 28 ft.

Allowable Building Height: 4 story; 55 ft.

Horizontal Separation: Greater than 10 ft. requires 0 hour FR rating (complies with table 602)

Fire Resistive Ratings: Complies with Table 1004.3.2.1
Corridors are 0 hour due to less than 30 occupants (Table 1004.3.2.1) and sprinkler system

Fire Protection: Sprinkler system, fire suppression system

Fire Alarm: Yes

Occupant Load: (calculated by using actual numbers 1003.2.2.1) See plan for number.

Length of Exit Access Travel: Max. 300 ft. per Table 1004.2.4

Number of Exits: See life safety plans (complies w/ Tables 1004.2.1 & 1004.2.4)

Storage Rooms Over 100 S.F.: 2 hour occupancy separation

ABBREVIATIONS

AB	ANCHOR BOLT
ABV	ABOVE
ACST	ACOUSTIC
ATC	ACOUSTICAL TILE CEILING
AFF	ABOVE FINISHED FLOOR
AGGR	AGGREGATE
AHR	ANCHOR
AL	ALUMINUM
APC	ARCHITECTURAL PRECAST
APPROX	APPROXIMATE
ARCH	ARCHITECTURAL
AVG	AVERAGE
BD	BOARD
BET	BETWEEN
BLDG	BUILDING
BLK	BLOCKING
BM	BEAM
BOT	BOTTOM
BRG	BEARING
BUR	BUILT-UP ROOF(ING)
C/C	CENTER TO CENTER
CIP	CAST-IN-PLACE, CAST IRON PIPE
CJ	CONTROL JOINT
℄, CL	CENTER LINE
CLG	CEILING
CLR	CLEAR
CMU	CONCRETE MASONRY UNIT
CO	CASED OPENING
COL	COLUMN
COMP	COMPRESSIBLE
CONC	CONCRETE, CONCENTRATED
CONN	CONNECT(ED), CONNECTION
CONSTR	CONSTRUCTION
CONT	CONTINUATION, CONTINUOUS, CONTROL
CONTR	CONTRACT, CONTRACTOR
COORD	COORDINATE
CORR	CORRIDOR, CORRUGATED
CT	CERAMIC TILE
CTR	CENTER
CTSK	COUNTERSUNK
D	DEPTH, DEEP
DBL	DOUBLE
DEPT	DEPARTMENT
DET	DETAIL(ED)
DIA	DIAMETER
DIAG	DIAGONAL, DIAGRAM
DIM	DIMENSION
DK	DECK
DN	DOWN
DOH	DOOR OPENING HEIGHT
DON	DOOR OPENING WIDTH
DP	DAMPPROOFING
DR	DOOR
DS	DOWNSPOUT
DWG	DRAWING
EA	EACH
EIFS	EXTERIOR INSULATION FINISH SYSTEM
EJ	EXPANSION JOINT
EL	ELEVATION
ELEC	ELECTRIC(AL)
ELEV	ELEVATOR, ELEVATION
ENCL	ENCLOSE(URE)
EQ	EQUAL
EQPT	EQUIPMENT
EWC	ELECTRIC WATER COOLER
EXH	EXHAUST
EXIST	EXISTING
EXP	EXPOSED
EXPN	EXPANSION
EXT	EXTERIOR
FD	FLOOR DRAIN
FDN	FOUNDATION
F/F	FACE TO FACE
FIN	FINISH(ED)
FL	FLOOR
FT	FOOT(FEET)
FRT	FIRE RETARDANT TREATED
FTG	FOOTING
FUT	FUTURE
GA	GAGE
GAL	GALLON
GALV	GALVANIZE(D)
GL	GLASS
GRTG	GRATING
GWB	GYPSUM WALLBOARD
GYP	GYPSUM
H	HEIGHT, HIGH
HB	HOSE BIBB
HBD	HARDBOARD
HC	HANDICAPPED
HDW	HARDWARE
HDWD	HARDWOOD
HM	HOLLOW METAL
HMD	HOLLOW METAL DOOR
HMF	HOLLOW METAL FRAME
HOR	HORIZONTAL
HPDL	HIGH PRESSURE DECORATIVE LAMINATE
HPT	HIGH POINT
HR	HANDRAIL
HT	HEIGHT
HVAC	HEATING, VENTILATING & AIR CONDITIONING
HW	HOT WATER
ID	INSIDE DIAMETER
IN	INCH
INCL	INCLUSIVE
INSTL	INSTALL(ED)
INSUL	INSULATE(ED)(ING)(ION)
INT	INTERIOR
INTMD	INTERMEDIATE
ISOL	ISOLATION
JAN	JANITOR
JST	JOIST
JT	JOINT(S), POWER TRANSMITTER
KOP	KNOCKOUT PANEL
L	LENGTH, LINE, LONG
LAB	LABORATORY
LAM	LAMINATE
LAV	LAVATORY
LB	POUND
LF	LINEAR FOOT
LG	LENGTH, LONG
LIN	LINEAR
LL	LIVE LOAD
LLH	LONG LEG HORIZONTAL
LLV	LONG LEG VERTICAL
LOC	LOCATION
LONG	LONGITUDINAL
LPT	LOW POINT
MACH	MACHINE
MAS	MASONRY
MATL	MATERIAL
MAX	MAXIMUM
MDF	MEDIUM DENSITY FIBERBOARD
MECH	MECHANICAL
MET	METAL
MEZZ	MEZZANINE
MFR	MANUFACTURER
MIN	MINIMUM
MISC	MISCELLANEOUS
MO	MASONRY OPENING
MOH	MASONRY OPENING HEIGHT
MOW	MASONRY OPENING WIDTH
MT	MOUNT
MUL	MULLION
MWP	MEMBRANE WATERPROOFING
N	NORTH
NIC	NOT IN CONTRACT
NO.	NUMBER
NOM	NOMINAL
NST	NONSLIP TREAD
NTS	NOT TO SCALE
OAH	OVERALL HEIGHT
OAW	OVERALL WIDTH
OC	ON CENTER
OD	OUTSIDE DIAMETER
OFCI	OWNER FURNISHED CONTRACTOR INSTALLED
OFF	OFFICE
OH	OVERHEAD
OPNG	OPENING
OPP	OPPOSITE
O/O	OUT TO OUT
PL	PLATE
ℙ	PROPERTY LINE
PLAS	PLASTER
PLYWD	PLYWOOD
PNLG	PANELING
PR	PAIR
PSF	POUNDS PER SQUARE FOOT
PSI	POUNDS PER SQUARE INCH
PT	PRESSURE TREATED, POINT, POINT OF TANG.
PTN	PARTITION
PVC	POLYVINYL CHLORIDE, POINT OF VERTICAL CURVE
QT	QUARRY TILE
R	RADIUS, REACTION, RISER, RESISTANCE
RA	RETURN AIR
RCPT	RECEPTACLE(S)
RD	ROOF DRAIN
REF	REFERENCE
REINF	REINFORCE(MENT)(ING)
REQD	REQUIRED
REQMT	REQUIREMENT(S)
RESIL	RESILIENT
RET	RETURN
REV	REVERSE ACTING, REVISED, REVISION
RF	RETURN FAN, ROOF
RG	RETURN GRILLE
RM	ROOM
RO	ROUGH OPENING
RU	ROLL UP
S	SOLID, SOUTH, SWITCH
SA	STATUS ALARM, SUPPLY AIR
SCF	STEEL CHANNEL FRAME
SCHED	SCHEDULE
SECT	SECTION
SF	SQUARE FEET (FOOT)
SG	SUPPLY GRILLE
SGFU	STRUCTURAL GLAZED FACING UNITS
SH	SHEET
SIM	SIMILAR
SLP	SLOPE
SNT	SEALANT
SPEC	SPECIFICATION(S)
SPM	SINGLE PLY MEMBRANE
SQ	SQUARE
SST	STAINLESS STEEL
STC	SOUND TRANSMISSION COEFFICIENT
STD	STANDARD
STL	STEEL
STO	STORAGE
STRUCT	STRUCTURAL
SUSP	SUSPEND(ED)
SYM	SYMMETRICAL
SYS	SYSTEM
TEL	TELEPHONE
T&G	TONGUE AND GROOVE
THK	THICK(NESS)
THR	THRESHOLD
THRD	TREAD
TOJ	TOP OF JOIST
TOS	TOP OF STEEL
TOT	TOTAL
TRTD	TREATED
T'STAT	THERMOSTAT
TYP	TYPICAL
UON	UNLESS OTHERWISE NOTED
UTIL	UTILITY
VCT	VINYL COMPOSITION TILE
VENT	VENTILATE
VERT	VERTICAL
VEST	VESTIBULE
VIF	VERIFY IN FIELD
VTR	VENT THRU ROOF
VW	VIEW WINDOW
VWC	VINYL WALL COVERING
W/	WITH
WC	WATER CLOSET, WATER COLUMN
WD	WOOD
WDO	WINDOW
W/O	WITHOUT
WOH	WINDOW OPENING HEIGHT
WOW	WINDOW OPENING WIDTH
WP	WEATHERPROOF, WORKING POINT
WRGWB	WATER RESISTANT GYPSUM WALLBOARD
WWF	WELDED WIRE FABRIC
W	WEST

SYMBOL LEGEND

PRE CAST ARCHITECTURAL CONCRETE "CAST STONE"
GYPSUM WALLBOARD
BRICK OR MASONRY VENEER
CONCRETE MASONRY UNITS "CMU"
RIGID INSULATION
BATT INSULATION
COLUMN TAG
ELEVATION MARKER (T.O.S. 0'-0")
PARTITION TAG (A)
DOOR NUMBER (102)
LOUVER TAG (L-3)
WINDOW TAG (AL-1) (W1)
ROOM NAME / NUMBER (MEN'S TOILET 2)
GENERAL NOTE TAG (1)
MAXIMUM EXIT ACCESS TRAVEL DISTANCE (121')
EXIT SIGN
FINISH WOOD
PLYWOOD
CONCRETE
CRUSHED STONE BASE MATERIAL
EARTH
STEEL
ELEVATION REFERENCE SYMBOL (1" A9.1 ELEV. SHOWN ON THIS DWG)
DETAIL REFERENCE SYMBOL (1" A6.1 DETAIL SHOWN ON THIS DWG)
SECTION REFERENCE SYMBOL (1" A5.1 SECTION SHOWN ON THIS DWG)

CRADDOCK - CUNNINGHAM
ARCHITECTURAL PARTNERS, P.C.
10 NINTH STREET, LYNCHBURG, VIRGINIA 24504 434.846.8456 FAX 434.846.4534
EMAIL: INFO@CRADDOCKCUNNINGHAM.COM

RENOVATION & ALTERATIONS
CITY OF LYNCHBURG - I.T. BLDG.
3550 YOUNG PLACE - LYNCHBURG, VA 24501
PROJECT NO: 06181

COMMONWEALTH OF VIRGINIA
LYNN A. CUNNINGHAM
No. 8169
ARCHITECT

WRITTEN DIMENSIONS ON THESE DRAWINGS SHALL TAKE PRECEDENCE OVER SCALED DIMENSIONS. CONTRACTORS SHALL VERIFY AND BE RESPONSIBLE FOR ALL DIMENSIONS AND CONDITIONS ON THE JOB AND THIS OFFICE MUST BE NOTIFIED OF ANY VARIATION FROM THE DIMENSIONS AND CONDITIONS SHOWN BY THESE DRAWINGS.

DESIGNED: SPA
DRAWN: SPA / RTJ
CHECKED: SPA
DATE: 02-23-07
REVISIONS:

COVER SHEET

SET NO. _____

CS1.1

E:\Municipal\City IT Building\Drawing\CD\Sheets\CS1.1.dwg, Layout1, 2/27/2007 4:56:33 PM

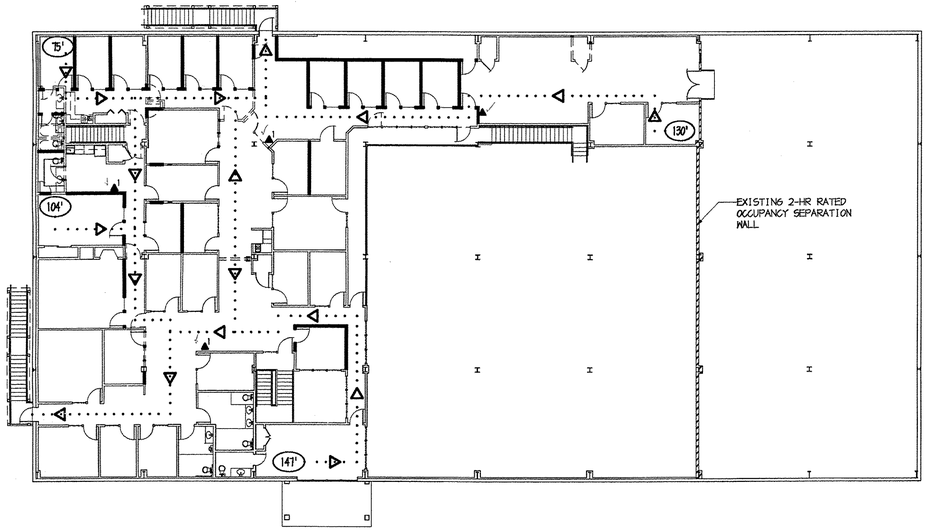

2 / LS1.1 LEVEL TWO FLOOR PLAN - LIFE SAFETY
1/16"=1'-0"

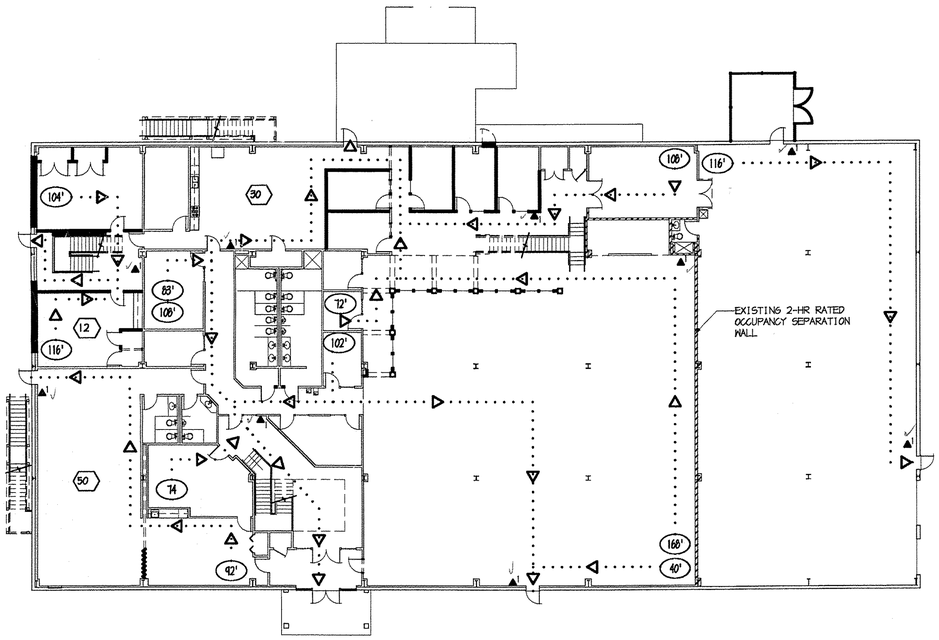

1 / LS1.1 LEVEL ONE FLOOR PLAN - LIFE SAFETY
1/16"=1'-0"

SYMBOL LEGEND

(???) MAXIMUM DISTANCE TRAVELED TO EXIT ALONG INDICATED EXIT ACCESS (WITH SPRINKLER SYSTEM, SHALL NOT EXCEED 300')
NOTE: THE COMMON PATH OF EGRESS TRAVEL WHICH THE OCCUPANTS ARE REQUIRED TO TRAVERSE BEFORE TWO SEPARATE AND DISTINCT PATHS OF EGRESS TRAVEL TO TWO EXITS ARE AVAILABLE SHALL NOT EXCEED 100' FOR B-USE GROUP OCCUPANCY WITH A SPRINKLER SYSTEM.

(???) OCCUPANT LOAD IN ROOM

DIRECTION OF EGRESS

2-HR FIRE RATED

FEC-A - CLASS A WALL MOUNT FIRE EXTINGUISHER

FEC-C - CLASS C NON-CONDUCTIVE WALL MOUNT FIRE EXTINGUISHER

PLAN NORTH

TRUE NORTH

CRADDOCK - CUNNINGHAM ARCHITECTURAL PARTNERS, P.C.
10 NINTH STREET, LYNCHBURG, VIRGINIA 24504 434-846-6068 FAX 434-846-4504
EMAIL: INFO@CRADDOCKCUNNINGHAM.COM

RENOVATION & ALTERATIONS
CITY OF LYNCHBURG - I.T. BLDG.
3550 YOUNG PLACE - LYNCHBURG, VA 24501
PROJECT NO: 06181

COMMONWEALTH OF VIRGINIA
COLYNN A. CUNNINGHAM
No. 8169
ARCHITECT

WRITTEN DIMENSIONS ON THESE DRAWINGS SHALL TAKE PRECEDENCE OVER SCALED DIMENSIONS. CONTRACTORS SHALL VERIFY AND BE RESPONSIBLE FOR ALL DIMENSIONS AND CONDITIONS ON THE JOB AND THIS OFFICE MUST BE NOTIFIED OF ANY VARIATION FROM THE DIMENSIONS AND CONDITIONS SHOWN BY THESE DRAWINGS.

DESIGNED: SPA
DRAWN: SPA/RTJ
CHECKED: SPA
DATE: 02-23-07
REVISIONS:

LIFE SAFETY PLANS

LS1.1

E:\Municipal\City IT Building\Drawing\CD\Sheets\LS1.1.dwg, LS1.1, 2/27/2007 4:58:45 PM

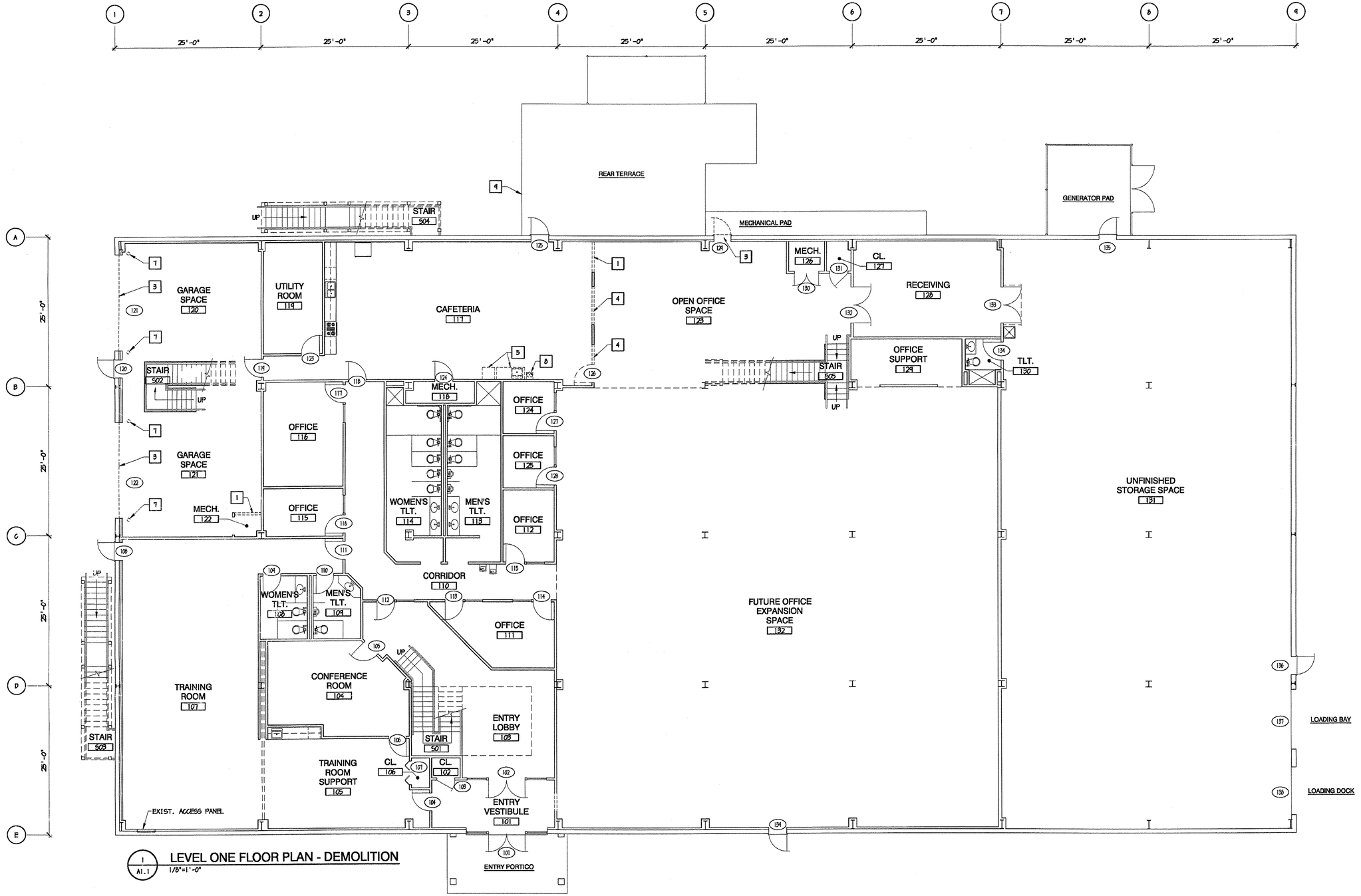

1 / A1.1 LEVEL ONE FLOOR PLAN - DEMOLITION
1/8"=1'-0"

DEMOLITION KEY NOTES

1. REMOVE WALL, DOOR, WINDOW, ETC.
2. REMOVE FAN. FILL IN WALL.
3. REMOVE DOOR. FILL IN WALL.
4. REMOVE WALL FOR NEW DOOR, WINDOW, ETC.
5. REMOVE FIXTURE, EQUIPMENT, ETC.
6. REMOVE AND RELOCATE WINDOW AND DOOR #225 TO OPPOSITE POSITIONS.
7. REMOVE BOLLARD.
8. REMOVE AND RELOCATE ENG TO LEVEL TWO (SUPPORT #232)
9. EXISTING FENCING GATE TO BE REMOVED, VERIFY LOCATION IN FIELD.

GENERAL NOTES

1. SALVAGE ALL REMOVED DOORS AND WINDOWS AND STORE ON SITE. COORDINATE WITH OWNER ON STORAGE LOCATION.
2. ALL EXISTING WALL AND COLUMN LOCATIONS TO BE VERIFIED IN FIELD.
3. ALL EXISTING OPENING DIMENSIONS AND LOCATIONS TO BE VERIFIED IN FIELD.

PLAN NORTH
TRUE NORTH

CRADDOCK - CUNNINGHAM ARCHITECTURAL PARTNERS, P.C.
10 NINTH STREET, LYNCHBURG, VIRGINIA 24504 434.846.8455 FAX 434.846.4534
EMAIL: INFO@CRADDOCKCUNNINGHAM.COM

RENOVATION & ALTERATIONS
CITY OF LYNCHBURG - I.T. BLDG.
3550 YOUNG PLACE - LYNCHBURG, VA 24501
PROJECT NO: 06181

COMMONWEALTH OF VIRGINIA
GLYNN A. CUNNINGHAM
No. 8169
ARCHITECT

WRITTEN DIMENSIONS ON THESE DRAWINGS SHALL TAKE PRECEDENCE OVER SCALED DIMENSIONS. CONTRACTORS SHALL VERIFY AND BE RESPONSIBLE FOR, ALL DIMENSIONS AND CONDITIONS ON THE JOB AND THIS OFFICE MUST BE NOTIFIED OF ANY VARIATION FROM THE DIMENSIONS AND CONDITIONS SHOWN BY THESE DRAWINGS.

DESIGNED: SPA
DRAWN: SPA/RTJ
CHECKED: SPA
DATE: 02-23-07
REVISIONS:

DEMOLITION LEVEL ONE FLOOR PLAN

A1.1

E:\Municipal\City IT Building\Drawing\CD\Sheets\A1.1.dwg, A1.1, 2/27/2007 4:42:12 PM

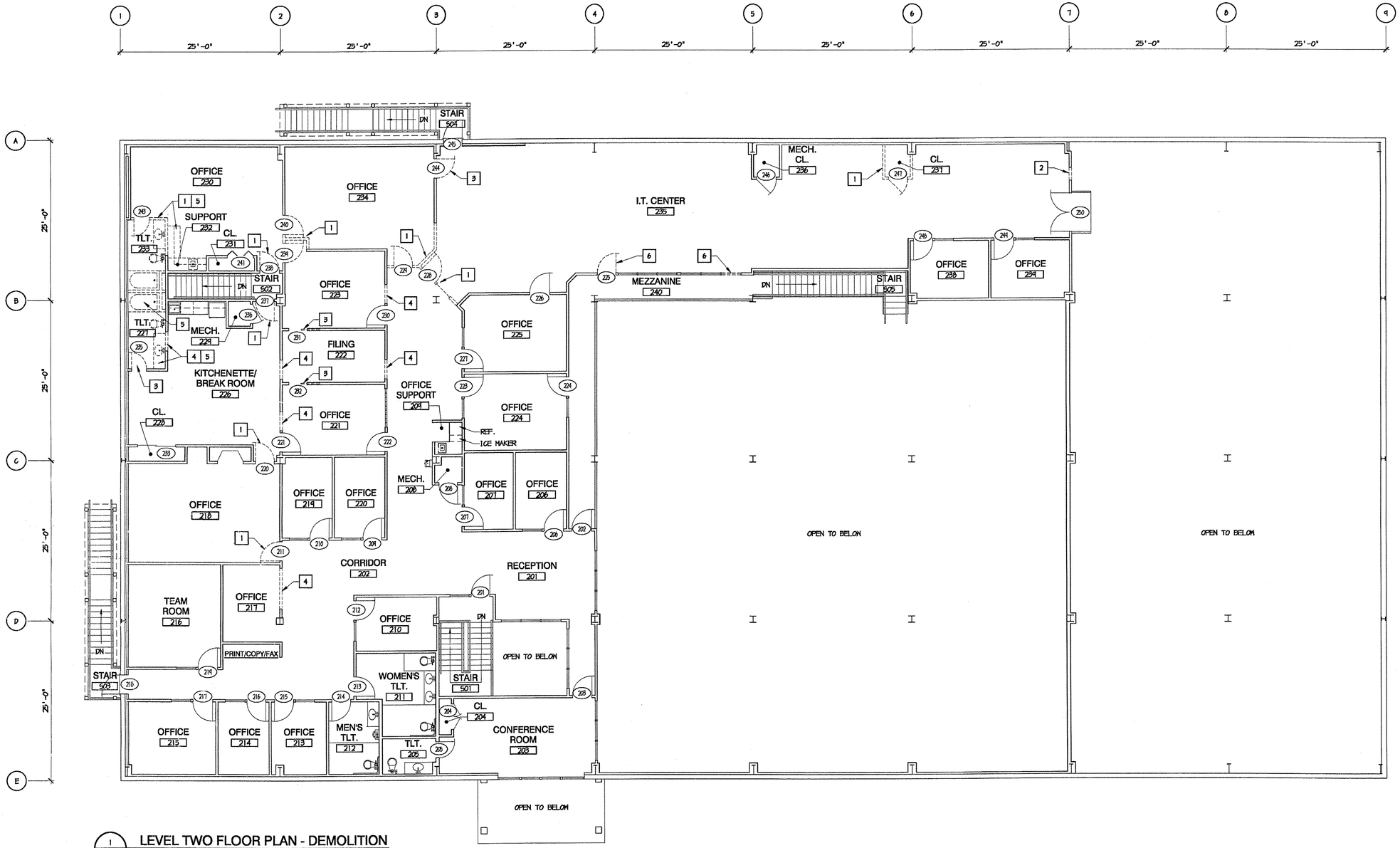

1 / A1.2 LEVEL TWO FLOOR PLAN - DEMOLITION
1/8"=1'-0"

DEMOLITION KEY NOTES

1. REMOVE WALL, DOOR, WINDOW, ETC.
2. REMOVE FAN. FILL IN WALL.
3. REMOVE DOOR. FILL IN WALL.
4. REMOVE WALL FOR NEW DOOR, WINDOW, ETC.
5. REMOVE FIXTURE, EQUIPMENT, ETC.
6. REMOVE AND RELOCATE WINDOW AND DOOR #225 TO OPPOSITE POSITIONS.
7. REMOVE BOLLARD.
8. REMOVE AND RELOCATE EMC TO LEVEL TWO (SUPPORT #232)
9. EXISTING FENCING GATE TO BE REMOVED, VERIFY LOCATION IN FIELD.

GENERAL NOTES

1. SALVAGE ALL REMOVED DOORS AND WINDOWS AND STORE ON SITE. COORDINATE WITH OWNER ON STORAGE LOCATION.
2. ALL EXISTING WALL AND COLUMN LOCATIONS TO BE VERIFIED IN FIELD.
3. ALL EXISTING OPENING DIMENSIONS AND LOCATIONS TO BE VERIFIED IN FIELD.

PLAN NORTH

TRUE NORTH

CRADDOCK - CUNNINGHAM
ARCHITECTURAL PARTNERS, P.C.
10 NINTH STREET, LYNCHBURG, VIRGINIA 24504 434.846.6458 FAX 434.846.4254
EMAIL: INFO@CRADDOCKCUNNINGHAM.COM

RENOVATION & ALTERATIONS
CITY OF LYNCHBURG - I.T. BLDG.
3550 YOUNG PLACE - LYNCHBURG, VA 24501

PROJECT NO: 06181

COMMONWEALTH OF VIRGINIA
CLYNN A. CUNNINGHAM
No. 8169
ARCHITECT

WRITTEN DIMENSIONS ON THESE DRAWINGS SHALL TAKE PRECEDENCE OVER SCALED DIMENSIONS. CONTRACTORS SHALL VERIFY AND BE RESPONSIBLE FOR, ALL DIMENSIONS AND CONDITIONS ON THE JOB AND THIS OFFICE MUST BE NOTIFIED OF ANY VARIATION FROM THE DIMENSIONS AND CONDITIONS SHOWN BY THESE DRAWINGS.

DESIGNED: SPA
DRAWN: SPA/RTJ
CHECKED: SPA
DATE: 02-23-07
REVISIONS:

DEMOLITION LEVEL TWO FLOOR PLAN

A1.2

E:\Municipal\City IT Building\Drawing\CD\Sheets\A1.2.dwg, A1.2, 2/27/2007 4:43:34 PM

GENERAL NOTES

1. SALVAGE ALL REMOVED DOORS AND WINDOWS AND STORE ON SITE. COORDINATE WITH OWNER ON STORAGE LOCATION.
2. ALL EXISTING WALL AND COLUMN LOCATIONS TO BE VERIFIED IN FIELD.
3. ALL EXISTING OPENING DIMENSIONS AND LOCATIONS TO BE VERIFIED IN FIELD.
4. PERIMETER ALARM PROGRAM PAD LOCATION, VERIFY W/ ELECTRICAL.
5. SEE MECHANICAL DWGS FOR NEW EXTERIOR WALL PENETRATIONS & LOUVER SIZES.

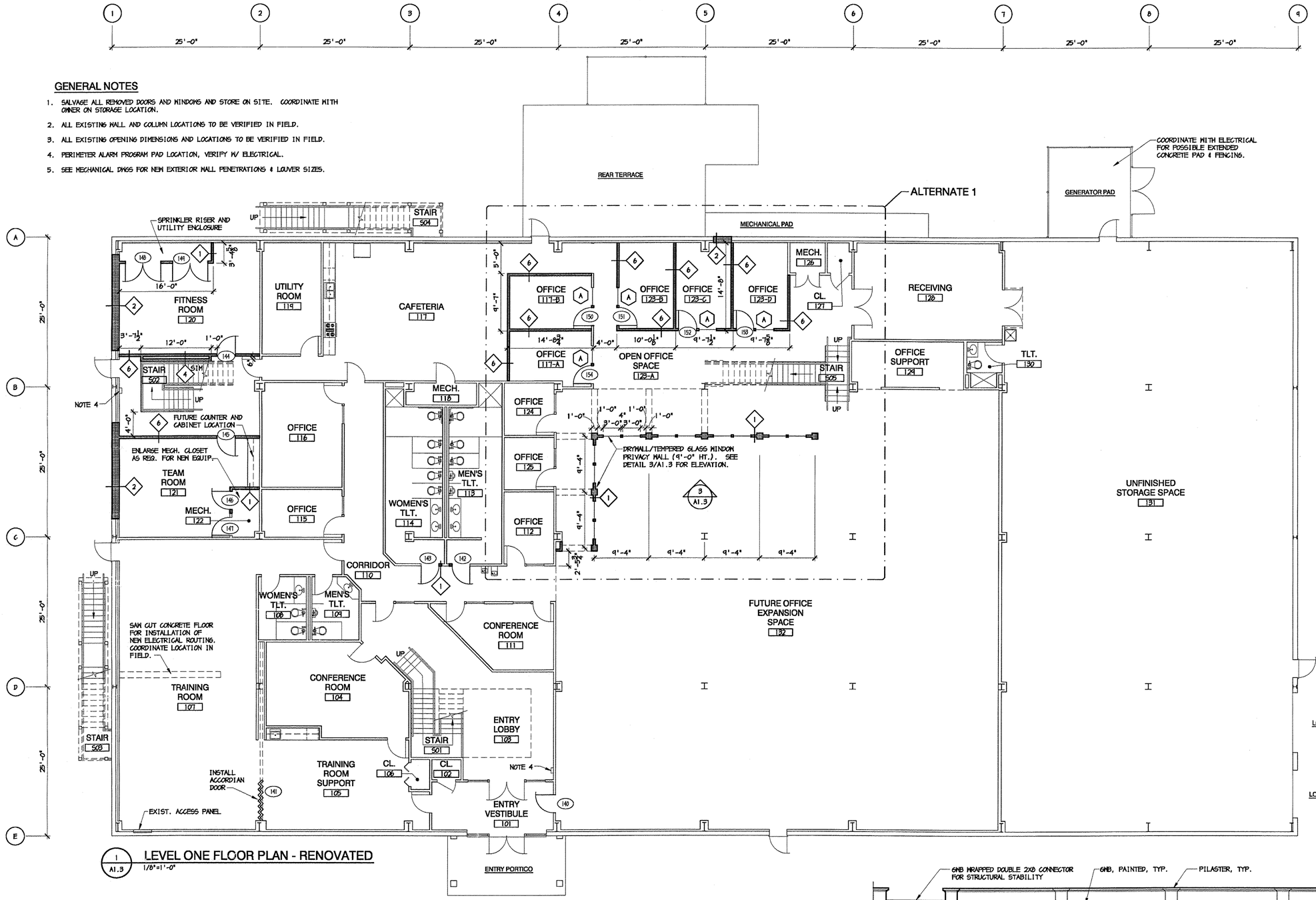

1 / A1.3 LEVEL ONE FLOOR PLAN - RENOVATED
1/8"=1'-0"

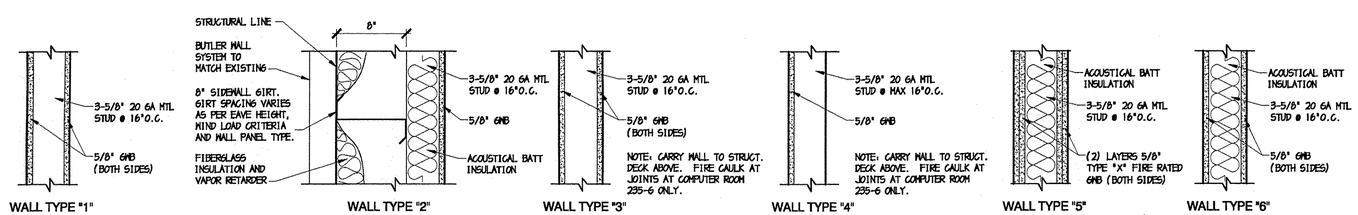

2 / A1.3 WALL TYPES
1 1/2"=1'-0"

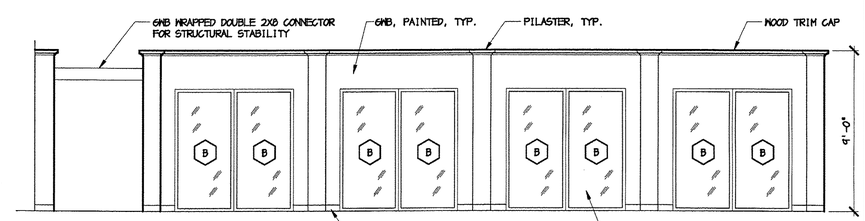

3 / A1.3 PRIVACY WALL ELEVATION
1/4"=1'-0"

PLAN NORTH

TRUE NORTH

CRADDOCK - CUNNINGHAM ARCHITECTURAL PARTNERS, P.C.
10 NINTH STREET, LYNCHBURG, VIRGINIA 24504 434.846.8456 FAX 434.846.4504
EMAIL: INFO@CRADDOCKCUNNINGHAM.COM

RENOVATION & ALTERATIONS
CITY OF LYNCHBURG - I.T. BLDG.
3550 YOUNG PLACE - LYNCHBURG, VA 24501
PROJECT NO: 06181

COMMONWEALTH OF VIRGINIA
CLYNN A. CUNNINGHAM
No. 8169
ARCHITECT

WRITTEN DIMENSIONS ON THESE DRAWINGS SHALL TAKE PRECEDENCE OVER SCALED DIMENSIONS. CONTRACTORS SHALL VERIFY AND BE RESPONSIBLE FOR ALL DIMENSIONS AND CONDITIONS ON THE JOB AND THIS OFFICE MUST BE NOTIFIED OF ANY VARIATION FROM THE DIMENSIONS AND CONDITIONS SHOWN BY THESE DRAWINGS.

DESIGNED: SPA
DRAWN: SPA/RTJ
CHECKED: SPA
DATE: 02-23-07
REVISIONS:

RENOVATED LEVEL ONE FLOOR PLAN

A1.3

E:\Municipal\City IT Building\Drawing\CD\Sheets\A1.3.dwg, A1.3, 2/27/2007 4:44:32 PM

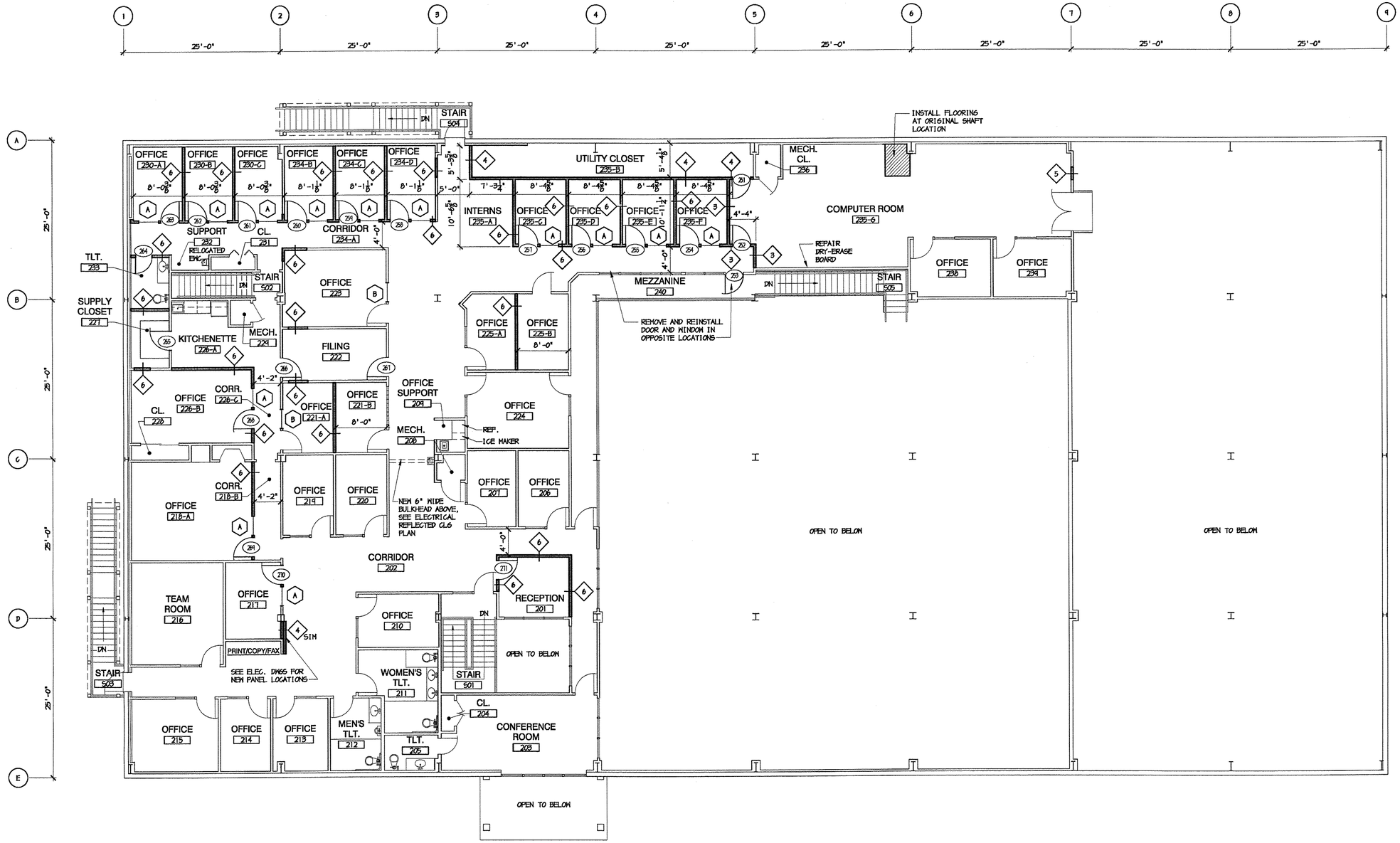

1 / A1.4 LEVEL TWO FLOOR PLAN - RENOVATED
1/8"=1'-0"

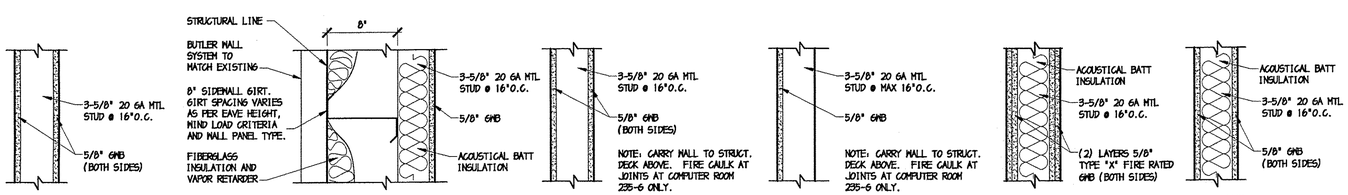

2 / A1.4 WALL TYPES
1 1/2"=1'-0"

GENERAL NOTES

1. SALVAGE ALL REMOVED DOORS AND WINDOWS AND STORE ON SITE. COORDINATE WITH OWNER ON STORAGE LOCATION.
2. ALL EXISTING WALL AND COLUMN LOCATIONS TO BE VERIFIED IN FIELD.
3. ALL EXISTING OPENING DIMENSIONS AND LOCATIONS TO BE VERIFIED IN FIELD.
4. PERIMETER ALARM PROGRAM PAD LOCATION, VERIFY W/ ELECTRICAL.
5. SEE MECHANICAL DWGS FOR NEW EXTERIOR WALL PENETRATIONS & LOUVER SIZES.

PLAN NORTH

TRUE NORTH

CRADDOCK - CUNNINGHAM ARCHITECTURAL PARTNERS, P.C.
19 WATER STREET, LYNCHBURG, VIRGINIA 24504 434-846-4846 FAX 434 846-4324
EMAIL: INFO@CRADDOCKCUNNINGHAM.COM

RENOVATION & ALTERATIONS
CITY OF LYNCHBURG - I.T. BLDG.
3550 YOUNG PLACE - LYNCHBURG, VA 24501
PROJECT NO: 06181

COMMONWEALTH OF VIRGINIA
LYNN A. CUNNINGHAM
No. 8169
ARCHITECT

WRITTEN DIMENSIONS ON THESE DRAWINGS SHALL TAKE PRECEDENCE OVER SCALED DIMENSIONS. CONTRACTORS SHALL VERIFY AND BE RESPONSIBLE FOR, ALL DIMENSIONS AND CONDITIONS ON THE JOB AND THIS OFFICE MUST BE NOTIFIED OF ANY VARIATION FROM THE DIMENSIONS AND CONDITIONS SHOWN BY THESE DRAWINGS.

DESIGNED: SPA
DRAWN: SPA/RTJ
CHECKED: SPA
DATE: 02-23-07
REVISIONS:

RENOVATED LEVEL TWO FLOOR PLAN

A1.4

E:\Wundcpa\City IT Building\Drawing\CD\Sheets\A1.4.dwg, A1.4, 2/27/2007 4:45:33 PM

DOOR SCHEDULE

SYMBOL

	Tag	Door Width	Door Height	Door Thick	Door Mat'l	Door Elev	Frame Mat'l	Frame Elev	Fire Label	Glass	Details H	Details J	Details S	Closer	Remarks
	1ST FLOOR														
EXISTING	101	PR. 3'-0"	7'-0"	1 3/4"	ALUM	A	ALUM	-	-	YES					TINTED, TEMPERED GLAZING
EXISTING	102	PR. 3'-0"	7'-0"	1 3/4"	ALUM	A	ALUM	-	-	YES					CLEAR, TEMPERED GLAZING
EXISTING	103	3'-0"	6'-8"	1 3/4"	WOOD	B	WOOD	-	-						
EXISTING	104	3'-0"	6'-8"	1 3/4"	WOOD	B	WOOD	-	-						
EXISTING	105	3'-0"	6'-8"	1 3/4"	WOOD	B	WOOD	-	-						
EXISTING	106	3'-0"	6'-8"	1 3/4"	WOOD	B	WOOD	-	-						
EXISTING	107	PR. 2'-0"	6'-8"	1 3/8"	WOOD	E	WOOD	-	-						BI-FOLD
EXISTING	108	3'-0"	7'-0"	1 3/4"	METAL	B	METAL	F-1	90 MIN.						
EXISTING	109	3'-0"	6'-8"	1 3/4"	WOOD	B	WOOD	-	-						
EXISTING	110	3'-0"	6'-8"	1 3/4"	WOOD	B	WOOD	-	-						
EXISTING	111	3'-0"	6'-8"	1 3/4"	WOOD	B	WOOD	-	-						
EXISTING	112	3'-0"	6'-8"	1 3/4"	WOOD	B	WOOD	-	-						3'-0" SIDE LITE W/CLEAR, TEMPERED GLAZING
EXISTING	113	3'-0"	6'-8"	1 3/4"	WOOD	B	WOOD	-	-						3'-0" SIDE LITE W/CLEAR, TEMPERED GLAZING
EXISTING	114	3'-0"	6'-8"	1 3/4"	WOOD	B	WOOD	-	-						3'-0" SIDE LITE W/CLEAR, TEMPERED GLAZING
EXISTING	115	3'-0"	6'-8"	1 3/4"	WOOD	B	WOOD	-	-						3'-0" SIDE LITE W/CLEAR, TEMPERED GLAZING
EXISTING	116	3'-0"	6'-8"	1 3/4"	WOOD	B	WOOD	-	-						3'-0" SIDE LITE W/CLEAR, TEMPERED GLAZING
EXISTING	117	3'-0"	6'-8"	1 3/4"	WOOD	B	WOOD	-	-						3'-0" SIDE LITE W/CLEAR, TEMPERED GLAZING
EXISTING	118	3'-0"	6'-8"	1 3/4"	WOOD	G	WOOD	-	-	YES					
EXISTING	119	3'-0"	6'-8"	1 3/4"	WOOD	B	METAL	F-1	90 MIN.						
EXISTING	120	3'-0"	7'-0"	1 3/4"	METAL	B	METAL	-	-						
EXISTING	121	16'-0"	8'-0"	-	-	C	METAL	-	-						STEEL SECTIONAL O.H. DOOR, REMOVE & SALVAGE
EXISTING	122	16'-0"	8'-0"	-	-	C	METAL	-	-						STEEL SECTIONAL O.H. DOOR, REMOVE & SALVAGE
EXISTING	123	3'-0"	6'-8"	1 3/4"	WOOD	B	WOOD	-	-						
EXISTING	124	3'-0"	6'-8"	1 3/4"	WOOD	B	WOOD	-	-						
EXISTING	125	3'-0"	7'-0"	1 3/4"	METAL	B	METAL	-	-						
EXISTING	126	3'-0"	6'-8"	1 3/4"	WOOD	G	WOOD	-	-						
EXISTING	127	3'-0"	6'-8"	1 3/4"	WOOD	B	WOOD	-	-						3'-0" SIDE LITE W/CLEAR, TEMPERED GLAZING
EXISTING	128	3'-0"	6'-8"	1 3/4"	WOOD	B	WOOD	-	-						3'-0" SIDE LITE W/CLEAR, TEMPERED GLAZING
EXISTING	129	3'-0"	7'-0"	1 3/4"	METAL	B	METAL	F-1	-						3'-0" SIDE LITE W/CLEAR, TEMPERED GLAZING
EXISTING	130	PR. 2'-0"	6'-8"	1 3/4"	WOOD	D	WOOD	-	-						
EXISTING	131	3'-0"	6'-8"	1 3/4"	WOOD	B	WOOD	-	-						
EXISTING	132	PR. 3'-0"	6'-8"	1 3/4"	WOOD	D	WOOD	-	-						
EXISTING	133	PR. 3'-0"	6'-8"	1 3/4"	WOOD	D	WOOD	-	-						CHANGE TO METAL FRAME, 90 MIN. RATED METAL DOORS
EXISTING	134	3'-0"	6'-8"	1 3/4"	WOOD	B	WOOD	-	-						
EXISTING	135	3'-0"	7'-0"	1 3/4"	METAL	B	METAL	F-1	-						
EXISTING	136	3'-0"	7'-0"	1 3/4"	METAL	B	METAL	F-1	-						
EXISTING	137	10'-0"	10'-0"	-	-	C	METAL	-	-						STEEL SECTIONAL O.H. DOOR
EXISTING	138	8'-0"	8'-0"	-	-	C	METAL	-	-						STEEL SECTIONAL O.H. DOOR
EXISTING	139	3'-0"	7'-0"	1 3/4"	METAL	B	METAL	F-1	-						
NEW	140	3'-0"	6'-8"	1 3/4"	WOOD	B	METAL	F-1	-		7/A3.1	10/A3.1	13/A3.1	YES	PANIC HARDWARE
NEW	141	13'-9" VIF	10'-0" VIF	-	-	-	-	-	-						ACCORDIAN DOOR, SEE SPECS
NEW	142	3'-0"	6'-8"	1 3/4"	WOOD	B	METAL	F-1	-		7/A3.1	10/A3.1	13/A3.1	YES	
NEW	143	3'-0"	6'-8"	1 3/4"	WOOD	B	METAL	F-1	-		7/A3.1	10/A3.1	13/A3.1	YES	
NEW	144	3'-0"	6'-8"	1 3/4"	WOOD	B	METAL	F-1	-		7/A3.1	10/A3.1	13/A3.1		
NEW	145	3'-0"	6'-8"	1 3/4"	WOOD	B	METAL	F-1	-		7/A3.1	10/A3.1	13/A3.1		
NEW	146	3'-0"	6'-8"	1 3/4"	WOOD	B	METAL	F-1	-		7/A3.1	10/A3.1	13/A3.1		
NEW	147	3'-0"	6'-8"	1 3/4"	WOOD	B	METAL	F-1	-		7/A3.1	10/A3.1	13/A3.1		
NEW	148	PR. 3'-0"	6'-8"	1 3/4"	WOOD	D	METAL	F-3	-		7/A3.1	10/A3.1	13/A3.1		
NEW	149	PR. 3'-0"	6'-8"	1 3/4"	WOOD	D	METAL	F-3	-		7/A3.1	10/A3.1	13/A3.1		
ALT. 1	150	3'-0"	6'-8"	1 3/4"	WOOD	B	METAL	F-2	-		7/A3.1	10/A3.1	12/A3.1		
ALT. 1	151	3'-0"	6'-8"	1 3/4"	WOOD	B	METAL	F-2	-		7/A3.1	10/A3.1	12/A3.1		
ALT. 1	152	3'-0"	6'-8"	1 3/4"	WOOD	B	METAL	F-2	-		7/A3.1	10/A3.1	12/A3.1		
ALT. 1	153	3'-0"	6'-8"	1 3/4"	WOOD	B	METAL	F-2	-		7/A3.1	10/A3.1	12/A3.1		
ALT. 1	154	3'-0"	6'-8"	1 3/4"	WOOD	B	METAL	F-2	-		7/A3.1	10/A3.1	12/A3.1		
	2ND FLOOR														
EXISTING	201	3'-0"	6'-8"	1 3/4"	WOOD	B	WOOD	-	-						3'-0" SIDE LITE W/CLEAR, TEMPERED GLAZING
EXISTING	202	3'-0"	6'-8"	1 3/4"	WOOD	B	WOOD	-	-						
EXISTING	203	3'-0"	6'-8"	1 3/4"	WOOD	B	WOOD	-	-						
EXISTING	204	PR. 2'-0"	6'-8"	1 3/8"	WOOD	D	WOOD	-	-						
EXISTING	205	2'-6" VIF	6'-8"	1 3/4"	WOOD	B	WOOD	-	-						
EXISTING	206	3'-0"	6'-8"	1 3/4"	WOOD	B	WOOD	-	-						3'-0" SIDE LITE W/CLEAR, TEMPERED GLAZING
EXISTING	207	3'-0"	6'-8"	1 3/4"	WOOD	B	WOOD	-	-						3'-0" SIDE LITE W/CLEAR, TEMPERED GLAZING
EXISTING	208	3'-0"	6'-8"	1 3/4"	WOOD	B	WOOD	-	-						
EXISTING	209	3'-0"	6'-8"	1 3/4"	WOOD	B	WOOD	-	-						3'-0" SIDE LITE W/CLEAR, TEMPERED GLAZING
EXISTING	210	3'-0"	6'-8"	1 3/4"	WOOD	B	WOOD	-	-						3'-0" SIDE LITE W/CLEAR, TEMPERED GLAZING
EXISTING	211	3'-0"	6'-8"	1 3/4"	WOOD	B	WOOD	-	-						REMOVE & SALVAGE
EXISTING	212	3'-0"	6'-8"	1 3/4"	WOOD	B	WOOD	-	-						
EXISTING	213	3'-0"	6'-8"	1 3/4"	WOOD	B	WOOD	-	-						
EXISTING	214	3'-0"	6'-8"	1 3/4"	WOOD	B	WOOD	-	-						
EXISTING	215	3'-0"	6'-8"	1 3/4"	WOOD	B	WOOD	-	-						3'-0" SIDE LITE W/CLEAR, TEMPERED GLAZING
EXISTING	216	3'-0"	6'-8"	1 3/4"	WOOD	B	WOOD	-	-						3'-0" SIDE LITE W/CLEAR, TEMPERED GLAZING
EXISTING	217	3'-0"	6'-8"	1 3/4"	WOOD	B	WOOD	-	-						3'-0" SIDE LITE W/CLEAR, TEMPERED GLAZING
EXISTING	218	3'-0"	7'-0"	1 3/4"	METAL	B	METAL	F-1	90 MIN.						
EXISTING	219	3'-0"	6'-8"	1 3/4"	WOOD	B	WOOD	-	-						3'-0" SIDE LITE W/CLEAR, TEMPERED GLAZING
EXISTING	220	3'-0"	6'-8"	1 3/4"	WOOD	B	WOOD	-	-						REMOVE & SALVAGE
EXISTING	221	3'-0"	6'-8"	1 3/4"	WOOD	B	WOOD	-	-						
EXISTING	222	3'-0"	6'-8"	1 3/4"	WOOD	B	WOOD	-	-						
EXISTING	223	3'-0"	6'-8"	1 3/4"	WOOD	B	WOOD	-	-						3'-0" SIDE LITE W/CLEAR, TEMPERED GLAZING
EXISTING	224	3'-0"	6'-8"	1 3/4"	WOOD	B	WOOD	-	-						3'-0" SIDE LITE W/CLEAR, TEMPERED GLAZING
EXISTING	225	3'-0"	6'-8"	1 3/4"	WOOD	B	WOOD	-	-						REMOVE & SALVAGE
EXISTING	226	3'-0"	6'-8"	1 3/4"	WOOD	B	WOOD	-	-						REPLACE EXISTING TYPE "B" WITH NEW TYPE "F"
EXISTING	227	3'-0"	6'-8"	1 3/4"	WOOD	B	WOOD	-	-						3'-0" SIDE LITE W/CLEAR, TEMPERED GLAZING
EXISTING	228	3'-0"	6'-8"	1 3/4"	WOOD	B	WOOD	-	-						REMOVE & SALVAGE
EXISTING	229	3'-0"	6'-8"	1 3/4"	WOOD	B	WOOD	-	-						REMOVE & SALVAGE
EXISTING	230	3'-0"	6'-8"	1 3/4"	WOOD	B	WOOD	-	-						
EXISTING	231	3'-0"	6'-8"	1 3/8"	WOOD	B	WOOD	-	-						POCKET DOOR (TO BE REMOVED)
EXISTING	232	3'-0"	6'-8"	1 3/8"	WOOD	B	WOOD	-	-						POCKET DOOR (TO BE REMOVED)
EXISTING	233	PR. 3'-0"	6'-8"	1 3/8"	WOOD	E	WOOD	-	-						SLIDING
EXISTING	234	NOT USED													
EXISTING	235	2'-6" VIF	6'-8"	1 3/4"	WOOD	B	WOOD	-	-						REMOVE & SALVAGE
EXISTING	236	3'-0"	6'-8"	1 3/4"	WOOD	B	WOOD	-	-						
EXISTING	237	3'-0"	6'-8"	1 3/4"	WOOD	B	METAL	-	90 MIN.						REMOVE & SALVAGE
EXISTING	238	3'-0"	6'-8"	1 3/4"	WOOD	B	METAL	-	90 MIN.						REMOVE & SALVAGE
EXISTING	239	3'-0"	6'-8"	1 3/4"	WOOD	B	WOOD	-	-						REMOVE & SALVAGE
EXISTING	240	3'-0"	6'-8"	1 3/4"	WOOD	B	WOOD	-	-						REMOVE & SALVAGE
EXISTING	241	PR. 2'-0"	6'-8"	1 3/8"	WOOD	E	WOOD	-	-						BI-FOLD
EXISTING	242	NOT USED													
EXISTING	243	2'-6" VIF	6'-8"	1 3/4"	WOOD	B	WOOD	-	-						REMOVE & SALVAGE
EXISTING	244	3'-0"	6'-8"	1 3/4"	WOOD	B	WOOD	-	-						REMOVE & SALVAGE
EXISTING	245	3'-0"	7'-0"	1 3/4"	METAL	B	METAL	F-1	90 MIN.						
EXISTING	246	3'-0"	6'-8"	1 3/4"	WOOD	B	WOOD	-	-						
EXISTING	247	3'-0"	6'-8"	1 3/4"	WOOD	B	WOOD	-	-						REMOVE & SALVAGE
EXISTING	248	3'-0"	6'-8"	1 3/4"	WOOD	B	WOOD	-	-						3'-0" SIDE LITE W/CLEAR, TEMPERED GLAZING
EXISTING	249	3'-0"	6'-8"	1 3/4"	WOOD	B	WOOD	-	-						3'-0" SIDE LITE W/CLEAR, TEMPERED GLAZING
NEW	250	PR. 2'-6"	6'-8"	1 3/4"	WOOD	D	WOOD	-	-		8/A3.1 [NOTE 7]	11/A3.1	2/A3.1 [NOTE 7]	YES	CHANGE TO MTL. FRAME, 90 MIN. RATED MTL DOORS, NOTE 7
NEW	251	3'-0"	6'-8"	1 3/4"	WOOD	B	METAL	F-1	-		7/A3.1	10/A3.1	13/A3.1 [NOTE 7]	YES	NOTE 7
NEW	252	3'-0"	6'-8"	1 3/4"	WOOD	B	METAL	F-1	-		7/A3.1	10/A3.1	13/A3.1 [NOTE 7]	YES	NOTE 7
NEW	253	3'-0"	6'-8"	1 3/4"	WOOD	B	METAL	-	-		7/A3.1	10/A3.1	12/A3.1		RELOCATED DOOR #225
NEW	254	3'-0"	6'-8"	1 3/4"	WOOD	B	METAL	F-2	-		7/A3.1	10/A3.1	12/A3.1		
NEW	255	3'-0"	6'-8"	1 3/4"	WOOD	B	METAL	F-2	-		7/A3.1	10/A3.1	12/A3.1		
NEW	256	3'-0"	6'-8"	1 3/4"	WOOD	B	METAL	F-2	-		7/A3.1	10/A3.1	12/A3.1		
NEW	257	3'-0"	6'-8"	1 3/4"	WOOD	B	METAL	F-2	-		7/A3.1	10/A3.1	12/A3.1		
NEW	258	3'-0"	6'-8"	1 3/4"	WOOD	B	METAL	F-2	-		7/A3.1	10/A3.1	12/A3.1		
NEW	259	3'-0"	6'-8"	1 3/4"	WOOD	B	METAL	F-2	-		7/A3.1	10/A3.1	12/A3.1		
NEW	260	3'-0"	6'-8"	1 3/4"	WOOD	B	METAL	F-2	-		7/A3.1	10/A3.1	12/A3.1		
NEW	261	3'-0"	6'-8"	1 3/4"	WOOD	B	METAL	F-2	-		7/A3.1	10/A3.1	12/A3.1		
NEW	262	3'-0"	6'-8"	1 3/4"	WOOD	B	METAL	F-2	-		7/A3.1	10/A3.1	12/A3.1		
NEW	263	3'-0"	6'-8"	1 3/4"	WOOD	B	METAL	F-2	-		7/A3.1	10/A3.1	12/A3.1		
NEW	264	2'-6"	6'-8"	1 3/4"	WOOD	B	METAL	F-1	-		7/A3.1	10/A3.1	13/A3.1		
NEW	265	3'-0"	6'-8"	1 3/4"	WOOD	B	METAL	F-1	-		7/A3.1	10/A3.1	12/A3.1		
NEW	266	3'-0"	6'-8"	1 3/4"	WOOD	B	METAL	F-1	-		7/A3.1	10/A3.1	12/A3.1		
NEW	267	3'-0"	6'-8"	1 3/4"	WOOD	B	METAL	F-1	-		7/A3.1	10/A3.1	12/A3.1		
NEW	268	3'-0"	6'-8"	1 3/4"	WOOD	B	METAL	F-2	-		7/A3.1	10/A3.1	12/A3.1		
NEW	269	3'-0"	6'-8"	1 3/4"	WOOD	B	METAL	F-2	-		7/A3.1	10/A3.1	12/A3.1		
NEW	270	3'-0"	6'-8"	1 3/4"	WOOD	B	METAL	F-2	-		7/A3.1	10/A3.1	12/A3.1		
NEW	271	3'-0"	6'-8"	1 3/4"	WOOD	F	METAL	F-1	-		7/A3.1	10/A3.1	12/A3.1		

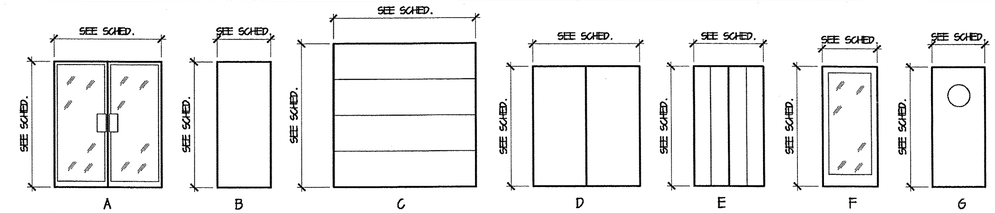

1 A3.1 DOOR ELEVATIONS 1/4"=1'-0"

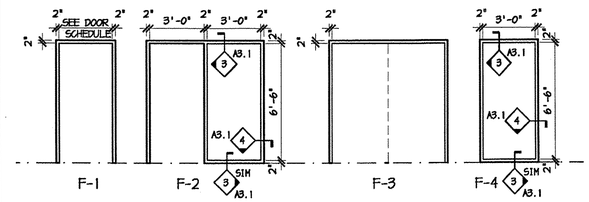

2 A3.1 METAL FRAME TYPES 1/4"=1'-0"

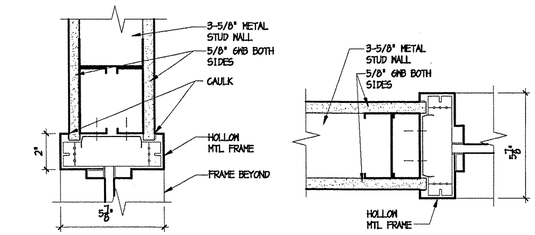

3 A3.1 INTERIOR WINDOW HEAD / SILL DETAIL 3"=1'-0"

4 A3.1 INTERIOR WINDOW JAMB DETAIL 3"=1'-0"

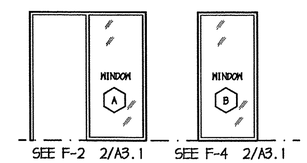

5 A3.1 WINDOW ELEV. 1/4"=1'-0"

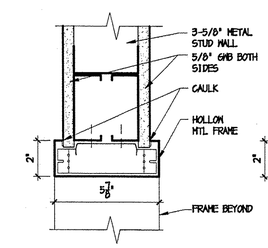

6 A3.1 HEAD DETAIL 3"=1'-0"

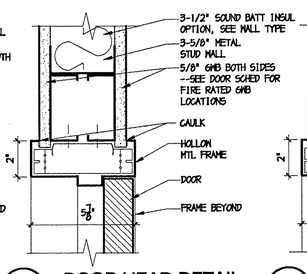

7 A3.1 DOOR HEAD DETAIL 3"=1'-0"

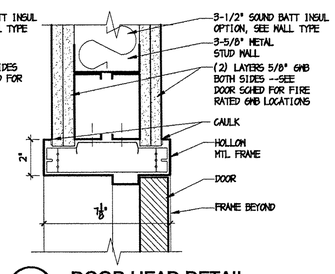

8 A3.1 DOOR HEAD DETAIL 3"=1'-0"

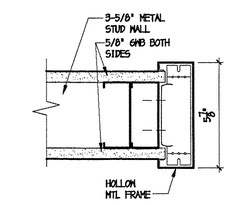

9 A3.1 JAMB DETAIL 3"=1'-0"

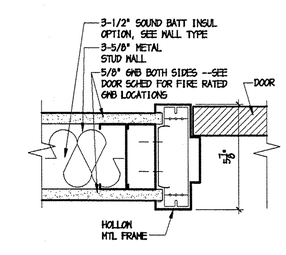

10 A3.1 DOOR JAMB DETAIL 3"=1'-0"

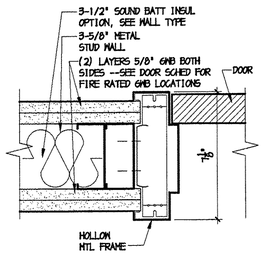

11 A3.1 DOOR JAMB DETAIL 3"=1'-0"

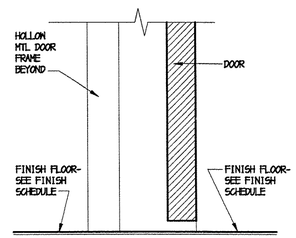

12 A3.1 DOOR SILL DETAIL 3"=1'-0"

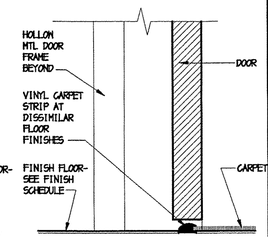

13 A3.1 DOOR SILL DETAIL 3"=1'-0"

SCHEDULE NOTES:

1. REMOVE & SALVAGE EXISTING DOOR(S) & FRAME.
2. EXISTING PANIC HARDWARE ON DOORS: 101,102,112.
3. DOORS TO HAVE PANIC HARDWARE INSTALLED (OR RETROFITTED): 108,120,125,136,139,140,218,245.
4. DOORS WITH EXISTING KEYPAD LOCK HARDWARE (BATTERY OPERATED): 104, 111 (SWITCH KEYPAD TO TRAINING ROOM SIDE OF DOOR).
5. DOORS TO HAVE NEW MECHANICAL KEYPAD LOCK HARDWARE INSTALLED: 120,125 - STAINLESS STEEL FINISH, 106,140,202,252,253 - POLISHED BRASS FINISH.
6. DOORS TO HAVE PERIMETER SECURITY CONTACT INSTALLED: 101,108,120,125,135,136,137,138,139,218,245.
7. DOORS 250,2&1 252 AT COMPUTER ROOM 239-6 TO HAVE SELF-CLOSING, GASKETED PERIMETER HARDWARE TO BECOME AIR-TIGHT FOR CLEAN AGENT EXTINGUISHING SYSTEM INSTALLED IN COMPUTER ROOM.

CRADDOCK - CUNNINGHAM ARCHITECTURAL PARTNERS, P.C.
10 NINTH STREET, LYNCHBURG, VIRGINIA 24504 434 846-8455 FAX 434 846-4434
EMAIL: INFO@CRADDOCKCUNNINGHAM.COM

RENOVATION & ALTERATIONS
CITY OF LYNCHBURG - I.T. BLDG.
3550 YOUNG PLACE - LYNCHBURG, VA 24501
PROJECT NO: 06181

COMMONWEALTH OF VIRGINIA
LYNN A. CUNNINGHAM
No. 8169
ARCHITECT

WRITTEN DIMENSIONS ON THESE DRAWINGS SHALL TAKE PRECEDENCE OVER SCALED DIMENSIONS. CONTRACTORS SHALL VERIFY AND BE RESPONSIBLE FOR, ALL DIMENSIONS AND CONDITIONS ON THE JOB AND THIS OFFICE MUST BE NOTIFIED OF ANY VARIATION FROM THE DIMENSIONS AND CONDITIONS SHOWN BY THESE DRAWINGS.

DESIGNED: SPA
DRAWN: SPA/RTJ
CHECKED: SPA
DATE: 02-23-07
REVISIONS:

DOOR & WINDOW SCHEDULE, ELEVATIONS & DETAILS

A3.1

E:\Municipal\City IT Building\Drawing\CD\Sheets\A3.1.dwg, A3.1, 2/27/2007 4:54:00 PM

FINISH SCHEDULE

Tag	Space	Floor	Base	North Wall	South Wall	East Wall	West Wall	Ceiling	Ceiling Height	Remarks
LEVEL ONE										
101	ENTRY VESTIBULE	VCT	VINYL	EXIST.	EXIST.	EXIST.	EXIST.	EXIST.	EXIST.	
102	CLOSET	VCT	VINYL	EXIST.	EXIST.	EXIST.	EXIST.	EXIST.	EXIST.	
103	ENTRY LOBBY	CARPET	VINYL	EXIST.	PTD	PTD	EXIST.	EXIST.	EXIST.	
104	CONFERENCE RM.	EXIST.	EXIST.	PTD	PTD	PTD	PTD	EXIST.	EXIST.	
105	TRAINING RM. SUPPORT	EXIST.	EXIST.	EXIST.	EXIST.	EXIST.	EXIST.	EXIST.	EXIST.	
106	CLOSET	EXIST.	EXIST.	EXIST.	EXIST.	EXIST.	EXIST.	EXIST.	EXIST.	
107	TRAINING ROOM	EXIST.	EXIST.	EXIST.	EXIST.	EXIST.	EXIST.	EXIST.	EXIST.	
108	WOMEN'S TOILET	PTD	VINYL	EXIST.	EXIST.	EXIST.	EXIST.	EXIST.	EXIST.	EPOXY FLOOR PAINT, SEE SPECS., NOTE 12
109	MEN'S TOILET	PTD	VINYL	EXIST.	EXIST.	EXIST.	EXIST.	EXIST.	EXIST.	EPOXY FLOOR PAINT, SEE SPECS., NOTE 12
110	CORRIDOR	CARPET	VINYL	EXIST.	EXIST.	EXIST.	EXIST.	EXIST.	EXIST.	
111	CONFERENCE ROOM	EXIST.	EXIST.	EXIST.	EXIST.	EXIST.	EXIST.	EXIST.	EXIST.	
112	OFFICE	EXIST.	EXIST.	EXIST.	EXIST.	EXIST.	EXIST.	EXIST.	EXIST.	
113	MEN'S TOILET	PTD	VINYL	PTD	PTD	PTD	PTD	EXIST.	EXIST.	EPOXY FLOOR PAINT, EPOXY WALL PAINT, SEE SPECS.
114	WOMEN'S TOILET	PTD	VINYL	PTD	PTD	PTD	PTD	EXIST.	EXIST.	EPOXY FLOOR PAINT, EPOXY WALL PAINT, SEE SPECS.
115	OFFICE	EXIST.	EXIST.	EXIST.	EXIST.	EXIST.	EXIST.	EXIST.	EXIST.	
116	OFFICE	EXIST.	EXIST.	PTD	PTD	PTD	PTD	EXIST.	EXIST.	
117	CAFETERIA	EXIST.	EXIST, VINYL	EXIST, PTD	EXIST.	EXIST.	PTD	EXIST.	EXIST.	ALTERNATE NEW WALLS TO BE PTD GWB W/VINYL BASE
117-A	OFFICE	CARPET	VINYL	PTD GWB	PTD GWB	PTD GWB	PTD GWB	ATC	MATCH EXIST.	
117-B	OFFICE	CARPET	VINYL	PTD GWB	PTD GWB	PTD GWB	PTD GWB	ATC	MATCH EXIST.	
118	MECHANICAL	EXIST.	EXIST.	EXIST.	EXIST.	EXIST.	EXIST.	EXIST.	EXIST.	
119	UTILITY ROOM	EXIST.	EXIST.	EXIST.	EXIST.	EXIST.	EXIST.	EXIST.	EXIST.	
120	FITNESS ROOM	CARPET	VINYL	PTD GWB	PTD	PTD GWB	PTD	ATC	9'-9"(8'-0"MIN	LEVEL FLOOR PRIOR TO CARPET INSTALLATION, NOTE 15
121	TEAM ROOM	CARPET	VINYL	PTD	PTD GWB	PTD GWB	PTD, PTD GWB	ATC	9'-9"(8'-0"MIN	LEVEL FLOOR PRIOR TO CARPET INSTALLATION, NOTE 15
122	MECHANICAL	EXIST.	EXIST.	EXIST.	EXIST.	EXIST.	EXIST.	EXIST.	EXIST.	EXPANDED MECH. TO MATCH EXIST. MECH. FINISHES
123-A	OPEN OFFICE SPACE	CARPET	VINYL	PTD	PTD	PTD	PTD	ATC	MATCH EXIST.	ALTERNATE NEW WALLS TO BE PTD GWB W/VINYL BASE
123-B	OFFICE	CARPET	VINYL	PTD GWB	PTD GWB	PTD GWB	PTD GWB	ATC	8'-0"MIN.	
123-C	OFFICE	CARPET	VINYL	PTD GWB	PTD GWB	PTD GWB	PTD GWB	ATC	8'-0"MIN.	
123-D	OFFICE	CARPET	VINYL	PTD GWB	PTD GWB	PTD GWB	PTD GWB	ATC	8'-0"MIN.	
124	OFFICE	EXIST.	EXIST.	EXIST.	EXIST.	EXIST.	EXIST.	EXIST.	EXIST.	
125	OFFICE	EXIST.	EXIST.	PTD	PTD	PTD	PTD	EXIST.	EXIST.	
126	CLOSET	EXIST.	EXIST.	EXIST.	EXIST.	EXIST.	EXIST.	EXIST.	EXIST.	
127	CLOSET	EXIST.	EXIST.	EXIST.	EXIST.	EXIST.	EXIST.	EXIST.	EXIST.	
128	RECEIVING	EXIST.	EXIST.	EXIST.	EXIST.	EXIST.	EXIST.	EXIST.	EXIST.	
129	OFFICE SUPPORT	CARPET	VINYL	EXIST.	EXIST.	EXIST.	EXIST.	EXIST.	EXIST.	
130	TOILET	EXIST.	EXIST.	EXIST.	EXIST.	EXIST.	EXIST.	EXIST.	EXIST.	
131	UNFIN. STOR. SPACE	EXIST.	EXIST.	EXIST.	EXIST.	EXIST.	EXIST.	EXIST.	EXIST.	
132	FUTURE OFF. EXPANSION	CARPET	VINYL	EXIST.	EXIST.	EXIST.	EXIST.	EXIST.	EXIST.	ALT.NEW WALLS TO BE PTD GWB W/VINYL BASE. NOTE 13
LEVEL TWO										
201	RECEPTION	CARPET	VINYL	PTD	PTD GWB	PTD, PTD GWB	PTD GWB	ATC	MATCH EXIST.	
202	CORRIDOR	EXIST, CARPET	EXIST, VINYL	EXIST.	EXIST.	EXIST.	EXIST.	EXIST.	EXIST.	NOTE 14
203	CONFERENCE ROOM	EXIST, CARPET	EXIST, VINYL	EXIST.	EXIST.	EXIST.	EXIST.	EXIST.	EXIST.	
204	CLOSET	EXIST, CARPET	EXIST, VINYL	EXIST.	EXIST.	EXIST.	EXIST.	EXIST.	EXIST.	
205	TOILET	PTD	VINYL	EXIST.	EXIST.	EXIST.	EXIST.	EXIST.	EXIST.	EPOXY FLOOR PAINT, SEE SPECS.
206	OFFICE	EXIST.	EXIST.	EXIST.	EXIST.	EXIST.	EXIST.	EXIST.	EXIST.	
207	OFFICE	EXIST.	EXIST.	EXIST.	EXIST.	EXIST.	EXIST.	EXIST.	EXIST.	
208	MECHANICAL	EXIST.	EXIST.	EXIST.	EXIST.	EXIST.	EXIST.	EXIST.	EXIST.	
209	OFFICE SUPPORT	CARPET	VINYL	EXIST.	EXIST.	EXIST.	EXIST.	EXIST.	EXIST.	
210	OFFICE	CARPET	VINYL	EXIST.	EXIST.	EXIST.	EXIST.	EXIST.	EXIST.	
211	WOMEN'S TOILET	PTD	VINYL	PTD	PTD	PTD	PTD	EXIST.	EXIST.	EPOXY FLOOR PAINT, EPOXY WALL PAINT, SEE SPECS.
212	MEN'S TOILET	PTD	VINYL	PTD	PTD	PTD	PTD	EXIST.	EXIST.	EPOXY FLOOR PAINT, EPOXY WALL PAINT, SEE SPECS.
213	OFFICE	EXIST.	EXIST.	EXIST.	EXIST.	EXIST.	EXIST.	EXIST.	EXIST.	
214	OFFICE	EXIST.	EXIST.	EXIST.	EXIST.	EXIST.	EXIST.	EXIST.	EXIST.	
215	OFFICE	EXIST.	EXIST.	EXIST.	EXIST.	EXIST.	EXIST.	EXIST.	EXIST.	
216	TEAM ROOM	EXIST.	EXIST.	EXIST.	EXIST.	EXIST.	EXIST.	EXIST.	EXIST.	
217	OFFICE	EXIST.	EXIST.	PTD	PTD	PTD	PTD, PTD GWB	EXIST.	EXIST.	NEW WALL TO BE PTD GWB W/VINYL BASE
218-A	OFFICE	EXIST.	EXIST.	EXIST.	EXIST.	EXIST.	PTD GWB	EXIST.	EXIST.	NEW WALL TO BE PTD GWB W/VINYL BASE
218-B	CORRIDOR	CARPET	VINYL	PTD	PTD	PTD GWB	PTD	ATC	MATCH EXIST.	
219	OFFICE	EXIST.	EXIST.	EXIST.	EXIST.	EXIST.	EXIST.	EXIST.	EXIST.	
220	OFFICE	EXIST.	EXIST.	EXIST.	EXIST.	EXIST.	EXIST.	EXIST.	EXIST.	
221-A	OFFICE	CARPET	VINYL	PTD	PTD	PTD	PTD	ATC	EXIST.	
221-B	OFFICE	CARPET	VINYL	PTD	PTD	PTD	PTD	ATC	EXIST.	NEW WALLS TO BE PTD GWB W/VINYL BASE
222	FILING	CARPET	VINYL	PTD	PTD	PTD	PTD	EXIST.	EXIST.	NEW WALLS TO BE PTD GWB W/VINYL BASE
223	OFFICE	CARPET	VINYL	PTD	PTD	PTD	PTD	EXIST.	EXIST.	NEW WALLS TO BE PTD GWB W/VINYL BASE
224	OFFICE	EXIST.	EXIST.	EXIST.	EXIST.	EXIST.	EXIST.	EXIST.	EXIST.	
225-A	OFFICE	EXIST.	EXIST.	EXIST.	EXIST.	EXIST.	PTD GWB	ATC	EXIST.	NEW WALLS TO BE PTD GWB W/VINYL BASE
225-B	OFFICE	EXIST.	EXIST.	EXIST.	EXIST.	PTD GWB	EXIST.	ATC	EXIST.	NEW WALLS TO BE PTD GWB W/VINYL BASE
226-A	KITCHENETTE	VCT	VINYL	PTD GWB	PTD	PTD	PTD	ATC	EXIST.	
226-B	OFFICE	EXIST.	EXIST.	PTD	PTD GWB	PTD	PTD	ATC	EXIST.	NEW WALLS TO BE PTD GWB W/VINYL BASE
227	SUPPLY CLOSET	VCT	VINYL	PTD	PTD GWB	PTD	PTD	ATC	EXIST.	NEW WALLS TO BE PTD GWB W/VINYL BASE
228	CLOSET	EXIST.	EXIST.	PTD	PTD	PTD	PTD	EXIST.	EXIST.	
229	MECHANICAL	EXIST.	EXIST.	EXIST.	EXIST.	EXIST.	EXIST.	EXIST.	EXIST.	
230-A	OFFICE	CARPET	VINYL	PTD GWB	PTD	PTD	PTD GWB	ATC	EXIST.	
230-B	OFFICE	CARPET	VINYL	PTD GWB	PTD	PTD GWB	PTD GWB	ATC	EXIST.	
230-C	OFFICE	CARPET	VINYL	PTD GWB	PTD	PTD GWB	PTD	ATC	EXIST.	
231	CLOSET	CARPET	VINYL	PTD GWB	PTD	PTD GWB	PTD	ATC	EXIST.	
232	SUPPORT	CARPET	VINYL	PTD GWB	PTD	PTD GWB	PTD	ATC	EXIST.	
233	TOILET	PTD	VINYL	PTD GWB	PTD	PTD GWB	PTD	ATC	EXIST.	EPOXY FLOOR PAINT, EPOXY WALL PAINT, SEE SPECS.
234-A	CORRIDOR	CARPET	VINYL	PTD, PTD GWB	PTD GWB	PTD	PTD	ATC	EXIST.	
234-B	OFFICE	CARPET	VINYL	PTD GWB	PTD	PTD	PTD GWB	ATC	EXIST.	
234-C	OFFICE	CARPET	VINYL	PTD GWB	PTD	PTD GWB	PTD GWB	ATC	EXIST.	
234-D	OFFICE	CARPET	VINYL	PTD GWB	PTD	PTD GWB	PTD	ATC	EXIST.	
235-A	INTERNS	CARPET	VINYL	PTD	PTD GWB	PTD	PTD GWB	ATC	SEE REMARKS	MATCH CORRIDOR 202 CLG. HT. (8'-0" MIN.)
235-B	UTILITY CLOSET	EXIST.	-	PTD GWB	EXIST.	PTD GWB	EXIST.	EXIST.	EXIST.	
235-C	OFFICE	CARPET	VINYL	PTD GWB	PTD GWB	PTD GWB	PTD GWB	ATC	SEE REMARKS	MATCH CORRIDOR 202 CLG. HT. (8'-0" MIN.)
235-D	OFFICE	CARPET	VINYL	PTD GWB	PTD GWB	PTD GWB	PTD GWB	ATC	SEE REMARKS	MATCH CORRIDOR 202 CLG. HT. (8'-0" MIN.)
235-E	OFFICE	CARPET	VINYL	PTD GWB	PTD GWB	PTD GWB	PTD GWB	ATC	SEE REMARKS	MATCH CORRIDOR 202 CLG. HT. (8'-0" MIN.)
235-F	OFFICE	CARPET	VINYL	PTD GWB	PTD GWB	PTD GWB	PTD GWB	ATC	SEE REMARKS	MATCH CORRIDOR 202 CLG. HT. (8'-0" MIN.)
235-G	COMPUTER ROOM	ANTI-STATIC VCT	VINYL	PTD, PTD GWB	PTD, PTD GWB	PTD, PTD GWB	PTD	EXIST.	VARIES	NOTE 10
236	CLOSET	EXIST.	EXIST.	EXIST.	EXIST.	EXIST.	EXIST.	EXIST.	EXIST.	
237	CLOSET (DEMOLISHED)	ANTI-STATIC VCT	VINYL	-	PTD	-	-	-	-	
238	OFFICE	ANTI-STATIC VCT	VINYL	EXIST.	EXIST.	EXIST.	EXIST.	EXIST.	EXIST.	
239	OFFICE	ANTI-STATIC VCT	VINYL	EXIST.	EXIST.	EXIST.	EXIST.	EXIST.	EXIST.	
240	MEZZANINE	EXIST.	EXIST.	-	EXIST.	EXIST.	-	-	-	
MISCELLANEOUS										
501	STAIR	EXIST.	EXIST.	EXIST.	EXIST.	EXIST.	EXIST.	EXIST.	EXIST.	
502	STAIR	EXIST. VCT	EXIST, VINYL	EXIST, PTD GWB	EXIST, PTD GWB	EXIST, PTD GWB	EXIST, PTD GWB	EXIST. ATC	VARIES	
503	(EGRESS) STAIR	EXIST.	-	-	-	-	-	EXIST.	EXIST.	
504	(EGRESS) STAIR	EXIST.	-	-	-	-	-	EXIST.	EXIST.	
505	STAIR	EXIST.	EXIST.	-	-	-	EXIST.	EXIST.	EXIST.	

FINISH NOTES:

1. VERIFY VCT AND ELECTROSTATIC DISCHARGE (ANTI-STATIC) TILE FLOOR SELECTION W/ OWNER. SEE SPECS.
2. VERIFY CARPET SELECTION W/ OWNER. SEE SPEC.
3. INSTALL SIGNAGE PER A.D.A. REQUIREMENTS FOR ACCESSIBILITY COMPLIANCE. SEE 3/A3.2.
4. ALL PAINTED WALLS TO RECEIVE ONE COAT PRIMER AND TWO COATS FINISH PAINT. COLOR AS SELECTED BY OWNER.
5. PROVIDE STANDARD CORNER BEADS ON ALL 90-DEGREE GWB INTERSECTIONS. CONTRACTOR TO REPAIR EXIST. GWB AS REQ. PRIOR TO PAINTING.
6. INSTALL 4" VINYL BASE MOLDING TO MATCH EXISTING.
7. PROVIDE ALL NECESSARY BLOCKING FOR ALL CABINETS AND ADA ACCESSORIES.
8. EXISTING CARPET ON LEVELS ONE AND TWO THAT IS TO REMAIN SHALL BE CLEANED.
9. NEW 2'x2' ACOUSTICAL TILE CEILING TO BE INSTALLED PER FINISH SCHEDULE AT HEIGHTS TO MATCH EXISTING ADJACENT SPACES.
10. PARTITION WALLS OF COMPUTER ROOM 235-G (AND NORTH AND WEST WALLS OF OFFICES 238 & 239) TO BE CAULKED, TOP AND BOTTOM, BOTH SIDES, SO THAT THE COMPUTER ROOM REMAINS AIRTIGHT DURING FUNCTIONING OF FIRE SUPPRESSION SYSTEM. DOOR OPENINGS IN COMPUTER ROOM WALLS TO HAVE SEALS W/ GASKET AND AUTOMATIC DOOR BOTTOM. SEE SPEC.
11. NEW WALLS TO BE CONSTRUCTED 1'-0" HIGHER THAN EXISTING ACOUSTICAL TILE CEILING, TYP., TO MATCH EXISTING, EXCEPT WHEN NEW WALLS ARE INFILL OF AN EXISTING WALL, OR AS OTHERWISE NOTED.
12. REMOVE ENTRY CARPET, ADD THRESHOLD AT NEW DOOR.
13. REMOVE EXISTING CARPET & FIXTURES, PATCH FLOOR AS NECESSARY PRIOR TO INSTALLATION OF NEW CARPET.
14. NEW WALLS TO BE PTD GWB W/ VINYL BASE. PAINT ENTIRE EAST WALL ADJACENT TO ROOM #217. SEE FINISH PLAN FOR NEW CARPET AREA.
15. FLOOR LEVELING AT EXISTING SLOPED GARAGE FLOOR TO BE ACCOMPLISHED WITH GYP CRETE FLOOR PRODUCT OR EQUAL.
16. TOILET ROOM WALLS TO BE PAINTED WITH A WATERBASED EPOXY, SEE SPECS.
17. TOILET ROOM FLOORS TO BE COATED WITH A FLUID-APPLIED, WATERBASED EPOXY FLOOR PRODUCT--SEE SPECS.

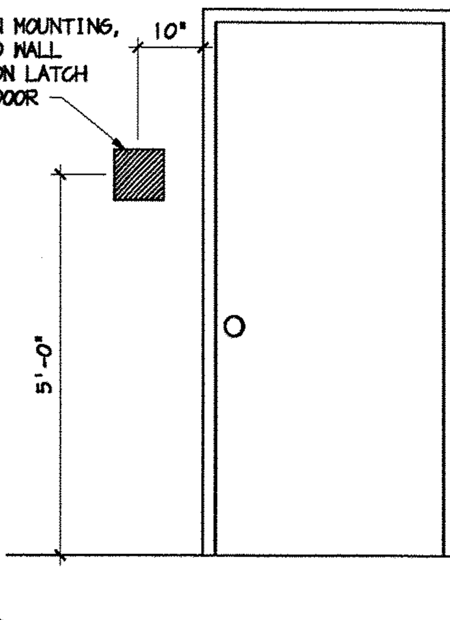

3 / A3.2 SIGNAGE LOCATION
1/2"=1'-0"

FLOOR FINISH HATCH KEY

- EXISTING
- CARPET
- VINYL COMPOSITION TILE (VCT)
- ANTI-STATIC VINYL COMPOSITION TILE (ELECTROSTATIC DISCHARGE FLOORING--ESD TILE)
- EPOXY PAINT

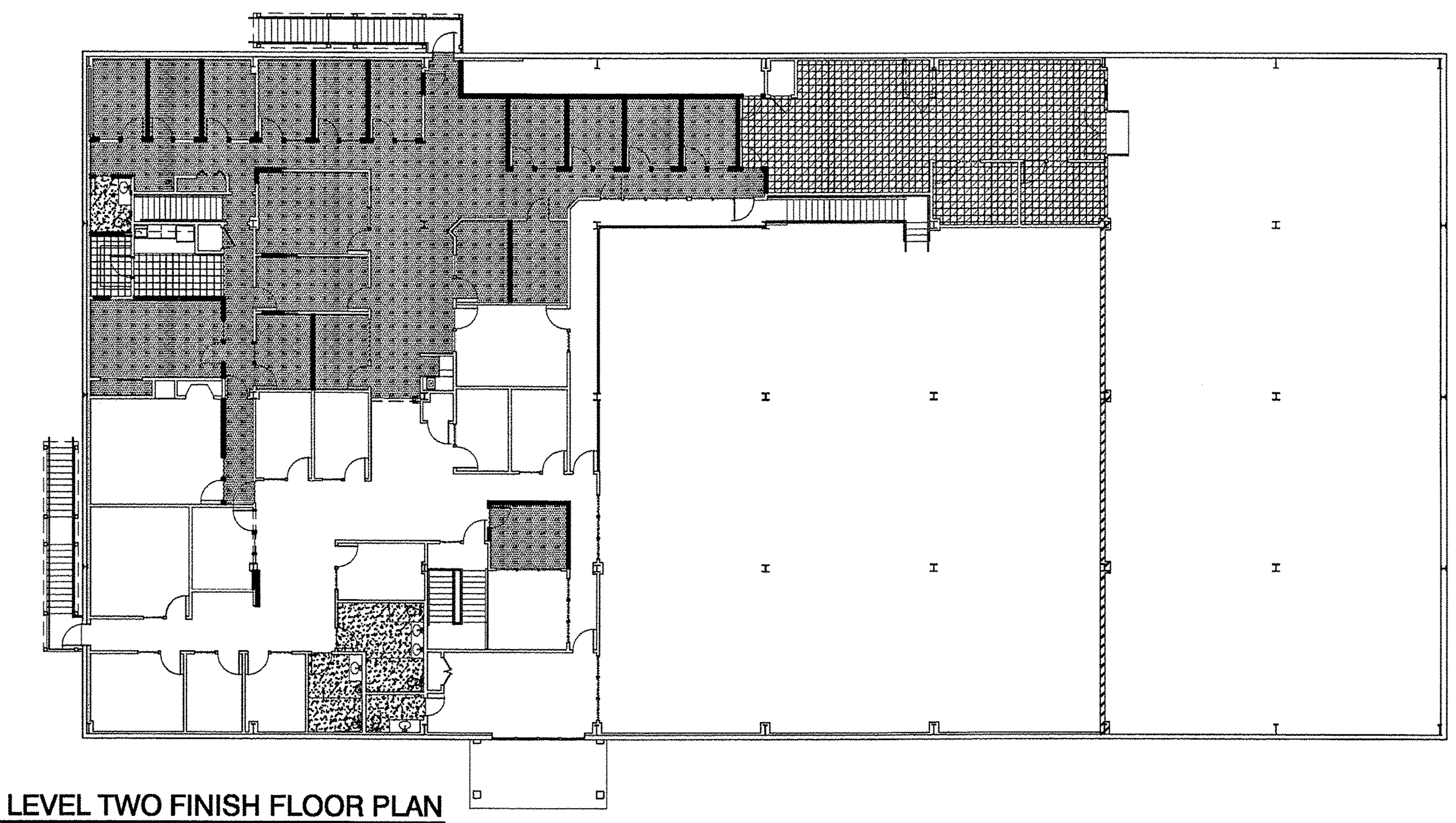

2 / A3.2 LEVEL TWO FINISH FLOOR PLAN
1/16"=1'-0"

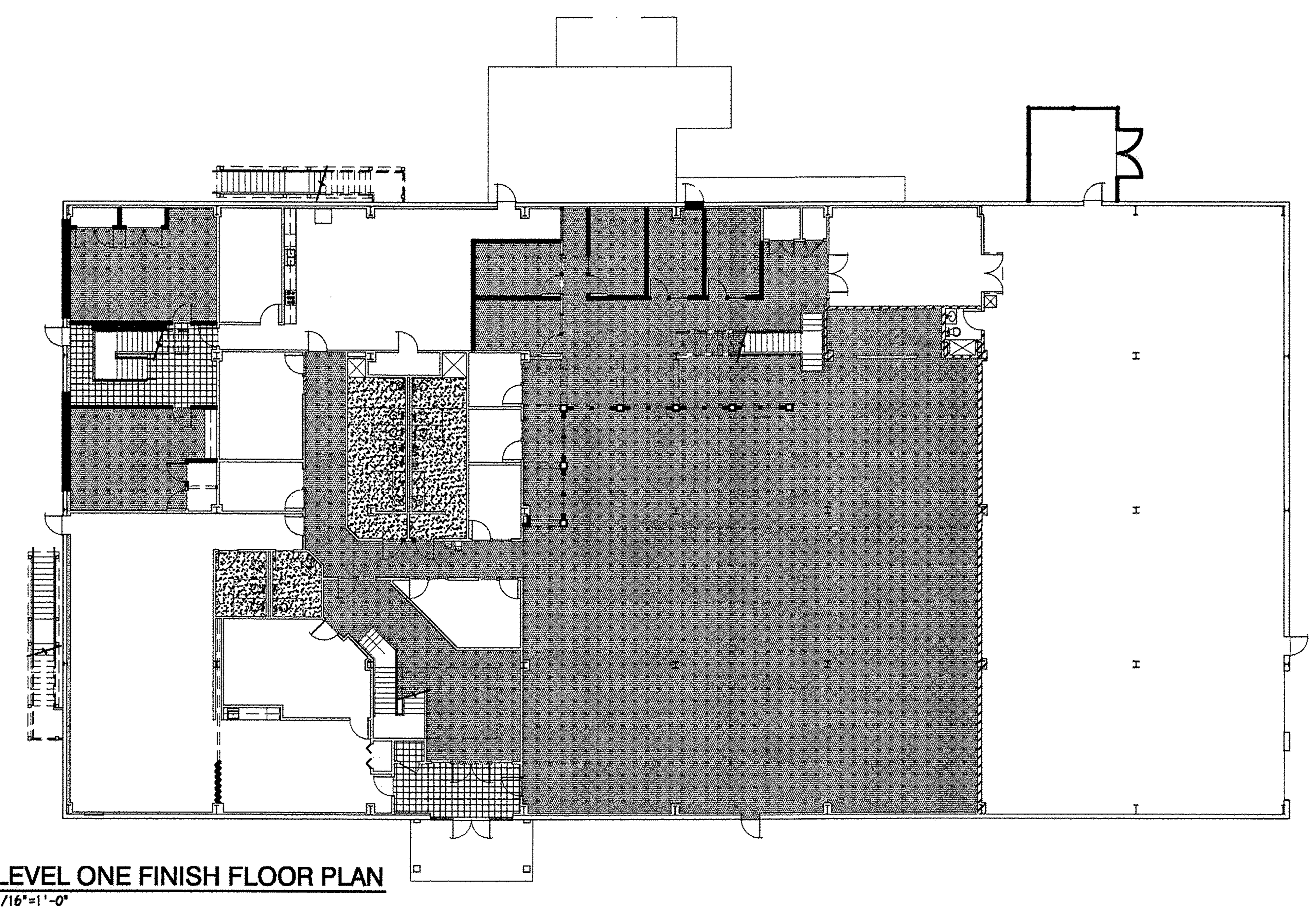

1 / A3.2 LEVEL ONE FINISH FLOOR PLAN
1/16"=1'-0"

CRADDOCK - CUNNINGHAM
ARCHITECTURAL PARTNERS, P.C.
10 NINTH STREET, LYNCHBURG, VIRGINIA 24504 434 846-8456 FAX 434 846-4534
EMAIL: INFO@CRADDOCKCUNNINGHAM.COM

RENOVATION & ALTERATIONS
CITY OF LYNCHBURG - I.T. BLDG.
3550 YOUNG PLACE - LYNCHBURG, VA 24501
PROJECT NO: 06181

COMMONWEALTH OF VIRGINIA
LYNN A. CUNNINGHAM
No. 8169
ARCHITECT

WRITTEN DIMENSIONS ON THESE DRAWINGS SHALL TAKE PRECEDENCE OVER SCALED DIMENSIONS. CONTRACTORS SHALL VERIFY AND BE RESPONSIBLE FOR, ALL DIMENSIONS AND CONDITIONS ON THE JOB AND THIS OFFICE MUST BE NOTIFIED OF ANY VARIATION FROM THE DIMENSIONS AND CONDITIONS SHOWN BY THESE DRAWINGS.

DESIGNED: SPA
DRAWN: SPA/RTJ
CHECKED: SPA
DATE: 02-23-07
REVISIONS:

FINISH SCHEDULE

A3.2

E:\Municipal\City IT Building\Drawing\CD\Sheets\A3.2.dwg, A3.2, 2/27/2007 4:57:14 PM

MECHANICAL LEGEND

SYMBOLS

SECTION DESIGNATION
A / H-1 — UPPER: SECTION DESIGNATION
LOWER: SECTION DRAWING NUMBER

DETAIL DESIGNATION
12 / H-1 — UPPER: DETAIL DESIGNATION
LOWER: DETAIL DRAWING NUMBER

SCHEDULED AIR DISTRIBUTION DEVICE DESIGNATION
A / 1 — UPPER-DIFFUSER, GRILLE OR REGISTER DESIGNATION
LOWER-AIR QUANTITY - CFM

SCHEDULED EQUIPMENT DESIGNATION
AC / 1 — UPPER: EQUIPMENT DESIGNATION
LOWER: EQUIPMENT NUMBER

AHU / 1 — AIR HANDLING UNIT

EDH / 1 — ELECTRIC DUCT HEATER

H / 1 — HUMIDIFIER

CD / 100 — CEILING DIFFUSER

RR / 100 — RETURN REGISTER

SR / 100 — SUPPLY REGISTER

WL / 1 — WALL LOUVER

T — THERMOSTAT

H — HUMIDISTAT

SHEET METAL

SUPPLY DUCT UP

SUPPLY DUCT DOWN

EXHAUST OUTSIDE AIR OR RETURN DUCT UP

EXHAUST OUTSIDE AIR OR RETURN DUCT DOWN

FLEXIBLE CONNECTION

LINED DUCT (2 line)

LINED DUCT (1 line)

DUCT WITH TURNING VANES (OR)

ROUND DUCT UP

ROUND DUCT DOWN

SPIN-IN FITTING WITH DAMPER

REDUCER

SQUARE TO ROUND

FLEXIBLE DUCT

ROUND DUCT

MOTORIZED DAMPER (RUSKIN CD-60)

MANUAL VOLUME DAMPER

FIRE DAMPER (RUSKIN D1BD20)

CEILING DIFFUSER

RETURN OR RELIEF AIR REGISTER

DENOTES EXISTING EQUIPMENT

DENOTES EXISTING EQUIPMENT TO BE REMOVED

DENOTES NEW EQUIPMENT

POINT OF CONNECTION (NEW TO EXISTING)

PIPING

C — CONDENSATE

P — PROPANE

BALL VALVE (OR)

CAPPED PIPE

DIRECTION OF PITCH

RISER

DROP

ABBREVIATIONS

ABV	ABOVE
AFF	ABOVE FINISHED FLOOR
BTUH	BRITISH THERMAL UNIT PER HOUR
CFM	CUBIC FEET PER MINUTE
DB	DRY BULB
DN	DOWN
DX	DIRECT EXPANSION
EAT	ENTERING AIR TEMPERATURE
ENT.	ENTERING
ETR	EXISTING TO REMAIN
FD	FIRE DAMPER
FPM	FEET PER MINUTE
HP	HORSEPOWER
LAT	LEAVING AIR TEMPERATURE
LVG.	LEAVING
MAX.	MAXIMUM
MBH	THOUSAND BTU PER HOUR
MFR.	MANUFACTURER
MIN.	MINIMUM
MOD	MOTOR OPERATED DAMPER
MVD	MANUAL VOLUME DAMPER
NOM	NOMINAL
NTS	NOT TO SCALE
OA	OUTSIDE AIR
PD	PRESSURE DROP
RA	RETURN AIR
RPM	REVOLUTIONS PER MINUTE
SA	SUPPLY AIR
SP	STATIC PRESSURE (INCHES OF WATER)
TYP.	TYPICAL
WB	WET BULB TEMPERATURE, DEG. °F
WL	WALL LOUVER
VAV	VARIABLE AIR VOLUME

GENERAL NOTES

1. WHERE DUCTWORK, PIPING, OR ANY OTHER MECHANICAL EQUIPMENT IS INSTALLED ABOVE THE CEILING STRUCTURE, SUFFICIENT CLEARANCE SHALL BE PROVIDED BELOW ALL LOW POINTS OF THIS EQUIPMENT FOR THE INSTALLATION OF THE FINISHED CEILING AND ITS STRUCTURE AND ALL CEILING-MOUNTED EQUIPMENT INCLUDING CEILING-MOUNTED MECHANICAL EQUIPMENT, LIGHT FIXTURES, PLUMBING LINES, SPRINKLER HEADS, ETC. CLEARANCES REQUIRED FOR THE INSTALLATION OF THIS CEILING-MOUNTED EQUIPMENT SHALL BE VERIFIED AND COORDINATED WITH THE GENERAL CONTRACTOR AND ALL INVOLVED SUBCONTRACTORS BEFORE INSTALLING THE MECHANICAL EQUIPMENT.

2. WHERE SPACE IS LIMITED, ROUTES AND CLEARANCES AND INSTALLATION PROCEDURES FOR DUCTWORK, PIPING, VALVES, AND OTHER MECHANICAL EQUIPMENT SHALL BE VERIFIED AND COORDINATED WITH OTHER WORK BEFORE EQUIPMENT IS INSTALLED.

3. ALL STRUCTURAL STEEL AND OTHER MATERIALS REQUIRED FOR OVERHEAD-SUSPENDED MECHANICAL EQUIPMENT SHALL BE PROVIDED BY MECHANICAL CONTRACTOR UNLESS DETAILED ON STRUCTURAL DRAWINGS. ALL NECESSARY REINFORCING IN BUILDING STRUCTURE SHALL BE PROVIDED BY GENERAL CONTRACTOR.

4. MOUNT WALL SENSORS WITH SET POINT ADJUSTMENT 5'-0" ABOVE FINISHED FLOOR.

5. IF ANY EQUIPMENT OTHER THAN THAT SHOWN OR SPECIFIED IS FURNISHED, THE CONTRACTOR SHALL VERIFY THAT THE EQUIPMENT CAN BE INSTALLED IN THE SPACE AVAILABLE, INCLUDING PASSAGE THROUGH DOORS AND ACCESS DOORS AND ACCESS TO THOSE PARTS OF THE EQUIPMENT REQUIRING SERVICE.

6. ALL DUCTWORK AND PIPING SHALL BE LOCATED ABOVE NEW OR EXISTING CEILING UNLESS NOTED OTHERWISE.

7. OFFSET DUCTS AND PIPING WHERE NECESSARY TO CLEAR OTHER WORK SUCH AS BEAMS, PIPES, ELECT., ETC., COORDINATE DUCTWORK INSTALLATION WITH WORK OF OTHER TRADES TO AVOID SPACE CONFLICTS.

8. ALL CEILING-MOUNTED DIFFUSERS AND GRILLES IN FURRED CEILING SHALL BE SYMMETRICALLY LOCATED WITH RESPECT TO LIGHTING FIXTURES. DO NOT SCALE DRAWINGS FOR LOCATIONS. COORDINATE EXACT LOCATIONS WITH ELECTRICAL CONTRACTOR.

9. OUTSIDE AIR MOD'S SHALL BE POWERED FROM THE BRANCH CIRCUIT SERVING THE ASSOCIATED FURNACE OR AIR HANDLING UNIT.

10. UNLESS NOTED OTHERWISE, THE CONTRACTOR SHALL SIZE NEW DUCTWORK AS FOLLOWS:

MAIN SUPPLY DUCTS	0.1"wg/100' EQUIVALENT FRICTION
BRANCH SUPPLY DUCTS TO AIR OUTLETS	500 ft/min DUCT VELOCITY OR LESS
RETURN/OUTSIDE AIR DUCTS	0.08"wg/100' EQUIVALENT FRICTION.

11. ROUTE AND CONNECT AHU-F COMBUSTION AIR AND EXHAUST USING WALL TERMINATION EQUIVALENT TO EXISTING VENT TERMINATORS AND IN COMPLIANCE WITH ALL MFRS' RECOMMENDATIONS. PROVIDE GAS COCK AT FURNACE FOR ISOLATION.

12. REBALANCE EXISTING DIFFUSERS AND REGISTERS TO ACHIEVE THE FLOW RATES INDICATED ON PLANS. PROVIDE DAMPERS IN DUCT SYSTEM AS NECESSARY.

AHU-C/CU-CA/CU-CB/EDH-C - SEQUENCE OF OPERATION

OCCUPIED MODE:

WHENEVER SYSTEM IS IN OCCUPIED MODE. PROGRAMMABLE CONTROL SHALL START AHU FAN.

IF SPACE TEMPERATURE AS SENSED BY SPACE TEMPERATURE SENSOR IS BELOW THE OCCUPIED SETPOINT, CONTROLS SHALL ENABLE AND MODULATE EDH-C HEATING MODE TO MAINTAIN 72'F TEMPERATURE (ADJUSTABLE).
IF SPACE TEMPERATURE AS SENSED BY SPACE TEMPERATURE SENSOR IS ABOVE THE OCCUPIED SETPOINT, CONTROLS SHALL ENABLE AND STAGE CONDENSING UNIT COOLING MODE IN ORDER A THEN B TO MAINTAIN SPACE TEMPERATURE.

UNOCCUPIED MODE:

WHEN SYSTEM SWITCHES TO UNOCCUPIED MODE, CONTROLS SHALL STOP AHU FAN AND SHALL INDEX THE OUTSIDE AIR DAMPER TO ITS FULLY CLOSED POSITION.

IF SPACE TEMPERATURE FALLS BELOW THE UNOCCUPIED SETPOINT, CONTROLS SHALL START AHU FAN AND SHALL ENABLE EDH-C TO MAINTAIN SPACE TEMPERATURE. OUTSIDE AIR DAMPER SHALL REMAIN IN UNOCCUPIED MODE POSITION.

IF SPACE TEMPERATURE AS SENSED BY TEMPERATURE SENSOR RISES ABOVE THE UNOCCUPIED SETPOINT, CONTROLS SHALL COMMAND AHU FAN TO RUN AND SHALL ENABLE AND STAGE CONDENSING UNIT COOLING MODE AS BEFORE TO MAINTAIN SPACE TEMPERATURE. OUTSIDE AIR DAMPER SHALL REMAIN IN UNOCCUPIED MODE POSITION.

SPACE OCCUPANTS MAY OVERRIDE UNOCCUPIED MODE BY DEPRESSING THE NSO PUSHBUTTON ON SPACE TEMPERATURE SENSOR. WHEN DEPRESSED, NSO DEVICE SHALL CAUSE AIR HANDLING UNIT SERVING THE SPACE TO CHANGE TO ITS OCCUPIED MODE. CONTROL SHALL CHANGE BACK TO UNOCCUPIED MODE AFTER ADJUSTABLE TIME PERIOD. INITIAL SETPOINT = 4 HOURS.

ALL MODES:

IF SMOKE IS SENSED BY EITHER THE SUPPLY OR RETURN AIR DUCT SMOKE DETECTORS, THE CONTROLS SHALL STOP AHU AND RETURN FANS BY HARDWIRE CONTROL AND IMMEDIATELY CLOSE OUTSIDE AIR DAMPER THROUGH SOFTWARE INTERLOCK.

IF SPACE RELATIVE HUMIDITY AS SENSED BY SPACE HUMIDITY SENSOR RISES ABOVE 55% RELATIVE HUMIDITY (ADJUSTABLE), CONTROLS SHALL ENABLE AHU FAN, CU-CA AND MODULATE EDH-C TO MAINTAIN LEAVING AIR TEMPERATURE AT UNOCCUPIED SPACE TEMPERATURE SETPOINT. ON A FALL IN SPACE RELATIVE HUMIDITY OF 10% (ADJUSTABLE), CONTROLS SHALL DISABLE CU-CA, EDH-C AND STOP AHU FAN.

MISCELLANEOUS EQUIPMENT SCHEDULE

MARK	DESCRIPTION
EDH / C	ELECTRIC DUCT HEATER BY WARREN MFG. OR EQUAL, 40KW, 208V/3Ph/60Hz, WITH SCR CONTROL, DIFFERENTIAL PRESSURE AIRFLOW SWITCH, CONTROL TRANSFORMER WITH FUSED PRIMARY AND SECONDARY, AUTO RESET PRIMARY/MANUAL RESET SECONDARY THERMAL CUTOUTS, DISCONNECTING BREAK MAGNETIC CONTACTORS, THRU-THE-DOOR FUSED DISCONNECT SWITCH AND SIDE SLIP-IN VERTICAL UPFLOW CONSTRUCTION SUITABLE FOR LINED DUCT INSERTION. FURNISH WIRED FOR SINGLE POINT POWER SUPPLY UL LABELED.
H / C	NORTEC RESDELUX 8 lb/hr WALL MOUNTED ELECTRODE STEAM HUMIDIFIER WITH BLOWER PACK AND WALL MOUNTED HUMIDISTAT. FURNISH WIRED FOR SINGLE POINT 208/240 V POWER CONNECTION.

AIR DISTRIBUTION SCHEDULE

MARK	MODEL	MATERIAL	COLOR	MAX NC	REMARKS
CD-1	7000-6-D7-TR	ALUMINUM	OFF-WHITE	30	1, 2
RR-1	7000R-6-D7	ALUMINUM	OFF-WHITE	30	1
RR-2	RHD	ALUMINUM	OFF-WHITE	30	1
SR-1	V4004D	ALUMINUM	OFF-WHITE	30	1

REMARKS:
1. MODEL NUMBER BASED ON METAL*AIRE.
2. WITH 4-WAY AIR PATTERN.

AIR HANDLING UNIT SCHEDULE

MARK	MODEL SIZE	FAN CFM	OA CFM	SUPPLY FAN TYPE	SUPPLY FAN HP	SUPPLY FAN V/Ph/Hz	SUPPLY FAN EXT SP	GAS FURNACE MBH INPUT	COOLING COIL TOTAL MBH	COOLING COIL SEN MBH	COOLING COIL EAT db/wb	REMARKS
AHU-C	TWE240	8800	40	FC	5	208/3/60	0.5	-	161.8	160.2	72.1/60.1	1, 2, 3
AHU-F	TUX1C100A9481A	1600	400	FC	1/2	120/1/60	0.5	100	44.3	26.0	78.0/65.7	1, 2, 4

REMARKS:
1. MODEL NUMBER BASED ON TRANE.
2. WITH SINGLE POINT POWER CONNECTION.
3. WITH DUAL CIRCUIT EVAPORATOR.
4. WITH 2/4CXCD050AC3CUA EVAPORATOR COIL.

CONDENSING UNIT SCHEDULE

MARK	MODEL	NOMINAL TONS	SYSTEM SERVED	V/Ph/Hz	REMARKS
CU-CA	TTA090	7 1/2	AHU-C	208/3/60	1, 2, 3
CU-CB	TTA090	7 1/2	AHU-C	208/3/60	1, 2, 3
CU-F	4TTA3048	4	AHU-F	208/3/60	1, 2, 3

REMARKS:
1. MODEL NUMBER BASED ON TRANE.
2. REFER TO AIR HANDLING UNIT SCHEDULE FOR CAPACITY RATING REQUIREMENTS.
3. PROVIDE WITH 5 YEAR COMPRESSOR WARRANTY.

REVISIONS:

This document originally issued and sealed by David L. Cundiff, P.E. No. 11788 on 2/21/07. This media should not be considered a certified document.

Master Engineers And Designers, Inc.
904 Lakeside Drive, Lynchburg, VA 24501
434-846-1350 Fax: 434-846-1351

INFORMATION TECHNOLOGY BUILDING
INFORMATION TECHNOLOGY DEPARTMENT
CITY OF LYNCHBURG, VIRGINIA

3550 YOUNG PLACE
LYNCHBURG, VIRGINIA

HVAC - LEGEND, NOTES & SCHEDULES

DATE ISSUED:	02/15/07
SCALE:	GRAPHIC
JOB. NO.	262-187
DESIGNED:	CLS
DRAWN:	GTW
CHECKED:	DLC
APPROVED:	-

DRAWING NO. M1.0
SHEET 1 OF 3
REVISION

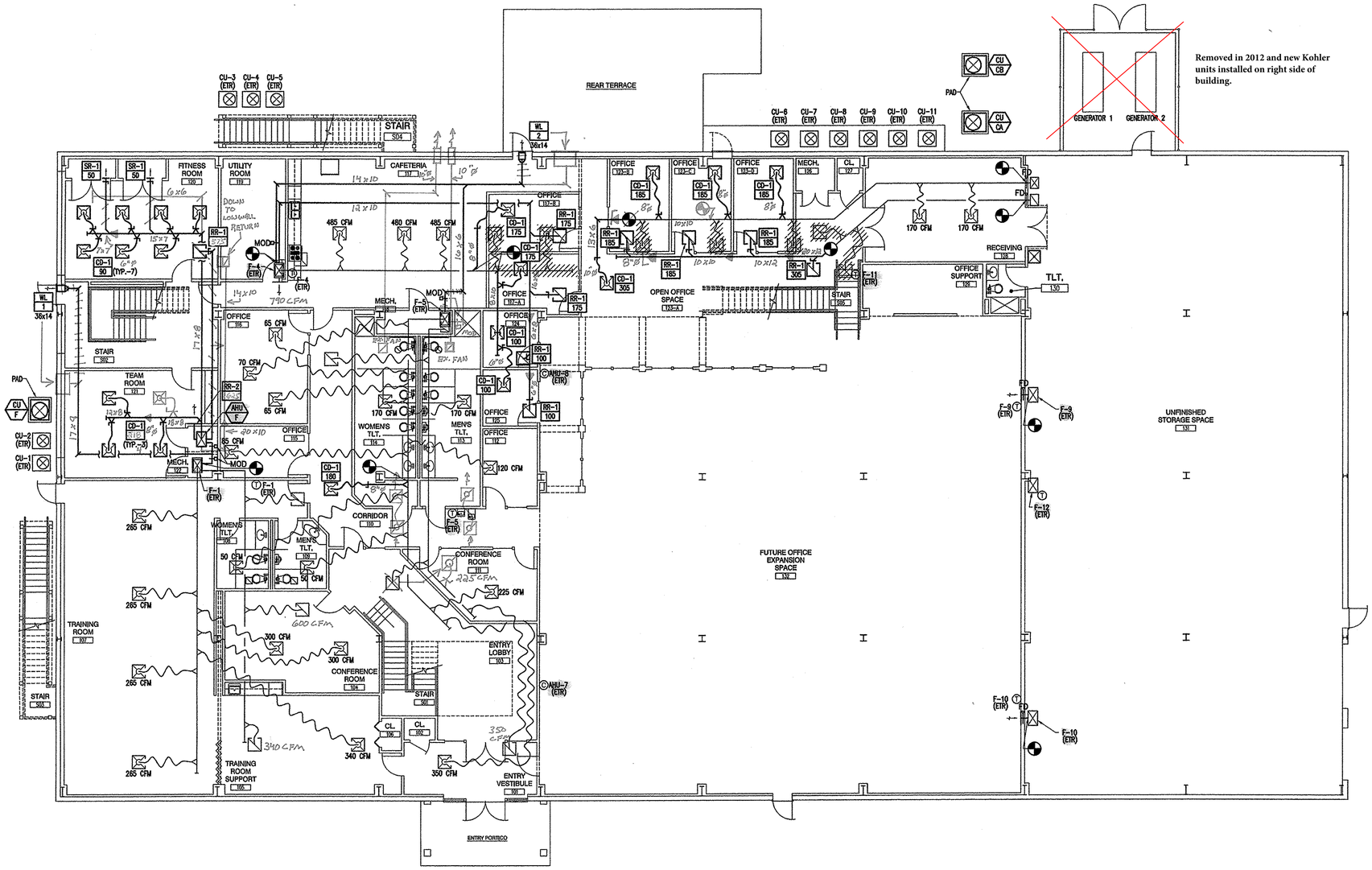

NOTE: OCCUPIED RATE OF OUTSIDE AIR PER SYSTEM:

F-1	400 CFM
AHU-F	400 CFM
F-4	660 CFM
F-5	400 CFM

HVAC – LEVEL ONE

SCALE: 1/8"=1'-0"

8' 0' 8' 16'
GRAPHIC SCALE

REVISIONS:

This document originally issued and sealed by David L. Cundiff, P.E. No. 11788 on 2/21/07. This media should not be considered a certified document.

Master Engineers And Designers, Inc.
904 Lakeside Drive, Lynchburg, VA 24501
434-846-1350 Fax: 434-846-1351

INFORMATION TECHNOLOGY BUILDING
INFORMATION TECHNOLOGY DEPARTMENT
CITY OF LYNCHBURG, VIRGINIA
3550 YOUNG PLACE
LYNCHBURG, VIRGINIA

HVAC - LEVEL ONE

DATE ISSUED:	02/15/07
SCALE:	GRAPHIC
JOB. NO.	262-187
DESIGNED:	CLS
DRAWN:	GTW
CHECKED:	DLC
APPROVED:	–

DRAWING NO. M1.1
SHEET 2 OF 3
REVISION

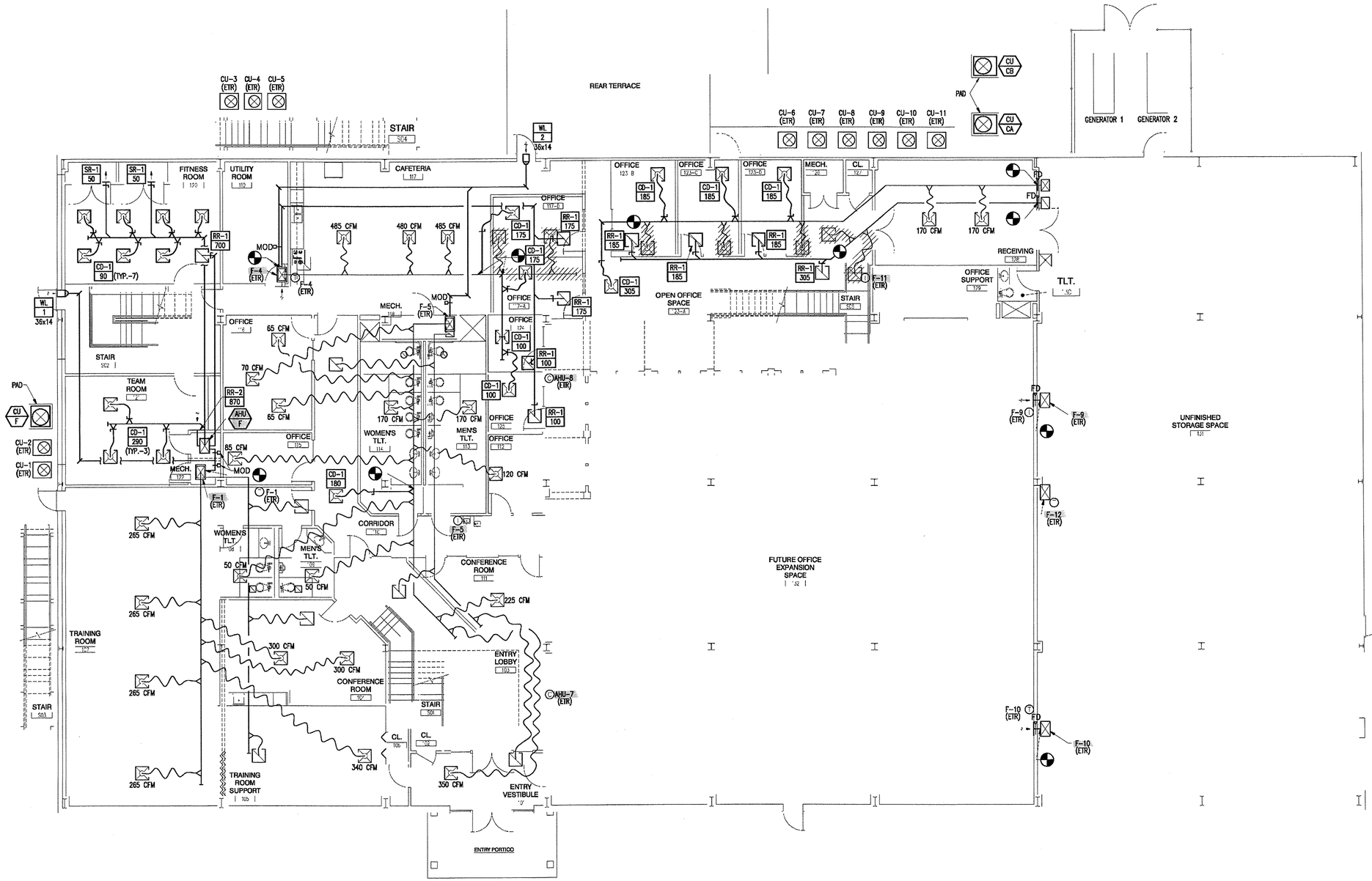

NOTE: OCCUPIED RATE OF OUTSIDE AIR PER SYSTEM:

F-1	400 CFM
AHU-F	400 CFM
F-4	660 CFM
F-5	400 CFM

NORTH

HVAC – LEVEL ONE

SCALE: 1/8"=1'-0"

8' 0' 8' 16'

GRAPHIC SCALE

REVISIONS:

This document originally issued and sealed by David L. Cundiff, P.E. No. 11788 on 2/21/07. This media should not be considered a certified document.

Master Engineers And Designers, Inc.
904 Lakeside Drive, Lynchburg, VA 24501
434-846-1350 Fax: 434-846-1351

INFORMATION TECHNOLOGY BUILDING
INFORMATION TECHNOLOGY DEPARTMENT
CITY OF LYNCHBURG, VIRGINIA
3550 YOUNG PLACE
LYNCHBURG, VIRGINIA

HVAC - LEVEL ONE

DATE ISSUED:	02/15/07
SCALE:	GRAPHIC
JOB. NO.	262-187
DESIGNED:	CLS
DRAWN:	GTW
CHECKED:	DLC
APPROVED:	–

DRAWING NO. M1.1

SHEET 2 OF 3

REVISION

NOTE: MODI SHALL BE EQUAL TO RUSKIN MODEL PSD – PRESSURE SEAL BUBBLE – TIGHT ISOLATION DAMPER WITH 120V 2–POSITION MOTOR OPERATOR. NC INDICATES NORMALLY CLOSED AND NO INDICATES NORMALLY OPEN POSITION.

WHENEVER AHU–C IS OPERATING AND PRODUCING AIR CIRCULATION DAMPERS MODI SHALL BE IN NORMAL POSITION. IF AT ANY TIME AHU–C IS NOT CIRCULATING AIR TO THE COMPUTER ROOM, DAMPERS MODI SHALL CHANGE TO THEIR OPPOSITE POSITION AND F–6 SHALL THEN CONDITION SPACE 235–G AS BACK–UP COOLING. WHENEVER THIS CONDITION OCCURS THE OUTSIDE AIR DAMPERS AT F–6 AND AHU–C SHALL BE CLOSED.

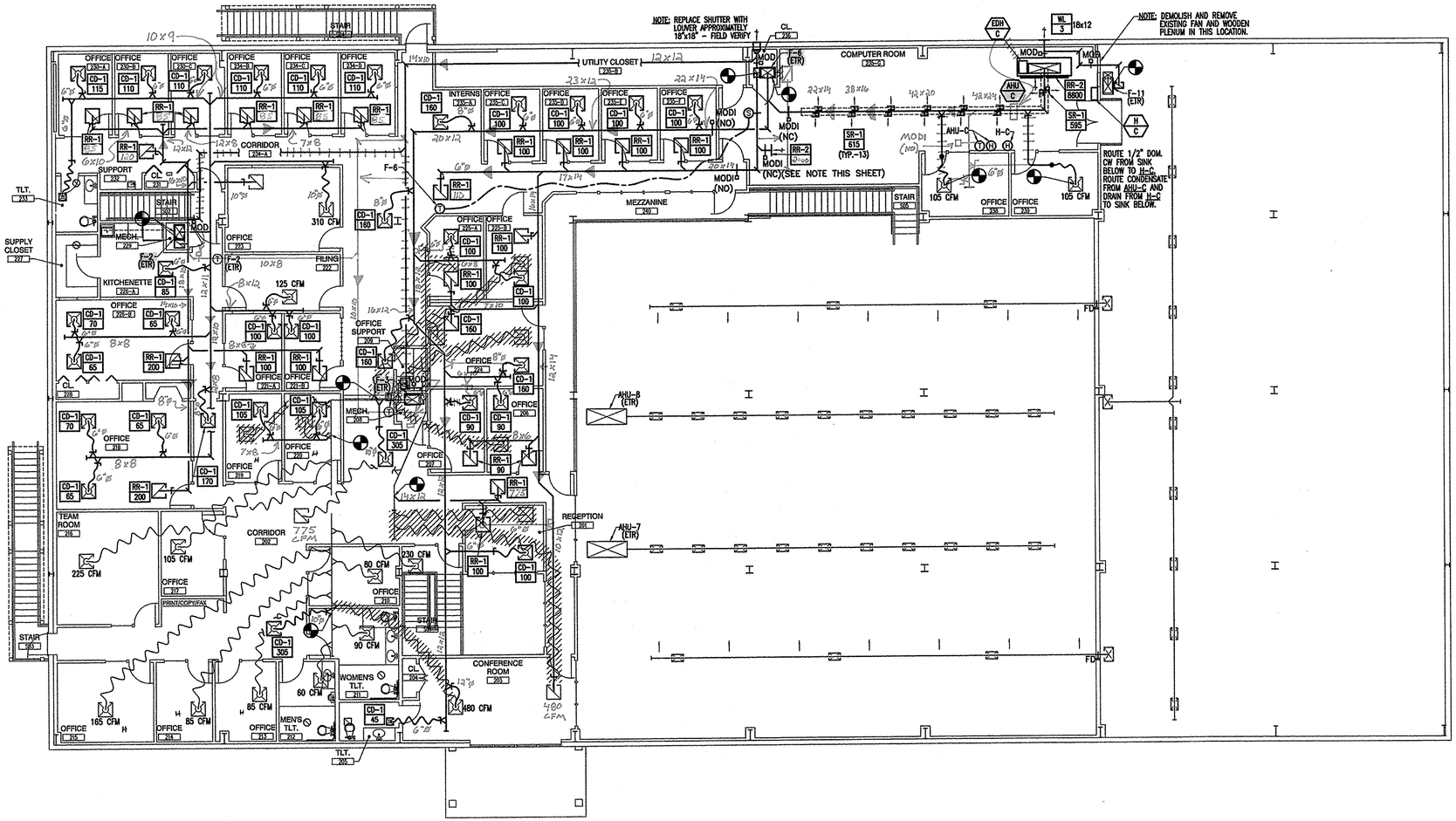

NOTE: OCCUPIED RATE OF OUTSIDE AIR PER SYSTEM:

F–2	335 CFM
F–3	395 CFM
F–6	415 CFM
F–11	145 CFM
AHU–2	40 CFM

NORTH

HVAC – LEVEL TWO

SCALE: 1/8"=1'–0"

NOTE: REMOVE ALL EXISTING SUPPLY AND RETURN DUCTWORK AND AIR DISTRIBUTION DEVICES ON F–2 AND F–6 SYSTEMS. INSTALL NEW SYSTEMS AS SHOWN.

8' 0' 8' 16'
GRAPHIC SCALE

REVISIONS:

This document originally issued and sealed by David L. Cundiff, P.E. No. 11788 on 2/28/07. This media should not be considered a certified document.

Master Engineers And Designers, Inc.
904 Lakeside Drive, Lynchburg, VA 24501
434-846-1330 Fax: 434-846-1331

INFORMATION TECHNOLOGY BUILDING
INFORMATION TECHNOLOGY DEPARTMENT
CITY OF LYNCHBURG, VIRGINIA
3550 YOUNG PLACE
LYNCHBURG, VIRGINIA

HVAC – LEVEL TWO

DATE ISSUED:	02/15/07
SCALE:	GRAPHIC
JOB. NO.	262–187
DESIGNED:	CLS
DRAWN:	GTW
CHECKED:	DLC
APPROVED:	–

DRAWING NO. M1.2
SHEET 3 OF 3
REVISION

NOTE: MODI SHALL BE EQUAL TO RUSKIN MODEL PSD – PRESSURE SEAL BUBBLE – TIGHT ISOLATION DAMPER WITH 120V 2–POSITION MOTOR OPERATOR. NC INDICATES NORMALLY CLOSED AND NO INDICATES NORMALLY OPEN POSITION.

WHENEVER AHU–C IS OPERATING AND PRODUCING AIR CIRCULATION DAMPERS MODI SHALL BE IN NORMAL POSITION. IF AT ANY TIME AHU–C IS NOT CIRCULATING AIR TO THE COMPUTER ROOM, DAMPERS MODI SHALL CHANGE TO THEIR OPPOSITE POSITION AND F–6 SHALL THEN CONDITION SPACE 235–G AS BACK–UP COOLING. WHENEVER THIS CONDITION OCCURS THE OUTSIDE AIR DAMPERS AT F–6 AND AHU–C SHALL BE CLOSED.

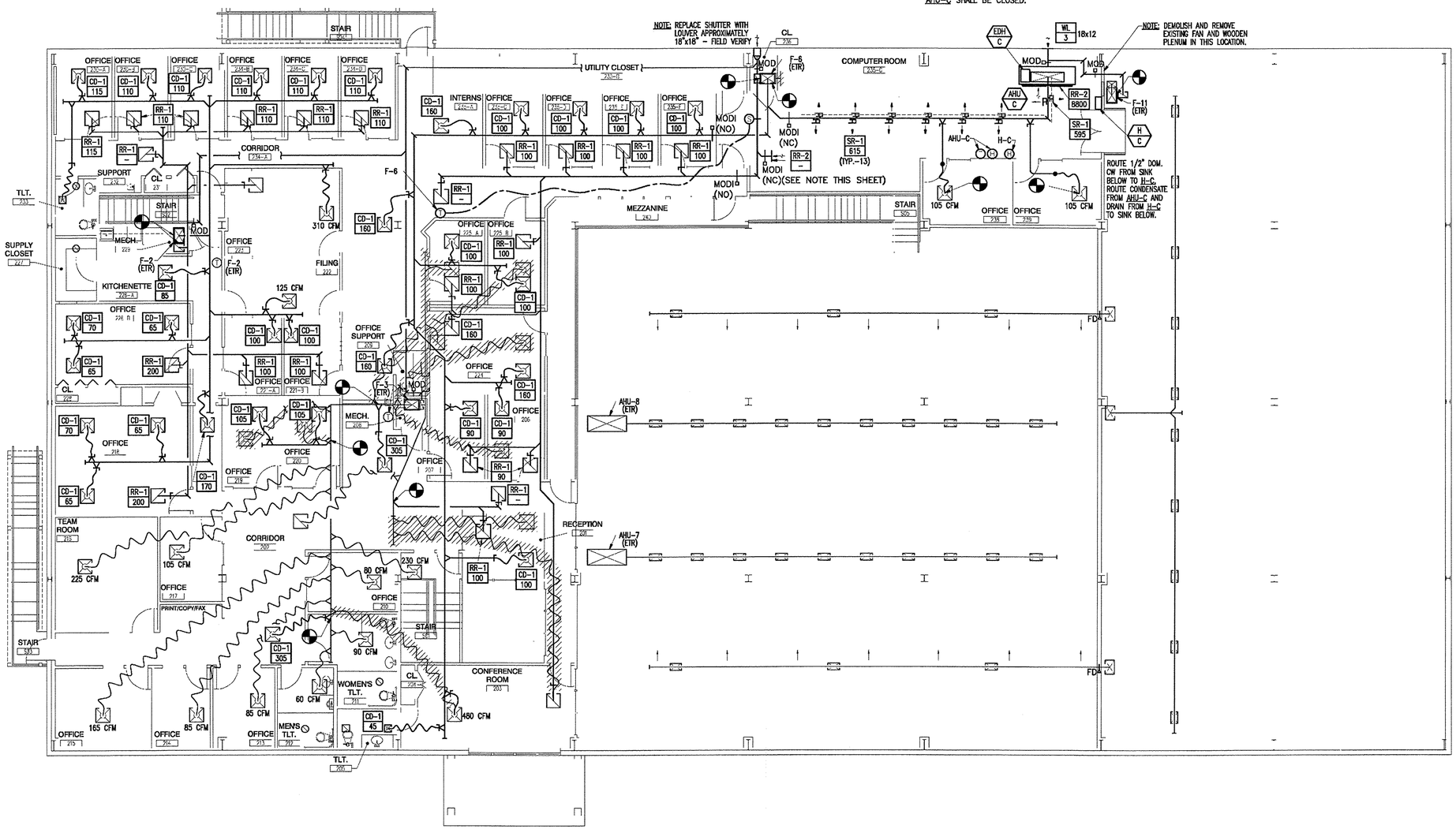

NOTE: OCCUPIED RATE OF OUTSIDE AIR PER SYSTEM:

F–2	335 CFM
F–3	395 CFM
F–6	415 CFM
F–11	145 CFM
AHU–2	40 CFM

NORTH

HVAC – LEVEL TWO

SCALE: 1/8"=1'–0"

NOTE: REMOVE ALL EXISTING SUPPLY AND RETURN DUCTWORK AND AIR DISTRIBUTION DEVICES ON F–2 AND F–6 SYSTEMS. INSTALL NEW SYSTEMS AS SHOWN.

8' 0' 8' 16'
GRAPHIC SCALE

REVISIONS:

This document originally issued and sealed by David L. Cundiff, P.E. No. 11788 on 2/28/07. This media should not be considered a certified document.

Master Engineers And Designers, Inc.
904 Lakeside Drive, Lynchburg, VA 24501
434-846-3350 Fax: 434-846-3351

INFORMATION TECHNOLOGY BUILDING
INFORMATION TECHNOLOGY DEPARTMENT
CITY OF LYNCHBURG, VIRGINIA
3550 YOUNG PLACE
LYNCHBURG, VIRGINIA

HVAC – LEVEL TWO

DATE ISSUED:	02/15/07
SCALE:	GRAPHIC
JOB. NO.	262–187
DESIGNED:	CLS
DRAWN:	GTW
CHECKED:	DLC
APPROVED:	–

DRAWING NO. M1.2
SHEET 3 OF 3
REVISION

A.S. AMERICAN STANDARD

FIXTURE SCHEDULE AND SPECIFICATIONS

DESIG	FIXTURE	MANUFACT. & MODEL	SIZE	SUPPLY FITTINGS AND STOPS	TRAP	CARRIER	REMARKS & ACCESSORIES	CONNECTION SIZES		
								WASTE	HOT	COLD
P–1	WATER CLOSET	RELOCATED	STD	FLUSH VALVE SLOAN ROYAL	–	FLOOR MOUNTED	SEAT: BEMIS 1955–C	4"	–	1"
P–2	LAV	A.S. MODEL 3420–403	20x17	⅜ ANGLE STOPS	1¼"x1½" 17GA P–TRAP	COUNTER MOUNTED	FAUCET: MOEN 8430	1½"	½"	½"
P–3	ELECTRIC WATER COOLER	FURNISHED BY OWNER	–	⅜ ANGLE STOP	1¼"x1½" 17GA P–TRAP	WALL MOUNTED	–	1½"	–	½"

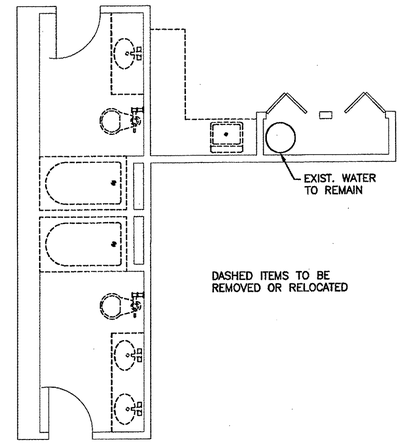

PLUMBING DEMOLITION PLAN

SCALE: 1/4"=1'–0"

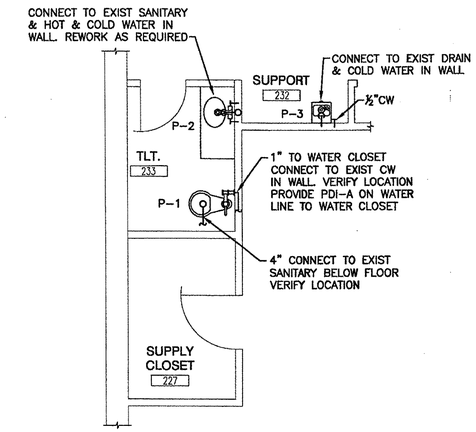

PLUMBING PARTIAL FLOOR PLAN

SCALE: 1/4"=1'–0"

SPRINKLER SYSTEM NOTES

1. REVISE SPRINKLER SYSTEM HEAD LOCATION IN ACCORDANCE WITH NEW ROOM LAYOUT. SEE ARCHITECTURAL DRAWINGS
2. CONTRACTOR SHALL OBTAIN EXISTING SPRINKLER DWGS FROM INSTALLING CONTRACTOR AND REVISE SPRINKLER SYSTEM HYDRAULIC CALCULATIONS AS REQUIRED.

DEMOLITION NOTES

1. REMOVE EXISTING PLUMBING FIXTURES AS SHOWN. SAVE ONE WATER CLOSET FOR REUSE.
2. CAP ALL UNUSED PIPING BELOW FLOOR OR BEHIND WALL SURFACE.
3. RELOCATE PIPING IN WALL AS REQUIRED FOR NEW LAYOUT.

PLUMBING NOTES

GENERAL PROVISIONS

A. INSTALLATION SHALL BE IN STRICT ACCORDANCE WITH THE UNIFORM STATEWIDE BUILDING CODE, INCLUDING REFERENCED CODES AND STANDARDS AND IN ACCORDANCE WITH MANDATES OF THE LOCAL BUILDING OFFICALS.

B. THE GENERAL ARRANGEMENT AND LOCATIONS OF PIPING, FIXTURES, ETC. ARE INDICATED BY THE DRAWINGS AND SHALL BE INSTALLED IN ACCORDANCE THEREWITH, WITH THE EXCEPTION OF SUCH CHANGES AS MAY BE REQUIRED ON ACCOUNT OF OTHER TRADES. CONTRACTOR SHALL COORDINATE WORK WITH INSTALLATION OF OTHER SUBCONTRACTORS.

C. PLUMBING WORK SHALL BE COORDINATED WITH THE CONTRACTOR AS TO SCHEDULING, DIMENSIONING AND LOCATION OF EQUIPMENT.

D. MAJOR ITEMS ARE SHOWN ON THE PLANS. THE CONTRACTOR SHALL BE RESPONSIBLE FOR ALL INCIDENTAL ITEMS REQUIRED TO PROVIDE A COMPLETE AND FUNCTIONAL SYSTEM.

E. SUBSTITUTION FOR SPECIFIED ITEMS SHALL BE BORNE BY THE CONTRACTOR.

F. ALL REQUIRED WALL OR FLOOR OPENINGS SHALL BE COORDINATED WITH THE CONTRACTOR.

G. ALL PIPING SHALL BE ABOVE CEILING UNLESS INDICATED OTHERWISE.

H. ALL EQUIPMENT SHALL BE WIPED CLEAN, REMOVING ALL TRACES OF OIL, DIRT, OR PAINT SPOTS.

I. PROVIDE SUPPORTS TO RIGIDLY ATTACH ALL EQUIPMENT, APPURTENANCES AND PIPE AS REQUIRED FOR SUPPORT. PRIOR TO INSTALLATION OF HANGERS AND INSERTS, THE CONTRACTOR SHALL COORDINATE LOCATIONS AND EQUIPMENT TO MINIMIZE CONFLICTS WITH OTHER BUILDING SYSTEMS.

J. CONTRACTOR SHALL MAKE FINAL CONNECTIONS TO ALL EQUIPMENT INDICATED TO BE FURNISHED BY OTHERS.

K. ALL PIPE OF THE SAME SIZE SHALL BE OF THE SAME MATERIAL.

L. SLOPE ALL DRAIN LINES ¼ INCH PER FOOT MINIMUM FOR SIZES LESS THAN 4 INCHES, SLOPE ⅛ INCH PER FOOT SIZES 4 INCHES AND LARGER UNLESS INDICATED OTHERWISE BY INVERTS ON DWGS.

M. DOMESTIC HOT AND COLD WATER PIPING SHALL BE ½ INCH SIZE UNLESS INDICATED OTHERWISE.

N. BALL VALVES MAY BE USED IN LIEU OF GATE VALVES 2 INCHES OR SMALLER.

O. ALL EXPOSED FIXTURE SUPPLIES AND WASTE LINES SHALL BE CHROME PLATED.

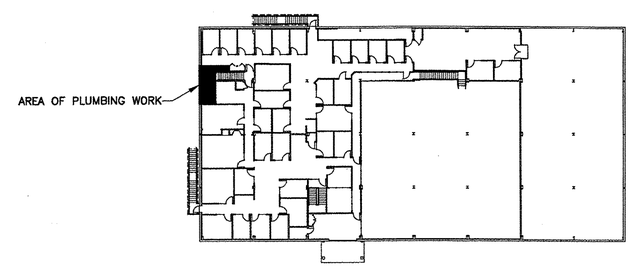

KEY PLAN – SECOND FLOOR

NTS

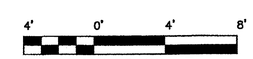

GRAPHIC SCALE

1/4" = 1'–0"

REVISIONS:

COMMONWEALTH OF VIRGINIA
DAVID L. CUNDIFF
No.11788
03/21/07
PROFESSIONAL ENGINEER

Master Engineers And Designers, Inc.
904 Lakeside Drive, Lynchburg, VA 24501
434-846-1550 Fax: 434-846-1551

INFORMATION TECHNOLOGY BUILDING
INFORMATION TECHNOLOGY DEPARTMENT
CITY OF LYNCHBURG, VIRGINIA

3550 YOUNG PLACE
LYNCHBURG, VIRGINIA

PLUMBING – PARTIAL PLANS
SCHEDULE & NOTES

DATE ISSUED:	02/15/07
SCALE:	GRAPHIC
JOB. NO.	262–187
DESIGNED:	DLC
DRAWN:	ATE
CHECKED:	DLC
APPROVED:	DLC

DRAWING NO.
P1.0
SHEET 1 OF ?
REVISION

PLAN LEGEND

RACEWAY

- CONDUIT RUN EXPOSED
- CONDUIT RUN CONCEALED ABOVE CEILINGS OR IN WALLS
- CONDUIT RUN CONCEALED BENEATH FLOORS OR IN WALLS
- CONDUIT TURNING UP
- CONDUIT TURNING DOWN
- HOMERUN
- (J) JUNCTION BOX

WIRING DEVICES

- RECEPTACLE, SINGLE, NEMA 5-20R
- RECEPTACLE, DUPLEX, NEMA 5-20R
- GFI RECEPTACLE, DUPLEX, NEMA 5-20R, GFI
- WP RECEPTACLE, DUPLEX, NEMA 5-20R, WEATHERPROOF
- RECEPTACLE, DUPLEX, NEMA 5-20R, FLUSH, FLOOR
- S SWITCH, ONE / WAY
- S^3 SWITCH, 3/W
- S^4 SWITCH, 4/W
- S^D SWITCH, DIMMER

SAFETY SWITCHES

- F SAFETY SWITCH, FUSIBLE
- SAFETY SWITCH, NON-FUSIBLE

GROUNDING

- GROUND ROD
- B BOND TO INDICATED OBJECT

FIRE DETECTION AND ALARM SYSTEM

- F MANUAL PULL STATION
- F DS DUCT SMOKE DETECTOR
- F HI HVAC INTERFACE MODULE
- F V VALVE SUPERVISORY SWITCH
- F F SPRINKLER FLOW SWITCH
- F EVACUATION NOTIFICATION DEVICE, COMBINATION AUDIBLE / VISUAL
- F EVACUATION NOTIFICATION DEVICE, VISUAL ONLY
- FAA FIRE ALARM ANNUNCIATOR
- FACP FIRE ALARM CONTROL PANEL

LIGHTING

- A FIXTURE, FLUORESCENT, CEILING-MOUNTED. "A" INDICATES FIXTURE TYPE.
- FIXTURE, FLUORESCENT, CEILING-MOUNTED, EMERGENCY EGRESS
- FIXTURE, FLUORESCENT, WALL-MOUNTED
- FIXTURE, FLUORESCENT, WALL-MOUNTED, EMERGENCY EGRESS
- FIXTURE, FLUORESCENT OR INCANDESCENT, CEILING-MOUNTED
- FIXTURE, FLUORESCENT OR INCANDESCENT, WALL-MOUNTED
- FIXTURE, FLUORESCENT OR INCANDESCENT, WALL-MOUNTED, EMERGENCY EGRESS
- FIXTURE, EXIT, UNSWITCHED, SINGLE-FACED, DOUBLE-FACED. ARROWS AS INDICATED ON DRAWING.

DATA / TELEPHONE SYSTEM

- TELEPHONE OUTLET BOX (NOTE 1)
- DATA OUTLET BOX (NOTE 1)

MISCELLANEOUS

- BC BATTERY CHARGER
- H HEATER
- (M) MOTOR

SECURITY ACCESS CONTROL SYSTEM

- SACP SECURITY ACCESS CONTROL PANEL
- S DS DOOR SWITCH
- S SA SECURE / ACCESS KEYPAD
- S SECURITY INTRUSION AUDIBLE NOTIFICATION DEVICE

PLAN LEGEND NOTES

1. 4" x 4" x 2 1/2" TWO-GANG OUTLET BOX WITH TWO-GANG PLASTER RING. FROM BOX, RUN 1" C CONCEALED IN WALL, TURNED OUT INTO CEILING PLENUM. INSTALL INSULATING BUSHING ON END OF CONDUIT. INSTALL PULL ROPE IN CONDUIT.
2. 4" x 4" x 2 1/2" OUTLET BOX WITH ONE-GANG PLASTER RING.

ABBREVIATIONS

AEP	AMERICAN ELECTRIC POWER
AF	AMPERE FRAME
AFF	ABOVE FINISHED FLOOR
AFG	ABOVE FINISHED GRADE
AHU	AIR HANDLING UNIT
AIC	AMPERES INTERRUPTING CAPACITY
AMPS	AMPERES
AT	AMPERE TRIP
ATS	AUTOMATIC TRANSFER SWITCH
BCSD	BARE COPPER SOFT DRAWN
BFG	BELOW FINISHED GRADE
BLDG	BUILDING
C	CONDUIT
CH	COUNTER HEIGHT + ENOUGH ELEVATION TO CLEAR BACKSPLASH
CKT	CIRCUIT
CONN	CONNECTED
CU	CONDENSING UNIT
CWA	CONSTANT WATTAGE AUTOTRANSFORMER
DIA	DIAMETER
EGC	EQUIPMENT GROUNDING CONDUCTOR
EWC	ELECTRIC WATER COOLER
EXIST	EXISTING
FAA	FIRE ALARM ANNUNCIATOR
FACP	FIRE ALARM CONTROL PANEL
FDAS	FIRE DETECTION AND ALARM SYSTEM
FLA	FULL LOAD AMPERES
FLEX	FLEXIBLE CONDUIT, LIQUIDTIGHT
FPEM	FUSE PER EQUIPMENT MANUFACTURER
GEC	GROUNDING ELECTRODE CONDUCTOR
GFI	GROUND FAULT INTERRUPTER
GND	GROUND
HP	HORSEPOWER OR HEAT PUMP
KCMIL	THOUSAND CIRCULAR MILS
KVA	KILOVOLT-AMPERES
KW	KILOWATTS
MAX	MAXIMUM
MCCB	MOLDED CASE CIRCUIT BREAKER
MIN	MINIMUM
MTS	MANUAL TRANSFER SWITCH
N, NEUT	NEUTRAL
N/A	NOT APPLICABLE
NEMA	NATIONAL ELECTRICAL MANUFACTURERS ASSOCIATION
NTS	NOT TO SCALE
O.C.	ON CENTER
OFCI	OWNER-FURNISHED, CONTRACTOR-INSTALLED
P	POLE
PDU	POWER DISTRIBUTION UNIT
PH	PHASE
PVC	POLYVINYL CHLORIDE CONDUIT
QTY	QUANTITY
RET	RETURN
RMS	ROOT MEAN SQUARE
RSC	RIGID STEEL CONDUIT
RTU	ROOF TOP UNIT
SACP	SECURITY ACCESS CONTROL PANEL
SE	SERVICE ENTRANCE
SUP	SUPPLY
SYM	SYMMETRICAL
THD	TOTAL HARMONIC DISTORTION
TYP	TYPICAL
UON	UNLESS OTHERWISE NOTED
UPS	UNINTERRUPTIBLE POWER SUPPLY
V	VOLTS
VAC	VOLTS ALTERNATING CURRENT
W /	WITH
WH	WATER HEATER
WP	WEATHERPROOF

NOTES (GENERAL)

GN1. THE EXISTING CONDITIONS DRAWINGS WERE PREPARED TO DOCUMENT THE EXISTING CONDITIONS OF THE FACILITY ELECTRICAL SYSTEM. THEY WERE PREPARED BASED UPON THE ENGINEER'S OBSERVATIONS IN THE FIELD EXERCISING DILIGENCE AND PROFESSIONAL CARE. THE ENGINEER CAN NOT, AND DOES NOT, REPRESENT THAT THE DRAWINGS ARE ACCURATE IN EVERY RESPECT.

GN2. CONDUIT RUNS ARE SHOWN TO INDICATE CIRCUIT GROUPINGS AND SWITCHING FUNCTIONS AND DO NOT SHOW ACTUAL ROUTING.

DRAWING LIST

E0.1 LEGENDS, NOTES, ABBREVIATIONS
E1.1 LIGHTING – LEVEL ONE – EXISTING CONDITIONS
E1.2 LIGHTING – LEVEL TWO – EXISTING CONDITIONS
E1.3 LIGHTING – LEVEL ONE – REWORKED CONDITIONS
E1.4 LIGHTING – LEVEL TWO – REWORKED CONDITIONS
E1.5 LIGHTING FIXTURE SCHEDULE (Sheet 1 of 2)
E1.5 LIGHTING FIXTURE SCHEDULE (Sheet 2 of 2)
E2.1 POWER & MISCELLANEOUS SYSTEMS – LEVEL ONE – EXISTING CONDITIONS
E2.2 POWER & MISCELLANEOUS SYSTEMS – LEVEL TWO – EXISTING CONDITIONS
E2.3 POWER & MISCELLANEOUS SYSTEMS – LEVEL ONE – REWORKED CONDITIONS
E2.4 POWER & MISCELLANEOUS SYSTEMS – LEVEL TWO – REWORKED CONDITIONS
E2.5 SERVICE ENTRANCE – REWORKED CONDITIONS
E3.1 ONE LINE DIAGRAM – EXISTING CONDITIONS (Sheet 1 of 2)
E3.2 ONE LINE DIAGRAM – EXISTING CONDITIONS (Sheet 2 of 2)
E3.3 ONE LINE DIAGRAM – REWORKED CONDITIONS (Sheet 1 of 2)
E3.4 ONE LINE DIAGRAM – REWORKED CONDITIONS (Sheet 2 of 2)
E4.1 POWER SCHEDULES (Sheet 1 of 11)
E4.2 POWER SCHEDULES (Sheet 2 of 11)
E4.3 POWER SCHEDULES (Sheet 3 of 11)
E4.4 POWER SCHEDULES (Sheet 4 of 11)
E4.5 POWER SCHEDULES (Sheet 5 of 11)
E4.6 POWER SCHEDULES (Sheet 6 of 11)
E4.7 POWER SCHEDULES (Sheet 7 of 11)
E4.8 POWER SCHEDULES (Sheet 8 of 11)
E4.9 POWER SCHEDULES (Sheet 9 of 11)
E4.10 POWER SCHEDULES (Sheet 10 of 11)
E4.11 POWER SCHEDULES (Sheet 11 of 11)
E5.1 FIRE & SECURITY SYSTEMS – LEVEL ONE – REWORKED CONDITIONS
E5.2 FIRE & SECURITY SYSTEMS – LEVEL TWO – REWORKED CONDITIONS

REVISIONS:

This document originally issued and sealed by Walter G. Miles, P.E. No. 6740 on 02/21/07. This media should not be considered a certified document.

Master Engineers And Designers, Inc.
904 Lakeside Drive, Lynchburg, VA 24501
434-846-1550 Fax: 434-846-1531

INFORMATION TECHNOLOGY BUILDING
INFORMATION TECHNOLOGY DEPARTMENT
CITY OF LYNCHBURG, VIRGINIA
3550 YOUNG PLACE
LYNCHBURG, VIRGINIA

LEGENDS, NOTES, ABBREVIATIONS

DATE ISSUED:	02/15/07
SCALE:	NONE
JOB. NO.	262-187
DESIGNED:	WGM
DRAWN:	WGM
CHECKED:	WGM
APPROVED:	WGM

DRAWING NO. E0.1

SHEET 1 OF 29

REVISION

NOTES (DRAWING NO. E1.1)

1. WHERE EQUIPMENT IS SHOWN ON THIS DRAWING BUT NOT SHOWN ON DRAWING E1.3, IT SHALL BE REMOVED ALONG WITH UN-NEEDED, ASSOCIATED WIRING.

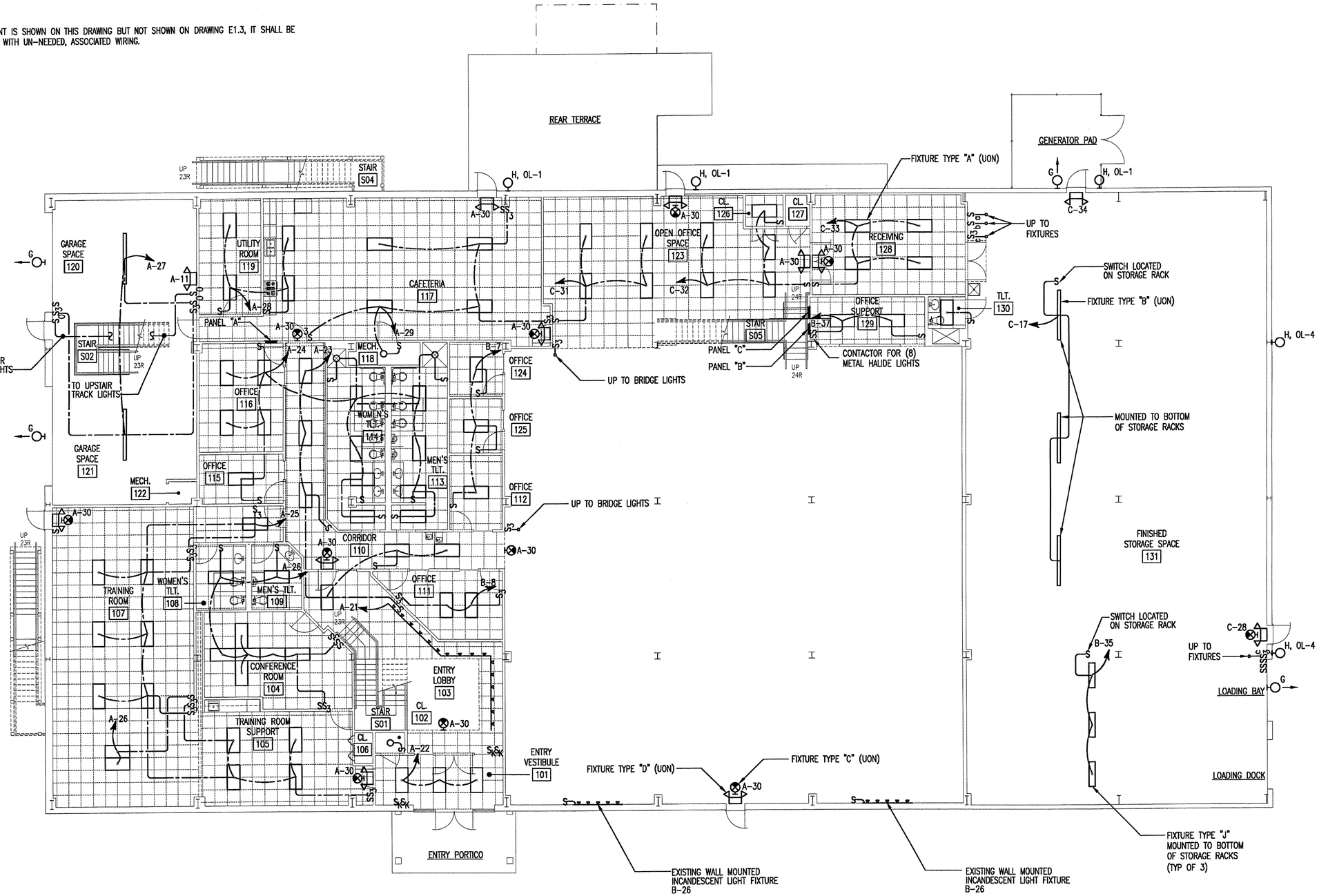

REVISIONS:

This document originally issued and sealed by Walter G. Miles, P.E. No. 6740 on 02/21/07. This media should not be considered a certified document.

Master Engineers And Designers, Inc.
904 Lakeside Drive, Lynchburg, VA 24501
434-846-1350 Fax: 434-846-1351

INFORMATION TECHNOLOGY BUILDING
INFORMATION TECHNOLOGY DEPARTMENT
CITY OF LYNCHBURG, VIRGINIA
3550 YOUNG PLACE
LYNCHBURG, VIRGINIA

LIGHTING - LEVEL ONE
EXISTING CONDITIONS

DATE ISSUED:	02/15/07
SCALE:	GRAPHIC
JOB. NO.	262-187
DESIGNED:	WGM
DRAWN:	JND
CHECKED:	WGM
APPROVED:	WGM

DRAWING NO. E1.1

REVISION

NOTES (DRAWING NO. E1.2)

1. WHERE EQUIPMENT IS SHOWN ON THIS DRAWING BUT NOT SHOWN ON DRAWING E1.4, IT SHALL BE REMOVED ALONG WITH UN-NEEDED, ASSOCIATED WIRING.
2. DIMMERS ARE LOCATED AT FLOOR LEVEL ON BRIDGE. CONDUIT FROM DIMMERS TO FIXTURES IS PROBABLY ROUTED BENEATH FLOOR TO A WALL, UP WITHIN THE WALL AND OUT TO FIXTURES.

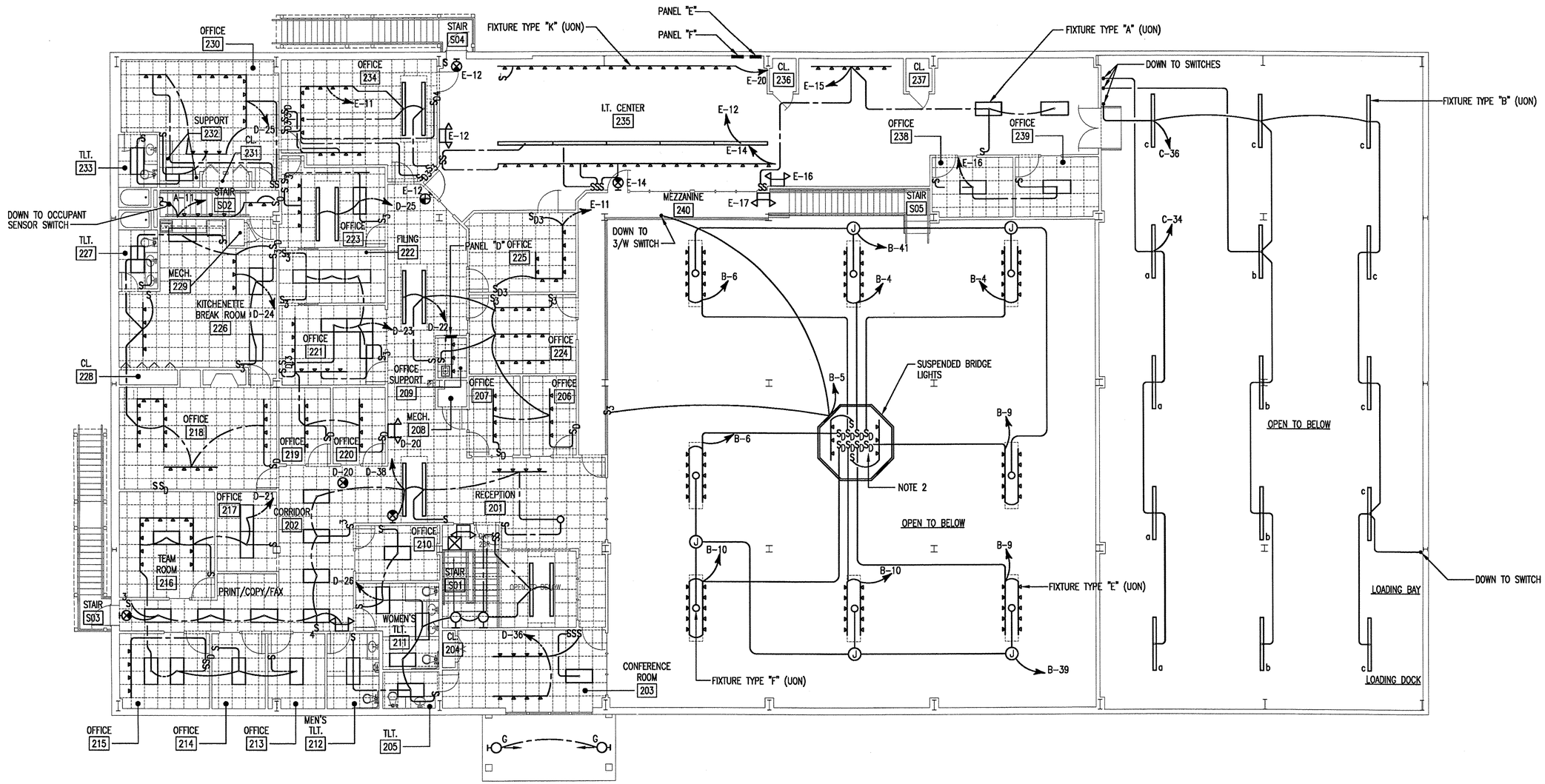

8' 0' 8' 16'
GRAPHIC SCALE

REVISIONS:

This document originally issued and sealed by Walter G. Miles, P.E. No. 6740 on 02/21/07. This media should not be considered a certified document.

Master Engineers And Designers, Inc.
904 Lakeside Drive, Lynchburg, VA 24501
434-846-1350 Fax: 434-846-1351

INFORMATION TECHNOLOGY BUILDING
INFORMATION TECHNOLOGY DEPARTMENT
CITY OF LYNCHBURG, VIRGINIA
3550 YOUNG PLACE
LYNCHBURG, VIRGINIA

LIGHTING - LEVEL TWO
EXISTING CONDITIONS

DATE ISSUED:	02/15/07
SCALE:	GRAPHIC
JOB. NO.	262-187
DESIGNED:	WGM
DRAWN:	JND
CHECKED:	WGM
APPROVED:	WGM

DRAWING NO. E1.2
SHEET 3 OF 29
REVISION

NOTES (DRAWING NO. E1.3)

1. EQUIPMENT SHOWN LIGHT IS EXISTING, TO REMAIN. EQUIPMENT SHOWN HEAVY IS TO BE PROVIDED AND INSTALLED UNDER THIS CONTRACT.
2. REPLACE REMAINING EXIT LIGHTS WITH TYPE "X" FIXTURES. NEW EXIT LIGHTS SHALL BE TYPE "X".
3. INSTALL ON WALL APPROXIMATELY 8'-0" ABOVE GRADE. COORDINATE WITH OWNER IN FIELD.
4. WIRE TO BE ENERGIZED CONTINUOUSLY.
5. WIRE FIXTURES SO THAT THEY CAN BE TURNED ON AND OFF BY WALL SWITCHES. WIRE EMERGENCY EGRESS FIXTURES SO THAT THEY ARE CONTROLLED BY WALL SWITCHES BUT ARE ILLUMINATED WHEN POWER FAILS.
6. WIRE FIXTURES SO THAT THEY ARE ILLUMINATED CONTINUOUSLY.

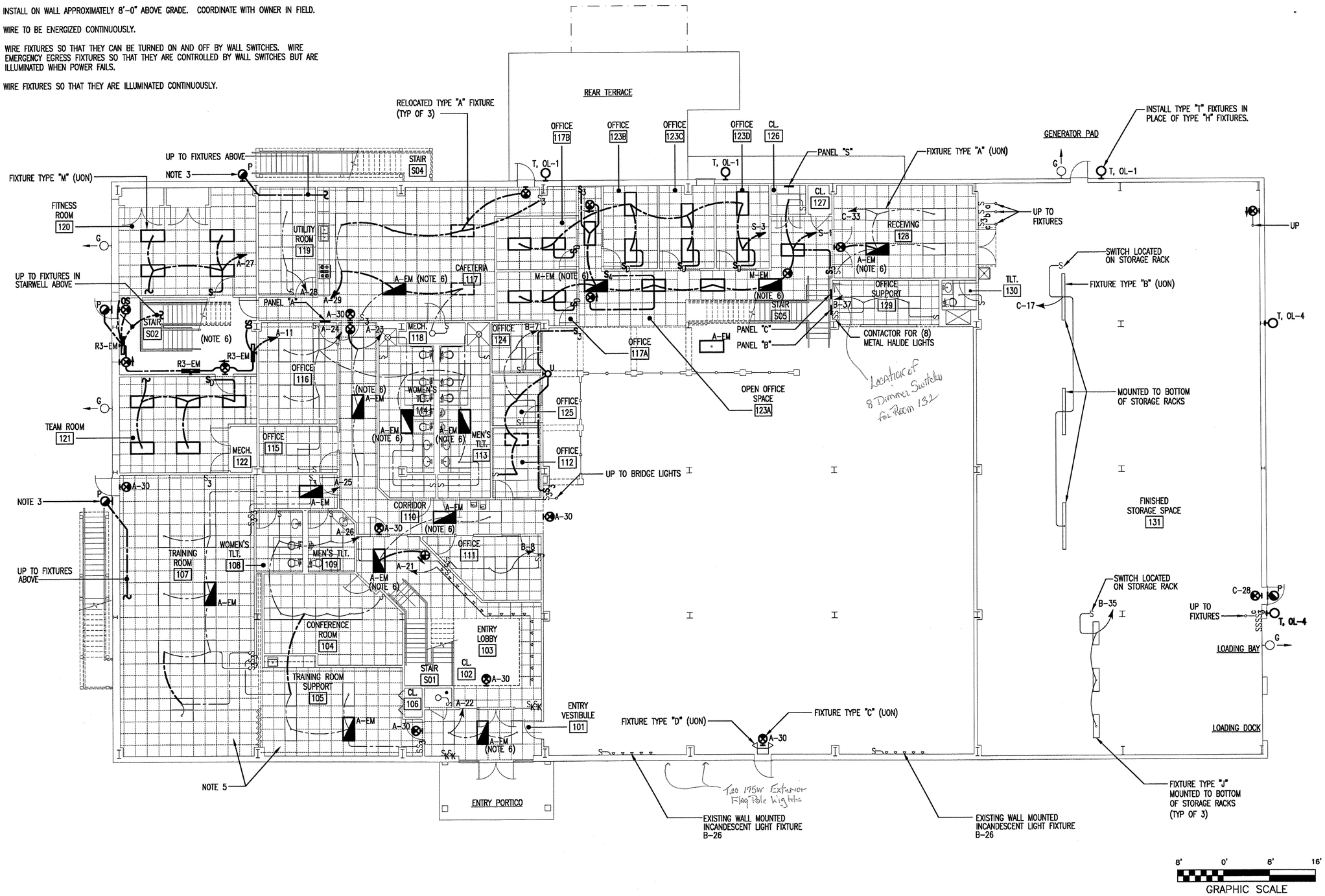

REVISIONS:

This document originally issued and sealed by Walter G. Miles, P.E. No. 6740 on 02/21/07. This media should not be considered a certified document.

Master Engineers And Designers, Inc.
904 Lakeside Drive, Lynchburg, VA 24501
434-846-1350 Fax: 434-846-1351

INFORMATION TECHNOLOGY BUILDING
INFORMATION TECHNOLOGY DEPARTMENT
CITY OF LYNCHBURG, VIRGINIA

3550 YOUNG PLACE
LYNCHBURG, VIRGINIA

LIGHTING - LEVEL ONE REWORKED CONDITIONS

DATE ISSUED:	02/15/07
SCALE:	GRAPHIC
JOB. NO.	262-187
DESIGNED:	WGM
DRAWN:	JND
CHECKED:	WGM
APPROVED:	WGM

DRAWING NO. E1.3

SHEET 4 OF 29

REVISION

NOTES (DRAWING NO. E1.3)

1. EQUIPMENT SHOWN LIGHT IS EXISTING, TO REMAIN. EQUIPMENT SHOWN HEAVY IS TO BE PROVIDED AND INSTALLED UNDER THIS CONTRACT.
2. REPLACE REMAINING EXIT LIGHTS WITH TYPE "X" FIXTURES. NEW EXIT LIGHTS SHALL BE TYPE "X".
3. INSTALL ON WALL APPROXIMATELY 8'-0" ABOVE LANDING. COORDINATE WITH OWNER IN FIELD.
4. AFTER DIMMERS CONTROLLING CKTS B-4, B-6, B-9 AND B-10 ARE REMOVED, RECONNECT SO THAT FIXTURES ARE SWITCHED BY BREAKER IN PANEL.
5. WIRE EMERGENCY EGRESS FIXTURES SO THAT THEY ARE CONTINUOUSLY ILLUMIATED.
6. LOCATE PANEL SO AS TO MAINTAIN MINIMUM WORKING CLEARANCES. COORDINATE WITH ENGINEER.

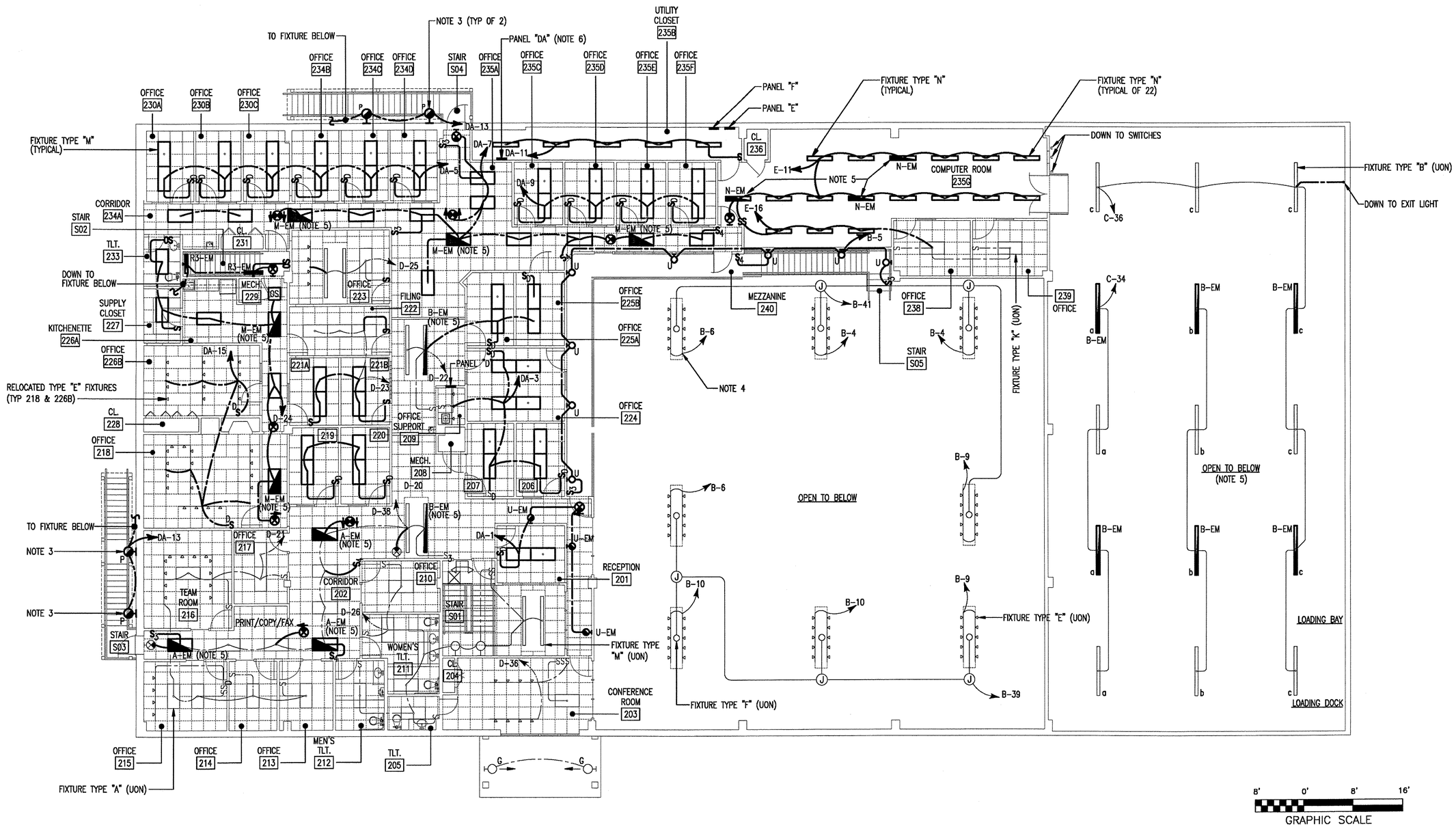

REVISIONS:

This document originally issued and sealed by Walter G. Miles, P.E. No. 6740 on 02/28/07. This media should not be considered a certified document.

Master Engineers And Designers, Inc.
904 Lakeside Drive, Lynchburg, VA 24501
434-846-3330 Fax: 434-846-3331

INFORMATION TECHNOLOGY BUILDING
INFORMATION TECHNOLOGY DEPARTMENT
CITY OF LYNCHBURG, VIRGINIA
3550 YOUNG PLACE
LYNCHBURG, VIRGINIA

LIGHTING - LEVEL TWO
REWORKED CONDITIONS

DATE ISSUED:	02/15/07
SCALE:	GRAPHIC
JOB. NO.	262-187
DESIGNED:	WGM
DRAWN:	JND
CHECKED:	WGM
APPROVED:	WGM

DRAWING NO. E1.4
SHEET 5 OF 29
REVISION

P:\262 Lynchburg City\187 Information Technology Building\Drawings\Electrical\262_187_e1.04.dwg, 2/28/2007 6:20:53 PM, PDF.pc3

LIGHTING FIXTURE SCHEDULE

	TYPE	MANUFACTURER	CATALOG NUMBER *	VOLTAGE	VOLT-AMPERES (MAXIMUM)	LAMPS QTY	LAMPS TYPE **	BALLAST	DESCRIPTION
	A	EXISTING	N/A	120	200	4	F40T12	UNKNOWN	2' x 4', 4-TUBE FLUORESCENT TROFFER, PRISMATIC LENS
EXISTING	A-EM	EXISTING	N/A	120	200	4	F40T12	UNKNOWN	INSTALL 1400 LUMEN EMERGENCY BALLAST WITH TEST SWITCH AND LAMP IN BALLAST PROVIDE LIFE SAFETY CODE COMPLIANT SELF-DIAGNOSTICS.
EXISTING	B	EXISTING	N/A	120	200	2	F96T12	UNKNOWN	INSTALL 3000 LUMEN EMERGENCY BALLAST WITH TEST SWITCH AND LAMP. IF BALLAST WILL NOT FIT IN CHANNEL, INSTALL ADJACENT TO FIXTURE IN SUITABLE HOUSING. PROVIDE LIFE SAFETY CODE COMPLIANT SELF DIAGNOSTICS.
EXISTING	B-EM	EXISTING	N/A	120	200	2	F96T12	UNKNOWN	8', 2-TUBE FLUORESCENT CHANNEL
EXISTING	C	EXISTING	N/A	120	10	N/A	N/A	N/A	EXIT LIGHT, W / BATTERY BACKUP
EXISTING	D	EXISTING	N/A	120	10	N/A	N/A	N/A	EGRESS LIGHT, W / BATTERY BACKUP
EXISTING	E	EXISTING	N/A	120	VARIES	N/A	N/A	N/A	TRACK LIGHT
EXISTING	F	EXISTING	N/A	120	480	1	400 WATT MH	UNKNOWN	HIGH BAY HID
EXISTING	G	EXISTING	N/A	120	500	1	500T3Q / CL	N/A	FLOODLIGHT
EXISTING	H	EXISTING	N/A	120	??	1	??	UNKNOWN	WALL PACK
EXISTING	J	EXISTING	N/A	120	100	2	F40T12	UNKNOWN	4', 2-TUBE FLUORESCENT CHANNEL
	M	LITHONIA	2GT8-432-A12125	120	128	4	F32T8 / TL830	THD<10%	2' x 4' STATIC FLUORESCENT, KSH-12 PRISMATIC LENS
	M-EM	LITHONIA	2GT8-432-A12125	120	128	4	F32T8 / TL830	THD<10%	SIMILAR TO TYPE "M" EXCEPT WITH 1400 LUMEN EMERGENCY BALLAST AND LIFE SAFETY CODE COMPLIANT SELF DIAGNOSTICS
	N	LITHONIA	MS5-2-54T5HO-SBL-SAR95-PERF	120	120	2	F54T5 / 830 / HO	THD<10%	4' FLUORESCENT, LOW PROFILE LOUVERED CHANNEL, HIGH GLOSS BAKED WHITE ENAMEL FINISH, SPECULAR ALUMINUM REFLECTOR
	N-EM	LITHONIA	MS5-2-54T5HO-SBL-SAR95-PERF	120	120	2	F54T5 / 830 / HO	THD<10%	SIMILAR TO TYPE "N" EXCEPT WITH 1400 LUMEN EMERGENCY BALLAST AND LIFE SAFETY CODE COMPLIANT SELF DIAGNOSTICS
	P	LITHONIA	WSR-42TRT-WT-SF-ELDWC-PE-DDBT	120	50	1	PL-T42W / 30 / 4P	THD<10%	DIE CAST SINGLE-PIECE HOUSING DARK BRONZE FINISH, DIE CAST DOOR FRAME WITH 1/8" THICK TEMPERED GLASS LENS WITH ONE-PIECE SOLID SILICONE GASKET, WIDE THROW OPTICS, COLD WEATHER EMERGENCY BATTERY PACK, PHOTOCELL, WET LABEL, SINGLE FUSE
	R3	LITHONIA	W-225-A19	120	50	2	F25T8 / TL830	THD<10%	ONE-PIECE BRUSHED ALUMINUM HOUSING, INJECTION MOLDED ENDPLATES WITH BRUSHED ALUMINUM FINISH, UP AND DOWN LIGHT, KSH-19 PRISMATIC LENSES
	R3-EM	LITHONIA	W-225-A19	120	50	2	F25T8 / TL830	THD<10%	SIMILAR TO TYPE "R3" EXCEPT WITH 1400 LUMEN EMERGENCY BALLAST AND LIFE SAFETY CODE COMPLIANT SELF DIAGNOSTICS

NOTES (DRAWING NOS. E1.5 & E1.6)

1. RELAMP ALL EXISTING FLUORESCENT FIXTURES WITH TL830 LAMPS.

REVISIONS:

This document originally issued and sealed by Walter G. Miles, P.E. No. 6740 on 02/28/07. This media should not be considered a certified document.

Master Engineers And Designers, Inc.
904 Lakeside Drive, Lynchburg, VA 24501
434-846-1330 Fax: 434-846-1331

INFORMATION TECHNOLOGY BUILDING
INFORMATION TECHNOLOGY DEPARTMENT
CITY OF LYNCHBURG, VIRGINIA
3550 YOUNG PLACE
LYNCHBURG, VIRGINIA

LIGHTING FIXTURE SCHEDULE
(Sheet 1 of 2)

DATE ISSUED:	02/15/07
SCALE:	NONE
JOB. NO.	262-187
DESIGNED:	WGM
DRAWN:	WGM
CHECKED:	WGM
APPROVED:	WGM

DRAWING NO. E1.5
SHEET 6 OF 29
REVISION

P:\262 Lynchburg City\187 Information Technology Building\Drawings\Electrical\262_187_e1.05_e1.06.dwg 2/28/2007 6:24:51 PM, PDF.pc3

LIGHTING FIXTURE SCHEDULE

TYPE	MANUFACTURER	CATALOG NUMBER *	VOLTAGE	VOLT-AMPERES (MAXIMUM)	LAMPS QTY	LAMPS TYPE **	BALLAST	DESCRIPTION
T	LITHONIA	TWH-400S-SF	120	480	1	C400S51	CWA	DIE CAST ALUMINUM HOUSING DARK BRONZE FINISH, SPECULAR ANODIZED ALUMINUM REFLECTOR, SEALED AND GASKETED PRISMATIC BOROSILICATE GLASS REFRACTOR, SINGLE FUSE
U	KIRLIN	FSR-06046-WB	120	50	1	PL-T42W / 30 / 4P	THD<10%	WALL BRACKET, SEAMLESS ALUMINUM WHITE HOUSING, ONE-PIECE LOW IRIDESCENCE SPECULAR ALZAK ALUMINUM REFLECTOR
U-EM	KIRLIN	FSR-06046-WB	120	50	1	PL-T42W / 30 / 4P	THD<10%	SIMILAR TO TYPE "U" EXCEPT WITH REMOTE EMERGENCY BATTERY PACK. INSTALL BATTERY PACK ABOVE CEILING. INSTALL TEST SWITCH AND INDICATOR LIGHT THROUGH ADJACENT CEILING TILE.
X	LITHONIA	LE-S-R-ELNSD	120	10	1	LED ARRAY	N/A	SOLID DIE CAST ALUMINUM HOUSING WITH MATTE BLACK FINISH, BRUSHED ALUMINUM STENCIL FACE, NICKEL CADMIUM BATTERY, LIFE SAFETY CODE COMPLIANT SELF-DIAGNOSTICS, ARROWS AS INDICATED ON DRAWINGS.

* => CATALOG NUMBERS ARE NOT COMPLETE. SEE VOLTAGE, BALLAST AND DESCRIPTION COLUMNS AS WELL AS SPECIFICATION SECTIONS 16510, 16511, 16512 AND 16513 FOR ADDITIONAL FEATURES.

** => LAMP CATALOG NUMBERS ARE THOSE OF THE PHILLIPS LIGHTING COMPANY

REVISIONS:

This document originally issued and sealed by Walter G. Miles, P.E. No. 6740 on 02/21/07. This media should not be considered a certified document.

Master Engineers And Designers, Inc.
904 Lakeside Drive, Lynchburg, VA 24501
434-846-1350 Fax: 434-846-1351

INFORMATION TECHNOLOGY BUILDING
INFORMATION TECHNOLOGY DEPARTMENT
CITY OF LYNCHBURG, VIRGINIA

3550 YOUNG PLACE
LYNCHBURG, VIRGINIA

LIGHTING FIXTURE SCHEDULE
(Sheet 2 of 2)

DATE ISSUED:	02/15/07
SCALE:	NONE
JOB. NO.	262-187
DESIGNED:	WGM
DRAWN:	WGM
CHECKED:	WGM
APPROVED:	WGM

DRAWING NO.
E1.6
SHEET 7 OF 29
REVISION

NOTES (DRAWING NO. E2.1)

1. WHERE EQUIPMENT IS SHOWN ON THIS DRAWING BUT NOT SHOWN ON DRAWING E2.3, IT SHALL BE REMOVED ALONG WITH UN-NEEDED, ASSOCIATED WIRING.

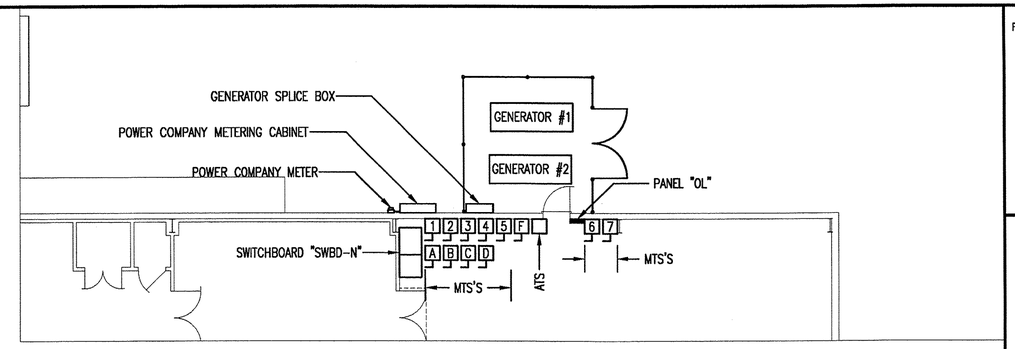

PART PLAN – SERVICE ENTRANCE

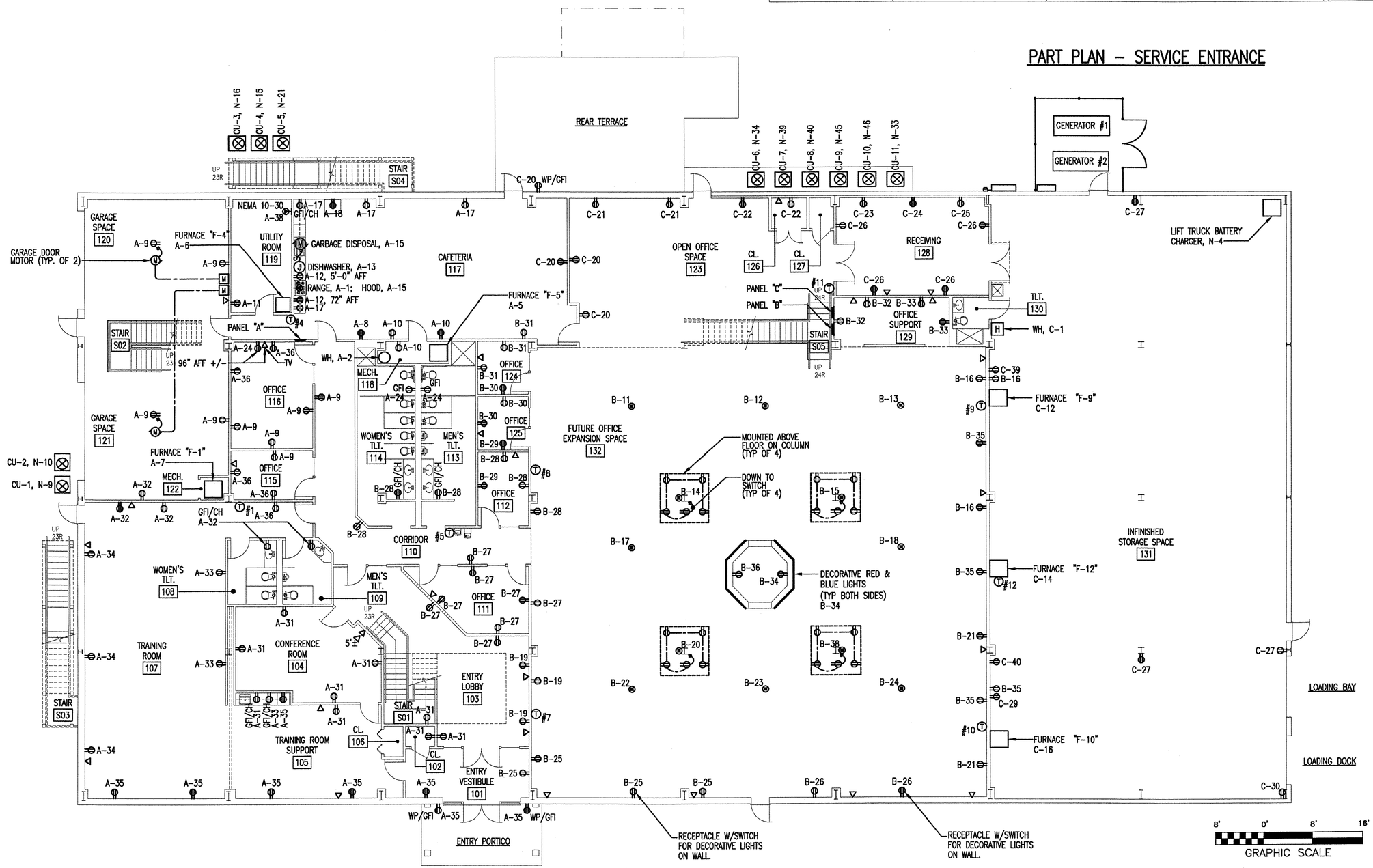

REVISIONS:

This document originally issued and sealed by Walter G. Miles, P.E. No. 6740 on 02/21/07. This media should not be considered a certified document.

Master Engineers And Designers, Inc.
904 Lakeside Drive, Lynchburg, VA 24501
434-846-1350 Fax: 434-846-1351

INFORMATION TECHNOLOGY BUILDING
INFORMATION TECHNOLOGY DEPARTMENT
CITY OF LYNCHBURG, VIRGINIA
3550 YOUNG PLACE
LYNCHBURG, VIRGINIA

POWER - LEVEL ONE
EXISTING CONDITIONS

DATE ISSUED:	02/15/07
SCALE:	GRAPHIC
JOB. NO.	262-187
DESIGNED:	WGM
DRAWN:	JND
CHECKED:	WGM
APPROVED:	WGM

DRAWING NO. E2.1

SHEET 8 OF 29

REVISION

NOTES (DRAWING NO. E2.2)

1. WHERE EQUIPMENT IS SHOWN ON THIS DRAWING BUT NOT SHOWN ON DRAWING E2.4, IT SHALL BE REMOVED ALONG WITH UN-NEEDED, ASSOCIATED WIRING.

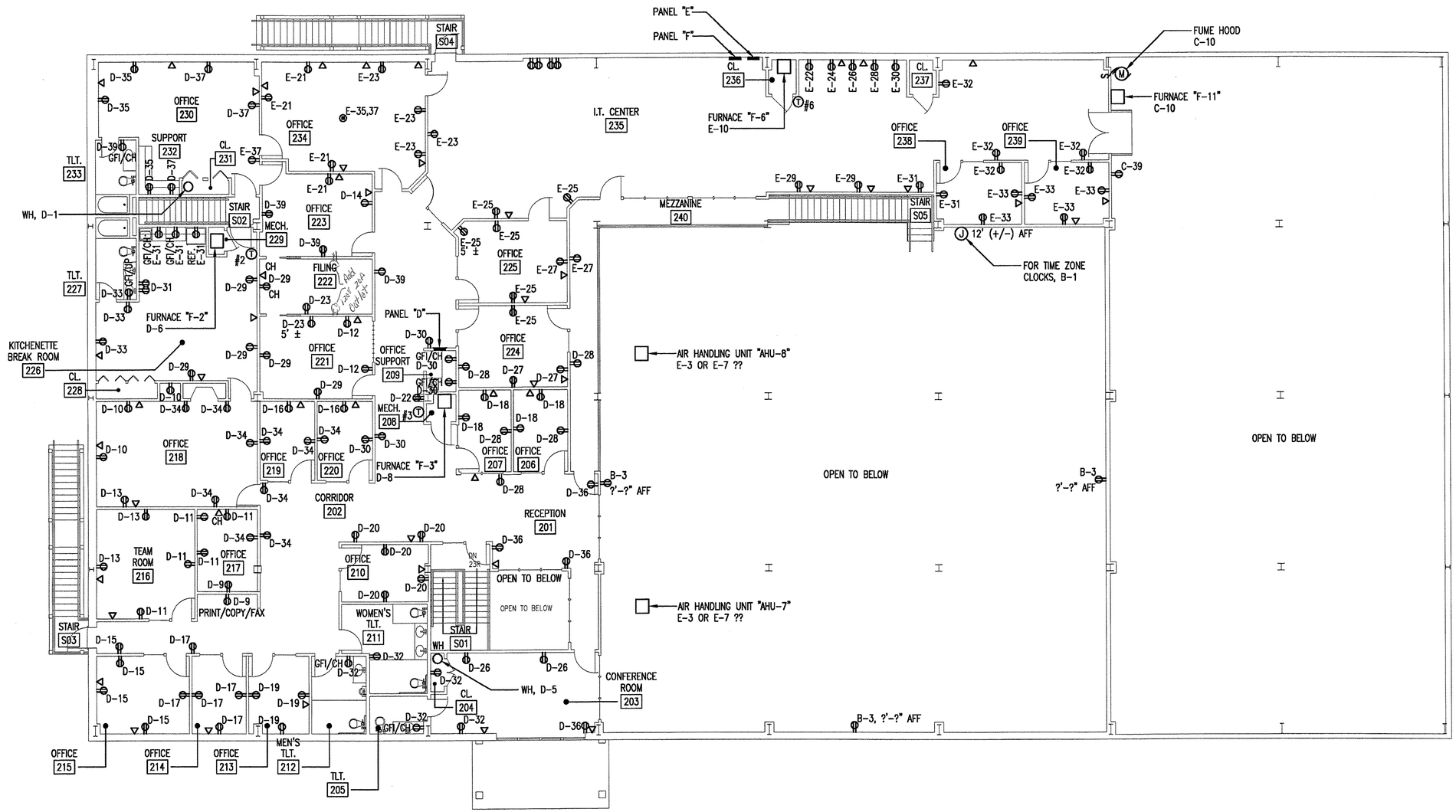

8' 0' 8' 16'
GRAPHIC SCALE

REVISIONS:

This document originally issued and sealed by Walter G. Miles, P.E. No. 6740 on 02/21/07. This media should not be considered a certified document.

Master Engineers And Designers, Inc.
904 Lakeside Drive, Lynchburg, VA 24501
434-846-1350 Fax: 434-846-1351

INFORMATION TECHNOLOGY BUILDING
INFORMATION TECHNOLOGY DEPARTMENT
CITY OF LYNCHBURG, VIRGINIA
3550 YOUNG PLACE
LYNCHBURG, VIRGINIA

POWER - LEVEL TWO
EXISTING CONDITIONS

DATE ISSUED:	02/15/07
SCALE:	GRAPHIC
JOB. NO.	262-187
DESIGNED:	WGM
DRAWN:	JND
CHECKED:	WGM
APPROVED:	WGM

DRAWING NO.
E2.2
SHEET 9 OF 29
REVISION

NOTES (DRAWING NO. E2.3)

1. EQUIPMENT SHOWN LIGHT IS EXISTING, TO REMAIN. EQUIPMENT SHOWN HEAVY IS TO BE PROVIDED AND INSTALLED UNDER THIS CONTRACT.
2. REMOVE FLOOR OUTLETS SERVED BY CIRCUITS B-11, B-12, B-13, B-14, B-15, B-17, B-18, B-20, B-22, B-23, B-24, B-34, B-36 AND B-38. REMOVE WIRING BACK TO PANELBOARD. REMOVE OUTLET BOX AND ADJACENT DATA BOX. CUT CONDUIT BACK BELOW FLOOR. PATCH FLOOR.
3. FOR CONDUIT TYPE, QUANTITY AND FILL, SEE ONE LINE DIAGRAM – REWORKED CONDITIONS.
4. COODINATE LOCATION OF DATA AND POWER FLOOR BOXES WITH OWNER IN FIELD. BOXES SHALL BE WIREMOLD/WALKER RFB SERIES.

● => CONVENIENCE OUTLET TO BE ABANDONED. REMOVE RECEPTACLE. IF WIRING IS NOT NEEDED TO KEEP DOWNSTREAM DEVICES ENERGIZED, REMOVE BACK TO PANEL (ABANDON CONDUIT IN PLACE. IF OUTLET BOX CONFLICTS WITH NEW WALLS, REMOVE BOX. IF REQUIRED, PROVIDE WIRING TO KEEP DOWNSTREAM DEVICES ENERGIZED. IF BOX IS NOT REMOVED, INSTALL BLANK COVER PLATE.

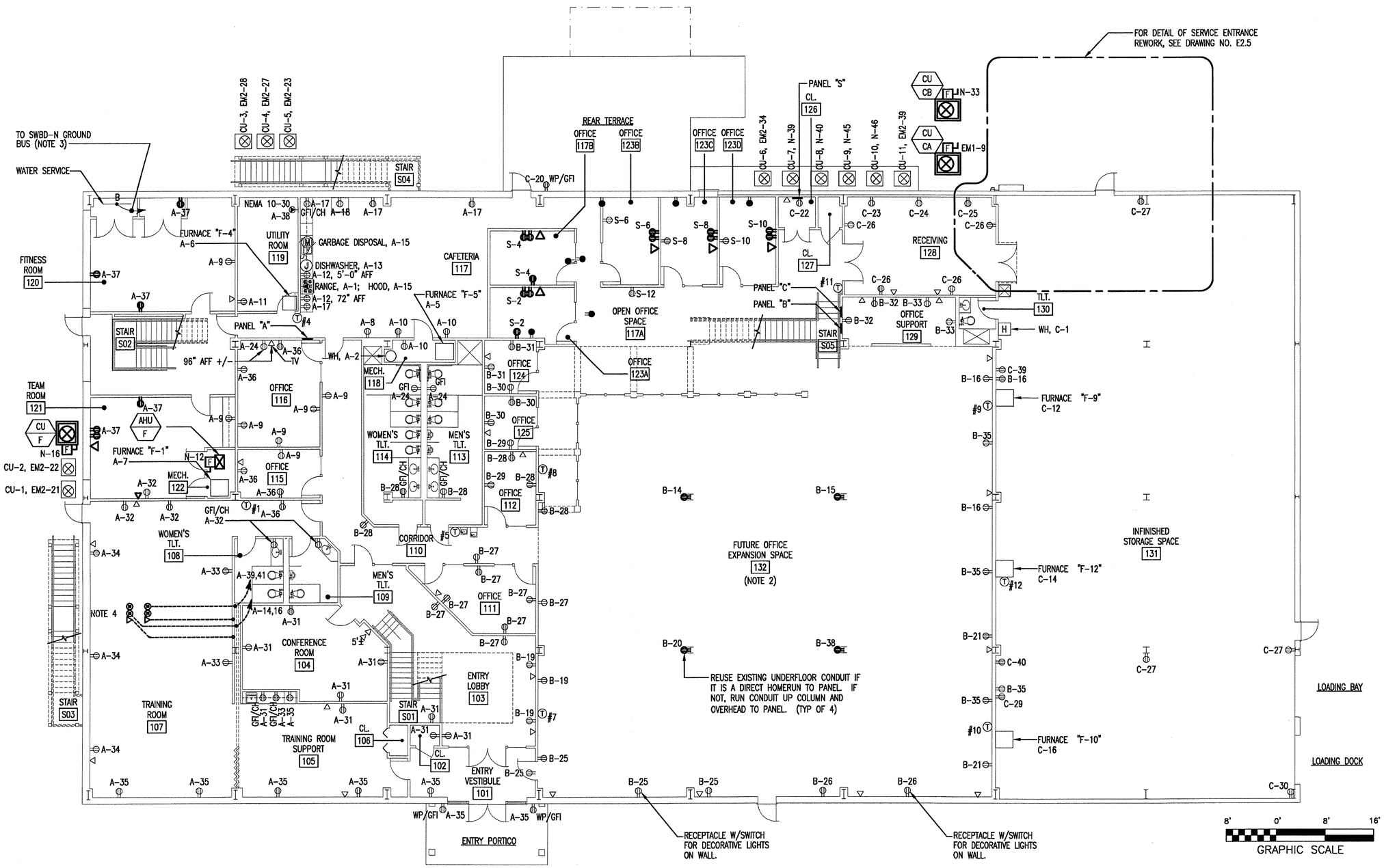

REVISIONS:

This document originally issued and sealed by Walter G. Miles, P.E. No. 6740 on 02/21/07. This media should not be considered a certified document.

Master Engineers And Designers, Inc.
904 Lakeside Drive, Lynchburg, VA 24501
434-846-1350 Fax: 434-846-1351

INFORMATION TECHNOLOGY BUILDING
INFORMATION TECHNOLOGY DEPARTMENT
CITY OF LYNCHBURG, VIRGINIA
3550 YOUNG PLACE
LYNCHBURG, VIRGINIA

POWER - LEVEL ONE
REWORKED CONDITIONS

DATE ISSUED:	02/15/07
SCALE:	GRAPHIC
JOB. NO.	262-187
DESIGNED:	WGM
DRAWN:	JND
CHECKED:	WGM
APPROVED:	WGM

DRAWING NO. E2.3

SHEET 10 OF 29

REVISION

NOTES (DRAWING NO. E2.4)

1. EQUIPMENT SHOWN LIGHT IS EXISTING, TO REMAIN. EQUIPMENT SHOWN HEAVY IS TO BE PROVIDED AND INSTALLED UNDER THIS CONTRACT.

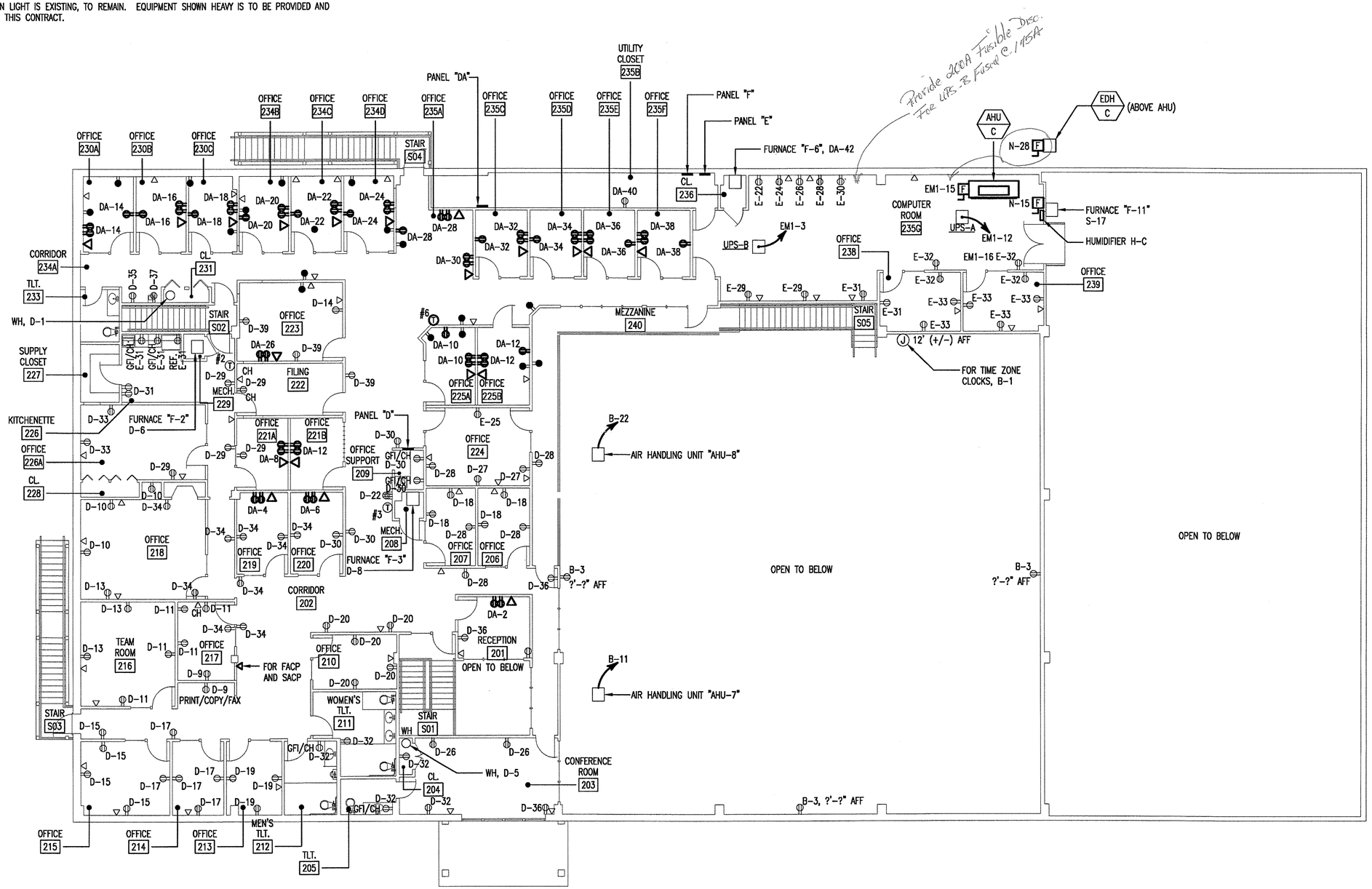

8' 0' 8' 16'
GRAPHIC SCALE

REVISIONS:

This document originally issued and sealed by Walter G. Miles, P.E. No. 6740 on 02/21/07. This media should not be considered a certified document.

Master Engineers And Designers, Inc.
904 Lakeside Drive, Lynchburg, VA 24501
434-846-1350 Fax: 434-846-1351

INFORMATION TECHNOLOGY BUILDING
INFORMATION TECHNOLOGY DEPARTMENT
CITY OF LYNCHBURG, VIRGINIA
3550 YOUNG PLACE
LYNCHBURG, VIRGINIA

POWER - LEVEL TWO
REWORKED CONDITIONS

DATE ISSUED:	02/15/07
SCALE:	GRAPHIC
JOB. NO.	262-187
DESIGNED:	WGM
DRAWN:	JND
CHECKED:	WGM
APPROVED:	WGM

DRAWING NO. E2.4

REVISION

NOTES (DRAWING NO. E2.5)

1. FOR CONDUIT TYPE, QUANTITY, SIZE AND FILL, SEE ONE LINE DIAGRAM – REWORKED CONDITIONS.
2. FOR CONDUIT TYPE, QUANTITY, SIZE, FILL AND ROUTING FOR FEEDERS, SEE ONE LINE DIAGRAM – REWORKED CONDITIONS.
3. RUN WIRING FROM SWITCHBOARD TO TRANSFER SWITCHES IN EXISTING 12" x 12" WIREWAY WHICH RUNS FROM SWITCHBOARD ALONG WALL NEAR FLOOR. REMOVE EXISTING 12" x 12" WIREWAY WHICH RUNS ABOVE EXISTING TRANSFER SWITCHES.
4. CONCRETE SHALL BE 3000 PSI.
5. RECONNECT GENERATORS TO EXISTING GAS PIPING BY USING FLEXIBLE GAS PIPING. RUN IN WATERTIGHT NON-METALLIC CONDUIT BENEATH THE GENERATOR PAD. SEE SPEC SECTION 15060 – PIPE AND PIPE FITTINGS.
6. PVC WITH WIRING AS REQUIRED BY TRANSFER SWITCH MANUFACTURER FOR GENERATOR START SIGNAL.

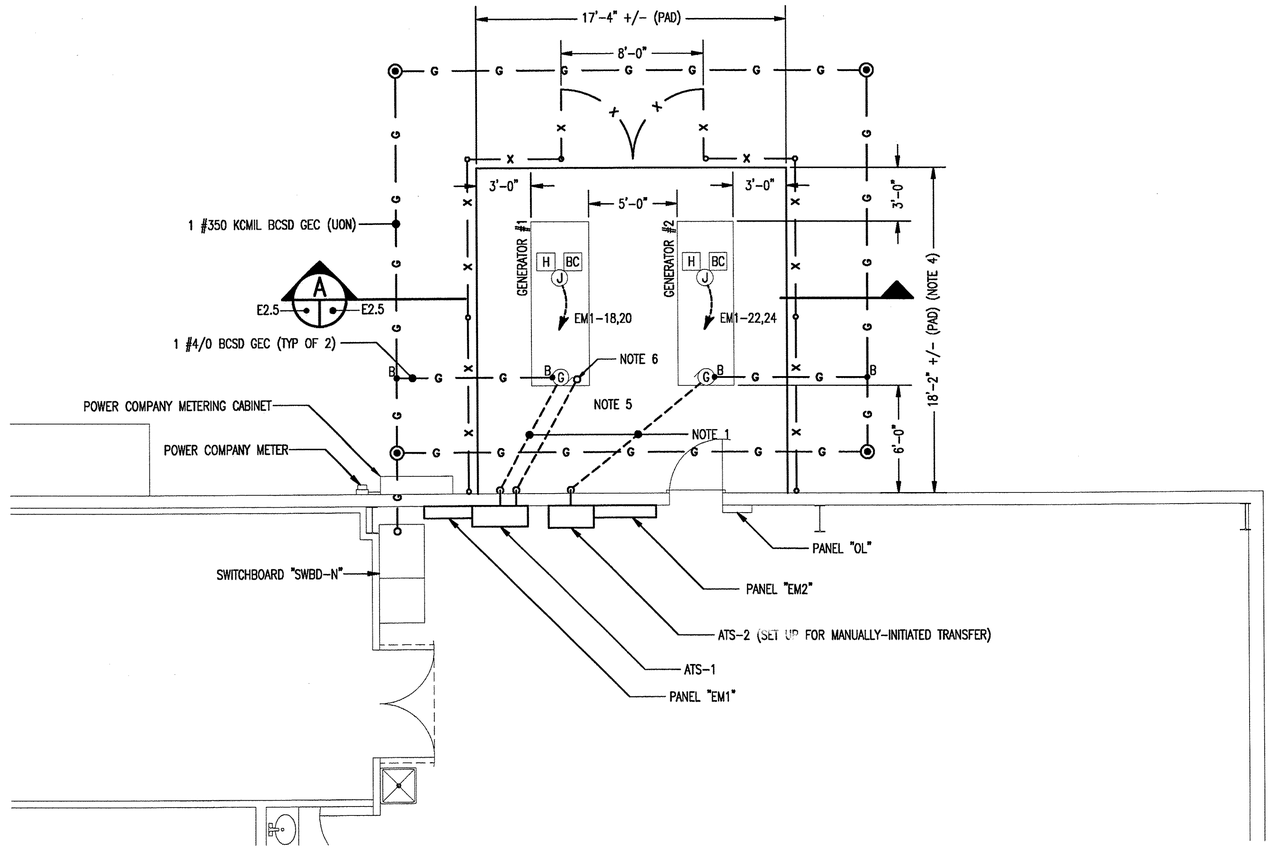

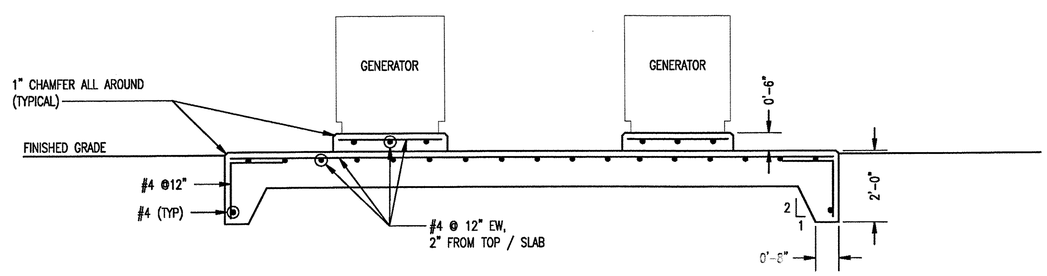

A SECTION THRU GENERATOR PAD
E2.5 E2.5
NOT TO SCALE

4' 0' 4' 8'
GRAPHIC SCALE

REVISIONS:

This document originally issued and sealed by Walter G. Miles, P.E. No. 6740 on 02/28/07. This media should not be considered a certified document.

Master Engineers And Designers, Inc.
904 Lakeside Drive, Lynchburg, VA 24501
434-946-1330 Fax: 434-946-1331

INFORMATION TECHNOLOGY BUILDING
INFORMATION TECHNOLOGY DEPARTMENT
CITY OF LYNCHBURG, VIRGINIA
3550 YOUNG PLACE
LYNCHBURG, VIRGINIA

SERVICE ENTRANCE
REWORKED CONDITIONS

DATE ISSUED:	02/15/07
SCALE:	GRAPHIC
JOB. NO.	262-187
DESIGNED:	WGM
DRAWN:	JND
CHECKED:	WGM
APPROVED:	WGM

DRAWING NO. E2.5
SHEET 12 OF 29
REVISION

P:\262 Lynchburg City\187 Information Technology Building\Drawings\Electrical\262_187_e2.05.dwg, 2/28/2007 6:26:48 PM, PDF.pc3

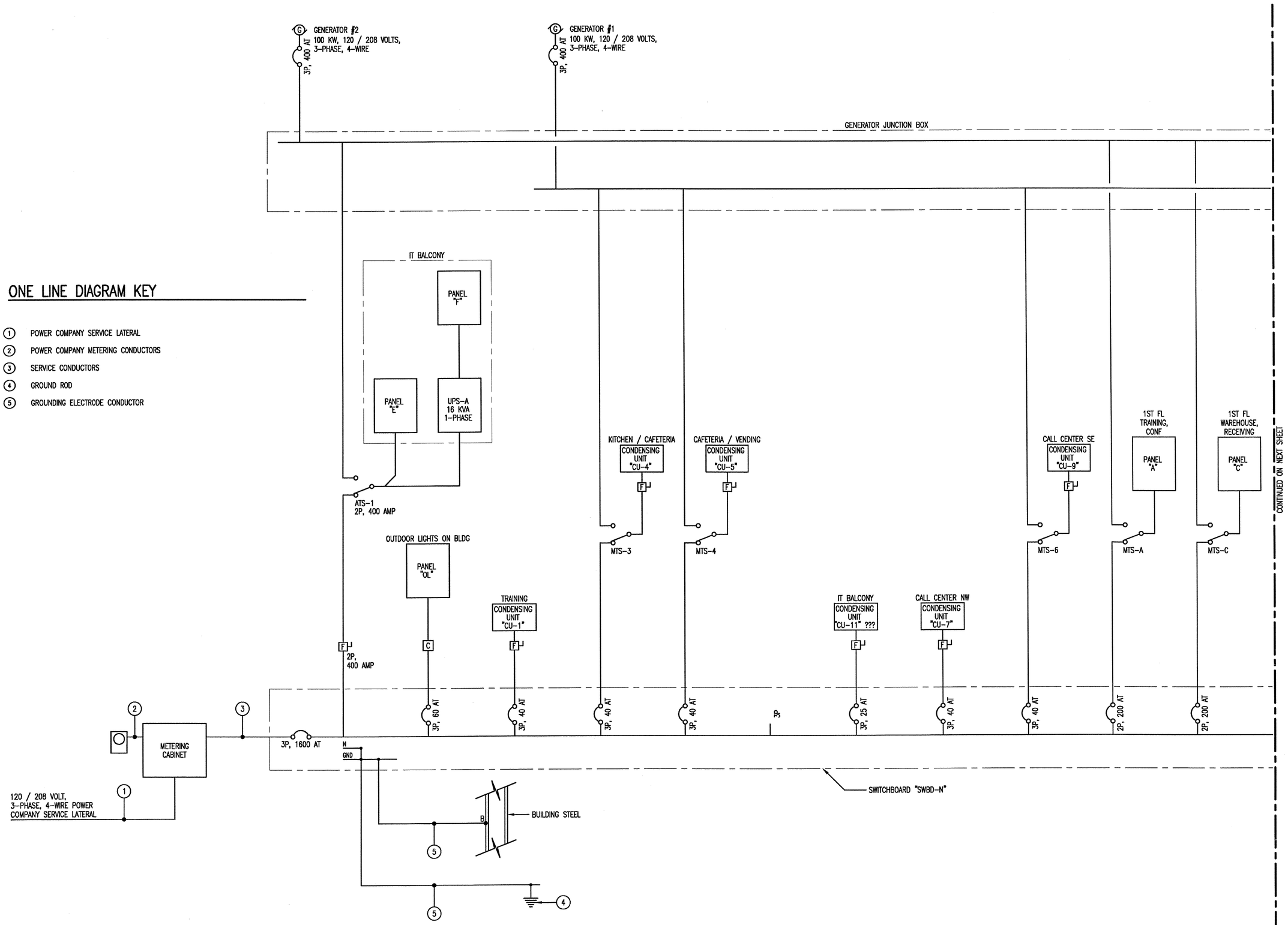

ONE LINE DIAGRAM KEY

1. POWER COMPANY SERVICE LATERAL
2. POWER COMPANY METERING CONDUCTORS
3. SERVICE CONDUCTORS
4. GROUND ROD
5. GROUNDING ELECTRODE CONDUCTOR

REVISIONS:

This document originally issued and sealed by Walter G. Miles, P.E. No. 6740 on 02/21/07. This media should not be considered a certified document.

Master Engineers And Designers, Inc.
904 Lakeside Drive, Lynchburg, VA 24501
434-846-1350 Fax: 434-846-1351

INFORMATION TECHNOLOGY BUILDING
INFORMATION TECHNOLOGY DEPARTMENT
CITY OF LYNCHBURG, VIRGINIA

3550 YOUNG PLACE
LYNCHBURG, VIRGINIA

ONE LINE DIAGRAM
EXISTING CONDITIONS
(Sheet 1 of 2)

DATE ISSUED:	02/15/07
SCALE:	NONE
JOB. NO.	262-187
DESIGNED:	WGM
DRAWN:	WGM
CHECKED:	WGM
APPROVED:	WGM

DRAWING NO.
E3.1
SHEET 13 OF 29
REVISION

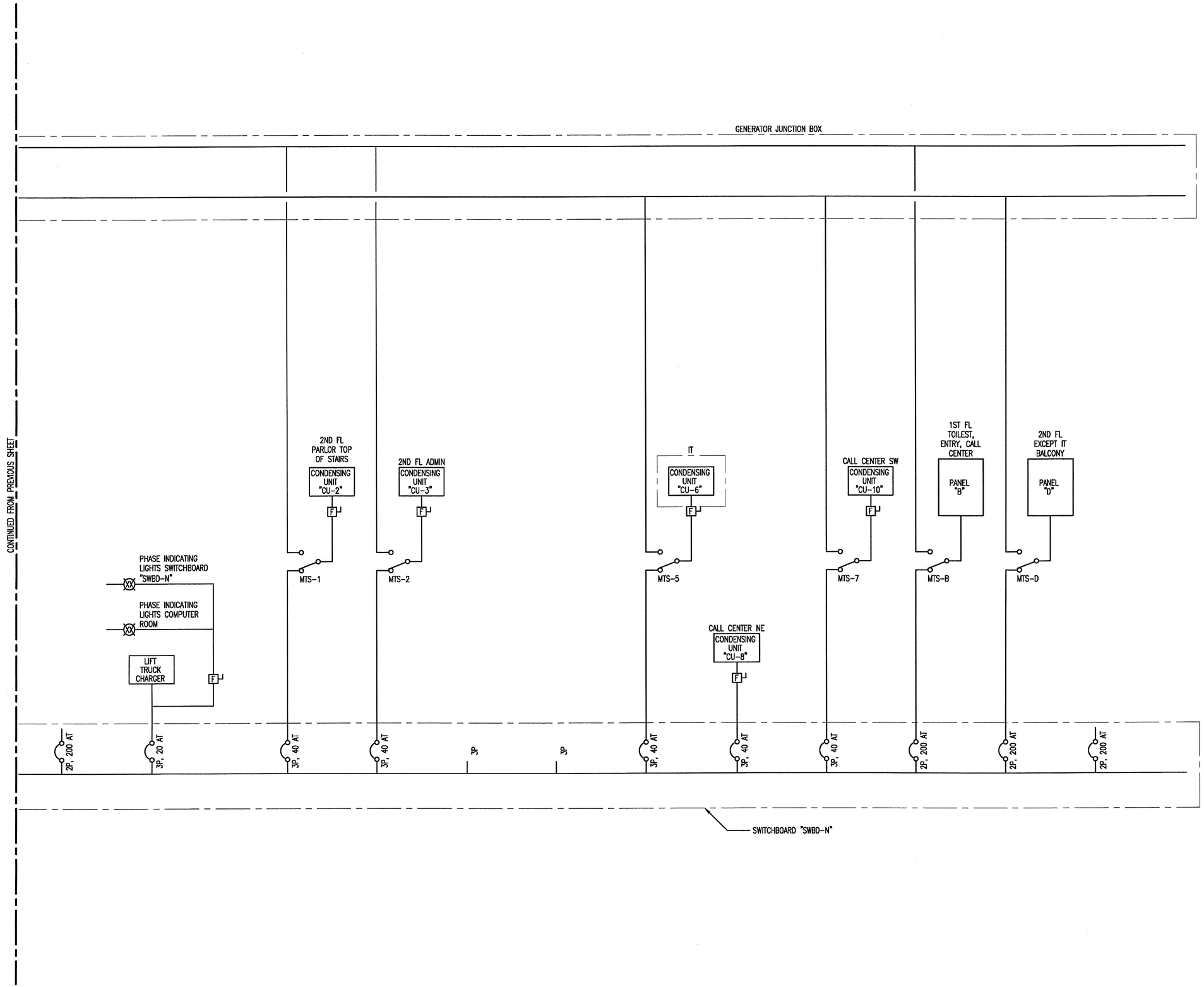

REVISIONS:

This document originally issued and sealed by Walter G. Miles, P.E. No. 6740 on 02/21/07. This media should not be considered a certified document.

Master Engineers And Designers, Inc.
904 Lakeside Drive, Lynchburg, VA 24501
434-846-1350 Fax: 434-846-1351

INFORMATION TECHNOLOGY BUILDING
INFORMATION TECHNOLOGY DEPARTMENT
CITY OF LYNCHBURG, VIRGINIA

3550 YOUNG PLACE
LYNCHBURG, VIRGINIA

ONE LINE DIAGRAM
EXISTING CONDITIONS
(Sheet 2 of 2)

DATE ISSUED:	02/15/07
SCALE:	NONE
JOB. NO.	262-187
DESIGNED:	WGM
DRAWN:	WGM
CHECKED:	WGM
APPROVED:	WGM

DRAWING NO.
E3.2
SHEET 14 OF 29
REVISION

NOTES (DRAWING NOS. E3.3 & E3.4)

1. EQUIPMENT SHOWN LIGHT IS EXISTING, TO REMAIN. EQUIPMENT SHOWN HEAVY IS TO BE PROVIDED AND INSTALLED UNDER THIS CONTRACT.
2. FOR BREAKER POLES AND TRIP SIZES, SEE ASSOCIATED EQUIPMENT SCHEDULE.
3. REPLACE EXISTING 1-PHASE PANEL WITH 3-PHASE PANEL. AT CONTRACTOR'S OPTION, EXISTING BREAKERS MAY BE RE-USED.
4. EXISTING MANUAL AND AUTOMATIC TRANSFER SWITCHES SHALL REMAIN THE PROPERTY OF THE OWNER.
5. AFTER INSTALLATION, SET UP ATS-2 FOR MANUALLY-INITIATED TRANSFER ONLY.

ONE LINE DIAGRAM KEY

1. POWER COMPANY SERVICE LATERAL
2. POWER COMPANY METERING CONDUCTORS
3. SERVICE CONDUCTORS
4. GROUND ROD
5. 1 #350 KCMIL BCSD GEC-1 1/2" PVC
6. FOR CONDUIT QUANTITY, TYPE, SIZE, AND FILL, SEE ASSOCIATED SWITCHBOARD OR PANEL SCHEDULE.
7. RUN IN EXISTING 12" X 12" WIREWAY THAT LEAVES SWITCHBOARD NEAR FLOOR.
8. 2 (4 #4/0-3" PVC) & ONE EMPTY 3" PVC
9. 2 (4 #4/0 & 1 #2 EGC-3" C)
10. 3 (4 #300 KCMIL & 1 #1/0 EGC-3" C)
11. DIE-TYPE COMPRESSION FITTING UL-APPROVED FOR SPLICING COPPER TO ALUMINUM.

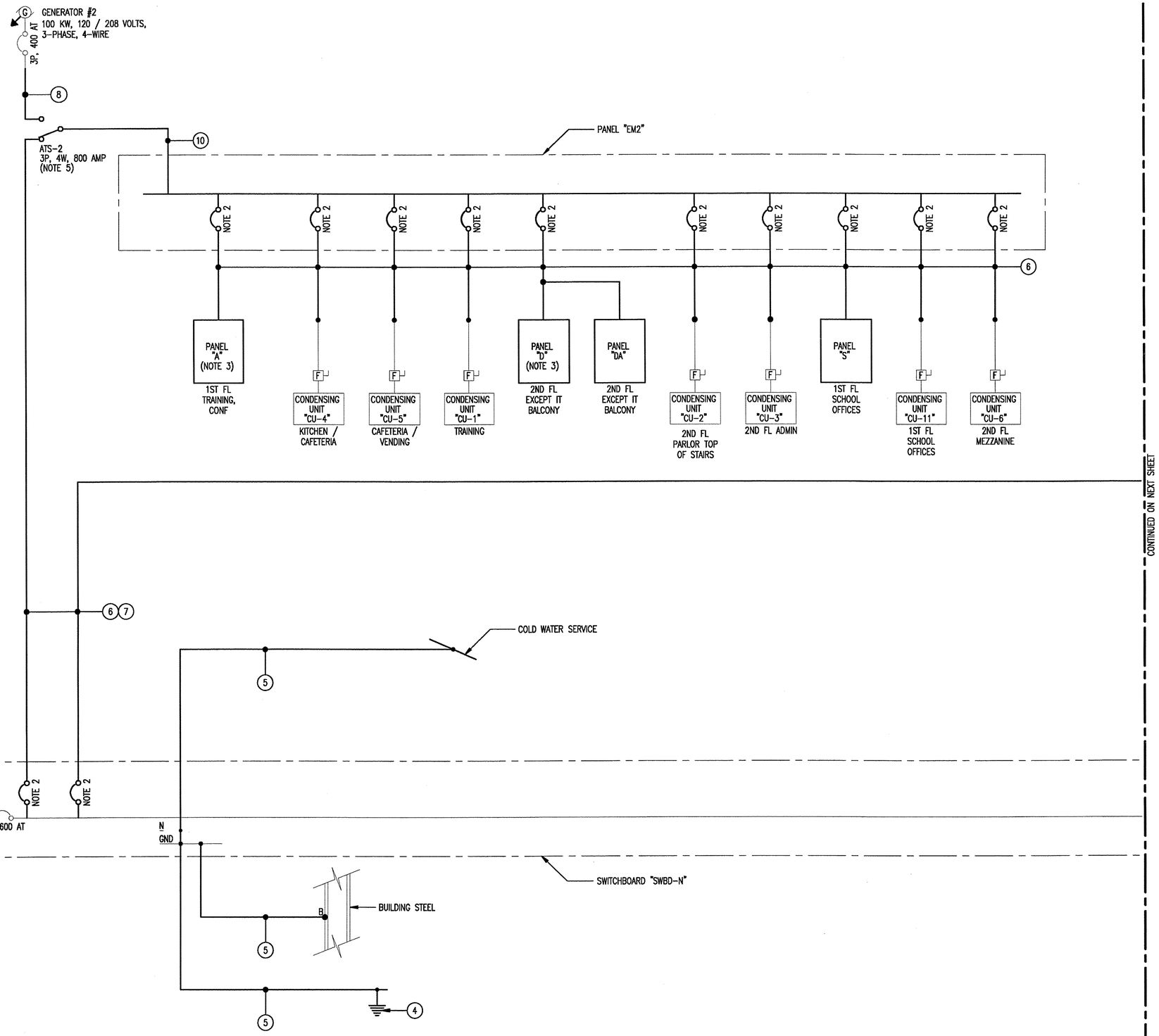

REVISIONS:

This document originally issued and sealed by Walter G. Miles, P.E. No. 6740 on 02/28/07. This media should not be considered a certified document.

Master Engineers And Designers, Inc.
904 Lakeside Drive, Lynchburg, VA 24501
434-846-1330 Fax: 434-846-1331

INFORMATION TECHNOLOGY BUILDING
INFORMATION TECHNOLOGY DEPARTMENT
CITY OF LYNCHBURG, VIRGINIA

3550 YOUNG PLACE
LYNCHBURG, VIRGINIA

ONE LINE DIAGRAM
REWORKED CONDITIONS
(Sheet 1 of 2)

DATE ISSUED:	02/15/07
SCALE:	NONE
JOB. NO.	262-187
DESIGNED:	WGM
DRAWN:	WGM
CHECKED:	WGM
APPROVED:	WGM

DRAWING NO.
E3.3
SHEET 15 OF 29
REVISION

P:\262 Lynchburg City\187 Information Technology Building\Drawings\Electrical\262_187_e3.03_e3.04.dwg, 2/28/2007 6:28:29 PM, PDF.pc3

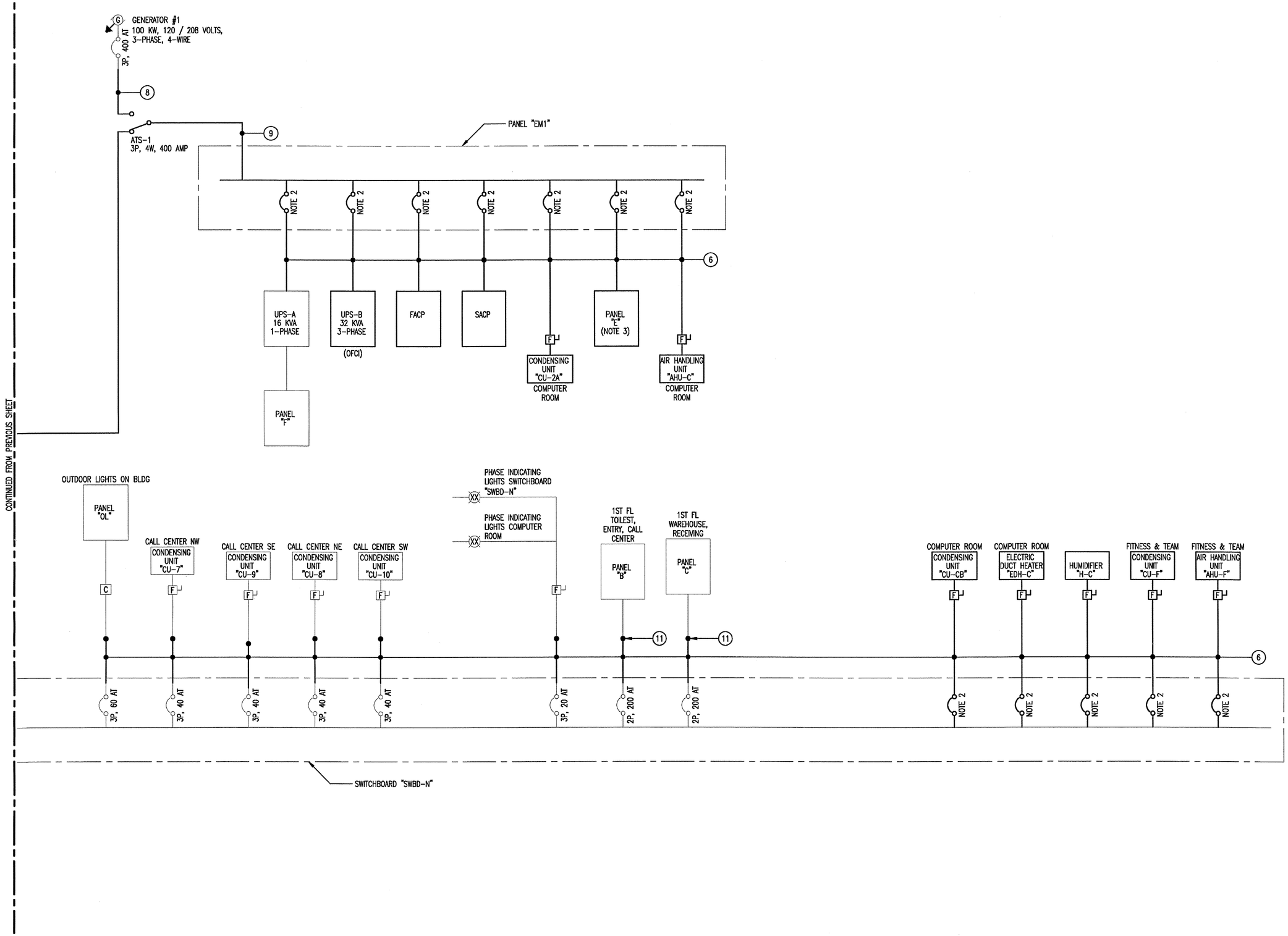

REVISIONS:

This document originally issued and sealed by Walter G. Miles, P.E. No. 6740 on 02/28/07. This media should not be considered a certified document.

Master Engineers
And Designers, Inc.
904 Lakeside Drive, Lynchburg, VA 24501
434-846-1350 Fax: 434-846-1351

INFORMATION TECHNOLOGY BUILDING
INFORMATION TECHNOLOGY DEPARTMENT
CITY OF LYNCHBURG, VIRGINIA

3550 YOUNG PLACE
LYNCHBURG, VIRGINIA

ONE LINE DIAGRAM
REWORKED CONDITIONS
(Sheet 2 of 2)

DATE ISSUED:	02/15/07
SCALE:	NONE
JOB. NO.	262-187
DESIGNED:	WGM
DRAWN:	WGM
CHECKED:	WGM
APPROVED:	WGM

DRAWING NO.
E3.4
SHEET 16 OF 29
REVISION

P:\262 Lynchburg City\187 Information Technology Building\Drawings\Electrical\262_187_e3.03_e3.04.dwg, 2/28/2007 6:29:30 PM, PDF.pc3

SWITCHBOARD "N" SCHEDULE (Existing Conditions)

PANELBOARD CHARACTERISTICS:
VOLTS: 120 / 208
PHASES: 3
WIRES: 4

SOLID NEUTRAL
GROUND BAR
MINIMUM SHORT CIRCUIT RATING: 22,000 RMS SYM AMPS

MAIN BREAKER: 1600 AMPS

LOCATION: STORAGE, 131
SERVICE ENTRANCE RATED

CKT. NO.	POLE NO.	DESCRIPTION	CONN. KVA	CONN. AMPS A	CONN. AMPS B	CONN. AMPS C	BREAKER P	BREAKER AF	BREAKER AT	NO. & WIRE SIZE PHASE	NO. & WIRE SIZE NEUT.	NO. & WIRE SIZE EGC	CONDUIT SIZE	DEMAND KVA	DEMAND AMPS A	DEMAND AMPS B	DEMAND AMPS C
	1			0.0						EXIST.					0.0		
3	3	PANEL "OL"	0.00		---		3	100	60	---	EXIST.	EXIST.	EXIST.	0.00		---	
	5					0.0				EXIST.							0.0
	7			20.9						EXIST.					20.9		
9	9	CU-1	7.52		20.9		3	100	40	EXIST.	---	EXIST.	EXIST.	7.52		20.9	
	11					20.9				EXIST.							20.9
	13			20.9						EXIST.					20.9		
15	15	CU-4 (VIA MTS-3, GEN #1)	7.52		20.9		3	100	40	EXIST.	---	EXIST.	EXIST.	7.52		20.9	
	17					20.9				EXIST.							20.9
	19			17.7						EXIST.					17.7		
21	21	CU-5 (VIA MTS-4, GEN #1)	6.37		17.7		3	100	40	EXIST.	---	EXIST.	EXIST.	6.37		17.7	
	23					17.7				EXIST.							17.7
	25																
27	27	BLANK					3	100	---								
	29																
	31			13.7						EXIST.					13.7		
33	33	CU-11	4.43		13.7		3	100	25	EXIST.	---	EXIST.	EXIST.	4.43		13.7	
	35					13.7				EXIST.							13.7
	37			20.9						EXIST.					20.9		
39	39	CU-7	7.52		20.9		3	100	40	EXIST.	---	EXIST.	EXIST.	7.52		20.9	
	41					20.9				EXIST.							20.9
	43			20.9						EXIST.					20.9		
45	45	CU-9 (VIA MTS-6, GEN #1)	7.52		20.9		3	100	40	EXIST.	---	EXIST.	EXIST.	7.52		20.9	
	47					20.9				EXIST.							20.9
49	49	PANEL "A" (VIA MTS-A, GEN #2)	51.40	232.3			2	225	200	#4/0 AL	#2/0 AL	---	EXIST.	43.60	207.3		
	51				218.7					#4/0 AL			2 1/2"			178.7	
53	53	PANEL "C" (VIA MTS-C, GEN #2)	35.48			146.0	2	225	200	#4/0 AL	#2/0 AL	---	EXIST.	26.55			106.6
	55			159.1						#4/0 AL			2 1/2"		124.1		
57	57	SPARE					2	225	200								
	59																
	2			14.0						EXIST.					14.0		
4	4	LIFT TRUCK BATTERY CHARGER	5.04		14.0		3	100	20	EXIST.	EXIST.	EXIST.	EXIST.	5.04		14.0	
	6	& PHASE INDICATING LIGHTS				14.0				EXIST.							14.0
	8			20.9						EXIST.					20.9		
10	10	CU-2 (VIA MTS-1, GEN #2)	7.52		20.9		3	100	40	EXIST.	---	EXIST.	EXIST.	7.52		20.9	
	12					20.9				EXIST.							20.9
	14			20.9						EXIST.					20.9		
16	16	CU-3 (VIA MTS-2, GEN #2)	7.52		20.9		3	100	40	EXIST.	---	EXIST.	EXIST.	7.52		20.9	
	18					20.9				EXIST.							20.9
	20																
22	22	SPACE & BUS ONLY					3	100	---								
	24																
	26																
28	28	BLANK					3	100	---								
	30																
	32			20.9						EXIST.					20.9		
34	34	CU-6 (VIA MTS-5, GEN #1)	7.52		20.9		3	100	40	EXIST.	---	EXIST.	EXIST.	7.52		20.9	
	36					20.9				EXIST.							20.9
	38			20.9						EXIST.					20.9		
40	40	CU-8	7.52		20.9		3	100	40	EXIST.	---	EXIST.	EXIST.	7.52		20.9	
	42					20.9				EXIST.							20.9
	44			20.9						EXIST.					20.9		
46	46	CU-10 (VIA MTS-7, GEN #1)	7.52		20.9		3	100	40	EXIST.	---	EXIST.	EXIST.	7.52		20.9	
	48					20.9				EXIST.							20.9
50	50	PANEL "B" (VIA MTS-B, GEN #2)	46.08	203.6			2	225	200	#4/0 AL	#2/0 AL	EXIST.	EXIST.	29.28	144.6		
	52				180.3					#4/0 AL			2 1/2"			111.3	
54	54	PANEL "D" (VIA MTS-D, GEN #1)	55.12			250.8	2	225	200	#4/0 AL	#2/0 AL	EXIST.	EXIST.	41.32			195.8
	56			220.4						#4/0 AL			2 1/2"		160.4		
58	58	SPARE					2	225	200								
	60																
		PANEL "E"	31.77	121.0			FED FROM LOAD LUGS OF			#4/0 AL					81.0		
					---					---	#2/0 AL	---	EXIST.	22.17		---	
						148.3				#4/0 AL							108.3
		UPS	16.64	80.0			MAIN BREAKER VIA ATS-1			#4/0 AL					80.0		
					---					---	#2/0 AL	---	EXIST.	16.64		---	
						80.0				#4/0 AL							80.0
		TOTALS	320.01	1249.9	632.5	858.6	NOTE: ALUMINUM WIRE HAS THHW-2 INSULATION							263.08	1030.9	523.5	724.2

LOAD SUMMARY – (Existing Conditions)

CONNECTED KVA BY LOAD TYPE

LIGHTS	RECEPTACLES	SPACE HEATING	SPACE COOLING	VENTILATION	WATER HEATING	COOKING	DATA PROCESSING	TOTAL KVA
60.46	110.40	1.13	92.33	1.20	20.60	17.25	16.64	320.01

DEMAND KVA BY LOAD TYPE

LIGHTS	RECEPTACLES	SPACE HEATING	SPACE COOLING	VENTILATION	WATER HEATING	COOKING	DATA PROCESSING	TOTAL KVA
60.46	60.20	1.13	92.33	1.20	20.60	17.25	16.64	269.81

GENERATOR #1 LOAD SUMMARY (Existing Conditions)

DESCRIPTION	CONN. KVA	CONN. AMPS A	CONN. AMPS B	CONN. AMPS C
CU-4 (VIA MTS-3, GEN #1)	7.52	20.9		
			20.9	
				20.9
CU-5 (VIA MTS-4, GEN #1)	6.37	17.7		
			17.7	
				17.7
CU-9 (VIA MTS-6, GEN #1)	7.52	20.9		
			20.9	
				20.9
CU-6 (VIA MTS-5, GEN #1)	7.52	20.9		
			20.9	
				20.9
CU-10 (VIA MTS-7, GEN #1)	7.52	20.9		
			20.9	
				20.9
PANEL "D" (VIA MTS-D, GEN #1)	55.12	250.8		

				220.4
TOTALS	91.57	352.1	101.3	321.7

GENERATOR #2 LOAD SUMMARY (Existing Conditions)

DESCRIPTION	CONN. KVA	CONN. AMPS A	CONN. AMPS B	CONN. AMPS C
PANEL "A" (VIA MTS-A, GEN #2)	51.40	232.3		

				218.7
PANEL "C" (VIA MTS-C, GEN #2)	35.48	146.0		

				159.1
CU-2 (VIA MTS-1, GEN #2)	7.52	20.9		
			20.9	
				20.9
CU-3 (VIA MTS-2, GEN #2)	7.52	20.9		
			20.9	
				20.9
PANEL "B" (VIA MTS-B, GEN #2)	46.08	203.6		

				180.3
PANEL "E"	31.77	121.0		

				148.3
UPS	16.64	80.0		

				80.0
TOTALS	196.41	824.7	41.8	828.2

REVISIONS:

This document originally issued and sealed by Walter G. Miles, P.E. No. 6740 on 02/21/07. This media should not be considered a certified document.

Master Engineers And Designers, Inc.
904 Lakeside Drive, Lynchburg, VA 24501
434-846-1350 Fax: 434-846-1351

INFORMATION TECHNOLOGY BUILDING
INFORMATION TECHNOLOGY DEPARTMENT
CITY OF LYNCHBURG, VIRGINIA
3550 YOUNG PLACE
LYNCHBURG, VIRGINIA

PANEL SCHEDULES
(Sheet 1 of 11)

DATE ISSUED: 02/15/07
SCALE: NONE
JOB. NO. 262-187
DESIGNED: WGM
DRAWN: WGM
CHECKED: WGM
APPROVED: WGM

DRAWING NO.
E4.1
SHEET 17 OF 29
REVISION

SWITCHBOARD "N" SCHEDULE (Reworked Conditions)

PANELBOARD CHARACTERISTICS:

VOLTS: 120 / 208
PHASES: 3
WIRES: 4

SOLID NEUTRAL
GROUND BAR
MINIMUM SHORT CIRCUIT RATING: 22,000 RMS SYM AMPS

MAIN BREAKER: 1600 AMPS

LOCATION: STORAGE, 131
SERVICE ENTRANCE RATED

CKT. NO.	POLE NO.	DESCRIPTION	CONN. KVA	CONN. AMPS A	CONN. AMPS B	CONN. AMPS C	BREAKER P	BREAKER AF	BREAKER AT	NO. & WIRE SIZE PHASE	NO. & WIRE SIZE NEUT.	NO. & WIRE SIZE EGC	CONDUIT SIZE	DEMAND KVA	DEMAND AMPS A	DEMAND AMPS B	DEMAND AMPS C
3	1	PANEL "OL"	2.40	12.0			3	100	60	#6	#6	#10	1"	2.40	12.0		
	3				---					---						---	
	5					8.0				#6							8.0
9	7	PANEL "EM1" (VIA "ATS-1")	111.39	345.3			3	400	400	2 #4/0	2 #4/0	1 #2	WIREWAY	105.39	325.3		
	9				255.0					2 #4/0						240.0	
	11					349.3				2 #4/0							334.3
13	13																
15	15	HUMIDIFIER "H-C"	2.76		13.3		3	100	20	#12	---	#12	3/4"	2.76		13.3	
	17	(SERVES COMPUTER ROOM)				13.3				#12							13.3
21	19	BLANK															
	21																
	23																
27	25	BLANK					3	100	---								
	27																
	29																
33	31	CONDENSING UNIT "CU-CB"	9.55	26.5			3	100	70	#8	---	#8	1"	9.55	26.5		
	33	(SERVES COMPUTER ROOM)			26.5					#8						26.5	
	35					26.5				#8							26.5
39	37	CONDENSING UNIT "CU-7"	7.52	20.9			3	100	40	#8	---	#10	1"	7.52	20.9		
	39	(SERVES CALL CENTER NW)			20.9					#8						20.9	
	41					20.9				#8							20.9
45	43	CONDENSING UNIT "CU-9"	7.52	20.9			3	100	40	#8	---	#10	1"	7.52	20.9		
	45	(SERVES CALL CENTER SE)			20.9					#8						20.9	
	47					20.9				#8							20.9
49	49	SPARE					2	225	200								
	51																
53	53	PANEL "C"	31.35			126.6	2	225	200	#4/0	#4/0	#6	2 1/2"	24.15			101.6
	55			144.1						#4/0					109.1		
57	57	SPARE					2	225	200								
	59																
4	2	PHASE INDICATING LIGHTS	---	---			3	100	20	#12	#12	#12	3/4"	---	---		
	4				---					#12						---	
	6					---				#12							---
8	8	BLANK															
	10																
12	12	AHU-F (SERVES FITNESS & TEAM)	0.09			0.7	1	100	15	#12	#12	#12	3/4"	0.09			0.7
16	14	CONDENSING UNIT "CU-F"	5.32	14.8			3	100	40	#10	---	#10	3/4"	5.32	14.8		
	16	(SERVES FITNESS & TRAINING)			14.8					#10						14.8	
	18					14.8				#10							14.8
22	20	PANEL "EM2" (VIA "ATS-2")	207.36	625.7			3	800	800	3 #300	3 #300	1 #1/0	WIREWAY	166.26	515.7		
	22				624.5					3 #300						504.5	
	24					515.8				3 #300							403.3
28	26	ELECTRIC DUCT HEATER "EDH-C"	40.00	111.1			3	225	150	#1/0	---	#6	2"	40.00	111.1		
	28	(SERVES COMPUTER ROOM)			111.1					#1/0						111.1	
	30					111.1				#1/0							111.1
34	32	SPARE					3	100	40								
	34																
	36																
40	38	CONDENSING UNIT "CU-8 "	7.52	20.9			3	100	40	#8	---	#10	1"	7.52	20.9		
	40	(SERVES CALL CENTER NE)			20.9					#8						20.9	
	42					20.9				#8							20.9
46	44	CONDENSING UNIT "CU-10 "	7.52	20.9			3	100	40	#8	---	#10	1"	7.52	20.9		
	46	(SERVES CALL CENTER SW)			20.9					#8						20.9	
	48					20.9				#8							20.9
50	50	PANEL "B"	36.56	159.5			2	225	200	#4/0	#4/0	#6	2 1/2"	25.76	123.5		
	52				149.6					#4/0						104.6	
54	54	SPARE					2	225	200								
	56																
58	58	SPARE					2	225	200								
	60																
		TOTALS	476.86	1522.6	1278.4	1249.7								411.76	1321.6	1098.4	1097.2

NOTE: DURING BIDDING, HAVE CUTLER-HAMMER ENGINEER VERIFY THAT SWITCHBOARD CAN BE MODIFIED AS SHOWN. IF IT CAN NOT BE MODIFIED AS SHOWN, INCLUDE ITS REPLACEMENT IN BID. EXISTING BREAKERS MAY BE REUSED.

LOAD SUMMARY – (Reworked Conditions)

CONNECTED KVA BY LOAD TYPE

LIGHTS	RECEPTACLES	SPACE HEATING	SPACE COOLING	VENTILATION	WATER HEATING	COOKING	DATA PROCESSING	TOTAL KVA
62.88	127.20	8.69	162.88	1.20	20.60	17.25	76.16	476.86

DEMAND KVA BY LOAD TYPE

LIGHTS	RECEPTACLES	SPACE HEATING	SPACE COOLING	VENTILATION	WATER HEATING	COOKING	DATA PROCESSING	TOTAL KVA
62.88	68.60	8.69	162.88	1.20	20.60	17.25	76.16	418.26

REVISIONS:

This document originally issued and sealed by Walter G. Miles, P.E. No. 6740 on 02/28/07. This media should not be considered a certified document.

Master Engineers And Designers, Inc.
9014 Lakeside Drive, Lynchburg, VA 24501
434-846-1330 Fax: 434-846-1331

INFORMATION TECHNOLOGY BUILDING
INFORMATION TECHNOLOGY DEPARTMENT
CITY OF LYNCHBURG, VIRGINIA

3550 YOUNG PLACE
LYNCHBURG, VIRGINIA

PANEL SCHEDULES
(Sheet 2 of 11)

DATE ISSUED: 02/15/07
SCALE: NONE
JOB. NO. 262-187
DESIGNED: WGM
DRAWN: WGM
CHECKED: WGM
APPROVED: WGM

DRAWING NO.
E4.2
SHEET 18 OF 29
REVISION

P:\262 Lynchburg City\187 Information Technology Building\Drawings\Electrical\262_187_e4.01_thru_4.11.dwg, 2/28/2007 6:31:10 PM, PDF.pc3

PANEL "EM1" SCHEDULE

PANELBOARD CHARACTERISTICS:

VOLTS: 120 / 208 — SOLID NEUTRAL — MAIN LUGS: 800 AMPS — LOCATION: STORAGE, 131

PHASES: 3 — GROUND BAR

WIRES: 4 — MINIMUM SHORT CIRCUIT RATING: 22,000 RMS SYM AMPS

CKT. NO.	POLE NO.	DESCRIPTION	CONN. KVA	CONN. AMPS A	CONN. AMPS B	CONN. AMPS C	BREAKER P	BREAKER AF	BREAKER AT	NO. & WIRE SIZE PHASE	NO. & WIRE SIZE NEUT.	NO. & WIRE SIZE EGC	CONDUIT SIZE	DEMAND KVA	DEMAND AMPS A	DEMAND AMPS B	DEMAND AMPS C
	1			162.0						#4/0					162.0		
3	3	UPS-B (APC PART NUMBER SY30K40F)	58.32		162.0		3	225	200	#4/0	#4/0	#4	3"	58.32		162.0	
	5					162.0				#4/0							162.0
	7			26.5						#8					26.5		
9	9	CONDENSING UNIT "CU-CA"	9.55		26.5		3	100	70	#8	---	#10	1"	9.55		26.5	
	11	(SERVES COMPUTER ROOM)				26.5				#8							26.5
	13			16.8						#10					16.8		
15	15	AIR HANDLING UNIT "AHU-C" (5 HP)	6.04		16.8		3	100	50	#10	---	#10	3/4"	6.04		16.8	
	17	(SERVES COMPUTER ROOM)				16.8				#10							16.8
19	19	SPARE					1	100	20								
21	21	"					1	100	20								
23	23	"					1	100	20								
	25	SPACE & BUS ONLY					1	100									
	27	"					"	"									
	29	"					"	"									
	31	"					"	"									
	33	"					"	"									
	35	"					"	"									
	37	"					"	"									
	39	"					"	"									
	41	"					"	"									
	2			40.0						#4/0					20.0		
4	4	PANEL "E"	14.84		39.7		3	225	225	#4/0	#4/0	#4	2 1/2"	8.84		24.7	
	6					44.0				#4/0							29.0
8	8	FACP	0.60	5.0			1	100	20	#12	#12	#12	3/4"	0.60	5.0		
10	10	SACP	0.60		5.0		1	100	20	#12	#12	#12	3/4"	0.60		5.0	
12	12	UPS-A (16 KVA OUTPUT)	16.64			80.0	2	100	100					16.64			80.0
	14			80.0											80.0		
16	16	SPARE					1	100	20								
18	18	GENERATOR #1 BATTERY CHARGER	0.60			5.0	1	100	20	#12	#12	#12	3/4"	0.60			5.0
20	20	GENERATOR #1 BLOCK HEATER	1.80	15.0			1	100	20	#12	#12		PVC	1.80	15.0		
22	22	GENERATOR #2 BATTERY CHARGER	0.60		5.0		1	100	20	#12	#12	#12	3/4"	0.60		5.0	
24	24	GENERATOR #2 BLOCK HEATER	1.80			15.0	1	100	20	#12	#12		PVC	1.80			15.0
	26	SPACE & BUS ONLY					1	100									
	28	"					"	"									
	30	"					"	"									
	32	"					"	"									
	34	"					"	"									
	36	"					"	"									
	38	"					"	"									
	40	"					"	"									
	42	"					"	"									
		TOTALS	111.39	345.3	255.0	349.3								105.39	325.3	240.0	334.3

PANEL "EM2" SCHEDULE

PANELBOARD CHARACTERISTICS:

VOLTS: 120 / 208 — SOLID NEUTRAL — MAIN LUGS: 800 AMPS — LOCATION: STORAGE, 131

PHASES: 3 — GROUND BAR

WIRES: 4 — MINIMUM SHORT CIRCUIT RATING: 22,000 RMS SYM AMPS

CKT. NO.	POLE NO.	DESCRIPTION	CONN. KVA	CONN. AMPS A	CONN. AMPS B	CONN. AMPS C	BREAKER P	BREAKER AF	BREAKER AT	NO. & WIRE SIZE PHASE	NO. & WIRE SIZE NEUT.	NO. & WIRE SIZE EGC	CONDUIT SIZE	DEMAND KVA	DEMAND AMPS A	DEMAND AMPS B	DEMAND AMPS C
	1			196.0						#4/0					166.0		
3	3	PANEL "A"	58.21		186.9		3	225	225	#4/0	#4/0	#4	3"	46.51		156.9	
	5					124.8				#4/0							87.3
	7			31.4						#2					21.4		
9	9	PANEL "S"	11.30		33.1		3	225	100	#2	#2	#8	1 1/2"	7.70		23.1	
	11					29.4				#2							19.4
	13																
15	15	SPACE & BUS ONLY					3	225	---								
	17																
	19			20.9						#6					20.9		
21	21	CONDENSING UNIT "CU-1 "	7.52		20.9		3	100	40	#6	---	#8	1"	7.52		20.9	
	23	(SERVES TRAINING ROOM)				20.9				#6							20.9
	25			20.9						#6					20.9		
27	27	CONDENSING UNIT "CU-4 "	7.52		20.9		3	100	40	#6	---	#8	1"	7.52		20.9	
	29	(SERVES KITCHEN & CAFETERIA)				20.9				#6							20.9
	31			17.7						#6					17.7		
33	33	CONDENSING UNIT "CU-5 "	6.37		17.7		3	100	40	#6	---	#8	1"	6.37		17.7	
	35	(SERVES KITCHEN)				17.7				#6							17.7
	37			13.7						#8					13.7		
39	39	CONDENSING UNIT "CU-11"	4.43		13.7		3	100	25	#8	---	#10	1"	4.43		13.7	
	41	(SERVES SCHOOL)				13.7				#8							13.7
	2																
4	4	SPACE & BUS ONLY					3	225	---								
	6																
	8			262.4						#350					192.4		
10	10	PANEL "D" & "DA"	89.45		268.6		3	400	300	#350	#350	#4	3 1/2"	63.65		188.6	
	12					225.7				#350							160.7
	14																
16	16	SPACE & BUS ONLY					3	225	---								
	18																
	20			20.9						#6					20.9		
22	22	CONDENSING UNIT "CU-2 "	7.52		20.9		3	100	40	#6	---	#8	1"	7.52		20.9	
	24	(SERVES 2ND FLOOR FRONT)				20.9				#6							20.9
	26			20.9						#6					20.9		
28	28	CONDENSING UNIT "CU-3 "	7.52		20.9		3	100	40	#6	---	#8	1"	7.52		20.9	
	30	(SERVES 2ND FLOOR REAR)				20.9				#6							20.9
	32			20.9						#6					20.9		
34	34	CONDENSING UNIT "CU-6"	7.52		20.9		3	100	40	#6	---	#8	1"	7.52		20.9	
	36	(SERVES 2ND FLOOR BALCONY)				20.9				#6							20.9
	38																
40	40	SPACE & BUS ONLY					3	100	---								
	42																
		TOTALS	207.36	625.7	624.5	515.8								166.26	515.7	504.5	403.3

NOTE: OWNER WILL MANUALLY SHED LOAD TO PREVENT GENERATOR OVERLOAD

REVISIONS:

This document originally issued and sealed by Walter G. Miles, P.E. No. 6740 on 02/28/07. This media should not be considered a certified document.

Master Engineers And Designers, Inc.
904 Lakeside Drive, Lynchburg, VA 24501
434-846-1350 Fax: 434-846-1351

INFORMATION TECHNOLOGY BUILDING
INFORMATION TECHNOLOGY DEPARTMENT
CITY OF LYNCHBURG, VIRGINIA

3550 YOUNG PLACE
LYNCHBURG, VIRGINIA

PANEL SCHEDULES
(Sheet 2 of 11)

DATE ISSUED:	02/15/07
SCALE:	NONE
JOB. NO.	262-187
DESIGNED:	WGM
DRAWN:	WGM
CHECKED:	WGM
APPROVED:	WGM

DRAWING NO. E4.3

SHEET 19 OF 29

REVISION

P:\262 Lynchburg City\187 Information Technology Building\Drawings\Electrical\262_187_e4.01_thru_4.11.dwg, 2/28/2007 6:31:57 PM, PDF.pc3

PANEL "A" SCHEDULE (Existing Conditions)

PANELBOARD CHARACTERISTICS:
VOLTS: 120/208
PHASES: 1
WIRES: 3
SOLID NEUTRAL, GROUND BAR

MAIN LUGS: 200 AMPS
MINIMUM SHORT CIRCUIT RATING: 10,000 RMS SYM AMPS
LOCATION: KITCHEN, 117

CKT. NO.	POLE NO.	DESCRIPTION	CONN. KVA	CONN. AMPS L1	CONN. AMPS L2	BREAKER P	BREAKER AF	BREAKER AT	NO. & WIRE SIZE PHASE	NO. & WIRE SIZE NEUT.	NO. & WIRE SIZE EGC	CONDUIT SIZE	DEMAND KVA	DEMAND AMPS L1	DEMAND AMPS L2
1	1	RANGE: 117	8.32	40.0		2	100	50	EXIST.	EXIST.	EXIST.	EXIST.	8.32	40.0	
	3				40.0				EXIST.						40.0
5	5	FURNACE F-5 (1/2 HP ASSUMED)	1.13	9.4		1	100	20	EXIST.	EXIST.	EXIST.	EXIST.	1.13	9.4	
7	7	FURNACE F-1 (1/2 HP ASSUMED)	1.13		9.4	1	100	20	EXIST.	EXIST.	EXIST.	EXIST.	1.13		9.4
9	9	REC: 110, 115, 116, 120, 121	1.20	10.0		1	100	20	EXIST.	EXIST.	EXIST.	EXIST.	0.60	5.0	
11	11	REC: 119, EGRESS LIGHT 120, LIGHT S02	1.20		10.0	1	100	20	EXIST.	EXIST.	EXIST.	EXIST.	0.60		5.0
13	13	DISHWASHER	1.13	9.4		1	100	20	EXIST.	EXIST.	EXIST.	EXIST.	1.13	9.4	
15	15	GARBAGE DISPOSAL & RANGE HOOD	1.13		9.4	1	100	20	EXIST.	EXIST.	EXIST.	EXIST.	1.13		9.4
17	17	REC: 117	1.20	10.0		1	100	20	EXIST.	EXIST.	EXIST.	EXIST.	0.60	5.0	
19	19	REC: 119 / MICROWAVE	1.20		10.0	1	100	20	EXIST.	EXIST.	EXIST.	EXIST.	0.60		5.0
21	21	LIGHTS: 103, 110	1.68	14.0		1	100	20	EXIST.	EXIST.	EXIST.	EXIST.	1.68	14.0	
23	23	LIGHTS: 103, 110	1.20	0.0	10.0	1	100	20	EXIST.	EXIST.	EXIST.	EXIST.	1.20	0.0	10.0
25	25	LIGHTS: 105, 107	1.92	16.0		1	100	20	EXIST.	EXIST.	EXIST.	EXIST.	1.92	16.0	
27	27	LIGHTS: 120, 121	0.20		1.6	1	100	20	EXIST.	EXIST.	EXIST.	EXIST.	0.20		1.6
29	29	LIGHTS: 117, 118	0.90	7.5		1	100	20	EXIST.	EXIST.	EXIST.	EXIST.	0.90	7.5	
31	31	REC: 102, 103, 104, 105, S01	1.20		10.0	1	100	20	EXIST.	EXIST.	EXIST.	EXIST.	0.60		5.0
33	33	REC: 105, 107	1.20	10.0		1	100	20	EXIST.	EXIST.	EXIST.	EXIST.	0.60	5.0	
35	35	REC: 101, 105, 107 & EXT @ FRONT	1.20		10.0	1	100	20	EXIST.	EXIST.	EXIST.	EXIST.	0.60		5.0
	37	SPARE				1	100	20							
	39	"				1	100	20							
41	41	?? TRACE IN FIELD				1	100	20	EXIST.	EXIST.	EXIST.	EXIST.			
2	2	WATER HEATER: RM.118	4.50	21.6		2	100	30	EXIST.	EXIST.	EXIST.	EXIST.	4.50	21.6	
	4				21.6				EXIST.						21.6
6	6	FURNACE F-4 (1/2 HP ASSUMED)	1.13	9.4		1	100	20	EXIST.	EXIST.	EXIST.	EXIST.	1.13	9.4	
8	8	REC: VENDING, 117	1.20		10.0	1	100	20	EXIST.	EXIST.	EXIST.	EXIST.	0.60		5.0
10	10	REC: VENDING, RM . 117, 118	1.20	10.0		1	100	20	EXIST.	EXIST.	EXIST.	EXIST.	0.60	5.0	
12	12	REC: 117 (MICROWAVE)	1.20		10.0	1	100	20	EXIST.	EXIST.	EXIST.	EXIST.	0.60		5.0
14	14	?? TRACE IN FIELD				1	100	20	EXIST.	EXIST.	EXIST.	EXIST.			
16	16	?? TRACE IN FIELD				1	100	20	EXIST.	EXIST.	EXIST.	EXIST.			
18	18	REC: 117	1.20	10.0		1	100	20	EXIST.	EXIST.	EXIST.	EXIST.	1.20	10.0	
20	20	?? TRACE IN FIELD				1	100	20	EXIST.	EXIST.	EXIST.	EXIST.			
22	22	LIGHTS: 101 (Keyswitch)	0.60	5.0		1	100	20	EXIST.	EXIST.	EXIST.	EXIST.	0.60	5.0	
24	24	NOTE 1	1.92		16.0	1	100	20	EXIST.	EXIST.	EXIST.	EXIST.	1.92		16.0
26	26	LIGHTS: 104, 107, 108, 109	1.92	16.0		1	100	20	EXIST.	EXIST.	EXIST.	EXIST.	1.92	16.0	
28	28	LIGHTS: 117, 119	0.80		6.7	1	100	20	EXIST.	EXIST.	EXIST.	EXIST.	0.80		6.7
30	30	EXIT LIGHTS: 103, 110, 117, 126				1	100	20	EXIST.	EXIST.	EXIST.	EXIST.			
32	32	REC: 107, 108, 109, 121	1.20		10.0	1	100	20	EXIST.	EXIST.	EXIST.	EXIST.	0.60		5.0
34	34	REC: 107	1.20	10.0		1	100	20	EXIST.	EXIST.	EXIST.	EXIST.	0.60	5.0	
36	36	REC: 107, 115, 116	1.20		10.0	1	100	20	EXIST.	EXIST.	EXIST.	EXIST.	0.60		5.0
38	38	WASHER & DRYER	4.99	24.0		2	100	30	EXIST.	EXIST.	EXIST.	EXIST.	4.99	24.0	
	40				24.0				EXIST.						24.0
42	42		0.00			1	100	20	EXIST.	EXIST.	EXIST.	EXIST.	0.00		
		TOTALS	51.40	232.3	218.7								43.60	207.3	178.7

NOTE 1: LIGHTS, 113, 114, 115, 116 / REC. 113, 114, 116

PANEL "A" SCHEDULE (Replacement)

EXISTING BREAKERS MAY BE REUSED

PANELBOARD CHARACTERISTICS:
VOLTS: 120/208
PHASES: 3
WIRES: 4
SOLID NEUTRAL, GROUND BAR

MAIN LUGS: 200 AMPS
MINIMUM SHORT CIRCUIT RATING: 10,000 RMS SYM AMPS
LOCATION: KITCHEN, 117

CKT. NO.	POLE NO.	DESCRIPTION	CONN. KVA	CONN. AMPS A	CONN. AMPS B	CONN. AMPS C	BREAKER P	BREAKER AF	BREAKER AT	NO. & WIRE SIZE PHASE	NO. & WIRE SIZE NEUT.	NO. & WIRE SIZE EGC	CONDUIT SIZE	DEMAND KVA	DEMAND AMPS A	DEMAND AMPS B	DEMAND AMPS C
1	1	RANGE: 117	8.32	40.0			2	100	50	EXIST.	EXIST.	EXIST.	EXIST.	8.32	40.0		
	3				40.0					EXIST.						40.0	
5	5	FURNACE F-5 (1/2 HP ASSUMED)	1.13			9.4	1	100	20	EXIST.	EXIST.	EXIST.	EXIST.	1.13			9.4
7	7	FURNACE F-1 (1/2 HP ASSUMED)	1.13	9.4			1	100	20	EXIST.	EXIST.	EXIST.	EXIST.	1.13	9.4		
9	9	REC: 110, 115, 116, 120, 121	1.20		10.0		1	100	20	EXIST.	EXIST.	EXIST.	EXIST.	0.60		5.0	
11	11	REC: 119 / LIGHTS, S02	1.20			10.0	1	100	20	EXIST.	EXIST.	EXIST.	EXIST.	0.30			2.5
13	13	DISHWASHER	1.13	9.4			1	100	20	EXIST.	EXIST.	EXIST.	EXIST.	1.13	9.4		
15	15	GARBAGE DISPOSAL & RANGE HOOD	1.13		9.4		1	100	20	EXIST.	EXIST.	EXIST.	EXIST.	1.13		9.4	
17	17	REC: 117	1.20			10.0	1	100	20	EXIST.	EXIST.	EXIST.	EXIST.	0.60			5.0
19	19	REC: 119 / MICROWAVE	1.20	10.0			1	100	20	EXIST.	EXIST.	EXIST.	EXIST.	0.60	5.0		
21	21	LIGHTS: 103, 110	1.68		14.0		1	100	20	EXIST.	EXIST.	EXIST.	EXIST.	1.68		14.0	
23	23	LIGHTS: 103, 110	1.20			10.0	1	100	20	EXIST.	EXIST.	EXIST.	EXIST.	1.20			10.0
25	25	LIGHTS: 107	1.80	15.0			1	100	20	EXIST.	EXIST.	EXIST.	EXIST.	1.80	15.0		
27	27	LIGHTS: 120, 121	1.15		9.6		1	100	20	#12	#12	#12	3/4"	1.15		9.6	
29	29	LIGHTS: 117, 118	1.20			10.0	1	100	20	EXIST.	EXIST.	EXIST.	EXIST.	1.20			10.0
31	31	REC: 102, 103, 104, 105, S01	1.20	10.0			1	100	20	EXIST.	EXIST.	EXIST.	EXIST.	0.60	5.0		
33	33	REC: 105, 107	1.20		10.0		1	100	20	EXIST.	EXIST.	EXIST.	EXIST.	0.60		5.0	
35	35	REC: 101, 105, 107 & EXT @ FRONT	1.20			10.0	1	100	20	EXIST.	EXIST.	EXIST.	EXIST.	0.60			5.0
37	37	REC: 120, 121	1.20	10.0			1	100	20	#12	#12	#12	3/4"	0.60	5.0		
39	39	REC: 107	1.20		10.0		1	100	20	#12	#12	#12	3/4"	0.60		5.0	
41	41	REC: 107	1.20			10.0	1	100	20	#12	#12			0.60			5.0
2	2	WATER HEATER: RM.118	4.50	21.6			2	100	30	EXIST.	EXIST.	EXIST.	EXIST.	4.50	21.6		
	4				21.6					EXIST.						21.6	
6	6	FURNACE F-4 (1/2 HP ASSUMED)	1.13			9.4	1	100	20	EXIST.	EXIST.	EXIST.	EXIST.	1.13			9.4
8	8	REC: 117	1.20	10.0			1	100	20	EXIST.	EXIST.	EXIST.	EXIST.	0.60	5.0		
10	10	REC: 117, 118	1.20		10.0		1	100	20	EXIST.	EXIST.	EXIST.	EXIST.	0.60		5.0	
12	12	REC: 117 (MICROWAVE)	1.20			10.0	1	100	20	EXIST.	EXIST.	EXIST.	EXIST.	0.60			5.0
14	14	REC: 107	1.20	10.0			1	100	20	#12	#12	#12	3/4"	0.60	5.0		
16	16	REC: 107	1.20		10.0		1	100	20	#12	#12			0.60		5.0	
18	18	REC: 117	1.20			10.0	1	100	20	EXIST.	EXIST.	EXIST.	EXIST.	0.60			5.0
20	20	?					1	100	20	EXIST.	EXIST.	EXIST.	EXIST.				
22	22	LIGHTS: 101 (Keyswitch)	0.60		5.0		1	100	20	EXIST.	EXIST.	EXIST.	EXIST.	0.60		5.0	
24	24	NOTE 1	1.92			16.0	1	100	20	EXIST.	EXIST.	EXIST.	EXIST.	1.92			16.0
26	26	LIGHTS: 104, 105, 108, 109	2.00	16.6			1	100	20	EXIST.	EXIST.	EXIST.	EXIST.	2.00	16.6		
28	28	LIGHTS: 119	0.40		3.3		1	100	20	EXIST.	EXIST.	EXIST.	EXIST.	0.40		3.3	
30	30	EXIT LIGHTS, 103, 110, 117, 126					1	100	20	EXIST.	EXIST.	EXIST.	EXIST.				
32	32	REC: 107, 108, 109, 121	1.20	10.0			1	100	20	EXIST.	EXIST.	EXIST.	EXIST.	0.60	5.0		
34	34	REC: 107	1.20		10.0		1	100	20	EXIST.	EXIST.	EXIST.	EXIST.	0.60		5.0	
36	36	REC: 107, 115, 116	1.20			10.0	1	100	20	EXIST.	EXIST.	EXIST.	EXIST.	0.60			5.0
38	38	WASHER & DRYER	4.99	24.0			2	100	30	EXIST.	EXIST.	EXIST.	EXIST.	4.99	24.0		
	40				24.0					EXIST.						24.0	
42	42		0.00				1	100	20	EXIST.	EXIST.	EXIST.	EXIST.	0.00			
		TOTALS	58.21	196.0	186.9	124.8								46.51	166.0	156.9	87.3

NOTE 1: LIGHTS, 113, 114, 115, 116 / REC. 113, 114, 116

REVISIONS:

This document originally issued and sealed by Walter G. Miles, P.E. No. 6740 on 02/21/07. This media should not be considered a certified document.

Master Engineers And Designers, Inc.
904 Lakeside Drive, Lynchburg, VA 24501
434-846-1350 Fax: 434-846-1351

INFORMATION TECHNOLOGY BUILDING
INFORMATION TECHNOLOGY DEPARTMENT
CITY OF LYNCHBURG, VIRGINIA

3550 YOUNG PLACE
LYNCHBURG, VIRGINIA

PANEL SCHEDULES
(Sheet 4 of 11)

DATE ISSUED:	02/15/07
SCALE:	NONE
JOB. NO.	262-187
DESIGNED:	WGM
DRAWN:	WGM
CHECKED:	WGM
APPROVED:	WGM

DRAWING NO.
E4.4
SHEET 20 OF 29
REVISION

PANEL "B" SCHEDULE (Existing Conditions)

PANELBOARD CHARACTERISTICS:
VOLTS: 120/208
PHASES: 1
WIRES: 3
SOLID NEUTRAL, GROUND BAR

MAIN LUGS: 200 AMPS
MINIMUM SHORT CIRCUIT RATING: 10,000 RMS SYM AMPS
LOCATION: OFFICE SUPPORT, 129

CKT. NO.	POLE NO.	DESCRIPTION	CONN. KVA	CONN. AMPS L1	CONN. AMPS L2	BREAKER P	BREAKER AF	BREAKER AT	NO. & WIRE SIZE PHASE	NO. & WIRE SIZE NEUT.	NO. & WIRE SIZE EGC	CONDUIT SIZE	DEMAND KVA	DEMAND AMPS L1	DEMAND AMPS L2
1	1	TIME ZONE CLOCKS, 132				1	100	20	EXIST.	EXIST.	EXIST.	EXIST.			
3	3	REC: 132 (Above)	1.20		10.0	1	100	20	EXIST.	EXIST.	EXIST.	EXIST.	0.60		5.0
5	5	LIGHTS ON BRIDGE, 132	1.80	15.0		1	100	20	EXIST.	EXIST.	EXIST.	EXIST.	1.80	15.0	
7	7	LIGHTS: 112, 124, 125	0.60		5.0	1	100	20	EXIST.	EXIST.	EXIST.	EXIST.	0.60		5.0
9	9	LIGHTS: 132	1.20	10.0		1	100	20	EXIST.	EXIST.	EXIST.	EXIST.	1.20	10.0	
11	11	REC: 132 (FLOOR)	1.20		10.0	1	100	20	EXIST.	EXIST.	EXIST.	EXIST.	0.60		5.0
13	13	REC: 132 (FLOOR)	1.20	10.0		1	100	20	EXIST.	EXIST.	EXIST.	EXIST.	0.60	6.0	
15	15	REC: 132 (COLUMN)	1.20		10.0	1	100	20	EXIST.	EXIST.	EXIST.	EXIST.	0.60		6.0
17	17	REC: 132 (FLOOR)	1.20	10.0		1	100	20	EXIST.	EXIST.	EXIST.	EXIST.	0.60	6.0	
19	19	REC: 103	1.20		10.0	1	100	20	EXIST.	EXIST.	EXIST.	EXIST.	0.60		6.0
21	21	REC: 132	1.20	10.0		1	100	20	EXIST.	EXIST.	EXIST.	EXIST.	0.60	6.0	
23	23	REC: 132 (FLOOR)	1.20		10.0	1	100	20	EXIST.	EXIST.	EXIST.	EXIST.	0.60		6.0
25	25	REC: 101, 132 / DECORATIVE LIGHTS, 132	1.20	10.0		1	100	20	EXIST.	EXIST.	EXIST.	EXIST.	0.60	6.0	
27	27	REC: 103, 110, 111, 132	1.20		10.0	1	100	20	EXIST.	EXIST.	EXIST.	EXIST.	0.60		6.0
29	29	REC: 112, 125	1.20	10.0		1	100	20	EXIST.	EXIST.	EXIST.	EXIST.	0.60	6.0	
31	31	REC: 117, 124	1.20		10.0	1	100	20	EXIST.	EXIST.	EXIST.	EXIST.	0.60		6.0
33	33	REC: 129	1.20	10.0		1	100	20	EXIST.	EXIST.	EXIST.	EXIST.	0.60	6.0	
35	35	REC: 131, 132 & LIGHTS, 131	1.20		10.0	1	100	20	EXIST.	EXIST.	EXIST.	EXIST.	0.60		6.0
37	37	CONTACTOR FOR M.H. LIGHTS, 129	0.20	1.6		1	100	20	EXIST.	EXIST.	EXIST.	EXIST.	0.20	1.6	
39	39	LIGHTS: 132 (HID)	1.44		12.0	1	100	20	EXIST.	EXIST.	EXIST.	EXIST.	1.44		12.0
41	41	LIGHTS: 132 (HID)	1.44	12.0		1	100	20	EXIST.	EXIST.	EXIST.	EXIST.	1.44	12.0	
2	2	STAGE WORK LIGHTS (?)	1.80	15.0		1	100	20	EXIST.	EXIST.	EXIST.	EXIST.	1.80	15.0	
4	4	LIGHTS: 132	1.20		10.0	1	100	20	EXIST.	EXIST.	EXIST.	EXIST.	1.20		10.0
6	6	LIGHTS: 132	1.20	10.0		1	100	20	EXIST.	EXIST.	EXIST.	EXIST.	1.20	10.0	
8	8	LIGHTS: 111	0.40		3.3	1	100	20	EXIST.	EXIST.	EXIST.	EXIST.	0.40		3.3
10	10	LIGHTS: 132	1.20	10.0		1	100	20	EXIST.	EXIST.	EXIST.	EXIST.	1.20	10.0	
12	12	REC: 132 (FLOOR)	1.20		10.0	1	100	20	EXIST.	EXIST.	EXIST.	EXIST.	0.60		5.0
14	14	REC: 132 (COLUMN)	1.20	10.0		1	100	20	EXIST.	EXIST.	EXIST.	EXIST.	0.60	5.0	
16	16	REC: 132, 131	1.20		10.0	1	100	20	EXIST.	EXIST.	EXIST.	EXIST.	0.60		5.0
18	18	REC: 132 (FLOOR)	1.20	10.0		1	100	20	EXIST.	EXIST.	EXIST.	EXIST.	0.60	5.0	
20	20	REC: 132	1.20		10.0	1	100	20	EXIST.	EXIST.	EXIST.	EXIST.	0.60		5.0
22	22	REC: 132 (FLOOR)	1.20	10.0		1	100	20	EXIST.	EXIST.	EXIST.	EXIST.	0.60	5.0	
24	24	REC: 132 (FLOOR)	1.20		10.0	1	100	20	EXIST.	EXIST.	EXIST.	EXIST.	0.60		5.0
26	26	REC: RM 132, DECORATIVE LIGHTS, 132	1.20	10.0		1	100	20	EXIST.	EXIST.	EXIST.	EXIST.	0.60	5.0	
28	28	REC: 110, 112,113, 114, 132	1.20		10.0	1	100	20	EXIST.	EXIST.	EXIST.	EXIST.	0.60		5.0
30	30	REC: 124, 125	1.20	10.0		1	100	20	EXIST.	EXIST.	EXIST.	EXIST.	0.60	5.0	
32	32	REC: 129	1.20		10.0	1	100	20	EXIST.	EXIST.	EXIST.	EXIST.	0.60		5.0
34	34	REC. & LIGHTS (R&B) ON BRIDGE, 132	1.20	10.0		1	100	20	EXIST.	EXIST.	EXIST.	EXIST.	0.60	5.0	
36	36	REC: ON BRIDGE, 132	1.20		10.0	1	100	20	EXIST.	EXIST.	EXIST.	EXIST.	0.60		5.0
38	38	REC: 132 (COLUMN)	1.20	10.0		1	100	20	EXIST.	EXIST.	EXIST.	EXIST.	0.60	5.0	
40	40	?? TRACE IN FIELD			0	1	100	20	EXIST.	EXIST.	EXIST.	EXIST.			0
	42	?? TRACE IN FIELD	0.00			1	100	20	EXIST.	EXIST.	EXIST.	EXIST.	0.00		
		TOTALS	46.08	203.6	180.3								29.28	144.6	111.3

PANEL "B" SCHEDULE (Reworked Conditions)

PANELBOARD CHARACTERISTICS:
VOLTS: 120/208
PHASES: 1
WIRES: 3
SOLID NEUTRAL, GROUND BAR

MAIN LUGS: 200 AMPS
MINIMUM SHORT CIRCUIT RATING: 10,000 RMS SYM AMPS
LOCATION: OFFICE SUPPORT, 129

CKT. NO.	POLE NO.	DESCRIPTION	CONN. KVA	CONN. AMPS L1	CONN. AMPS L2	BREAKER P	BREAKER AF	BREAKER AT	NO. & WIRE SIZE PHASE	NO. & WIRE SIZE NEUT.	NO. & WIRE SIZE EGC	CONDUIT SIZE	DEMAND KVA	DEMAND AMPS L1	DEMAND AMPS L2
1	1	TIME ZONE CLOCKS, 132				1	100	20	EXIST.	EXIST.	EXIST.	EXIST.			
3	3	REC: 132 (Above)	1.20		10.0	1	100	20	EXIST.	EXIST.	EXIST.	EXIST.	0.60		5.0
5	5	LIGHTS: 240	0.40	3.3		1	100	20	#12	#12	#12	3/4"	0.40	3.3	
7	7	LIGHTS: 112, 124, 125	0.80		6.7	1	100	20	EXIST.	EXIST.	EXIST.	EXIST.	0.80		6.7
9	9	LIGHTS. 132	1.20	10.0		1	100	20	EXIST.	EXIST.	EXIST.	EXIST.	1.20	10.0	
11	11	AIR HANDLING UNIT "AHU-7" (1 HP ASSUMED)	1.84		8.8	2	100	20	#12	---	#12	3/4"	1.84		8.8
	13			8.8					#12					8.8	
15	15	REC: 132 (COLUMN)	1.20		10.0	1	100	20	EXIST.	EXIST.	EXIST.	EXIST.	0.60		6.0
17	17	SPARE				1	100	20							
19	19	REC: 103	1.20		10.0	1	100	20	EXIST.	EXIST.	EXIST.	EXIST.	0.60		6.0
21	21	REC: 132	1.20	10.0		1	100	20	EXIST.	EXIST.	EXIST.	EXIST.	0.60	6.0	
23	23	SPARE				1	100	20							
25	25	REC: 101, 132, DECORATIVE LIGHTS. RM 132	1.20	10.0		1	100	20	EXIST.	EXIST.	EXIST.	EXIST.	0.60	6.0	
27	27	REC: 103, 110, 111, 132	1.20		10.0	1	100	20	EXIST.	EXIST.	EXIST.	EXIST.	0.60		6.0
29	29	REC: 112, 125	1.20	10.0		1	100	20	EXIST.	EXIST.	EXIST.	EXIST.	0.60	6.0	
31	31	REC: 117, 124	1.20		10.0	1	100	20	EXIST.	EXIST.	EXIST.	EXIST.	0.60		6.0
33	33	REC: 129	1.20	10.0		1	100	20	EXIST.	EXIST.	EXIST.	EXIST.	0.60	6.0	
35	35	REC: 131, 132 & LIGHTS, 131	1.20		10.0	1	100	20	EXIST.	EXIST.	EXIST.	EXIST.	0.60		6.0
37	37	CONTACTOR FOR M.H. LIGHTS, 129	0.20	1.6		1	100	20	EXIST.	EXIST.	EXIST.	EXIST.	0.20	1.6	
39	39	LIGHTS: 132 (HID) Right Dome Lights	1.44		12.0	1	100	20	EXIST.	EXIST.	EXIST.	EXIST.	1.44		12.0
41	41	LIGHTS: 132 (HID) Left Dome Lights	1.44	12.0		1	100	20	EXIST.	EXIST.	EXIST.	EXIST.	1.44	12.0	
2	2	STAGE WORK LIGHTS (?)	1.80	15.0		1	100	20	EXIST.	EXIST.	EXIST.	EXIST.	1.80	15.0	
4	4	LIGHTS: 132	1.20		10.0	1	100	20	EXIST.	EXIST.	EXIST.	EXIST.	1.20		10.0
6	6	LIGHTS: 132	1.20	10.0		1	100	20	EXIST.	EXIST.	EXIST.	EXIST.	1.20	10.0	
8	8	LIGHTS: 111	0.40		3.3	1	100	20	EXIST.	EXIST.	EXIST.	EXIST.	0.40		3.3
10	10	LIGHTS: 132	1.20	10.0		1	100	20	EXIST.	EXIST.	EXIST.	EXIST.	1.20	10.0	
12	12	SPARE				1	100	20							
14	14	REC: 132 (COLUMN)	1.20	10.0		1	100	20	EXIST.	EXIST.	EXIST.	EXIST.	0.60	5.0	
16	16	REC: 132, 131	1.20		10.0	1	100	20	EXIST.	EXIST.	EXIST.	EXIST.	0.60		5.0
18	18	SPARE				1	100	20							
20	20	REC: 132 (COLUMN) Overhead Projector	1.20		10.0	1	100	20	EXIST.	EXIST.	EXIST.	EXIST.	0.60		5.0
22	22	AIR HANDLING UNIT "AHU-8" (1 HP ASSUMED)	1.84	8.8		2	100	20	#12	---	#12	3/4"	1.84	8.8	
	24				8.8				#12						8.8
26	26	REC: RM 132, DECORATIVE LIGHTS, 132	1.20	10.0		1	100	20	EXIST.	EXIST.	EXIST.	EXIST.	0.60	5.0	
28	28	REC: 110, 112,113, 114, 132	1.20		10.0	1	100	20	EXIST.	EXIST.	EXIST.	EXIST.	0.60		5.0
30	30	REC: 124, 125	1.20	10.0		1	100	20	EXIST.	EXIST.	EXIST.	EXIST.	0.60	5.0	
32	32	REC: 129	1.20		10.0	1	100	20	EXIST.	EXIST.	EXIST.	EXIST.	0.60		5.0
34	34	SPARE				1	100	20							
36	36	SPARE				1	100	20							
38	38	REC: 132 (COLUMN)	1.20	10.0		1	100	20	EXIST.	EXIST.	EXIST.	EXIST.	0.60	5.0	
40	40	?			0	1	100	20	EXIST.	EXIST.	EXIST.	EXIST.			0
42	42	?				1	100	20	EXIST.	EXIST.	EXIST.	EXIST.	0.00		
		TOTALS	36.56	159.5	149.6								25.76	123.5	104.6

REVISIONS:

This document originally issued and sealed by Walter G. Miles, P.E. No. 6740 on 02/21/07. This media should not be considered a certified document.

Master Engineers And Designers, Inc.
904 Lakeside Drive, Lynchburg, VA 24501
434-846-1350 Fax: 434-846-1351

INFORMATION TECHNOLOGY BUILDING
INFORMATION TECHNOLOGY DEPARTMENT
CITY OF LYNCHBURG, VIRGINIA
3550 YOUNG PLACE
LYNCHBURG, VIRGINIA

PANEL SCHEDULES
(Sheet 4 of 11)

DATE ISSUED: 02/15/07
SCALE: NONE
JOB. NO. 262-187
DESIGNED: WGM
DRAWN: WGM
CHECKED: WGM
APPROVED: WGM

DRAWING NO.
E4.5
SHEET 21 OF 29
REVISION

PANEL "C" SCHEDULE (Existing Conditions)

PANELBOARD CHARACTERISTICS:
VOLTS: 120/208
PHASES: 1
WIRES: 3
SOLID NEUTRAL, GROUND BAR

MAIN LUGS: 200 AMPS
MINIMUM SHORT CIRCUIT RATING: 10,000 RMS SYM AMPS
LOCATION: OFFICE SUPPORT, 129

CKT. NO.	POLE NO.	DESCRIPTION	CONN. KVA	CONN. AMPS L1	CONN. AMPS L2	BREAKER P	BREAKER AF	BREAKER AT	NO. & WIRE SIZE PHASE	NO. & WIRE SIZE NEUT.	NO. & WIRE SIZE EGC	CONDUIT SIZE	DEMAND KVA	DEMAND AMPS L1	DEMAND AMPS L2
1	1	WATER HEATER: 131	7.10	34.1		2	100	30	EXIST.	EXIST.	EXIST.	EXIST.	7.10	34.1	
	3				34.1				EXIST.						34.1
5	5	LIFT (SPARE ??) TRACE IN FIELD				2	100	30	EXIST.	EXIST.	EXIST.	EXIST.			
	7								EXIST.						
	9	SPACE & BUS ONLY				1	100								
	11	"				"	"								
	13	"				"	"								
	15	"				"	"								
17	17	REC. & LIGHTS: 131 (Under rocks)	1.20	10.0		1	100	20	EXIST.	EXIST.	EXIST.	EXIST.	1.20	10.0	
19	19	SPARE				1	100	20	EXIST.	EXIST.	EXIST.	EXIST.			
21	21	REC: 123	1.20	10.0		1	100	20	EXIST.	EXIST.	EXIST.	EXIST.	0.60	5.0	
23	23	REC: 128	1.20		10.0	1	100	20	EXIST.	EXIST.	EXIST.	EXIST.	0.60		5.0
25	25	REC: 128	1.20	10.0		1	100	20	EXIST.	EXIST.	EXIST.	EXIST.	0.60	5.0	
27	27	REC: 131	1.20		10.0	1	100	20	EXIST.	EXIST.	EXIST.	EXIST.	0.60		5.0
29	29	REC: 131	1.20	10.0		1	100	20	EXIST.	EXIST.	EXIST.	EXIST.	0.60	5.0	
31	31	LIGHTS: 123	0.80		6.7	1	100	20	EXIST.	EXIST.	EXIST.	EXIST.	0.80		6.7
33	33	LIGHTS: 128	0.80	6.7		1	100	20	EXIST.	EXIST.	EXIST.	EXIST.	0.80	6.7	
35	35	REC: 131	1.20		10.0	1	100	20	EXIST.	EXIST.	EXIST.	EXIST.	0.60		5.0
37	37	?? TRACE IN FIELD				1	100	20	EXIST.	EXIST.	EXIST.	EXIST.			
39	39	REC. / CENT. VAC. 131	1.20		10.0	1	100	20	EXIST.	EXIST.	EXIST.	EXIST.	0.60		5.0
41	41	?? TRACE IN FIELD				1	100	20	EXIST.	EXIST.	EXIST.	EXIST.			
2	2	GENERATOR CHARGER	1.20	10.0		1	100	20	EXIST.	EXIST.	EXIST.	EXIST.	1.20	10.0	
4	4	GENERATOR CHARGER	1.20		10.0	1	100	20	EXIST.	EXIST.	EXIST.	EXIST.	1.20		10.0
	6	SPACE & BUS ONLY				1	100								
	8	"				"	"								
10	10	NOTE 1	1.13	9.4		1	100	20	EXIST.	EXIST.	EXIST.	EXIST.			
12	12	FURNACE "F-9" (1/2 HP ASSUMED)	1.13		9.4	1	100	20	EXIST.	EXIST.	EXIST.	EXIST.	1.13		9.4
14	14	FURNACE "F-12" (1/2 HP ASSUMED)	1.13	9.4		1	100	20	EXIST.	EXIST.	EXIST.	EXIST.	1.13	9.4	
16	16	FURNACE "F-10" (1/2 HP ASSUMED)	1.13		9.4	1	100	20	EXIST.	EXIST.	EXIST.	EXIST.	1.13		9.4
18	18	?? TRACE IN FIELD				1	100	20	EXIST.	EXIST.	EXIST.	EXIST.			
20	20	REC: 117, 123, REAR TERRACE	1.20		10.0	1	100	20	EXIST.	EXIST.	EXIST.	EXIST.	0.60		5.0
22	22	REC: 123, 126	1.20	10.0		1	100	20	EXIST.	EXIST.	EXIST.	EXIST.	0.60	5.0	
24	24	REC: 128	1.20		10.0	1	100	20	EXIST.	EXIST.	EXIST.	EXIST.	0.60		5.0
26	26	REC: 128	1.20	10.0		1	100	20	EXIST.	EXIST.	EXIST.	EXIST.	0.60	5.0	
28	28	?? TRACE IN FIELD				1	100	20	EXIST.	EXIST.	EXIST.	EXIST.			
30	30	REC: 131	1.20	10.0		1	100	20	EXIST.	EXIST.	EXIST.	EXIST.	0.60	5.0	
32	32	LIGHTS: 123, 126	1.00		8.3	1	100	20	EXIST.	EXIST.	EXIST.	EXIST.	1.00		8.3
34	34	LIGHTS: 131	0.76	6.4		1	100	20	EXIST.	EXIST.	EXIST.	EXIST.	0.76	6.4	
36	36	LIGHTS: 131	1.30		11.2	1	100	20	EXIST.	EXIST.	EXIST.	EXIST.	1.30		11.2
38	38	?? TRACE IN FIELD				1	100	20	EXIST.	EXIST.	EXIST.	EXIST.			
40	40	REC. / CENT. VAC. # 2: 131	1.20		10.0	1	100	20	EXIST.	EXIST.	EXIST.	EXIST.	0.60		5.0
42	42	?? TRACE IN FIELD				1	100	20	EXIST.	EXIST.	EXIST.	EXIST.			
		TOTALS	35.48	146.0	159.1								26.55	106.6	124.1

NOTE 1: FURNACE "F-11" (1/2 HP ASSUMED) & EXHAUST HOOD

PANEL "C" SCHEDULE (Reworked Conditions)

PANELBOARD CHARACTERISTICS:
VOLTS: 120/208
PHASES: 1
WIRES: 3
SOLID NEUTRAL, GROUND BAR

MAIN LUGS: 200 AMPS
MINIMUM SHORT CIRCUIT RATING: 10,000 RMS SYM AMPS
LOCATION: OFFICE SUPPORT, 129

CKT. NO.	POLE NO.	DESCRIPTION	CONN. KVA	CONN. AMPS L1	CONN. AMPS L2	BREAKER P	BREAKER AF	BREAKER AT	NO. & WIRE SIZE PHASE	NO. & WIRE SIZE NEUT.	NO. & WIRE SIZE EGC	CONDUIT SIZE	DEMAND KVA	DEMAND AMPS L1	DEMAND AMPS L2
1	1	WATER HEATER: 131	7.10	34.1		2	100	30	EXIST.	EXIST.	EXIST.	EXIST.	7.10	34.1	
	3				34.1				EXIST.						34.1
5	5	LIFT (SPARE ??)				2	100	30	EXIST.	EXIST.	EXIST.	EXIST.			
	7								EXIST.						
	9	SPACE & BUS ONLY				1	100								
	11	"				"	"								
	13	"				"	"								
	15	"				"	"								
17	17	REC. & LIGHTS, 131 (Under rocks)	1.20	10.0		1	100	20	EXIST.	EXIST.	EXIST.	EXIST.	1.20	10.0	
19	19	SPARE				1	100	20	EXIST.	EXIST.	EXIST.	EXIST.			
21	21	SPARE				1	100	20							
23	23	REC: 128	1.20		10.0	1	100	20	EXIST.	EXIST.	EXIST.	EXIST.	0.60		5.0
25	25	REC: 128	1.20	10.0		1	100	20	EXIST.	EXIST.	EXIST.	EXIST.	0.60	5.0	
27	27	REC: 131, overhead doors	1.20		10.0	1	100	20	EXIST.	EXIST.	EXIST.	EXIST.	0.60		5.0
29	29	REC: 131	1.20	10.0		1	100	20	EXIST.	EXIST.	EXIST.	EXIST.	0.60	5.0	
31	31	SPARE				1	100	20							
33	33	LIGHTS: 128	0.80	6.7		1	100	20	EXIST.	EXIST.	EXIST.	EXIST.	0.80	6.7	
35	35	REC: 131	1.20		10.0	1	100	20	EXIST.	EXIST.	EXIST.	EXIST.	0.60		5.0
37	37	?				1	100	20	EXIST.	EXIST.	EXIST.	EXIST.			
39	39	REC. / CENT. VAC.: 131	1.20		10.0	1	100	20	EXIST.	EXIST.	EXIST.	EXIST.	0.60		5.0
41	41	?				1	100	20	EXIST.	EXIST.	EXIST.	EXIST.			
2	2	GENERATOR CHARGER	1.20	10.0		1	100	20	EXIST.	EXIST.	EXIST.	EXIST.	1.20	10.0	
4	4	GENERATOR CHARGER	1.20		10.0	1	100	20	EXIST.	EXIST.	EXIST.	EXIST.	1.20		10.0
	6	SPACE & BUS ONLY				1	100								
	8	"				"	"								
10	10	SPARE				1	100	20							
12	12	FURNACE "F-9" (1/2 HP ASSUMED)	1.13		9.4	1	100	20	EXIST.	EXIST.	EXIST.	EXIST.	1.13		9.4
14	14	FURNACE "F-12" (1/2 HP ASSUMED)	1.13	9.4		1	100	20	EXIST.	EXIST.	EXIST.	EXIST.	1.13	9.4	
16	16	FURNACE "F-10" (1/2 HP ASSUMED)	1.13		9.4	1	100	20	EXIST.	EXIST.	EXIST.	EXIST.	1.13		9.4
18	18	?				1	100	20	EXIST.	EXIST.	EXIST.	EXIST.			
20	20	REC: 117, 123, REAR TERRACE	1.20		10.0	1	100	20	EXIST.	EXIST.	EXIST.	EXIST.	0.60		5.0
22	22	REC: 123, 126	1.20	10.0		1	100	20	EXIST.	EXIST.	EXIST.	EXIST.	0.60	5.0	
24	24	REC: 128	1.20		10.0	1	100	20	EXIST.	EXIST.	EXIST.	EXIST.	0.60		5.0
26	26	REC: 128	1.20	10.0		1	100	20	EXIST.	EXIST.	EXIST.	EXIST.	0.60	5.0	
28	28	?				1	100	20	EXIST.	EXIST.	EXIST.	EXIST.			
30	30	REC: 131	1.20	10.0		1	100	20	EXIST.	EXIST.	EXIST.	EXIST.	0.60	5.0	
32	32	SPARE				1	100	20							
34	34	LIGHTS: 131	0.76	6.4		1	100	20	EXIST.	EXIST.	EXIST.	EXIST.	0.76	6.4	
36	36	LIGHTS: 131	1.30		11.2	1	100	20	EXIST.	EXIST.	EXIST.	EXIST.	1.30		11.2
38	38	?				1	100	20	EXIST.	EXIST.	EXIST.	EXIST.			
40	40	REC. / CENT. VAC. # 2: 131	1.20		10.0	1	100	20	EXIST.	EXIST.	EXIST.	EXIST.	0.60		5.0
42	42	?				1	100	20	EXIST.	EXIST.	EXIST.	EXIST.			
		TOTALS	31.35	126.6	144.1								24.15	101.6	109.1

NOTE 1: FURNACE "F-11" (1/2 HP ASSUMED) & EXHAUST HOOD

REVISIONS:

This document originally issued and sealed by Walter G. Miles, P.E. No. 6740 on 02/21/07. This media should not be considered a certified document.

Master Engineers And Designers, Inc.
904 Lakeside Drive, Lynchburg, VA 24501
434-846-1350 Fax: 434-846-1351

INFORMATION TECHNOLOGY BUILDING
INFORMATION TECHNOLOGY DEPARTMENT
CITY OF LYNCHBURG, VIRGINIA
3550 YOUNG PLACE
LYNCHBURG, VIRGINIA

PANEL SCHEDULES
(Sheet 6 of 11)

DATE ISSUED: 02/15/07
SCALE: NONE
JOB. NO. 262-187
DESIGNED: WGM
DRAWN: WGM
CHECKED: WGM
APPROVED: WGM

DRAWING NO.
E4.6
SHEET 22 OF 29
REVISION

PANEL "D" SCHEDULE (Existing Conditions)

PANELBOARD CHARACTERISTICS:
VOLTS: 120/208
PHASES: 1
WIRES: 3
SOLID NEUTRAL, GROUND BAR

MAIN LUGS: 200 AMPS

MINIMUM SHORT CIRCUIT RATING: 10,000 RMS SYM AMPS

LOCATION: CORRIDOR,202

CKT. NO.	POLE NO.	DESCRIPTION	CONN. KVA	CONN. AMPS L1	CONN. AMPS L2	BREAKER P	BREAKER AF	BREAKER AT	NO. & WIRE SIZE PHASE	NO. & WIRE SIZE NEUT.	NO. & WIRE SIZE EGC	CONDUIT SIZE	DEMAND KVA	DEMAND AMPS L1	DEMAND AMPS L2
1	1	WATER HEATER: 231	4.50	21.6		2	100	30	EXIST.	EXIST.	EXIST.	EXIST.	4.50	21.6	
	3				21.6				EXIST.						21.6
5	5	WATER HEATER: 234	4.50	21.6		2	100	30	EXIST.	EXIST.	EXIST.	EXIST.	4.50	21.6	
	7				21.6				EXIST.						21.6
9	9	REC: 217, 202	1.20	10.0		1	100	20	EXIST.	EXIST.	EXIST.	EXIST.	0.60	5.0	
11	11	REC: 216, 217	1.20		10.0	1	100	20	EXIST.	EXIST.	EXIST.	EXIST.	0.60		5.0
13	13	REC: 216, 218	1.20	10.0		1	100	20	EXIST.	EXIST.	EXIST.	EXIST.	0.60	5.0	
15	15	REC: 202, 215	1.20		10.0	1	100	20	EXIST.	EXIST.	EXIST.	EXIST.	0.60		5.0
17	17	REC: 202, 214, 215	1.20	10.0		1	100	20	EXIST.	EXIST.	EXIST.	EXIST.	0.60	5.0	
19	19	REC: 213	1.20		10.0	1	100	20	EXIST.	EXIST.	EXIST.	EXIST.	0.60		5.0
21	21	LIGHTS: 213, 214, 215, 216, 217	1.80	15.0		1	100	20	EXIST.	EXIST.	EXIST.	EXIST.	1.80	15.0	
23	23	LIGHTS & REC: 219, 220, 221, 222	1.80		15.0	1	100	20	EXIST.	EXIST.	EXIST.	EXIST.	1.80		15.0
25	25	LIGHTS: 223, 230, 232, 233	1.80	15.0		1	100	20	EXIST.	EXIST.	EXIST.	EXIST.	1.80	15.0	
27	27	REC: 224	1.20		10.0	1	100	20	EXIST.	EXIST.	EXIST.	EXIST.	0.60		5.0
29	29	REC: 221, 222, 226	1.20	10.0		1	100	20	EXIST.	EXIST.	EXIST.	EXIST.	0.60	5.0	
31	31	REC: 226	1.20		10.0	1	100	20	EXIST.	EXIST.	EXIST.	EXIST.	0.60		5.0
33	33	REC: 226,227	1.20	10.0		1	100	20	EXIST.	EXIST.	EXIST.	EXIST.	0.60	5.0	
35	35	REC: 230, 232	1.20		10.0	1	100	20	EXIST.	EXIST.	EXIST.	EXIST.	0.60		5.0
37	37	REC: 230, 232	1.20	10.0		1	100	20	EXIST.	EXIST.	EXIST.	EXIST.	0.60	5.0	
39	39	REC: 202, 223, 233	1.20		10.0	1	100	20	EXIST.	EXIST.	EXIST.	EXIST.	0.60		5.0
41	41	?? TRACE IN FIELD				1	100	20	EXIST.	EXIST.	EXIST.	EXIST.			
2	2	RANGE HOOD	1.20	10.0		1	100	20	EXIST.	EXIST.	EXIST.	EXIST.	1.20	10.0	
4	4	HOT PLATE	1.68		14.0	1	100	20	EXIST.	EXIST.	EXIST.	EXIST.	1.68		14.0
6	6	FURNACE "F-2" (1/2 HP ASSUMED)	1.13	9.4		1	100	20	EXIST.	EXIST.	EXIST.	EXIST.	1.13	9.4	
8	8	FURNACE "F-3" (1/2 HP ASSUMED)	1.13		9.4	1	100	20	EXIST.	EXIST.	EXIST.	EXIST.	1.13		9.4
10	10	REC: 218	1.20	10.0		1	100	20	EXIST.	EXIST.	EXIST.	EXIST.	0.60	5.0	
12	12	REC: 221	1.20		10.0	1	100	20	EXIST.	EXIST.	EXIST.	EXIST.	0.60		5.0
14	14	REC: 223	1.20	10.0		1	100	20	EXIST.	EXIST.	EXIST.	EXIST.	0.60	5.0	
16	16	REC: 219, 220	1.20		10.0	1	100	20	EXIST.	EXIST.	EXIST.	EXIST.	0.60		5.0
18	18	REC: 206, 207	1.20	10.0		1	100	20	EXIST.	EXIST.	EXIST.	EXIST.	0.60	5.0	
20	20	REC: 202, 210	1.20		10.0	1	100	20	EXIST.	EXIST.	EXIST.	EXIST.	0.60		5.0
22	22	NOTE 1	2.00	17.2		1	100	20	EXIST.	EXIST.	EXIST.	EXIST.	2.00	17.2	
24	24	LIGHTS: RM 226A, 227, 233	0.58		4.8	1	100	20	EXIST.	EXIST.	EXIST.	EXIST.	0.58		4.8
26	26	NOTE 2	1.80	15.0		1	100	20	EXIST.	EXIST.	EXIST.	EXIST.	1.80	15.0	
28	28	REC: 201, 206, 207, 224, 240	1.20		10.0	1	100	20	EXIST.	EXIST.	EXIST.	EXIST.	0.60		5.0
30	30	REC: 202, 209, 220	1.20	10.0		1	100	20	EXIST.	EXIST.	EXIST.	EXIST.	0.60	5.0	
32	32	REC: 203, 204, 205, 211, 212	1.20		10.0	1	100	20	EXIST.	EXIST.	EXIST.	EXIST.	0.60		5.0
34	34	REC: 202, 217, 218, 219, 220	1.20	10.0		1	100	20	EXIST.	EXIST.	EXIST.	EXIST.	0.60	5.0	
36	36	REC: 201, 203 & LIGHTS, 203	1.68		14.0	1	100	20	EXIST.	EXIST.	EXIST.	EXIST.	1.68		14.0
38	38	LIGHTS: 201, 202	1.92	16.0		1	100	20	EXIST.	EXIST.	EXIST.	EXIST.	1.92	16.0	
40	40	?? TRACE IN FIELD			0	1	100	20	EXIST.	EXIST.	EXIST.	EXIST.			0
42	42	?? TRACE IN FIELD	0.00			1	100	20	EXIST.	EXIST.	EXIST.	EXIST.	0.00		
		TOTALS	55.12	250.8	220.4								41.32	195.8	160.4

NOTE 1: REC., LIGHTS & W. C: 202, 206, 207, 209, 224
NOTE 2: REC: 203 / LIGHTS: 205, 210, 211, 212, S01

PANEL "D" SCHEDULE (Replacement)

EXISTING BREAKERS MAY BE REUSED

PANELBOARD CHARACTERISTICS:
VOLTS: 120/208
PHASES: 3
WIRES: 4
SOLID NEUTRAL, GROUND BAR

MAIN LUGS: 225 AMPS

MINIMUM SHORT CIRCUIT RATING: 10,000 RMS SYM AMPS

LOCATION: CORRIDOR, 202

CKT. NO.	POLE NO.	DESCRIPTION	CONN. KVA	CONN. AMPS A	CONN. AMPS B	CONN. AMPS C	BREAKER P	BREAKER AF	BREAKER AT	NO. & WIRE SIZE PHASE	NO. & WIRE SIZE NEUT.	NO. & WIRE SIZE EGC	CONDUIT SIZE	DEMAND KVA	DEMAND AMPS A	DEMAND AMPS B	DEMAND AMPS C
1	1	WATER HEATER: 231	4.50	21.6			2	100	30	EXIST.	EXIST.	EXIST.	EXIST.	4.50	21.6		
	3				21.6					EXIST.						21.6	
5	5	WATER HEATER: 234	4.50			21.6	2	100	30	EXIST.	EXIST.	EXIST.	EXIST.	4.50			21.6
	7			21.6						EXIST.					21.6		
9	9	REC: 217, 202	1.20		10.0		1	100	20	EXIST.	EXIST.	EXIST.	EXIST.	0.60		5.0	
11	11	REC: 216, 217	1.20			10.0	1	100	20	EXIST.	EXIST.	EXIST.	EXIST.	0.60			5.0
13	13	REC: 216, 218	1.20	10.0			1	100	20	EXIST.	EXIST.	EXIST.	EXIST.	0.60	5.0		
15	15	REC: 202, 215	1.20		10.0		1	100	20	EXIST.	EXIST.	EXIST.	EXIST.	0.60		5.0	
17	17	REC: 202, 214, 215	1.20			10.0	1	100	20	EXIST.	EXIST.	EXIST.	EXIST.	0.60			5.0
19	19	REC: 213	1.20	10.0			1	100	20	EXIST.	EXIST.	EXIST.	EXIST.	0.60	5.0		
21	21	LIGHTS: 213, 214, 215, 216, 217	1.80		15.0		1	100	20	EXIST.	EXIST.	EXIST.	EXIST.	1.80		15.0	
23	23	LIGHTS: 219, 220, 221A&B, 222	1.64			13.5	1	100	20	EXIST.	EXIST.	EXIST.	EXIST.	1.64			13.5
25	25	LIGHTS: 223	1.20	10.0			1	100	20	EXIST.	EXIST.	EXIST.	EXIST.	1.20	10.0		
27	27	REC: 224	1.20		10.0		1	100	20	EXIST.	EXIST.	EXIST.	EXIST.	0.60		5.0	
29	29	REC: 221, 222, 226	1.20			10.0	1	100	20	EXIST.	EXIST.	EXIST.	EXIST.	0.60			5.0
31	31	REC: 226	1.20	10.0			1	100	20	EXIST.	EXIST.	EXIST.	EXIST.	0.60	5.0		
33	33	REC: 226,227	1.20		10.0		1	100	20	EXIST.	EXIST.	EXIST.	EXIST.	0.60		5.0	
35	35	REC: 232	1.20			10.0	1	100	20	EXIST.	EXIST.	EXIST.	EXIST.	0.60			5.0
37	37	REC: 232	1.20	10.0			1	100	20	EXIST.	EXIST.	EXIST.	EXIST.	0.60	5.0		
39	39	REC: 202, 223, 233	1.20		10.0		1	100	20	EXIST.	EXIST.	EXIST.	EXIST.	0.60		5.0	
41	41	?					1	100	20	EXIST.	EXIST.	EXIST.	EXIST.				
2	2	RANGE HOOD	1.20	10.0			1	100	20	EXIST.	EXIST.	EXIST.	EXIST.	1.20	10.0		
4	4	HOT PLATE	1.68		14.0		1	100	20	EXIST.	EXIST.	EXIST.	EXIST.	1.68		14.0	
6	6	FURNACE "F-2" (1/2 HP ASSUMED)	1.13			9.4	1	100	20	EXIST.	EXIST.	EXIST.	EXIST.	1.13			9.4
8	8	FURNACE "F-3" (1/2 HP ASSUMED)	1.13	9.4			1	100	20	EXIST.	EXIST.	EXIST.	EXIST.	1.13	9.4		
10	10	REC: 218	1.20		10.0		1	100	20	EXIST.	EXIST.	EXIST.	EXIST.	0.60		5.0	
12	12	REC: 221	1.20			10.0	1	100	20	EXIST.	EXIST.	EXIST.	EXIST.	0.60			5.0
14	14	REC: 223	1.20	10.0			1	100	20	EXIST.	EXIST.	EXIST.	EXIST.	0.60	5.0		
16	16	REC: 219, 220	1.20		10.0		1	100	20	EXIST.	EXIST.	EXIST.	EXIST.	0.60		5.0	
18	18	REC: 206, 207	1.20			10.0	1	100	20	EXIST.	EXIST.	EXIST.	EXIST.	0.60			5.0
20	20	REC: 202, 210	1.20	10.0			1	100	20	EXIST.	EXIST.	EXIST.	EXIST.	0.60	5.0		
22	22	NOTE 1	2.00		17.2		1	100	20	EXIST.	EXIST.	EXIST.	EXIST.	2.00		17.2	
24	24	LIGHTS: 218, 226A&B, 227, 231	1.68			14.0	1	100	20	EXIST.	EXIST.	EXIST.	EXIST.	1.68			14.0
26	26	NOTE 2	1.80	15.0			1	100	20	EXIST.	EXIST.	EXIST.	EXIST.	1.80	15.0		
28	28	REC: 201, 206, 207, 224, 240	1.20		10.0		1	100	20	EXIST.	EXIST.	EXIST.	EXIST.	0.60		5.0	
30	30	REC: 202, 209, 220	1.20			10.0	1	100	20	EXIST.	EXIST.	EXIST.	EXIST.	0.60			5.0
32	32	REC: 203, 204, 205, 211, 212	1.20	10.0			1	100	20	EXIST.	EXIST.	EXIST.	EXIST.	0.60	5.0		
34	34	REC: 202, 217, 218, 219, 220	1.20		10.0		1	100	20	EXIST.	EXIST.	EXIST.	EXIST.	0.60		5.0	
36	36	REC: 201, 203 & LIGHTS, 203	1.20			10.0	1	100	20	EXIST.	EXIST.	EXIST.	EXIST.	1.20			10.0
38	38	LIGHTS: 202	1.80	15.0			1	100	20	EXIST.	EXIST.	EXIST.	EXIST.	1.80	15.0		
40	40	?					1	100	20	EXIST.	EXIST.	EXIST.	EXIST.				
42	42	?	0.00				1	100	20	EXIST.	EXIST.	EXIST.	EXIST.	0.00			
		TOTALS	54.86	172.6	157.8	138.5								41.06	137.6	112.8	103.5

NOTE 1: LIGHTS: 202, 225A & B / EWC: 202

REVISIONS:

This document originally issued and sealed by Walter G. Miles, P.E. No. 6740 on 02/21/07. This media should not be considered a certified document.

Master Engineers And Designers, Inc.
904 Lakeside Drive, Lynchburg, VA 24501
434-846-1350 Fax: 434-846-1351

INFORMATION TECHNOLOGY BUILDING
INFORMATION TECHNOLOGY DEPARTMENT
CITY OF LYNCHBURG, VIRGINIA

3550 YOUNG PLACE
LYNCHBURG, VIRGINIA

PANEL SCHEDULES
(Sheet 7 of 11)

DATE ISSUED: 02/15/07
SCALE: NONE
JOB. NO. 262-187
DESIGNED: WGM
DRAWN: WGM
CHECKED: WGM
APPROVED: WGM

DRAWING NO.
E4.7
SHEET 23 OF 29
REVISION

PANEL "E" SCHEDULE (Existing Conditions)

PANELBOARD CHARACTERISTICS:
VOLTS: 120/208
PHASES: 1
WIRES: 3
SOLID NEUTRAL, GROUND BAR

MAIN LUGS: 200 AMPS

MINIMUM SHORT CIRCUIT RATING: 10,000 RMS SYM AMPS

LOCATION: COMPUTER ROOM: 235

CKT. NO.	POLE NO.	DESCRIPTION	CONN. KVA	CONN. AMPS L1	CONN. AMPS L2	BREAKER P	BREAKER AF	BREAKER AT	NO. & WIRE SIZE PHASE	NO. & WIRE SIZE NEUT.	NO. & WIRE SIZE EGC	CONDUIT SIZE	DEMAND KVA	DEMAND AMPS L1	DEMAND AMPS L2
1	1	SPACE & BUS ONLY				1	100								
3	3	AIR HANDLING UNIT "AHU-7" OR "AHU-8"	1.84		8.8	2	100	20	EXIST.	EXIST.	EXIST.	EXIST.	1.84		8.8
	5	(1 HP ASSUMED)		8.8					EXIST.					8.8	
7	7	AIR HANDLING UNIT "AHU-7" OR "AHU-8"	1.84		8.8	2	100	20	EXIST.	EXIST.	EXIST.	EXIST.	1.84		8.8
	9	(1 HP ASSUMED)		8.8					EXIST.					8.8	
11	11	LIGHTS: 234	1.68		14.0	1	100	20	EXIST.	EXIST.	EXIST.	EXIST.	1.68		14.0
13	13	SPARE				1	100	20							
15	15	LIGHTS: 235	1.68		14.0	1	100	20	EXIST.	EXIST.	EXIST.	EXIST.	1.68		14.0
17	17	EGRESS LIGHT: 240				1	100	20	EXIST.	EXIST.	EXIST.	EXIST.			
19	19	?? TRACE IN FIELD				1	100	20	EXIST.	EXIST.	EXIST.	EXIST.			
21	21	REC: 223, 234	1.20	10.0		1	100	20	EXIST.	EXIST.	EXIST.	EXIST.	0.60	5.0	
23	23	REC: 234, 235	1.20		10.0	1	100	20	EXIST.	EXIST.	EXIST.	EXIST.	0.60		5.0
25	25	REC: 224, 225, 235	1.20	10.0		1	100	20	EXIST.	EXIST.	EXIST.	EXIST.	0.60	5.0	
27	27	REC: 225, 240	1.20		10.0	1	100	20	EXIST.	EXIST.	EXIST.	EXIST.	0.60		5.0
29	29	REC: 235	1.20	10.0		1	100	20	EXIST.	EXIST.	EXIST.	EXIST.	0.60	5.0	
31	31	REC: 235, 238	1.20		10.0	1	100	20	EXIST.	EXIST.	EXIST.	EXIST.	0.60		5.0
33	33	REC: 238, 239	1.20	10.0		1	100	20	EXIST.	EXIST.	EXIST.	EXIST.	0.60	5.0	
35	35	REC: 234 FLOOR	1.20		10.0	1	100	20	EXIST.	EXIST.	EXIST.	EXIST.	0.60		5.0
37	37	REC: 234 FLOOR	1.20	10.0		1	100	20	EXIST.	EXIST.	EXIST.	EXIST.	0.60	5.0	
	39	SPACE & BUS ONLY				1	100								
	41	"				"	"								
	2	SPARE				1	100	20							
	4	"				1	100	20							
	6	"				1	100	20							
8	8	REC. & AIR HANDLERS	1.20		10.0	1	100	20	EXIST.	EXIST.	EXIST.	EXIST.	0.60		5.0
10	10	FURNACE "F-6" (1/2 HP ASSUMED)	1.13	9.4		1	100	20	EXIST.	EXIST.	EXIST.	EXIST.	1.13	9.4	
12	12	LIGHTS: 235 / EXIT LIGHTS 202 & 235	0.24		2.0	1	100	20	EXIST.	EXIST.	EXIST.	EXIST.	0.24		2.0
14	14	LIGHTS & EXIT LIGHT: 235	1.68	14.0		1	100	20	EXIST.	EXIST.	EXIST.	EXIST.	1.68	14.0	
16	16	LIGHTS: RM. 238, 239 & EGRESS LIGHT RM. 235	0.80		6.7	1	100	20	EXIST.	EXIST.	EXIST.	EXIST.	0.80		6.7
18	18	?? TRACE IN FIELD				1	100	20	EXIST.	EXIST.	EXIST.	EXIST.			
20	20	LIGHTS: 235	1.68		14.0	1	100	20	EXIST.	EXIST.	EXIST.	EXIST.	1.68		14.0
22	22	REC: 235	1.20	10.0		1	100	20	EXIST.	EXIST.	EXIST.	EXIST.	0.60	5.0	
24	24	REC: 235	1.20		10.0	1	100	20	EXIST.	EXIST.	EXIST.	EXIST.	0.60		5.0
26	26	REC: 235	1.20	10.0		1	100	20	EXIST.	EXIST.	EXIST.	EXIST.	0.60	5.0	
28	28	REC: 235	1.20		10.0	1	100	20	EXIST.	EXIST.	EXIST.	EXIST.	0.60		5.0
30	30	REC: 235	1.20	10.0		1	100	20	EXIST.	EXIST.	EXIST.	EXIST.	0.60	5.0	
32	32	REC: 235, 238, 239	1.20		10.0	1	100	20	EXIST.	EXIST.	EXIST.	EXIST.	0.60		5.0
34	34	SPARE				2	100	30							
	36														
	38	SPACE & BUS ONLY				1	100								
	40	"			0.0	"	"								0.0
	42	"	0.00			"	"						0.00		
		TOTALS	31.77	121.0	148.3								22.17	81.0	108.3

PANEL "E" SCHEDULE (Replacement)

EXISTING BREAKERS MAY BE REUSED

PANELBOARD CHARACTERISTICS:
VOLTS: 120/208
PHASES: 3
WIRES: 4
SOLID NEUTRAL, GROUND BAR

MAIN LUGS: 200 AMPS

MINIMUM SHORT CIRCUIT RATING: 10,000 RMS SYM AMPS

LOCATION: UTILITY CLOSET, 235B

CKT. NO.	POLE NO.	DESCRIPTION	CONN. KVA	CONN. AMPS A	CONN. AMPS B	CONN. AMPS C	BREAKER P	BREAKER AF	BREAKER AT	NO. & WIRE SIZE PHASE	NO. & WIRE SIZE NEUT.	NO. & WIRE SIZE EGC	CONDUIT SIZE	DEMAND KVA	DEMAND AMPS A	DEMAND AMPS B	DEMAND AMPS C
1	1	SPACE & BUS ONLY					1	100									
3	3	SPARE					2	100	20								
	5																
7	7	SPARE					2	100	20								
	9																
11	11	LIGHTS: 235	1.68			14.0	1	100	20	#12	#12	#12	3/4"	1.68			14.0
13	13	SPARE					1	100	20								
15	15	SPARE					1	100	20								
17	17	SPARE					1	100	20								
19	19	?					1	100	20	EXIST.	EXIST.	EXIST.	EXIST.				
21	21	SPARE					1	100	20								
23	23	SPARE					1	100	20								
25	25	SPARE					1	100	20								
27	27	SPARE					1	100	20								
29	29	REC: 235G	1.20			10.0	1	100	20	EXIST.	EXIST.	EXIST.	EXIST.	0.60			5.0
31	31	REC: 235G, 238	1.20	10.0			1	100	20	EXIST.	EXIST.	EXIST.	EXIST.	0.60	5.0		
33	33	REC: 238, 239	1.20		10.0		1	100	20	EXIST.	EXIST.	EXIST.	EXIST.	0.60		5.0	
35	35	SPARE					1	100	20								
37	37	SPARE					1	100	20								
	39	SPACE & BUS ONLY					1	100									
	41	"					"	"									
	2	SPARE					1	100	20								
	4	"					1	100	20								
	6	"					1	100	20								
8	8	REC. & AIR HANDLERS	1.20	10.0			1	100	20	EXIST.	EXIST.	EXIST.	EXIST.	0.60	5.0		
10	10	SPARE					1	100	20								
12	12	SPARE					1	100	20								
14	14	SPARE					1	100	20								
16	16	LIGHTS: 235, 238, 239	1.16		9.7		1	100	20	#12	#12	#12	4/3"	1.16		9.7	
18	18	?					1	100	20	EXIST.	EXIST.	EXIST.	EXIST.				
20	20	SPARE					1	100	20								
22	22	REC: 235G	1.20		10.0		1	100	20	EXIST.	EXIST.	EXIST.	EXIST.	0.60		5.0	
24	24	REC: 235G	1.20			10.0	1	100	20	EXIST.	EXIST.	EXIST.	EXIST.	0.60			5.0
26	26	REC: 235G	1.20	10.0			1	100	20	EXIST.	EXIST.	EXIST.	EXIST.	0.60	5.0		
28	28	REC: 235G	1.20		10.0		1	100	20	EXIST.	EXIST.	EXIST.	EXIST.	0.60		5.0	
30	30	REC: 235G	1.20			10.0	1	100	20	EXIST.	EXIST.	EXIST.	EXIST.	0.60			5.0
32	32	REC: 235G, 238, 239	1.20	10.0			1	100	20	EXIST.	EXIST.	EXIST.	EXIST.	0.60	5.0		
34	34	SPARE					2	100	30								
	36																
	38	SPACE & BUS ONLY					1	100									
	40	"					"	"									
	42	"	0.00				"	"						0.00			
		TOTALS	14.84	40.0	39.7	44.0								8.84	20.0	24.7	29.0

REVISIONS:

This document originally issued and sealed by Walter G. Miles, P.E. No. 6740 on 02/21/07. This media should not be considered a certified document.

Master Engineers And Designers, Inc.
904 Lakeside Drive, Lynchburg, VA 24501
434-846-1350 Fax: 434-846-1351

INFORMATION TECHNOLOGY BUILDING
INFORMATION TECHNOLOGY DEPARTMENT
CITY OF LYNCHBURG, VIRGINIA

3550 YOUNG PLACE
LYNCHBURG, VIRGINIA

PANEL SCHEDULES
(Sheet 8 of 11)

DATE ISSUED: 02/15/07
SCALE: NONE
JOB. NO. 262-187
DESIGNED: WGM
DRAWN: WGM
CHECKED: WGM
APPROVED: WGM

DRAWING NO.
E4.8
SHEET 24 OF 29
REVISION

PANEL "F" SCHEDULE (Existing Conditions)

PANELBOARD CHARACTERISTICS:
VOLTS: 120/208
PHASES: 1
WIRES: 3
SOLID NEUTRAL, GROUND BAR

MAIN BREAKER: 200 AMPS (UNUSED, PANEL FED FROM UPS VIA 90 AT BRANCH BREAKER)
MINIMUM SHORT CIRCUIT RATING: 10,000 RMS SYM AMPS
LOCATION: COMPUTER ROOM, 235

CKT. NO.	POLE NO.	DESCRIPTION	CONN. KVA	CONN. AMPS L1	CONN. AMPS L2	BREAKER P	BREAKER AF	BREAKER AT	NO. & WIRE SIZE PHASE	NO. & WIRE SIZE NEUT.	NO. & WIRE SIZE EGC	CONDUIT SIZE	DEMAND KVA	DEMAND AMPS L1	DEMAND AMPS L2
1	1	RECEPTACLES	1.20	10.0		1	100	20	EXIST.	EXIST.	EXIST.	EXIST.	1.20	10.0	
3	3	RECEPTACLES	1.20		10.0	1	100	20	EXIST.	EXIST.	EXIST.	EXIST.	1.20		10.0
5	5	RECEPTACLES	1.20	10.0		1	100	20	EXIST.	EXIST.	EXIST.	EXIST.	1.20	10.0	
7	7	RECEPTACLES	1.20		10.0	1	100	20	EXIST.	EXIST.	EXIST.	EXIST.	1.20		10.0
9	9	RECEPTACLES	1.20	10.0		1	100	20	EXIST.	EXIST.	EXIST.	EXIST.	1.20	10.0	
11	11	RECEPTACLES	1.20		10.0	1	100	20	EXIST.	EXIST.	EXIST.	EXIST.	1.20		10.0
13	13	RECEPTACLES	1.20	10.0		1	100	20	EXIST.	EXIST.	EXIST.	EXIST.	1.20	10.0	
15	15	RECEPTACLES	1.20		10.0	1	100	20	EXIST.	EXIST.	EXIST.	EXIST.	1.20		10.0
17	17	RECEPTACLES	1.20	10.0		1	100	20	EXIST.	EXIST.	EXIST.	EXIST.	1.20	10.0	
19	19	RECEPTACLES	1.20		10.0	1	100	20	EXIST.	EXIST.	EXIST.	EXIST.	1.20		10.0
21	21	RECEPTACLES	1.20	10.0		1	100	20	EXIST.	EXIST.	EXIST.	EXIST.	1.20	10.0	
23	23	RECEPTACLES	1.20		10.0	1	100	20	EXIST.	EXIST.	EXIST.	EXIST.	1.20		10.0
25	25	RECEPTACLES	1.20	10.0		1	100	20	EXIST.	EXIST.	EXIST.	EXIST.	1.20	10.0	
27	27	RECEPTACLES	1.20		10.0	1	100	20	EXIST.	EXIST.	EXIST.	EXIST.	1.20		10.0
29	29	RECEPTACLES	1.20	10.0		1	100	20	EXIST.	EXIST.	EXIST.	EXIST.	1.20	10.0	
31	31	RECEPTACLES / TI POWER SUPPLY	1.20		10.0	1	100	20	EXIST.	EXIST.	EXIST.	EXIST.	1.20		10.0
33	33	RECEPTACLES / TI POWER SUPPLY	1.20	10.0		1	100	15	EXIST.	EXIST.	EXIST.	EXIST.	1.20	10.0	
	35	SPACE & BUS ONLY				1	100								
	37	"				"	"								
	39	"				"	"								
	41	"				"	"								
2	2	RECEPTACLES	1.20	10.0		1	100	20	EXIST.	EXIST.	EXIST.	EXIST.	1.20	10.0	
4	4	RECEPTACLES	1.20		10.0	1	100	20	EXIST.	EXIST.	EXIST.	EXIST.	1.20		10.0
6	6	RECEPTACLES	1.20	10.0		1	100	20	EXIST.	EXIST.	EXIST.	EXIST.	1.20	10.0	
8	8	RECEPTACLES	1.20		10.0	1	100	20	EXIST.	EXIST.	EXIST.	EXIST.	1.20		10.0
10	10	RECEPTACLES	1.20	10.0		1	100	20	EXIST.	EXIST.	EXIST.	EXIST.	1.20	10.0	
12	12	RECEPTACLES	1.20		10.0	1	100	20	EXIST.	EXIST.	EXIST.	EXIST.	1.20		10.0
14	14	RECEPTACLES	1.20	10.0		1	100	20	EXIST.	EXIST.	EXIST.	EXIST.	1.20	10.0	
16	16	RECEPTACLES	1.20		10.0	1	100	20	EXIST.	EXIST.	EXIST.	EXIST.	1.20		10.0
18	18	RECEPTACLES	1.20	10.0		1	100	20	EXIST.	EXIST.	EXIST.	EXIST.	1.20	10.0	
20	20	RECEPTACLES	1.20		10.0	1	100	20	EXIST.	EXIST.	EXIST.	EXIST.	1.20		10.0
22	22	RECEPTACLES	1.20	10.0		1	100	20	EXIST.	EXIST.	EXIST.	EXIST.	1.20	10.0	
24	24	RECEPTACLES	1.20		10.0	1	100	20	EXIST.	EXIST.	EXIST.	EXIST.	1.20		10.0
26	26	RECEPTACLES	1.20	10.0		1	100	20	EXIST.	EXIST.	EXIST.	EXIST.	1.20	10.0	
28	28	RECEPTACLES	1.20		10.0	1	100	20	EXIST.	EXIST.	EXIST.	EXIST.	1.20		10.0
30	30	RECEPTACLES	1.20	10.0		1	100	20	EXIST.	EXIST.	EXIST.	EXIST.	1.20	10.0	
32	32	RECEPTACLES	1.20		10.0	1	100	20	EXIST.	EXIST.	EXIST.	EXIST.	1.20		10.0
	34	SPACE & BUS ONLY				1	100								
	36	"				"	"								
	38	"				"	"								
40	40	UPS, SERVICE DISCONNECT			0	2	100	90	EXIST.	EXIST.	EXIST.	EXIST.			0
	42		0.00						EXIST.				0.00		
		TOTALS	39.60	170.0	160.0								39.60	170.0	160.0

PANEL "F" SCHEDULE (Reworked Conditions)

PANELBOARD CHARACTERISTICS:
VOLTS: 120/208
PHASES: 1
WIRES: 3
SOLID NEUTRAL, GROUND BAR

MAIN BREAKER: 200 AMPS (UNUSED, PANEL FED FROM UPS VIA 90 AT BRANCH BREAKER)
MINIMUM SHORT CIRCUIT RATING: 10,000 RMS SYM AMPS
LOCATION: UTILITY CLOSET, 235B

CKT. NO.	POLE NO.	DESCRIPTION	CONN. KVA	CONN. AMPS L1	CONN. AMPS L2	BREAKER P	BREAKER AF	BREAKER AT	NO. & WIRE SIZE PHASE	NO. & WIRE SIZE NEUT.	NO. & WIRE SIZE EGC	CONDUIT SIZE	DEMAND KVA	DEMAND AMPS L1	DEMAND AMPS L2
1	1	RECEPTACLES	1.20	10.0		1	100	20	EXIST.	EXIST.	EXIST.	EXIST.	1.20	10.0	
3	3	RECEPTACLES	1.20		10.0	1	100	20	EXIST.	EXIST.	EXIST.	EXIST.	1.20		10.0
5	5	RECEPTACLES	1.20	10.0		1	100	20	EXIST.	EXIST.	EXIST.	EXIST.	1.20	10.0	
7	7	RECEPTACLES	1.20		10.0	1	100	20	EXIST.	EXIST.	EXIST.	EXIST.	1.20		10.0
9	9	RECEPTACLES	1.20	10.0		1	100	20	EXIST.	EXIST.	EXIST.	EXIST.	1.20	10.0	
11	11	RECEPTACLES	1.20		10.0	1	100	20	EXIST.	EXIST.	EXIST.	EXIST.	1.20		10.0
13	13	RECEPTACLES	1.20	10.0		1	100	20	EXIST.	EXIST.	EXIST.	EXIST.	1.20	10.0	
15	15	RECEPTACLES	1.20		10.0	1	100	20	EXIST.	EXIST.	EXIST.	EXIST.	1.20		10.0
17	17	RECEPTACLES	1.20	10.0		1	100	20	EXIST.	EXIST.	EXIST.	EXIST.	1.20	10.0	
19	19	RECEPTACLES	1.20		10.0	1	100	20	EXIST.	EXIST.	EXIST.	EXIST.	1.20		10.0
21	21	RECEPTACLES	1.20	10.0		1	100	20	EXIST.	EXIST.	EXIST.	EXIST.	1.20	10.0	
23	23	RECEPTACLES	1.20		10.0	1	100	20	EXIST.	EXIST.	EXIST.	EXIST.	1.20		10.0
25	25	RECEPTACLES	1.20	10.0		1	100	20	EXIST.	EXIST.	EXIST.	EXIST.	1.20	10.0	
27	27	RECEPTACLES	1.20		10.0	1	100	20	EXIST.	EXIST.	EXIST.	EXIST.	1.20		10.0
29	29	RECEPTACLES	1.20	10.0		1	100	20	EXIST.	EXIST.	EXIST.	EXIST.	1.20	10.0	
31	31	RECEPTACLES / TI POWER SUPPLY	1.20		10.0	1	100	20	EXIST.	EXIST.	EXIST.	EXIST.	1.20		10.0
33	33	RECEPTACLES / TI POWER SUPPLY	1.20	10.0		1	100	15	EXIST.	EXIST.	EXIST.	EXIST.	1.20	10.0	
	35	SPACE & BUS ONLY				1	100								
	37	"				"	"								
	39	"				"	"								
	41	"				"	"								
2	2	RECEPTACLES	1.20	10.0		1	100	20	EXIST.	EXIST.	EXIST.	EXIST.	1.20	10.0	
4	4	RECEPTACLES	1.20		10.0	1	100	20	EXIST.	EXIST.	EXIST.	EXIST.	1.20		10.0
6	6	RECEPTACLES	1.20	10.0		1	100	20	EXIST.	EXIST.	EXIST.	EXIST.	1.20	10.0	
8	8	RECEPTACLES	1.20		10.0	1	100	20	EXIST.	EXIST.	EXIST.	EXIST.	1.20		10.0
10	10	RECEPTACLES	1.20	10.0		1	100	20	EXIST.	EXIST.	EXIST.	EXIST.	1.20	10.0	
12	12	RECEPTACLES	1.20		10.0	1	100	20	EXIST.	EXIST.	EXIST.	EXIST.	1.20		10.0
14	14	RECEPTACLES	1.20	10.0		1	100	20	EXIST.	EXIST.	EXIST.	EXIST.	1.20	10.0	
16	16	RECEPTACLES	1.20		10.0	1	100	20	EXIST.	EXIST.	EXIST.	EXIST.	1.20		10.0
18	18	RECEPTACLES	1.20	10.0		1	100	20	EXIST.	EXIST.	EXIST.	EXIST.	1.20	10.0	
20	20	RECEPTACLES	1.20		10.0	1	100	20	EXIST.	EXIST.	EXIST.	EXIST.	1.20		10.0
22	22	RECEPTACLES	1.20	10.0		1	100	20	EXIST.	EXIST.	EXIST.	EXIST.	1.20	10.0	
24	24	RECEPTACLES	1.20		10.0	1	100	20	EXIST.	EXIST.	EXIST.	EXIST.	1.20		10.0
26	26	RECEPTACLES	1.20	10.0		1	100	20	EXIST.	EXIST.	EXIST.	EXIST.	1.20	10.0	
28	28	RECEPTACLES	1.20		10.0	1	100	20	EXIST.	EXIST.	EXIST.	EXIST.	1.20		10.0
30	30	RECEPTACLES	1.20	10.0		1	100	20	EXIST.	EXIST.	EXIST.	EXIST.	1.20	10.0	
32	32	RECEPTACLES	1.20		10.0	1	100	20	EXIST.	EXIST.	EXIST.	EXIST.	1.20		10.0
	34	SPACE & BUS ONLY				1	100								
	36	"				"	"								
	38	"				"	"								
40	40	UPS, SERVICE DISCONNECT			0	2	100	90	EXIST.	EXIST.	EXIST.	EXIST.			0
	42		0.00						EXIST.				0.00		
		TOTALS	39.60	170.0	160.0								39.60	170.0	160.0

REVISIONS:

This document originally issued and sealed by Walter G. Miles, P.E. No. 6740 on 02/21/07. This media should not be considered a certified document.

Master Engineers And Designers, Inc.
904 Lakeside Drive, Lynchburg, VA 24501
434-846-1350 Fax: 434-846-1351

INFORMATION TECHNOLOGY BUILDING
INFORMATION TECHNOLOGY DEPARTMENT
CITY OF LYNCHBURG, VIRGINIA
3550 YOUNG PLACE
LYNCHBURG, VIRGINIA

PANEL SCHEDULES
(Sheet 9 of 11)

DATE ISSUED: 02/15/07
SCALE: NONE
JOB. NO. 262-187
DESIGNED: WGM
DRAWN: WGM
CHECKED: WGM
APPROVED: WGM

DRAWING NO.
E4.9
SHEET 25 OF 29
REVISION

PANEL "OL" SCHEDULE (Existing Conditions)

PANELBOARD CHARACTERISTICS:
VOLTS: 120/208
PHASES: 1
WIRES: 3
SOLID NEUTRAL, GROUND BAR

MAIN LUGS: 125 AMPS ???: 200 ???

MINIMUM SHORT CIRCUIT RATING: 10,000 RMS SYM AMPS

LOCATION: STORAGE, 131

CKT. NO.	POLE NO.	DESCRIPTION	CONN. KVA	CONN. AMPS L1	CONN. AMPS L2	BREAKER P	BREAKER AF	BREAKER AT	NO. & WIRE SIZE PHASE	NO. & WIRE SIZE NEUT.	NO. & WIRE SIZE EGC	CONDUIT SIZE	DEMAND KVA	DEMAND AMPS L1	DEMAND AMPS L2
1	1	LIGHTS - WALL PACKS	???			1	100	20	EXIST.	EXIST.	EXIST.	EXIST.			
3	3	SPARE (FORMER NTS SIGN)				1	100	20	EXIST.	EXIST.	EXIST.	EXIST.			
	5														
	7														
	9														
	11														
	2	SPARE (FORMER NTS SIGN)				1	100	20	EXIST.	EXIST.	EXIST.	EXIST.			
	4	LIGHTS - WALL PACKS	???			1	100	20	EXIST.	EXIST.	EXIST.	EXIST.			
	6														
	8														
	10														
	12														
		TOTALS	0.00	0.0	0.0								0.00	0.0	0.0

PANEL "OL" SCHEDULE (Reworked Conditions)

PANELBOARD CHARACTERISTICS:
VOLTS: 120/208
PHASES: 1
WIRES: 3
SOLID NEUTRAL, GROUND BAR

MAIN LUGS: 125 AMPS ???: 200 ???

MINIMUM SHORT CIRCUIT RATING: 10,000 RMS SYM AMPS

LOCATION: STORAGE, 131

CKT. NO.	POLE NO.	DESCRIPTION	CONN. KVA	CONN. AMPS L1	CONN. AMPS L2	BREAKER P	BREAKER AF	BREAKER AT	NO. & WIRE SIZE PHASE	NO. & WIRE SIZE NEUT.	NO. & WIRE SIZE EGC	CONDUIT SIZE	DEMAND KVA	DEMAND AMPS L1	DEMAND AMPS L2
1	1	LIGHTS: WALL PACKS	1.44	12.0		1	100	20	EXIST.	EXIST.	EXIST.	EXIST.	1.44	12.0	
3	3	SPARE (FORMER NTS SIGN)				1	100	20	EXIST.	EXIST.	EXIST.	EXIST.			
	5														
	7														
	9														
	11														
2	2	SPARE (FORMER NTS SIGN)				1	100	20	EXIST.	EXIST.	EXIST.	EXIST.			
4	4	LIGHTS: WALL PACKS	0.96		8.0	1	100	20	EXIST.	EXIST.	EXIST.	EXIST.	0.96		8.0
	6														
	8														
	10														
	12														
		TOTALS	2.40	12.0	8.0								2.40	12.0	8.0

REVISIONS:

This document originally issued and sealed by Walter G. Miles, P.E. No. 6740 on 02/21/07. This media should not be considered a certified document.

Master Engineers And Designers, Inc.
904 Lakeside Drive, Lynchburg, VA 24501
434-846-1350 Fax: 434-846-1351

INFORMATION TECHNOLOGY BUILDING
INFORMATION TECHNOLOGY DEPARTMENT
CITY OF LYNCHBURG, VIRGINIA

3550 YOUNG PLACE
LYNCHBURG, VIRGINIA

PANEL SCHEDULES
(Sheet 10 of 11)

DATE ISSUED: 02/15/07
SCALE: NONE
JOB. NO. 262-187
DESIGNED: WGM
DRAWN: WGM
CHECKED: WGM
APPROVED: WGM

DRAWING NO.
E4.10
SHEET 26 OF 29
REVISION

PANEL "DA" SCHEDULE

PANELBOARD CHARACTERISTICS:
VOLTS: 120/208
PHASES: 3
WIRES: 4
SOLID NEUTRAL, GROUND BAR

MAIN LUGS: 225 AMPS
MINIMUM SHORT CIRCUIT RATING: 22,000 RMS SYM AMPS
LOCATION: UTILITY CLOSET 235B

CKT. NO.	POLE NO.	DESCRIPTION	CONN. KVA	CONN. AMPS A	CONN. AMPS B	CONN. AMPS C	BREAKER P	BREAKER AF	BREAKER AT	NO. & WIRE SIZE PHASE	NO. & WIRE SIZE NEUT.	NO. & WIRE SIZE EGC	CONDUIT SIZE	DEMAND KVA	DEMAND AMPS A	DEMAND AMPS B	DEMAND AMPS C
1	1	LIGHTS: 202, 203	0.46	3.4			1	100	20	#12	#12	#12	3/4"	0.46	3.4		
3	3	LIGHTS: 202, 206, 207, 224	1.80		15.0		1	100	20	#12	#12	#12	3/4"	1.80		15.0	
5	5	LIGHTS: 230A-C, 234B-D	1.54			12.8	1	100	20	#12	#12	#12	3/4"	1.54			12.8
7	7	LIGHTS: 234A	1.66	13.9			1	100	20	#12	#12	#12	3/4"	1.66	13.9		
9	9	LIGHTS: 235C-F	1.60		13.3		1	100	20	#12	#12	#12	3/4"	1.60		13.3	
11	11	LIGHTS: 235B	0.60			5.0	1	100	20	#12	#12	#12	3/4"	0.60			5.0
13	13	LIGHTS: S03, S04	0.30	2.5			1	100	20	#12	#12	#12	3/4"	0.30	2.5		
15	15	LIGHTS: 216, 226B	1.50		12.5		1	100	20	#12	#12	#12	3/4"	1.50		12.5	
17	17	SPARE					1	100	20								
19	19	SPARE					1	100	20								
21	21	SPARE					1	100	20								
23	23	SPARE					1	100	20								
	25	SPACE & BUS ONLY					1	100									
	27	"					"	"									
	29	"					"	"									
	31	"					"	"									
	33	"					"	"									
	35	"					"	"									
	37	"					"	"									
	39	"					"	"									
	41	"					"	"									
2	2	REC: 201	1.20	10.0			1	100	20	#12	#12	#12	3/4"	0.60	5.0		
4	4	REC: 219	1.20		10.0		1	100	20	#12	#12	#12		0.60		5.0	
6	6	REC: 220	1.20			10.0	1	100	20	#12	#12	#12	3/4"	0.60			5.0
8	8	REC: 221A	1.20	10.0			1	100	20	#12	#12	#12		0.60	5.0		
10	10	REC: 225A	1.20		10.0		1	100	20	#12	#12	#12	3/4"	0.60		5.0	
12	12	REC: 225B	1.20			10.0	1	100	20	#12	#12	#12		0.60			5.0
14	14	REC: 230A	1.20	10.0			1	100	20	#12	#12	#12		0.60	5.0		
16	16	REC: 230B	1.20		10.0		1	100	20	#12	#12	#12	3/4"	0.60		5.0	
18	18	REC: 230C	1.20			10.0	1	100	20	#12	#12	#12		0.60			5.0
20	20	REC: 234B	1.20	10.0			1	100	20	#12	#12	#12		0.60	5.0		
22	22	REC: 234C	1.20		10.0		1	100	20	#12	#12	#12	3/4"	0.60		5.0	
24	24	REC: 234D	1.20			10.0	1	100	20	#12	#12	#12		0.60			5.0
26	26	REC: 223	1.20	10.0			1	100	20	#12	#12	#12		0.60	5.0		
28	28	REC: 235A	1.20		10.0		1	100	20	#12	#12	#12	3/4"	0.60		5.0	
30	30	REC: 235A	1.20			10.0	1	100	20	#12	#12	#12		0.60			5.0
32	32	REC: 235C	1.20	10.0			1	100	20	#12	#12	#12		0.60	5.0		
34	34	REC: 235D	1.20		10.0		1	100	20	#12	#12	#12	3/4"	0.60		5.0	
36	36	REC: 235E	1.20			10.0	1	100	20	#12	#12	#12		0.60			5.0
38	38	REC: 235F	1.20	10.0			1	100	20	#12	#12	#12	3/4"	0.60	5.0		
40	40	REC: 235B	1.20		10.0		1	100	20	#12	#12	#12		0.60		5.0	
42	42	FURNACE "F-6" (ASSUME 1/2 HP)	1.13			9.4	1	100	20	#12	#12	#12	3/4"	1.13			9.4
		TOTALS	34.59	89.8	110.8	87.2								22.59	54.8	75.8	57.2

PANEL "S" SCHEDULE

PANELBOARD CHARACTERISTICS:
VOLTS: 120/208
PHASES: 3
WIRES: 4
SOLID NEUTRAL, GROUND BAR

MAIN LUGS: 225 AMPS
MINIMUM SHORT CIRCUIT RATING: 22,000 RMS SYM AMPS
LOCATION: IT CENTER, RM. 235

CKT. NO.	POLE NO.	DESCRIPTION	CONN. KVA	CONN. AMPS A	CONN. AMPS B	CONN. AMPS C	BREAKER P	BREAKER AF	BREAKER AT	NO. & WIRE SIZE PHASE	NO. & WIRE SIZE NEUT.	NO. & WIRE SIZE EGC	CONDUIT SIZE	DEMAND KVA	DEMAND AMPS A	DEMAND AMPS B	DEMAND AMPS C
1	1	LIGHTS: RM. 117A, 123A	1.37	11.4			1	100	20	#12	#12	#12	3/4"	1.37	11.4		
3	3	LIGHTS: RM. 117B, 123B, 123C, 123D	1.60		13.1		1	100	20	#12	#12	#12	3/4"	1.60		13.1	
5	5	SPARE					1	100	20								
7	7	SPARE					1	100	20								
9	9	SPARE					1	100	20								
11	11	SPARE					1	100	20								
13	13	SPARE					1	100	20								
15	15	SPARE					1	100	20								
17	17	FURNACE "F-11" (ASSUME 1/2 HP)	1.13			9.4	1	100	20	#12	#12	#12	3/4"	1.13			9.4
	19	SPACE & BUS ONLY					1	100									
	21	"					"	"									
	23	"					"	"									
	25	"					"	"									
	27	"					"	"									
	29	"					"	"									
	31	"					"	"									
	33	"					"	"									
	35	"					"	"									
	37	"					"	"									
	39	"					"	"									
	41	"					"	"									
2	2	REC: 117A	1.20	10.0			1	100	20	#12	#12			0.60	5.0		
4	4	REC: 117B	1.20		10.0		1	100	20	#12	#12	#12	3/4"	0.60		5.0	
6	6	REC: 123B	1.20			10.0	1	100	20	#12	#12			0.60			5.0
8	8	REC: 123C	1.20	10.0			1	100	20	#12	#12			0.60	5.0		
10	10	REC: 123D	1.20		10.0		1	100	20	#12	#12	#12	3/4"	0.60		5.0	
12	12	REC: 123A	1.20			10.0	1	100	20	#12	#12			0.60			5.0
	14	SPACE & BUS ONLY															
	16	"															
	18	"															
	20	"															
	22	"															
	24	"															
	26	"															
	28	"															
	30	"															
	32	"															
	34	"															
	36	"															
	38	"															
	40	"															
	42	"															
		TOTALS		11.30	31.4	33.1	29.4							7.70	21.4	23.1	19.4

REVISIONS:

This document originally issued and sealed by Walter G. Miles, P.E. No. 6740 on 02/21/07. This media should not be considered a certified document.

Master Engineers And Designers, Inc.
904 Lakeside Drive, Lynchburg, VA 24501
434-846-1350 Fax: 434-846-1351

INFORMATION TECHNOLOGY BUILDING
INFORMATION TECHNOLOGY DEPARTMENT
CITY OF LYNCHBURG, VIRGINIA

3550 YOUNG PLACE
LYNCHBURG, VIRGINIA

PANEL SCHEDULES
(Sheet 11 of 11)

DATE ISSUED: 02/15/07
SCALE: NONE
JOB. NO. 262-187
DESIGNED: WGM
DRAWN: WGM
CHECKED: WGM
APPROVED: WGM

DRAWING NO.
E4.11
SHEET 27 OF 29
REVISION

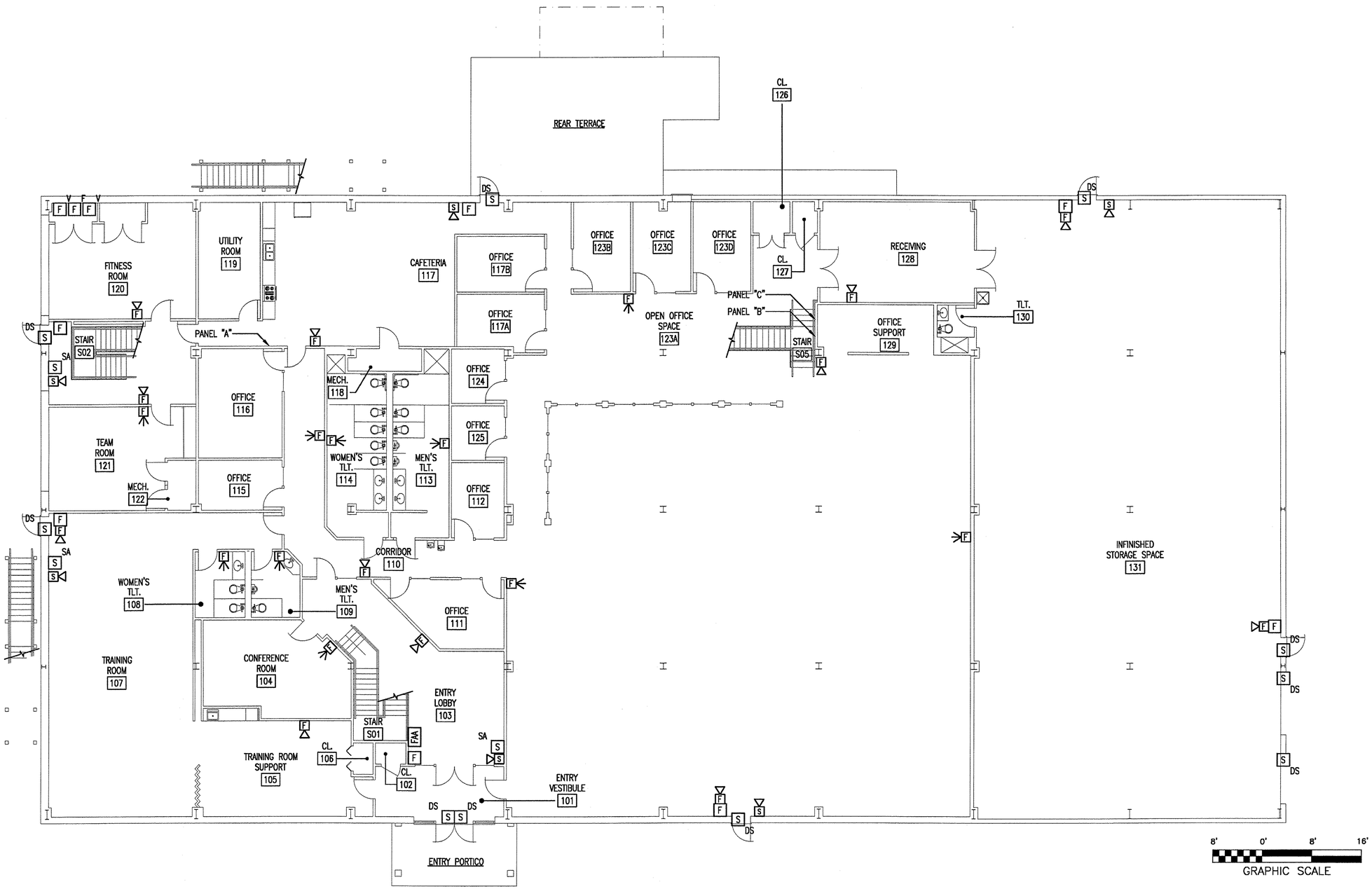

REVISIONS:

This document originally issued and sealed by Walter G. Miles, P.E. No. 6740 on 02/21/07. This media should not be considered a certified document.

Master Engineers And Designers, Inc.
904 Lakeside Drive, Lynchburg, VA 24501
434-846-1350 Fax: 434-846-1351

INFORMATION TECHNOLOGY BUILDING
INFORMATION TECHNOLOGY DEPARTMENT
CITY OF LYNCHBURG, VIRGINIA

3550 YOUNG PLACE
LYNCHBURG, VIRGINIA

FIRE & SECURUTY - LEVEL ONE
REWORKED CONDITIONS

DATE ISSUED:	02/15/07
SCALE:	GRAPHIC
JOB. NO.	262-187
DESIGNED:	WGM
DRAWN:	JND
CHECKED:	WGM
APPROVED:	WGM

DRAWING NO.
E5.1
SHEET 28 OF 29
REVISION

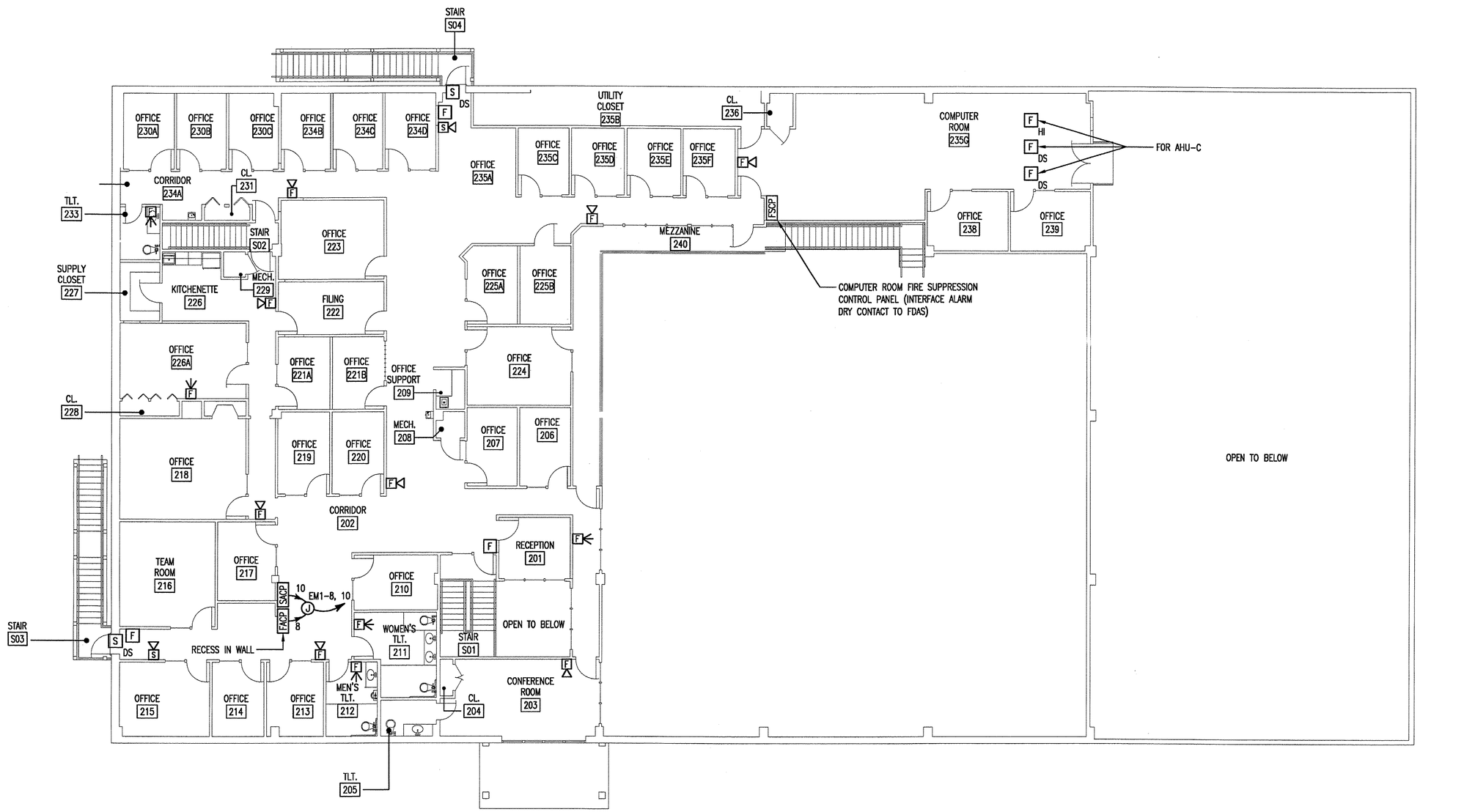

8' 0' 8' 16'
GRAPHIC SCALE

REVISIONS:

This document originally issued and sealed by Walter G. Miles, P.E. No. 6740 on 02/21/07. This media should not be considered a certified document.

Master Engineers And Designers, Inc.
904 Lakeside Drive, Lynchburg, VA 24501
434-846-1350 Fax: 434-846-1351

INFORMATION TECHNOLOGY BUILDING
INFORMATION TECHNOLOGY DEPARTMENT
CITY OF LYNCHBURG, VIRGINIA
3550 YOUNG PLACE
LYNCHBURG, VIRGINIA

FIRE & SECURITY - LEVEL TWO
REWORKED CONDITIONS

DATE ISSUED:	02/15/07
SCALE:	GRAPHIC
JOB. NO.	262-187
DESIGNED:	WGM
DRAWN:	JND
CHECKED:	WGM
APPROVED:	WGM

DRAWING NO.
E5.2
SHEET 29 OF 29
REVISION

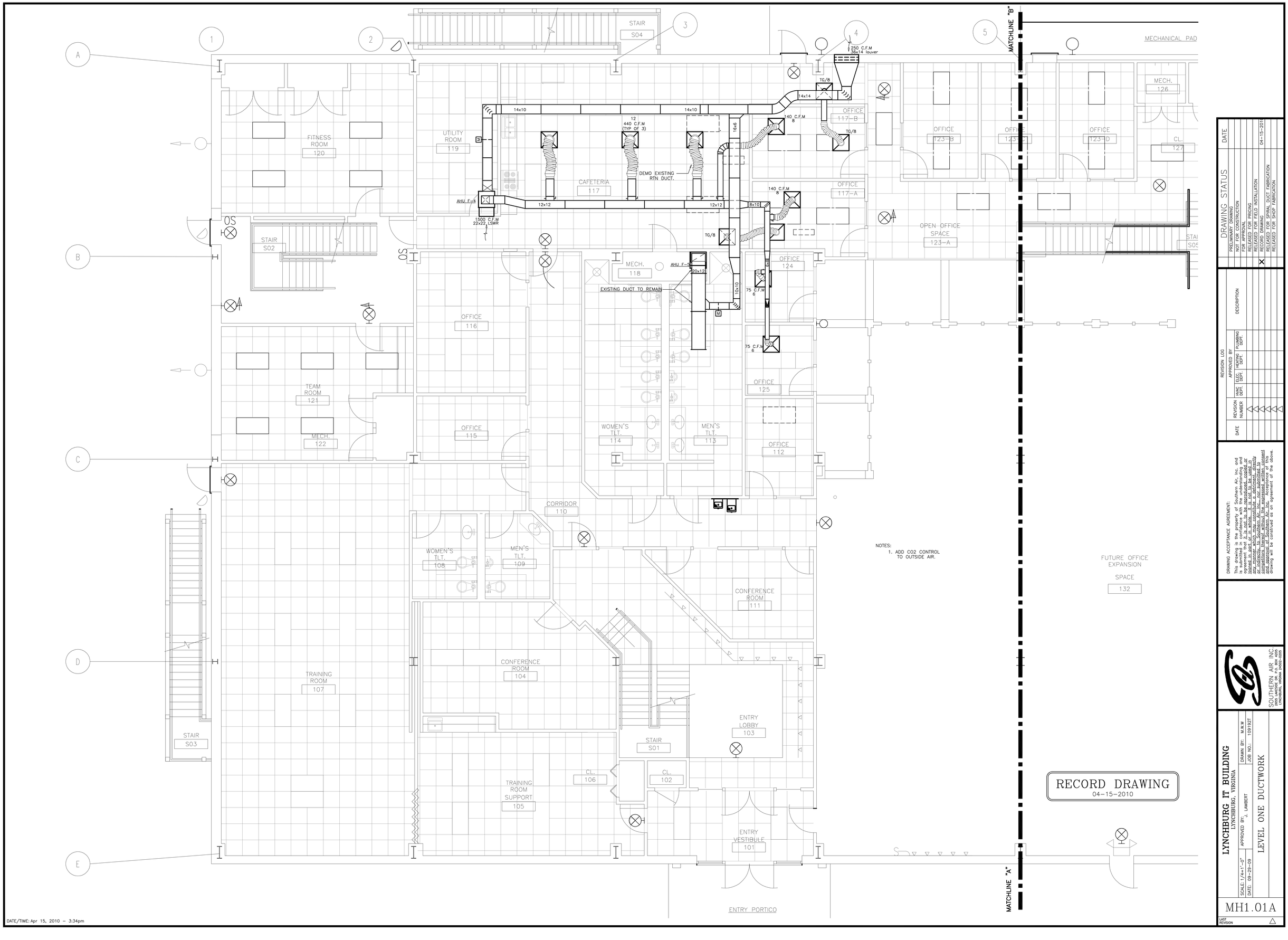

DATE/TIME: Apr 15, 2010 – 3:34pm

DRAWING STATUS

	DATE
PRELIMINARY DRAWING	
NOT FOR CONSTRUCTION	
FOR APPROVAL	
RELEASED FOR PRICING	
RELEASED FOR FIELD INSTALLATION	
X RECORD DRAWING	04-15-2010
RELEASED FOR SPIRAL DUCT FABRICATION	
RELEASED FOR SHOP FABRICATION	

REVISION LOG

DATE	REVISION NUMBER	HVAC DEPT.	ELEC. DEPT.	HEATING DEPT.	PLUMBING DEPT.	DESCRIPTION

APPROVED BY

DRAWING ACCEPTANCE AGREEMENT:

This drawing is the property of Southern Air, Inc. and is submitted for your approval. The transmittal of this document that is not to be used for construction and bearing our stamp, signifies that we have checked it and approved it as noted. It is not to be used in part or in whole, unless specifically stated in the approval and acceptance of this document by Southern Air, Inc. or indirectly, to Southern Air, Inc., for submittal to authorities for approval. Any alteration, deviation, or omission from the approved and accepted drawing without the prior written consent of Southern Air, Inc. Acceptance of this drawing will be construed as an agreement of the above.

SOUTHERN AIR, INC.
MECHANICAL CONTRACTORS
P.O. BOX 2402
LYNCHBURG, VIRGINIA 24502-2025

LYNCHBURG IT BUILDING
LYNCHBURG, VIRGINIA

SCALE: 1/4=1'-0" | APPROVED BY: J. LAMBERT | DRAWN BY: M.W.W.
DATE: 09-29-09 | JOB NO.: 109192

LEVEL ONE DUCTWORK

MH1.01A

LAST REVISION

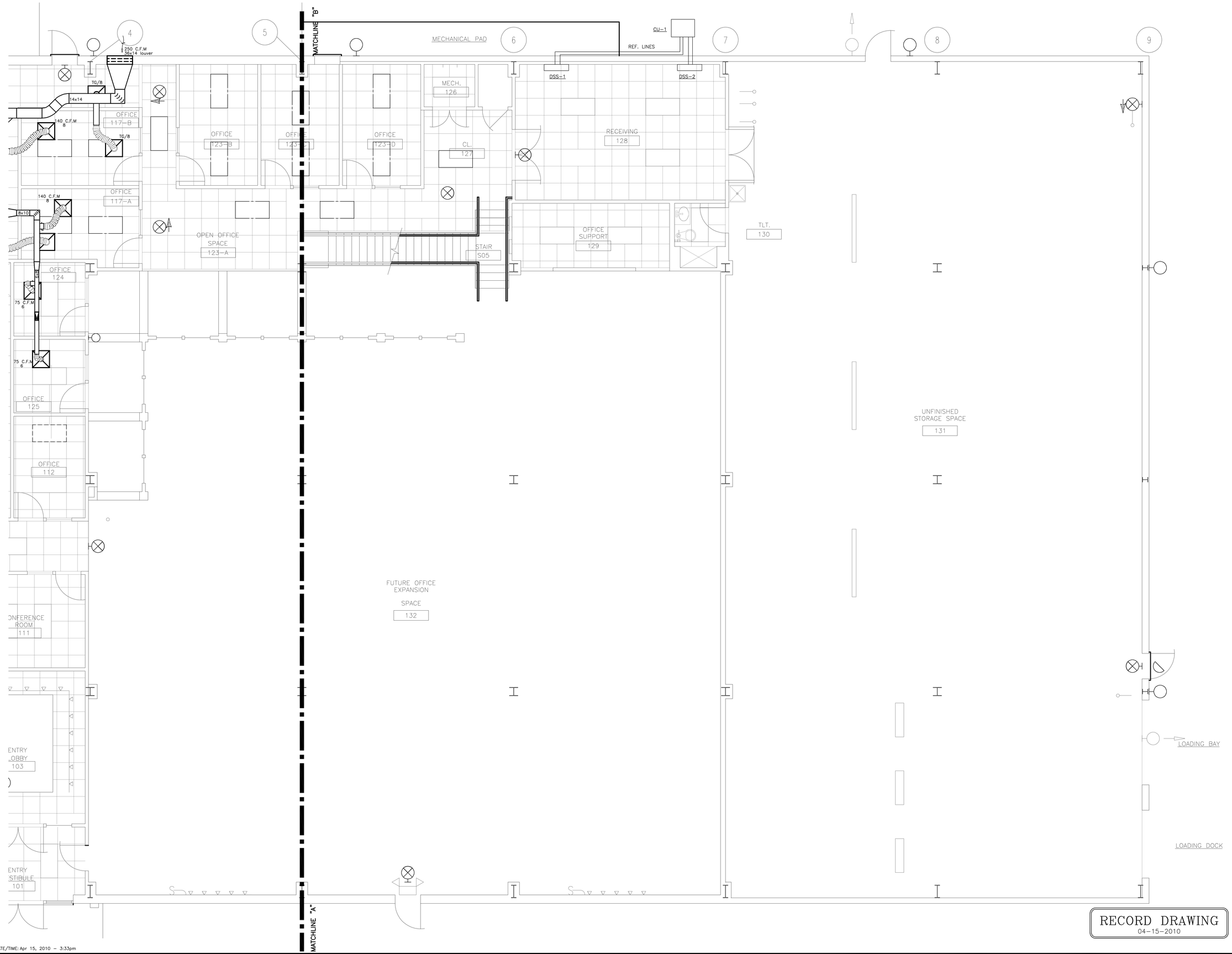

RECORD DRAWING
04-15-2010

DATE/TIME: Apr 15, 2010 - 3:33pm

DRAWING STATUS

	DATE
PRELIMINARY DRAWING	
NOT FOR CONSTRUCTION	
FOR APPROVAL	
RELEASED FOR PRICING	
RELEASED FOR FIELD INSTALLATION	
RECORD DRAWING	04-15-2010
RELEASED FOR SPIRAL DUCT FABRICATION	
RELEASED FOR SHOP FABRICATION	

REVISION LOG

DATE	REVISION NUMBER	HVAC DEPT.	ELEC. DEPT.	HEATING DEPT.	PLUMBING DEPT.	DESCRIPTION

DRAWING ACCEPTANCE AGREEMENT:

This drawing is the property of Southern Air, Inc. and is submitted for your review and approval. It is understood that no part of this drawing may be reproduced, copied, loaned or exhibited to others, nor used in any way detrimental to the interest of Southern Air, Inc., nor submitted to or disclosed to others in any manner without written permission and approval of Southern Air, Inc. Acceptance of this drawing will be construed as an agreement of the above.

SOUTHERN AIR, INC.
P.O. BOX 2405
LYNCHBURG, VIRGINIA 24505-0205

LYNCHBURG IT BUILDING

LYNCHBURG, VIRGINIA

SCALE: 1/4=1'-0"
DATE: 09-29-09
APPROVED BY:
DRAWN BY:
JOB NO.: 0091927

MH1.01B

LAST REVISION

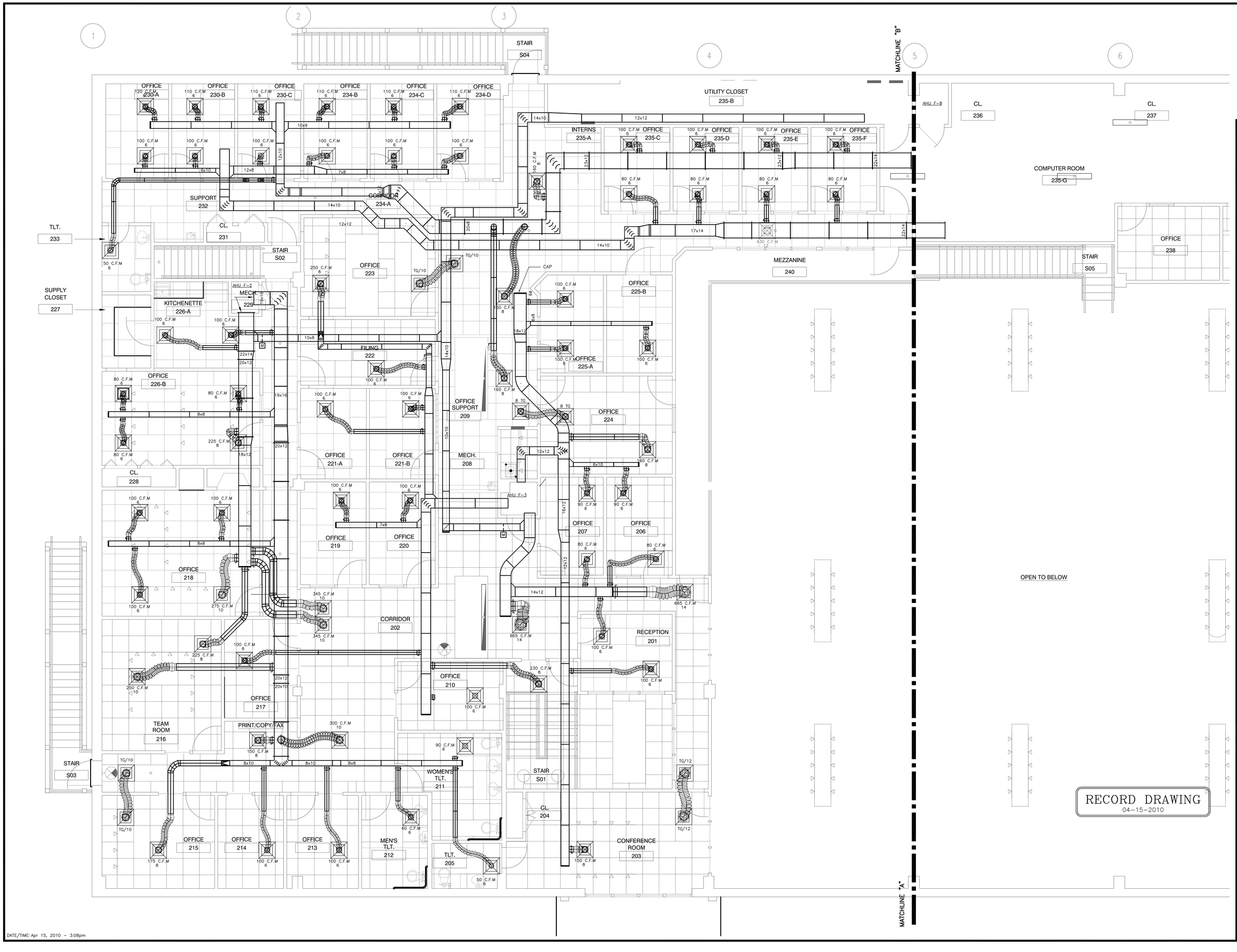

DATE/TIME: Apr 15, 2010 - 3:08pm

DRAWING STATUS

	DATE
PRELIMINARY DRAWING	
NOT FOR CONSTRUCTION	
FOR APPROVAL	
RELEASED FOR PRICING	
RELEASED FOR FIELD INSTALLATION	
RECORD DRAWING	04-15-2010
RELEASED FOR SPIRAL DUCT FABRICATION	
RELEASED FOR SHOP FABRICATION	

REVISION LOG

DATE	REVISION NUMBER	HVAC DEPT.	ELEC. DEPT.	HEATING DEPT.	PLUMBING DEPT.	DESCRIPTION

APPROVED BY

DRAWING ACCEPTANCE AGREEMENT:
This drawing is the property of Southern Air, Inc. and is submitted on the understanding and agreement that it will be kept in confidence and not disclosed in part or in whole, it is not to be used in other projects or for any purpose other than those specified for Southern Air, Inc., nor submitted to other parties without prior written consent of Southern Air, Inc. Acceptance of this drawing will be construed as an agreement of the above.

SOUTHERN AIR, INC.
1900 LAKEPOINTE AVENUE
LYNCHBURG, VIRGINIA 24502-2203

LYNCHBURG IT BUILDING
LYNCHBURG, VIRGINIA

SCALE: 1/4=1'-0" | APPROVED BY: L. LAMBERT | DRAWN BY: M.W.W.
DATE: 09-29-09 | JOB NO.: 109192T

LEVEL TWO DUCTWORK

MH1.02A

LAST REVISION

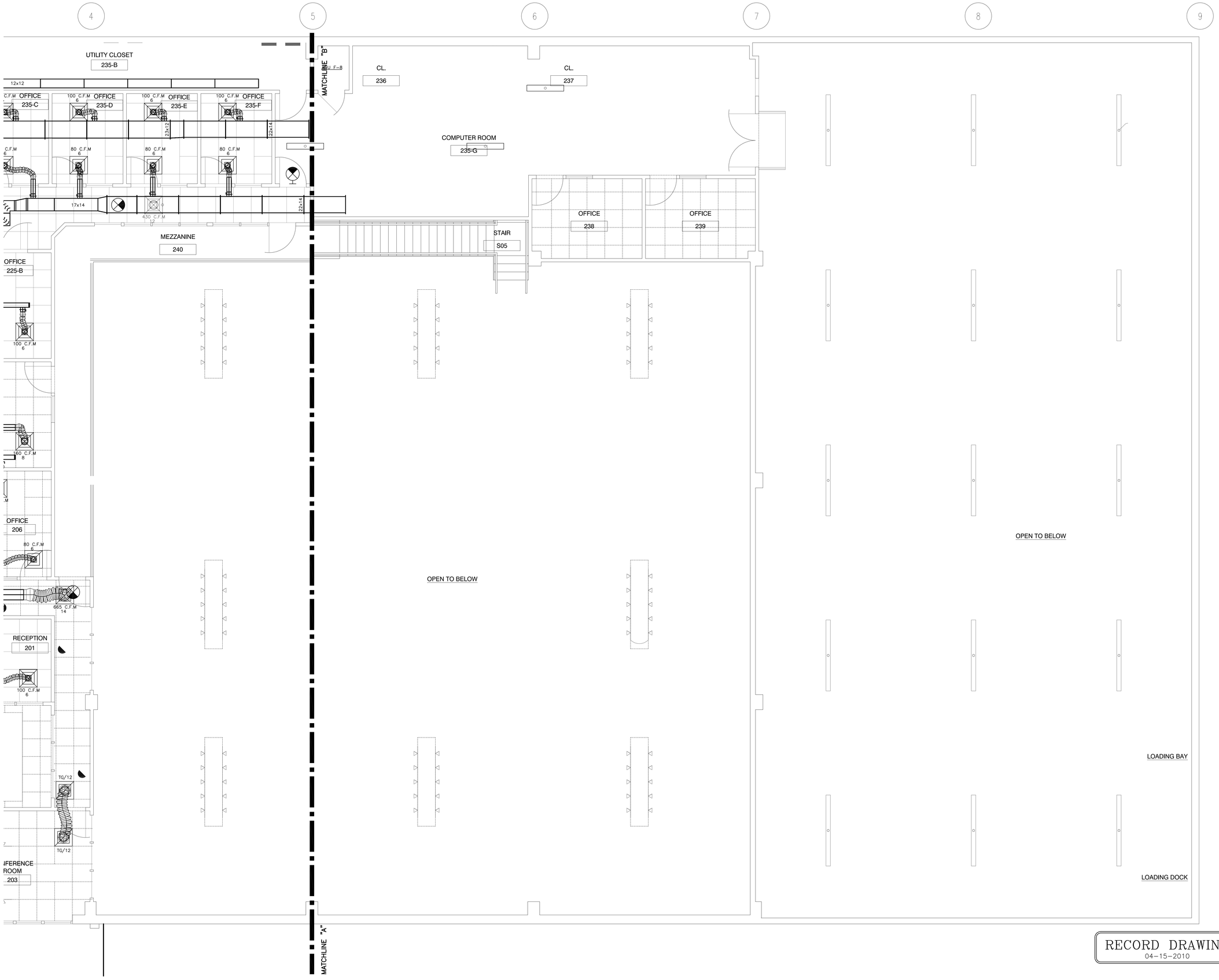

RECORD DRAWING
04-15-2010

DATE/TIME: Apr 15, 2010 – 3:07pm

DRAWING STATUS

	DATE
PRELIMINARY DRAWING	
NOT FOR CONSTRUCTION	
FOR APPROVAL	
RELEASED FOR PRICING	
RELEASED FOR FIELD INSTALLATION	
RECORD DRAWING	04-15-2010
RELEASED FOR SPIRAL DUCT FABRICATION	
RELEASED FOR SHOP FABRICATION	

REVISION LOG

DATE	REVISION NUMBER	HVAC DEPT.	ELEC. DEPT.	HEATING DEPT.	PLUMBING DEPT.	DESCRIPTION

DRAWING ACCEPTANCE AGREEMENT:

This drawing is the property of Southern Air, Inc. and is loaned to the purchaser for his use in obtaining bids and in contracting with the subcontracting and supplying trades. It is loaned with the understanding that it is not to be reproduced, copied or exhibited in any way, in whole or in part, or used in any other connection without the express written consent of Southern Air, Inc., nor submitted to outside parties without previous written consent of Southern Air, Inc. Acceptance of this drawing will be construed as an agreement of the above.

SOUTHERN AIR, INC.
3900 LAKESIDE AVENUE
LYNCHBURG, VIRGINIA 24502-2203

LYNCHBURG IT BUILDING
LYNCHBURG, VIRGINIA

SCALE: 1/4=1'-0"
DATE: 09-29-09
APPROVED BY:
DRAWN BY:
JOB NO.: 109192T

MH1.02B

LAST REVISION

INTERIOR FLOOR ADDITION & ALTERATIONS TO

CITY OF LYNCHBURG - IT BUILDING

PROJECT # IT018_YP02

LYNCHBURG, VIRGINIA

ARCHITECT

ARCHITECTURAL PARTNERS P.C.

10 NINTH STREET
LYNCHBURG, VA. 24504
phone: (434) 846-8456
fax: (434) 846-4534
email: info@ArchitecturalPartners.com
contact person: Mark Smith, Senior Architect
direct email: mark@ArchitecturalPartners.com

OWNER

CITY OF LYNCHBURG, VA
PUBLIC WORKS DEPARTMENT

BUILDINGS & GROUNDS DIVISION
800 ORCHARD STREET
LYNCHBURG, VA. 24501
phone: (434) 455-4409
fax: (434) 845-1813
email: scott.glass@lynchburgva.gov
contact person: Scott Glass, AIA

DRAWING LIST

CS1.0 COVER SHEET

ARCHITECTURAL
A1.0 FIRST FLOOR PLAN
A1.1 SECOND FLOOR PLAN

SITE MAP

NORTH

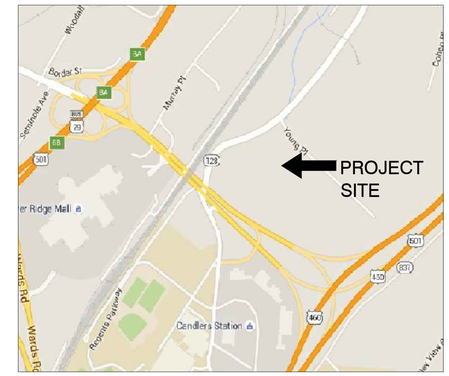

VICINTY MAP

NORTH

ABBREVIATIONS

AB	ANCHOR BOLT
ABV	ABOVE
ACST	ACOUSTIC
ACT	ACOUSTICAL CEILING TILE
AFF	ABOVE FINISHED FLOOR
AGGR	AGGREGATE
AHR	ANCHOR
AL	ALUMINUM
APC	ARCHITECTURAL PRECAST
APPROX	APPROXIMATE
ARCH	ARCHITECTURAL
AVG	AVERAGE
BD	BOARD
BET	BETWEEN
BLDG	BUILDING
BLK	BLOCKING
BM	BEAM
BOT	BOTTOM
BRG	BEARING
BUR	BUILT-UP ROOF(ING)
C/C	CENTER TO CENTER
CIP	CAST-IN-PLACE, CAST IRON PIPE
CJ	CONTROL JOINT
℄, CL	CENTER LINE
CFS	COLD FORMED STEEL
CFMF	COLD FORMED METAL FRAMING
CLG	CEILING
CLR	CLEAR
CMU	CONCRETE MASONRY UNIT
COL	COLUMN
COMP	COMPOSITE
CONC	CONCRETE, CONCENTRATED
CONN	CONNECT(ED), CONNECTION
CONSTR	CONSTRUCTION
CONT	CONTINUATION, CONTINUOUS, CONTROL
CONTR	CONTRACT, CONTRACTOR
COORD	COORDINATE
CORR	CORRIDOR, CORRUGATED
CT	CERAMIC TILE
CTNG	COATING
CTR	CENTER
CTSK	COUNTERSUNK
	DEPTH, DEEP
DBL	DOUBLE
DEPT	DEPARTMENT
DET	DETAIL(ED)
DIA	DIAMETER
DIAG	DIAGONAL, DIAGRAM
DIM	DIMENSION
DK	DECK
DN	DOWN
DOH	DOOR OPENING HEIGHT
DOW	DOOR OPENING WIDTH
DP	DAMPPROOFING
DR	DOOR
DS	DOWNSPOUT
DWG	DRAWING
EA	EACH
EIFS	EXTERIOR INSULATION FINISH SYSTEM
EJ	EXPANSION JOINT
EL	ELEVATION
ELEC	ELECTRIC(AL)
ELEV	ELEVATOR, ELEVATION
ENCL	ENCLOSE(URE)
EQ	EQUAL
EQPT	EQUIPMENT
EWC	ELECTRIC WATER COOLER
EXH	EXHAUST
EXIST	EXISTING
EXP	EXPOSED
EXPN	EXPANSION
EXT	EXTERIOR
FWS	FLASHING & WEEPS
FD	FLOOR DRAIN
FDN	FOUNDATION
F/F	FACE TO FACE
FIN	FINISH(ED)
FL	FLOOR
FRP	FIBERGLASS REINFORCED POLYESTER
FT	FOOT(FEET)
FRT	FIRE RETARDANT TREATED
FTG	FOOTING
FUT	FUTURE
GA	GAGE
GAL	GALLON
GALV	GALVANIZE(D)
GL	GLASS
GRTG	GRATING
GWB	GYPSUM WALLBOARD
GYP	GYPSUM
H	HEIGHT, HIGH
HB	HOSE BIBB
HBD	HARDBOARD
HC	HANDICAPPED
HDW	HARDWARE
HDWD	HARDWOOD
HM	HOLLOW METAL
HMD	HOLLOW METAL DOOR
HMF	HOLLOW METAL FRAME
HOR	HORIZONTAL
HPT	HIGH POINT
HR	HANDRAIL
HT	HEIGHT
HVAC	HEATING, VENTILATING & AIR CONDITIONING
HW	HOT WATER
ID	INSIDE DIAMETER
IN	INCH
INCL	INCLUSIVE
INSTL	INSTALL(ED)
INSUL	INSULATE(ED)(ING)(ION)
INT	INTERIOR
INTMD	INTERMEDIATE
ISOL	ISOLATION
JAN	JANITOR
JST	JOIST
JT	JOINT(S), POWER TRANSMITTER
KOP	KNOCKOUT PANEL
L	LENGTH, LINE, LONG
LAB	LABORATORY
LAM	LAMINATE
LAV	LAVATORY
LB	POUND
LF	LINEAR FOOT
LG	LENGTH, LONG
LIN	LINEAR
LL	LIVE LOAD
LLH	LONG LEG HORIZONTAL
LLV	LONG LEG VERTICAL
LOC	LOCATION
LONG	LONGITUDINAL
LPT	LOW POINT
MACH	MACHINE
MAS	MASONRY
MATL	MATERIAL
MAX	MAXIMUM
MCT	MARMOLEUM COMPOSITE TILE
MDF	MEDIUM DENSITY FIBERBOARD
MECH	MECHANICAL
MEZZ	MEZZANINE
MFR	MANUFACTURER
MIN	MINIMUM
MISC	MISCELLANEOUS
MO	MASONRY OPENING
MOH	MASONRY OPENING HEIGHT
MOW	MASONRY OPENING WIDTH
MT	MOUNT
MTL	METAL
MUL	MULLION
MWP	MEMBRANE WATERPROOFING
N	NORTH
NIC	NOT IN CONTRACT
NO.	NUMBER
NOM	NOMINAL
NST	NONSLIP TREAD
NTS	NOT TO SCALE
OAH	OVERALL HEIGHT
OAW	OVERALL WIDTH
OC	ON CENTER
OD	OUTSIDE DIAMETER
OFCI	OWNER FURNISHED CONTRACTOR INSTALLED
OFOI	OWNER FURNISHED OWNER INSTALLED
OFF	OFFICE
OH	OVERHEAD
OPNG	OPENING
OPP	OPPOSITE
O/O	OUT TO OUT
PI	PERIMETER INSULATION
PL	PLATE
ℙ	PROPERTY LINE
PLAM	PLASTIC LAMINATE
PLAS	PLASTER
PLYWD	PLYWOOD
PNLG	PANELING
PR	PAIR
PSF	POUNDS PER SQUARE FOOT
PSI	POUNDS PER SQUARE INCH
PT	PRESSURE TREATED, POINT, POINT OF TANG.
PTN	PARTITION
PVC	POLYVINYL CHLORIDE, POINT OF VERTICAL CURVE
QT	QUARRY TILE
R	RADIUS,REACTION, RISER,RESISTANCE
RA	RETURN AIR
RAF	RESILIENT ATHLETIC FLOORING
RCP	REFLECTED CEILING PLAN
RCPT	RECEPTACLE(S)
RD	ROOF DRAIN
REF	REFERENCE
REINF	REINFORCE(MENT)(ING)
REQD	REQUIRED
REQMT	REQUIREMENT(S)
RESIL	RESILIENT
RET	RETURN
REV	REVERSE ACTING, REVISED, REVISION
RF	RETURN FAN, ROOF
RG	RETURN GRILLE
RM	ROOM
RO	ROUGH OPENING
RU	ROLL UP
S	SOLID, SOUTH, SWITCH
SA	STATUS ALARM, SUPPLY AIR
SCF	STEEL CHANNEL FRAME
SCHED	SCHEDULE
SECT	SECTION
SF	SQUARE FEET (FOOT)
SG	SUPPLY GRILLE
SGFU	STRUCTURAL GLAZED FACING UNITS
SH	SHEET
SIM	SIMILAR
SLP	SLOPE
SNT	SEALANT
SPEC	SPECIFICATION(S)
SPFI	SPRAY POLYURETHANE FOAM INSULATION
SPM	SINGLE PLY MEMBRANE
SQ	SQUARE
SST	STAINLESS STEEL
STC	SOUND TRANSMISSION COEFFICIENT
STD	STANDARD
STL	STEEL
STO	STORAGE
STRUCT	STRUCTURAL
SUSP	SUSPEND(ED)
SYM	SYMMETRICAL
SYS	SYSTEM
TEL	TELEPHONE
T&G	TONGUE AND GROOVE
THK	THICK(NESS)
THR	THRESHOLD
TOJ	TOP OF JOIST
TOS	TOP OF STEEL
TOT	TOTAL
TRD	TREAD
TRTD	TREATED
T'STAT	THERMOSTAT
TYP	TYPICAL
UON	UNLESS OTHERWISE NOTED
UTIL	UTILITY
VCT	VINYL COMPOSITION TILE
VENT	VENTILATE
VERT	VERTICAL
VEST	VESTIBULE
VIF	VERIFY IN FIELD
VNR	VENEER
VTR	VENT THRU ROOF
VWC	VINYL WALL COVERING
W/	WITH
WC	WATER CLOSET, WATER COLUMN
WD	WOOD
WDO	WINDOW
W/O	WITHOUT
WOH	WINDOW OPENING HEIGHT
WOW	WINDOW OPENING WIDTH
WP	WEATHERPROOF, WORKING POINT
WRGWB	WATER RESISTANT GYPSUM WALLBOARD
WWF	WELDED WIRE FABRIC
W	WEST

SYMBOL LEGEND

PRE CAST ARCHITECTURAL CONCRETE "APC"
GYPSUM WALLBOARD
BRICK OR MASONRY VENEER
CONCRETE MASONRY UNITS "CMU"
RIGID INSULATION
BATT INSULATION
COLUMN TAG
ELEVATION MARKER
WALL TYPE TAG
DOOR TAG
GENERAL NOTE TAG
LOUVER TAG
WINDOW TAG
INTERIOR ELEVATION MARKER
ELEVATION NUMBER
ELEVATION SHOWN ON THIS SHEET
FINISH SCHEDULE TAG
SOUTH WALL
CEILING
REMARKS
EAST WALL
WEST WALL
BASE
FLOOR
NORTH WALL
FINISH WOOD
PLYWOOD
CONCRETE
CRUSHED STONE BASE MATERIAL
EARTH
STEEL
ELEV. NO.
ELEVATION REFERENCE SYMBOL
ELEV. SHOWN ON THIS DWG
DETAIL NO.
DETAIL REFERENCE SYMBOL
DETAIL SHOWN ON THIS DWG
SECTION NO.
SECTION REFERENCE SYMBOL
SECTION SHOWN ON THIS DWG
SECTION NO.
SECTION REFERENCE SYMBOL 2
USED ON INT. ELEVS. WITH SEVERAL SECTIONS CUT FOUND ON A COMMON SHEET. SHEET NUMBER NOTED WITH SECTION DETAILS.

SCHEMATIC

ARCHITECTURAL PARTNERS

10 9th Street
Lynchburg, Virginia 24504
p:434-846-8456
f:434-846-4534
www.architecturalpartners.com

INTERIOR FLOOR ADDITION & ALTERATIONS TO
CITY OF LYNCHBURG-IT BLDG.
LYNCHBURG, VIRGINIA

COMMONWEALTH OF VIRGINIA
MARK W. SMITH
Lic. No. 8622
2016-05-23
ARCHITECT

WRITTEN DIMENSIONS ON THESE DRAWINGS SHALL TAKE PRECEDENCE OVER SCALED DIMENSIONS. CONTRACTORS SHALL VERIFY AND BE RESPONSIBLE FOR, ALL DIMENSIONS AND CONDITIONS ON THE JOB AND THIS OFFICE MUST BE NOTIFIED OF ANY VARIATION FROM THE DIMENSIONS AND CONDITIONS SHOWN BY THESE DRAWINGS.

DESIGNED: WDV
DRAWN: WDV
CHECKED: MWS
DATE: 2016-05-23
REVISIONS:

COVER SHEET

CS1.0

©2014 ARCHITECTURAL PARTNERS, P.C.

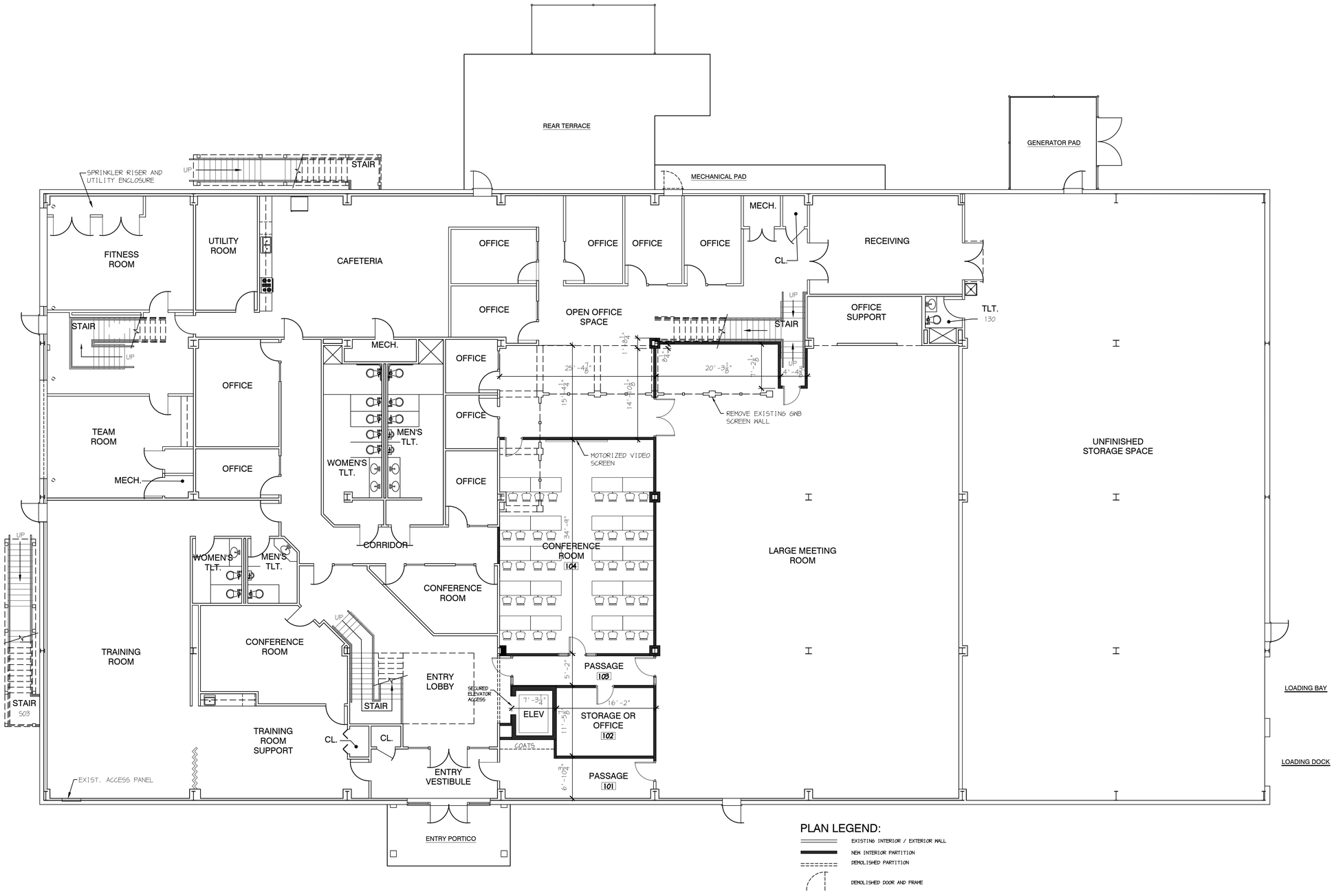

PLAN LEGEND:

- EXISTING INTERIOR / EXTERIOR WALL
- NEW INTERIOR PARTITION
- DEMOLISHED PARTITION
- DEMOLISHED DOOR AND FRAME

1 / A1.1 FIRST FLOOR PLAN
1/8"=1'-0"

ARCHITECTURAL PARTNERS

INTERIOR FLOOR ADDITION & ALTERATIONS TO
CITY OF LYNCHBURG-IT BLDG.
LYNCHBURG, VIRGINIA

COMMONWEALTH OF VIRGINIA
MARK W. SMITH
Lic. No. 8622
2016-05-23
ARCHITECT

WRITTEN DIMENSIONS ON THESE DRAWINGS SHALL TAKE PRECEDENCE OVER SCALED DIMENSIONS. CONTRACTORS SHALL VERIFY AND BE RESPONSIBLE FOR, ALL DIMENSIONS AND CONDITIONS ON THE JOB AND THIS OFFICE MUST BE NOTIFIED OF ANY VARIATION FROM THE DIMENSIONS AND CONDITIONS SHOWN BY THESE DRAWINGS.

DESIGNED: WDV
DRAWN: WDV
CHECKED: MWS
DATE: 2016-05-23
REVISIONS:

FIRST FLOOR PLAN

SCHEMATIC

A1.1

©2014 ARCHITECTURAL PARTNERS, P.C.

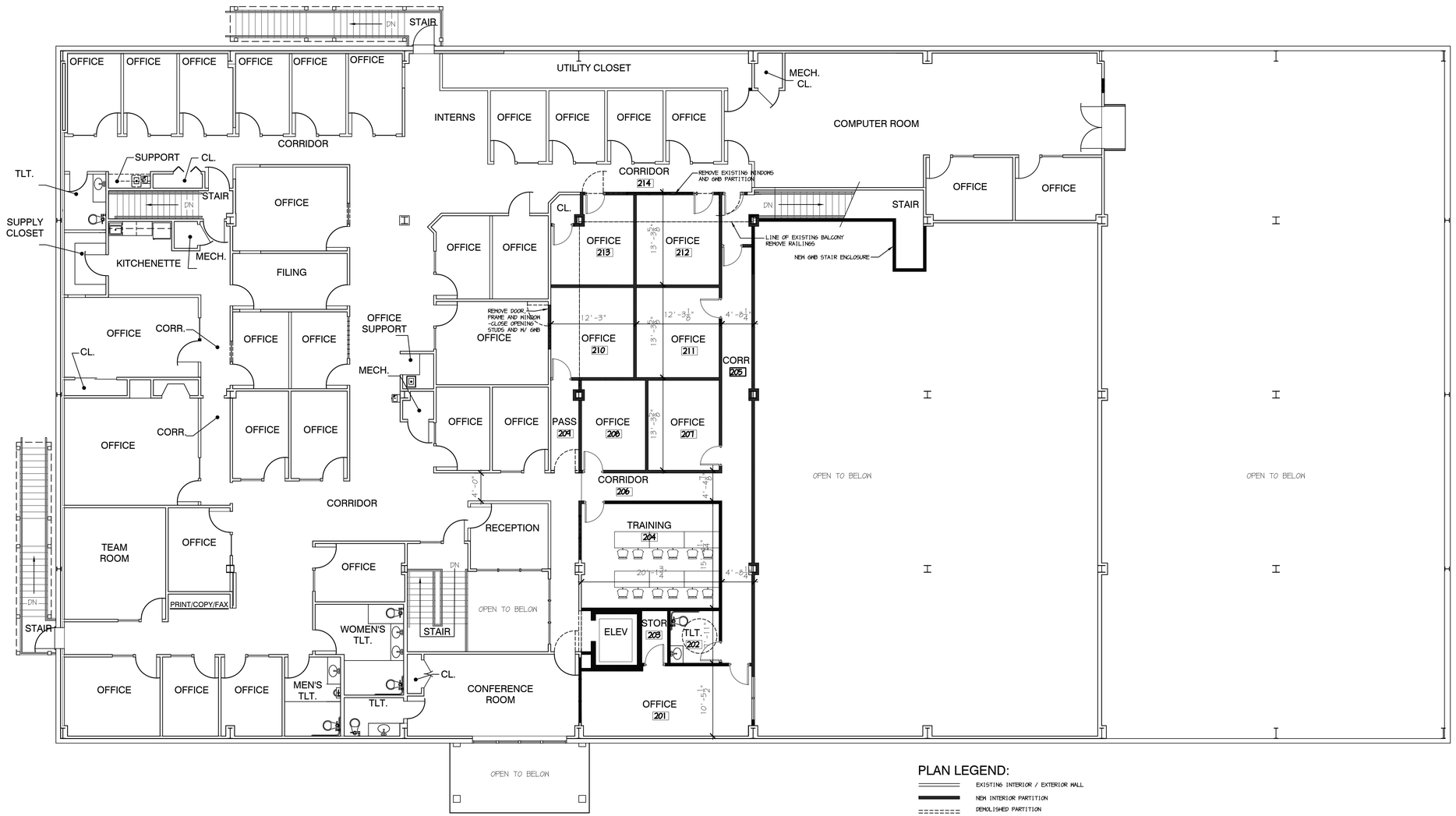

PLAN LEGEND:

- EXISTING INTERIOR / EXTERIOR WALL
- NEW INTERIOR PARTITION
- DEMOLISHED PARTITION
- DEMOLISHED DOOR AND FRAME

1 / A1.2 SECOND FLOOR PLAN
1/8"=1'-0"

ARCHITECTURAL PARTNERS
10 9th Street
Lynchburg, Virginia 24504
p:434-846-8456
f:434-846-4534
www.architecturalpartners.com

INTERIOR FLOOR ADDITION & ALTERATIONS TO CITY OF LYNCHBURG-IT BLDG.

LYNCHBURG, VIRGINIA

COMMONWEALTH OF VIRGINIA
MARK W. SMITH
Lic. No. 8622
2016-05-23
ARCHITECT

WRITTEN DIMENSIONS ON THESE DRAWINGS SHALL TAKE PRECEDENCE OVER SCALED DIMENSIONS. CONTRACTORS SHALL VERIFY AND BE RESPONSIBLE FOR, ALL DIMENSIONS AND CONDITIONS ON THE JOB AND THIS OFFICE MUST BE NOTIFIED OF ANY VARIATION FROM THE DIMENSIONS AND CONDITIONS SHOWN BY THESE DRAWINGS.

DESIGNED: WDV
DRAWN: WDV
CHECKED: MWS
DATE: 2016-05-23
REVISIONS:

SECOND FLOOR PLAN

SCHEMATIC

A1.2

©2014 ARCHITECTURAL PARTNERS, P.C.

City of Lynchburg IT Building - 3550 Young Place
Proposed Mezzanine and Elevator Addition - May 2016

City of Lynchburg has requested a structural design narrative for a second floor and elevator addition to their IT building located at the address listed above.

The existing building is a pre-engineered metal building rigid frame design with “Z” type roof purlins and wall girts. The existing building has a second floor area for about 35 percent of the building footprint. The existing second floor structure is comprised of long span steel joists spaced at 2’-0” center to center with 9/16-inch form deck and concrete for a total slab thickness of 3 1/2-inches. The interior columns are spaced at 25 feet center to center.

The new mezzanine will comprise three of the bays adjacent to the existing second floor. The new elevator will be placed adjacent to the existing lobby and spaced between the exterior column line and the first interior column line. This should allow the elevator pit to be constructed between the existing column footings. This elevator location will not require any modification to the existing second floor framing. Based on the requirements for the elevator shaft distance above the finished second floor, the elevator may penetrate the existing roof structure. This will require modification of the existing roof structure by cutting the existing “Z” roof purlins and re-supporting them at the new elevator shaft. It is possible that a removable hoist beam may be used that would allow the roof structure to remain intact.

The new mezzanine structure will be constructed of steel joists/wide flange beams with metal form deck. Based on the design requirements, one training room will be required on the second floor. Because this is considered an assembly area, the design floor load for this area is 100 PSF. The standard design load for an elevated office floor is 50 PSF, plus 15 PSF partition load and 80 PSF corridor load. We recommend a floor thickness of 4” (steel form deck/concrete) with welded wire fabric reinforcing.

Based on our observations, the existing interior building columns have been pre-punched, but we cannot assume they are designed for the addition of a second floor structure. We have field measured the existing columns and found them to vary in overall size and web/flange measurements. There are no existing building drawings to verify if the existing building was originally designed for the addition of a second floor in this area. Some existing floor slab demolition will be required to verify the existing column footing sizes for placement of new column footings and the new elevator pit.

Since no original building drawings are available, we cannot assume the existing structure (building columns/footings), are capable of carrying the additional load. The structural design options are listed on the next page.

OPTION 1:

If existing building construction drawings are found, they may indicate that the bays in question were originally designed for the addition of a second floor. If so, this will simplify the structural scope of work. A brief structural analysis will prove the viability of the addition based on the building's original design. Verification of the existing footing sizes can be accomplished during the construction process. If the drawings do not confirm that the bays are designed for a second floor, then Option 2 or Option 3 must be used.

OPTION 2:

The existing pre-engineered building components could be analyzed for the new load conditions. This process would involve additional field work to measure all the existing building components. If the existing building columns and existing second floor beams could not support the additional load, they could be reinforced with additional steel plates at the webs and flanges to increase their load capacity. All the affected column footings would have to be excavated to verify their size and reinforcement. If they are undersized, additional concrete and reinforcement would be required. This could be the most expensive option from a design and construction perspective.

OPTION 3:

An independent structure could be placed inside of the existing building structure. This structure would not place any additional load on the existing structure. It would have independent columns and footings with a second floor structure designed for the new load requirements. This may be the most practical and economical option, if no existing structural drawings are recovered and no rigorous structural analysis of the existing building frame is required as noted above.

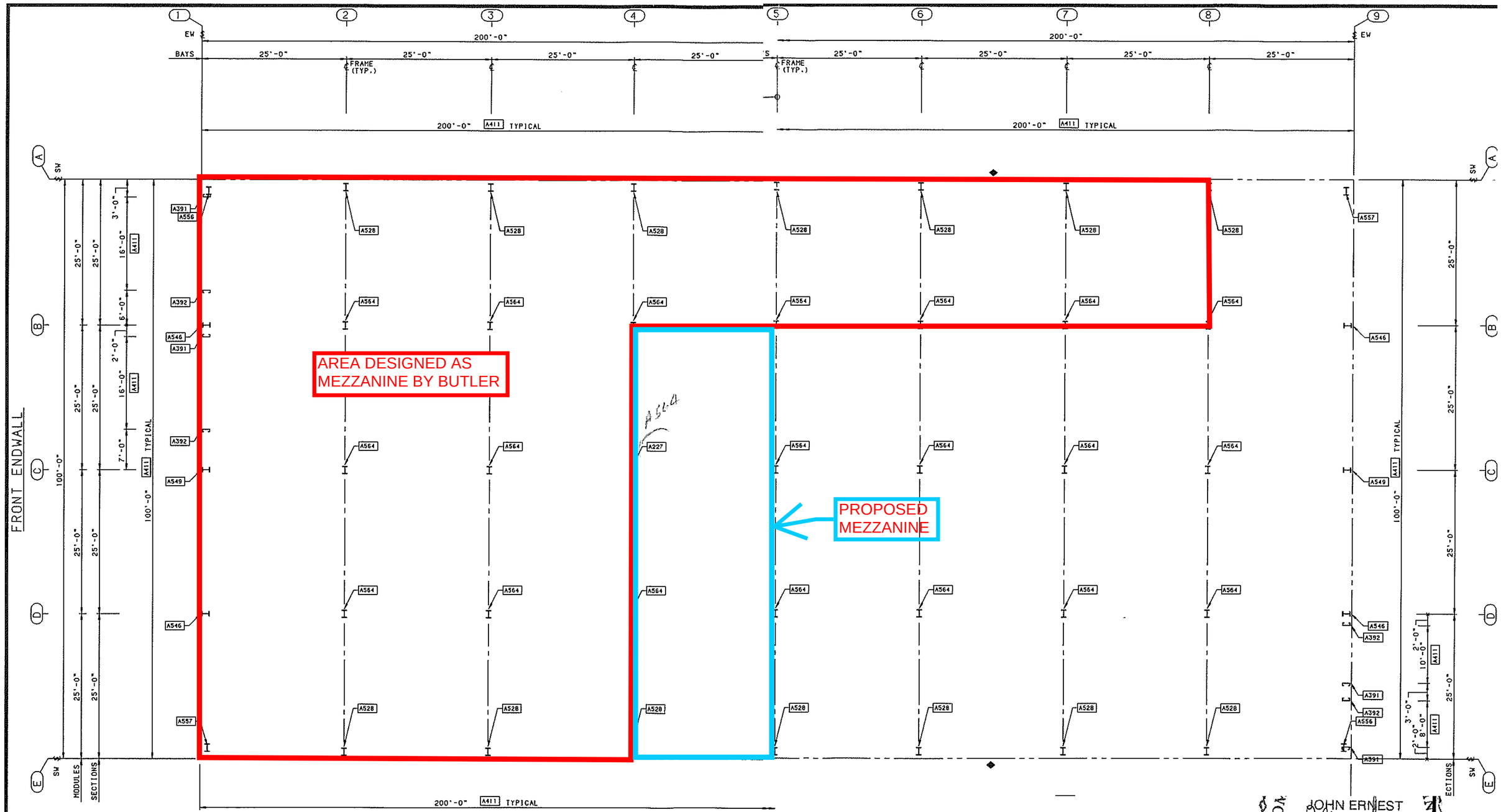

UNIT 1 ANCHOR BOLT PLAN

JOHN ERNEST LAMB
PROFESSIONAL ENGINEER

REVISION NO. 1	REVISION NO. 2							
DATE:	DATE:	BUTLER MANUFACTURING COMPANY GENERAL OFFICES-KANSAS CITY, MISSOURI	PRODUCT OF THE PRONTO® ORDER ENGINEERING SYSTEM	BUILDER: COLEMAN-ADAMS CONSTRUCTION CO. FOREST, VA	PROJECT: N.T.S. MARKETING LYNCHBURG, VA	BUILDING ORDER DESCRIPTION: 100X200X26 MRF 20# Roof SL + 5#CLL 80 MPH EXP B NBC 93	DRAWING TITLE: SPECIFIC ANCHOR BOLT DRAWING	GROUP: L DRAWING NUMBER: D97-087949-01
DRAWN BY:	DRAWN BY:							AG FILE NO: DATE: 01/17/97 REV. 00
CHECKED BY:	CHECKED BY:							

ARCHITECTURAL PARTNERS

INTERIOR FLOOR ADDITION & ALTERATIONS TO CITY OF LYNCHBURG – IT BUILDING

PROJECT # IT018_YP02

MAY 23, 2016

Building Code Review

Building Code:

Existing Building Addition & Alterations:	**2012 Virginia Rehabilitation Code**		
Use and Occupancy Classification:	A-3 Assembly	303.4	
	B Business	304.1	
	S-1 Storage	311.2	
Mixed Occupancy: (w/sprinkler)	A-3/B/S-1 Separated – (1) hour		Table 508.4
Type of Construction:	Type IIB – 000 (non-combustible)		Table 601
Allowable Building Height and Areas:	A-3: 9,500 S.F., 2 stories, 55'		
	B: 23,000 S.F., 3 stories, 55'		
	S-1: 17,500 S.F., 2 stories, 55'		
Building Areas: (First Floor)	A-3: 3,497 S.F. < allowable		
	B: 11,295 S.F. < allowable		
	S-1: 4,608 S.F. < allowable		
Total	19,400 S.F.		
(Second Floor)	B: 11, 295 S.F.< allowable		
Automatic Sprinkler System:	Yes		
Corridor Ratings:	(0) hour		Table 1018.1/716
	Serving 30 or more occupants		
Dead End Corridors:	50' for B Use with sprinkler		Table 1018.4
	20' for A Use, regardless of sprinkler		Table 1018.4
Maximum Exit Access Travel:	300' for B Use with sprinkler		Table 1016.2
	250' for A /S Use with sprinkler		Table 1016.2
Maximum Common Path of Travel:	100' for B/S-1 Use, < 30 occupants		Table 1014.3
	75' for A Use, regardless of sprinkler		Table1014.3
Finishes: Business:	B, C, C w/ sprinkler		Table 803.9
Assembly:	B, B, C w/ sprinkler		Table 803.9
Storage:	C, C, C w/ sprinkler		Table 803.9

Occupant Load: (Existing Layout)	Business: 1St Floor	94
	Assembly: 1st Floor	775
	Storage: 1st Floor	10
	Total Floor	879 occupants
	Business: 2nd Floor	94 occupants
Occupant load:(New Layout)	Business: 1st Floor	114
	Assembly: 1st Floor	500
	Storage: 1st Floor	10
	Total Floor	624 occupants
	Business: 2nd floor	114 occupants

2012 Virginia Rehabilitation Code:

Classification of Work:

Existing First Floor	Alterations level 2	Chapter 7, 8
Existing Second Floor	Alterations level 2	Chapter 7, 8

Note: Alterations are less than 50% of the aggregate floor area.

Chapter 7 - Level 1 Alterations: Includes the removal and replacement or the covering of existing materials, elements, equipment or fixtures using new that serves the same purpose.

Section 702: Interior Finishes: All new wall /ceiling /floor finishes shall comply with IBC chapter 8.
Section 703: Fire Protection: Alterations shall maintain existing level of protection.
Section 704: Egress: Alterations shall maintain existing level of protection.
Section 705: Accessibility: Comply with IBC Chapter 11 where technically feasible.
Section 705.1.13: Maximum threshold height shall be ¾" with bevel to each side.
Section 705.2: Where an alteration affects a primary function an accessible route to a primary function must be provided with accessible toilet and drinking fountain.

Chapter 8 – Level 2 Alternations: Includes the reconfiguration of space, the addition or elimination of any door or window, the reconfiguration or extension of any system, or the installation of any additional equipment. All work shall comply with applicable level 1 requirements.

Section 803.2.1	Exc 4: Group	A = (1/2)hr enclosure to (3) stories
	Exc 5: Group	B = (0) hr enclosure to (3) stories w/ sprinkler
	Exc 13: Group	S = (0) hr enclosure to (3) stories w/ sprinkler

Section 803.2.3: Means of egress stair enclosures in work areas that exceeds 50% of the floor area shall have a smoke tight enclosure.
Section 803.5.2: Existing guards if replaced shall be designed to meet IBC.
Section 804.2.2: Buildings with group A/B occupancy with corridors with a load of more than 30 shall be provided with automatic sprinkler protection where all the following conditions are met:

	(A-3)	(B)
1. The work area require to be sprinkled per IBC for new construction:	NA	No
2. The work area exceeds 50% of the floor area.	NA	No
3. Sprinklers not required.		

Section 805.4.1.1: Any work area rooms or spaces with and occupant load > 50 or travel distance to exit > 75 feet shall have two exits.
Section 805.4.2: Door swings: egress doors serving >50 occupants shall swing in the direction of travel to exit.
Section 805.4.3 exc. (1): door closers are required for all doors opening on exit passageway or exit stair except where not required by IBC.
Section 805.4.4: Panic hardware is required at exit discharge doors of group A occupancies with occupant load >100.
Section 805.5: Openings in corridor walls not required to be rated where sprinkled per IBC.
Section 805.6: Dead-end Corridors: in any work area shall not exceed 35 feet except where greater length is allowed by IBC.
Section 805.7: Means of Egress Lighting: Required in work areas per IBC.
Section 805.8: Exit signs are required in work areas per IBC.
Section805.9&10: If new handrails and guardrails are required then they must meet IBC.
Section 807.2: All new structural elements shall comply with IBC.
Section 808.1: New electrical equipment shall comply with NFPA 70.
Section 809: New and reconfigured mechanical equipment shall comply with IMC and ASHRAE 62.
Section 810.1: Where occupant load of a story is increased by 20% the plumbing fixtures shall be provided in quantities specified by the IPC based upon the increased occupant load.
Section 811.1: Level 2 alterations to existing buildings are permitted without the entire building complying with the IECC or IRC. The energy requirements shall apply to the new construction only.

FINAL DRAWINGS
FILE COPY

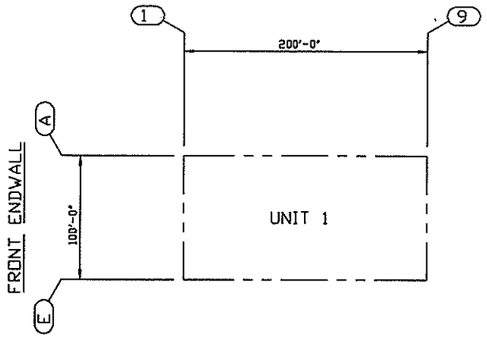

KEY PLAN

SPECIFIC ERECTION DRAWING LIST

THE DRAWINGS LISTED BELOW HAVE BEEN CREATED BY COMPUTER SPECIFICALLY FOR YOUR ORDER TO ASSIST YOU IN PUTTING UP YOUR BUILDING. THESE SPECIFIC ERECTION DRAWINGS ARE THE SAME SIZE AS THIS SHEET AND CAN BE IDENTIFIED INDIVIDUALLY FROM THE TITLES AND DRAWING SEQUENCE NUMBERS THAT APPEAR IN THE LOWER RIGHT HAND CORNER OF EACH DRAWING.

DRAWING TITLE:		AG FILE NO:	
ROOF SECONDARY STRUCTURAL FRAMING PLAN		DATE: 02/16/83	
	DRAWING NUMBER: D 83-123456-05L		REVISION 02

TITLE

THE YEAR DURING WHICH YOUR ORDER WAS ENTERED

THE BUTLER ORDER NUMBER OF YOUR ORDER

DRAWING SEQUENCE NUMBER

REVISION LEVEL OF THE DRAWING. IF THE DRAWING HAS NEVER BEEN REVISED, 00 APPEARS HERE.

D97-087949-00 COVER DRAWING - SHEET 1
D97-087949-01 SPECIFIC ANCHOR BOLT DRAWING - SHEET 1
D97-087949-01A SPECIFIC ANCHOR BOLT DRAWING - SHEET 2
D97-087949-01B SPECIFIC REACTION DRAWING - SHEET 3
D97-087949-01C ANCHOR BOLT DETAIL SHEET - SHEET 4
D97-087949-02 CROSS SECTION ERECTION DRAWING - SHEET 1
D97-087949-02A CROSS SECTION ERECTION DRAWING - SHEET 2
D97-087949-02B CROSS SECTION ERECTION DRAWING - SHEET 3
D97-087949-02C CROSS SECTION ERECTION DRAWING - SHEET 4
D97-087949-02D CROSS SECTION ERECTION DRAWING - SHEET 5
D97-087949-02E CROSS SECTION ERECTION DRAWING DETAIL SHEET - SHEET 6
D97-087949-03 WIND BRACING DRAWING - SHEET 1
D97-087949-03A WIND BRACING DETAIL SHEET - SHEET 2
D97-087949-04 ROOF SECONDARY STRUCTURAL FRAMING PLAN - SHEET 1
D97-087949-04A ROOF SECONDARY STRUCTURAL FRAMING PLAN - SHEET 2
D97-087949-04B ROOF SECONDARY STRUCTURAL DETAIL SHEET - SHEET 3
D97-087949-05 WALL SECONDARY STRUCTURAL ELEVATION - SHEET 1
D97-087949-05A WALL SECONDARY STRUCTURAL ELEVATION - SHEET 2
D97-087949-05B WALL SECONDARY STRUCTURAL ELEVATION - SHEET 3
D97-087949-05C DOOR DETAIL DRAWING - SHEET 4
D97-087949-05D DOOR DETAIL DRAWING - SHEET 5
D97-087949-05E WALL SECONDARY STRUCTURAL ELEVATION DETAIL SHEET - SHEET 6
D97-087949-05F WALL SECONDARY STRUCTURAL ELEVATION DETAIL SHEET - SHEET 7
D97-087949-06 WALL PANEL DRAWING - SHEET 1
D97-087949-06A WALL PANEL DRAWING - SHEET 2
D97-087949-06B WALL PANEL DRAWING - SHEET 3
D97-087949-07 ROOF PANEL DRAWING - SHEET 1
D97-087949-07A ROOF PANEL DRAWING - SHEET 2

SUPPLEMENTING THE SPECIFIC ERECTION DRAWINGS LISTED ARE SEVERAL GENERAL ERECTION DRAWINGS CALLED "PLANDGRAPHS". SEE THE DRAWING MANIFEST FOR A COMPLETE LIST OF THESE DRAWINGS.

FIELD WORK SUMMARY

WALL SECONDARY

FW0008 FIELD LOCATE HOLES IN DOUBLE "C" HEADER FOR DOOR POST CONNECTION.

FW0010 FIELD LOCATE HOLES IN COLUMN OR POST FOR DOUBLE "C" HEADER CONNECTION IF REQUIRED.

FW0040 FIELD CUT AND LOCATE HOLES IN DOOR POST.

FW0042 FIELD CUT AND LOCATE HOLES IN DOOR HEADER.

FW0043 FIELD CUT AND LOCATE HOLES IN DOUBLE "C" HEADER.

FW0056 FIELD WORK GIRT CHANNEL AT INTERMEDIATE SIDEWALL COLUMN WITH ADJACENT DOOR POST(S).

FW0072 FIELD WORK GIRT CHANNEL AT DOOR POST.

COVER DRAWING NOTES

STANDARD NOTES:

CD0001 ATTACH PATENT PLATE 007849 TO THE WEB OF AN INTERMEDIATE FRAME COLUMN AT EYE LEVEL.

CD0002 PARTS SHOWN MAY BE UPGRADED DUE TO STANDARDIZED FABRICATION. REFER TO THE SHIPPING MANIFEST FOR POSSIBLE SUBSTITUTIONS.

CD0011 HIGH STRENGTH BOLTING:

ALL HIGH STRENGTH BOLTS ARE A-325-T WITH HEAVY HEX NUTS AND ARE TO BE INSTALLED USING THE "TURN-OF-THE-NUT" METHOD SPECIFIED IN THE NINTH EDITION OF THE AISC "SPECIFICATION FOR STRUCTURAL JOINTS USING ASTM A325 OR A490 BOLTS" PER SECTION 8 D (1). A-325 BOLTS MAY BE INSTALLED WITHOUT WASHERS WHEN TIGHTENED BY THE "TURN-OF-THE-NUT" METHOD. IT IS THE RESPONSIBILITY OF THE ERECTOR TO ASSURE PROPER TIGHTNESS. SEE INSTALLATION OF A-325T BOLT DRAWING D-1080268 (GROUP 52-30).

CD0013 IF THESE DRAWINGS ARE SEALED, THE SEAL APPLIES ONLY TO THE MATERIALS SUPPLIED BY BUTLER MFG. CO. AND IS NOT INTENDED AS THE SEAL OF THE ENGINEER OF RECORD FOR THE ENTIRE PROJECT.

CD0017

MATERIALS	ASTM DESIGNATION	
STRUCT PLATE 1" & LESS	A-529	FY= 55KSI (GRADE 55)
STRUCT PLATE OVER 1"	A-529	FY= 50KSI (GRADE 50)
LIGHT GAGE/COLD FORMED	A-570	FY= 55KSI (GRADE 55)
BRACE RODS 3/4" & LESS	A-108	GRADE 1018
BRACE RODS OVER 3/4"	A-572	GRADE 50 OR GREATER
HOT ROLLED MILL SHAPES	A-36; A-572	FY= 36KSI; FY=50KSI
ROOF AND WALL PANELS	A-446	GRADE 45 OR GREATER
BOLTS	A-307 AND A-325	

THIS PROJECT HAS BEEN DESIGNED AND DETAILED BY THE SOUTHEAST REGION

FOR DETAILING AND MANIFEST QUESTIONS
CONTACT: BETTY E. ALLEN AT:(910)277-1137

FOR DETAILING AND MANIFEST QUESTIONS
CONTACT: MARCELO SANCHEZ AT:(910)277-1170

FOR ANY DESIGN QUESTIONS
CONTACT: MICHELE A. BOGDON AT:(910)277-1135

BUILDING CODE NBC EDITION 1993
ROOF LIVE LOAD - FRAMES 12 PSF
- PURLINS 20 PSF
ROOF SNOW LOAD - FRAMES 20 PSF IMPORTANCE FACTOR 1.0
- PURLINS 20 PSF
COLLATERAL LOAD 5 PSF
WIND LOAD 80 MPH EXPOSURE FACTOR B IMPORTANCE FACTOR 1.0
BUILDING USE CATEGORY I: NORMAL USE
PEAK VELOCITY ACCEL. "Av" = 0.05g
PEAK ACCELERATION "Aa" = 0.05g
SEISMIC HAZARD EXPOSURE GROUP I
SEISMIC PERFORMANCE CATEGORY B
SOIL PROFILE TYPE S4

LONGITUDINALLY:
BASIC STRUCTURAL SYSTEM BUILDING FRAME SYSTEM
SEISMIC RESISTING SYSTEM CONCENTRICALLY BRACED FRAMES
DEFLECTION AMPLIFICATION FACTOR - Cd= 4.5 FOR RODS
RESPONSE MODIFICATION FACTOR - R= 5 FOR RODS
(NOTE: FOR LONGITUDINAL RESISTANCE FROM PORTAL FRAMES OR WINDPOSTS SEE BELOW)

LATERALLY:
BASIC STRUCTURAL SYSTEM MOMENT-RESISTING FRAME SYSTEM
SEISMIC RESISTING SYSTEM ORDINARY MOMENT FRAMES OF STEEL
DEFLECTION AMPLIFICATION FACTOR - Cd= 4
RESPONSE MODIFICATION FACTOR - R= 4.5

COMMONWEALTH OF VIRGINIA
JOHN ERNEST LAMB
018906
1/30/97
PROFESSIONAL ENGINEER

FINAL DRAWINGS
FILE COPY

REVISION NO. 1	REVISION NO. 2							
DATE:	DATE:	BUTLER MANUFACTURING COMPANY GENERAL OFFICES-KANSAS CITY, MISSOURI	PRODUCT OF THE PRONTO® ORDER ENGINEERING SYSTEM	BUILDER: COLEMAN-ADAMS CONSTRUCTION CO. FOREST, VA	PROJECT: N.T.S. MARKETING LYNCHBURG, VA	BUILDING ORDER DESCRIPTION: 100X200X26 MRF 20# Roof SL + 5#CLL 80 MPH EXP B NBC 93	DRAWING TITLE: COVER DRAWING	BUTLER GROUP: L / AG FILE NO: / DATE: 01/24/97 / DRAWING NUMBER: D97-087949-00 / REV. 00
DRAWN BY:	DRAWN BY:							
CHECKED BY:	CHECKED BY:							

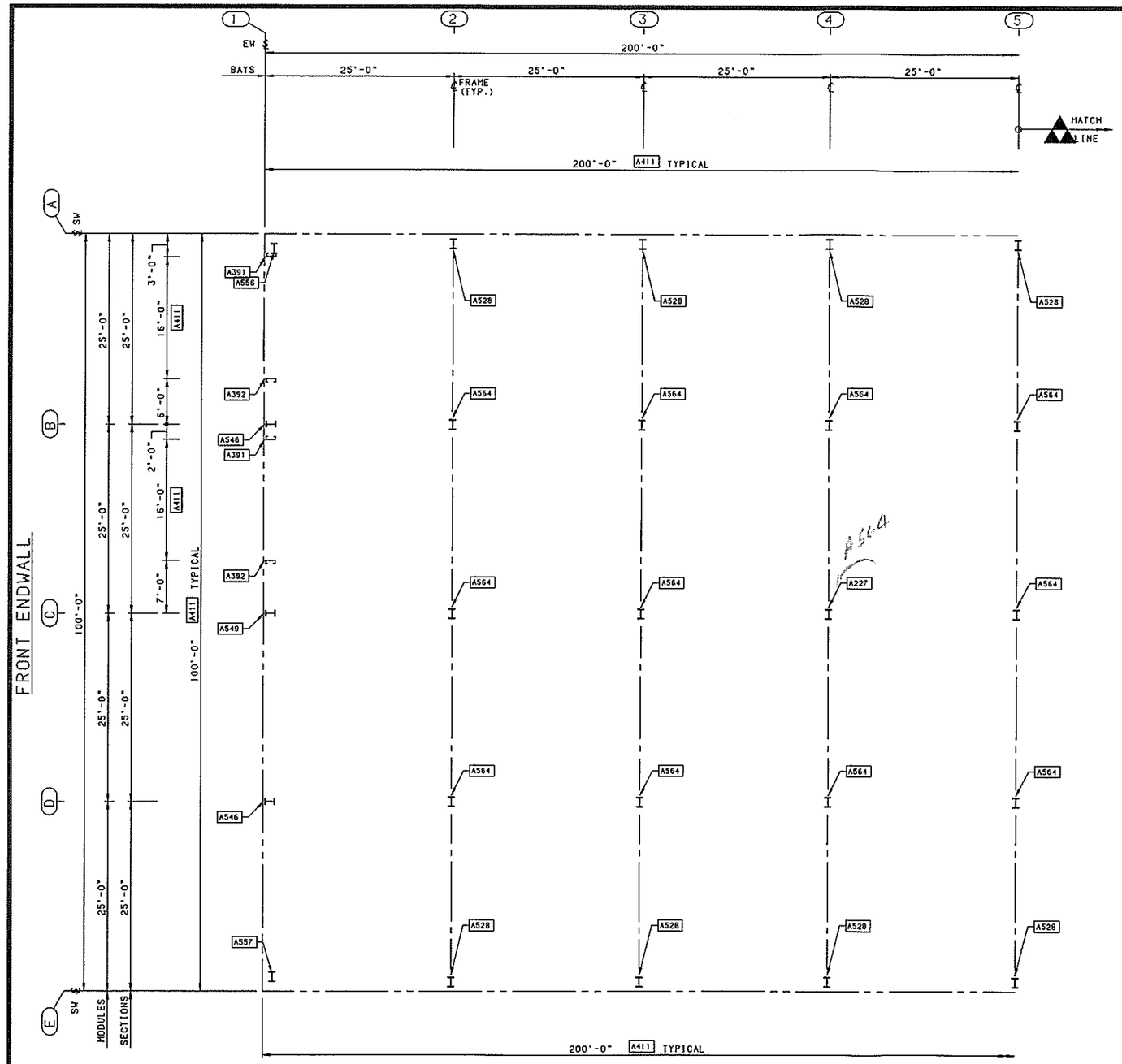

STANDARD NOTES:

AB0007 GIVE TOP OF FOUNDATION A TROWEL FINISH. THE FOUNDATION MUST BE SQUARE, LEVEL, AND SMOOTH.

AB0009 ANCHOR BOLTS MUST BE LOCATED BY MEANS OF A TEMPLATE. DO NOT HAND SET ANCHOR BOLTS.

AB0010 ANCHOR BOLTS, NUTS AND WASHERS MUST BE ASTM TYPE A307.

AB0013 USE REINFORCING STEEL AS REQUIRED, PROVIDE FOR HORIZONTAL LOAD ON ANCHOR BOLTS.

AB0014 C A U T I O N
****
RIGID FRAMES HAVE BOTH HORIZONTAL AND VERTICAL REACTIONS ACTING AT THE BASE OF THE COLUMN. IN SOME CASES THE HORIZONTAL FORCE IS GREATER THAN THE VERTICAL. A FOUNDATION DESIGNED FOR A CONVENTIONAL STRUCTURE WILL NOT BE SATISFACTORY. FAILURE TO MAKE ADEQUATE PROVISION FOR THE HORIZONTAL THRUST CAN RESULT IN FOUNDATION FAILURE.

AB0015 FOUNDATION DESIGN AND ANCHOR BOLTS, NUTS AND WASHERS ARE NOT FURNISHED BY BUTLER. PROPER EMBEDMENT LENGTH MUST BE DESIGNED BY FOUNDATION DESIGN ENGINEER.

AB0016 REFER TO DRAWING C-104161 FOR BUTLERIB OR SHADOWRIB WALL BASE ANGLE INSTALLATION.

AB0017 THE SOLID BLACK <> SYMBOL DESIGNATES A BRACED BAY OR SECTION.

COMMONWEALTH OF VIRGINIA
JOHN ERNEST LAMB
011906
1/30/97
PROFESSIONAL ENGINEER

UNIT 1 ANCHOR BOLT PLAN

REVISION NO. 1	REVISION NO. 2							
DATE:	DATE:	BUTLER MANUFACTURING COMPANY GENERAL OFFICES-KANSAS CITY, MISSOURI	PRODUCT OF THE PRONTO® ORDER ENGINEERING SYSTEM	BUILDER: COLEMAN-ADAMS CONSTRUCTION CO. FOREST, VA	PROJECT: N.T.S. MARKETING LYNCHBURG, VA	BUILDING ORDER DESCRIPTION: 100X200X26 MRF 20# Roof SL + 5#CLL 80 MPH EXP B NBC 93	DRAWING TITLE: SPECIFIC ANCHOR BOLT DRAWING	MNS GROUP: L / AG FILE NO: DATE: 01/17/97
DRAWN BY:	DRAWN BY:							DRAWING NUMBER: D97-087949-01 / REV. 00
CHECKED BY:	CHECKED BY:							

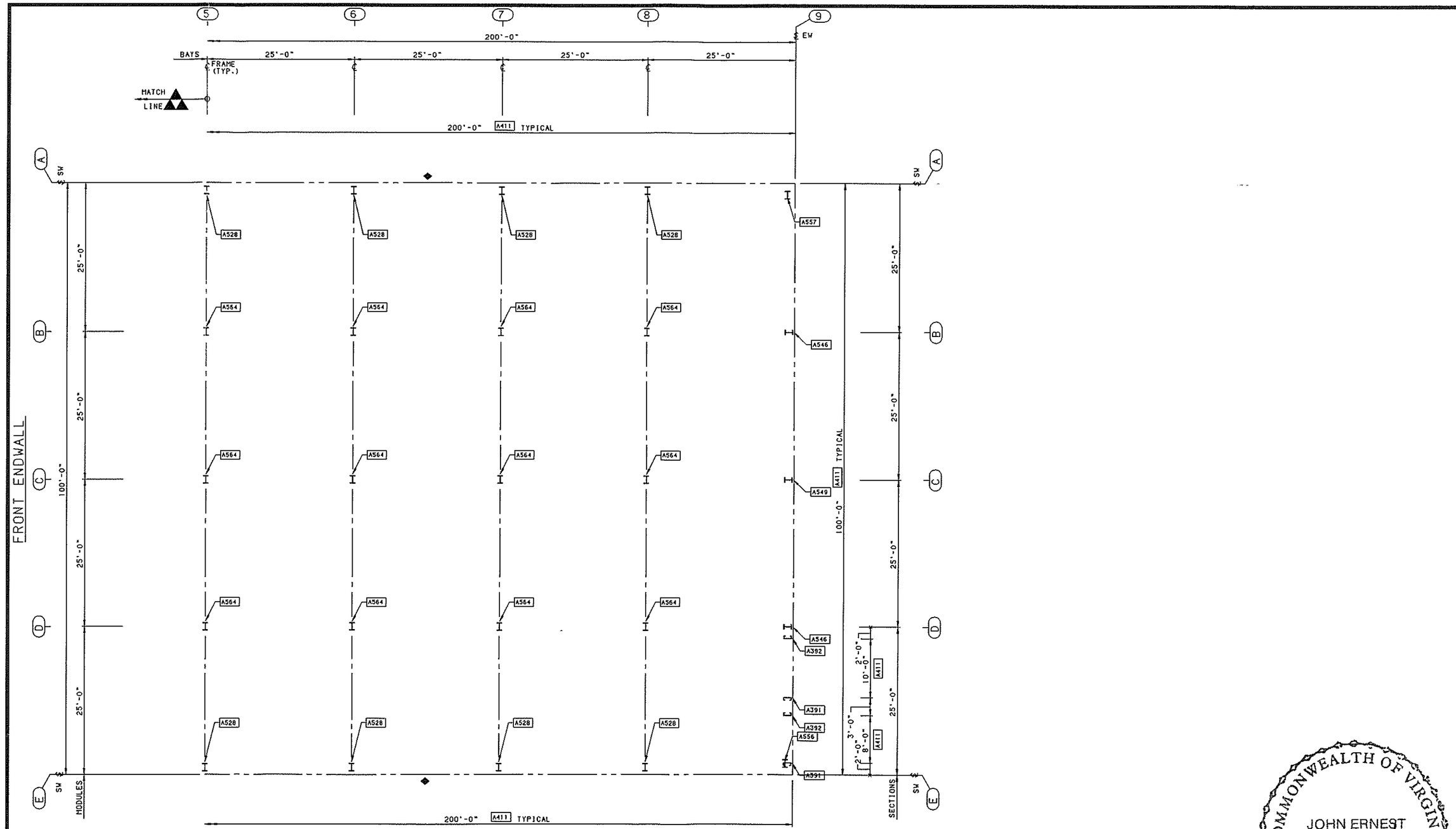

UNIT 1 ANCHOR BOLT PLAN

COMMONWEALTH OF VIRGINIA
JOHN ERNEST LAMB
018906
1/30/97
PROFESSIONAL ENGINEER

REVISION NO. 1	REVISION NO. 2						
DATE:	DATE:	BUTLER MANUFACTURING COMPANY GENERAL OFFICES-KANSAS CITY, MISSOURI	PRODUCT OF THE PRONTO® ORDER ENGINEERING SYSTEM	BUILDER: COLEMAN-ADAMS CONSTRUCTION CO. FOREST, VA	PROJECT: N.T.S. MARKETING LYNCHBURG, VA	BUILDING ORDER DESCRIPTION: 100X200X26 MRF 20# Roof SL + 5#CLL 80 MPH EXP B NBC 93	DRAWING TITLE: SPECIFIC ANCHOR BOLT DRAWING
DRAWN BY:	DRAWN BY:						
CHECKED BY:	CHECKED BY:						

GROUP: L	AG FILE NO:
DRAWING NUMBER: D97-087949-01A	DATE: 01/17/97
	REV. 00

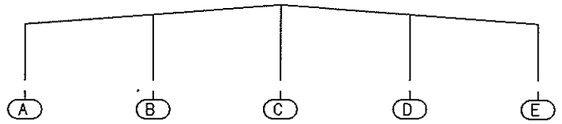

UNIT 1 - ENDWALL FRAME AT SIDEWALL GRID 1

		A		B		C		D		E	
		H	V	V	Z	V	Z	V	Z	H	V
DL	DEAD LOAD	0.07	1.12	1.65	0.00	1.68	0.00	1.65	0.00	-0.07	1.12
CLL	COLLATERAL LOAD	0.10	0.82	1.57	0.00	1.62	0.00	1.57	0.00	-0.10	0.82
SL	SNOW LOAD	0.39	3.27	6.24	0.00	6.47	0.00	6.24	0.00	-0.39	3.27
WLL	WIND LOAD LEFT	-2.93	-3.04	-0.87	0.00	-2.75	0.00	-4.53	0.00	-2.09	0.35
WLR	WIND LOAD RIGHT	2.09	0.35	-4.53	0.00	-2.75	0.00	-0.87	0.00	2.93	-3.04
IP	WIND INT PRESSURE	0.23	-0.36	-0.55	-0.61	-0.60	-0.63	-0.55	-0.61	-0.23	-0.36
IS	WIND INT SUCTION	-0.23	0.36	0.55	0.61	0.60	0.63	0.55	0.61	0.23	0.36
EQ	SEISMIC LOAD	-0.17	-0.22	0.26	0.00	0.00	0.00	-0.26	0.00	-0.17	0.22
SLL	MIN SNOW LOAD LEFT	0.17	2.57	6.09	0.00	2.83	0.00	-0.63	0.00	-0.17	0.29
SLR	MIN SNOW LOAD RIGHT	0.17	0.29	-0.63	0.00	2.83	0.00	6.09	0.00	-0.17	2.57
EWP	EW WIND PRESSURE	1.01	-1.56	-2.39	3.01	-2.61	3.12	-2.39	3.01	-1.01	-1.56
EWS	EW WIND SUCTION	1.01	-1.56	-2.39	-2.62	-2.61	-2.72	-2.39	-2.62	-1.01	-1.56
WL1	WLL ASCE 7	-2.98	-1.94	3.46	0.00	-0.35	0.00	-5.16	0.00	-2.29	0.66
WR1	WLR ASCE 7	2.30	0.66	-5.05	0.00	-1.25	0.00	2.57	0.00	2.96	-1.83
MDL	MEZZANINE DL	0.26	8.22	15.93	0.00	15.94	0.00	15.93	0.00	-0.26	8.22
MLL	MEZZANINE LL	0.52	16.45	31.87	0.00	31.87	0.00	31.87	0.00	-0.52	16.45
MCL	MEZZANINE CL	0.03	0.82	1.60	0.00	1.60	0.00	1.60	0.00	-0.03	0.82
	MAX. POS. REACTION	3.77	31.21	60.87	3.62	59.29	3.75	60.42	3.62	2.34	31.21
	MAX. NEG. REACTION	-2.36	0.00	0.00	-3.24	0.00	-3.35	0.00	-3.24	-3.75	0.00

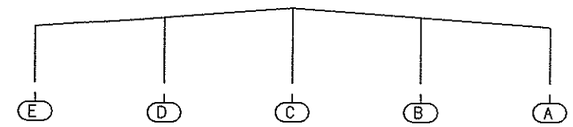

UNIT 1 - ENDWALL FRAME AT SIDEWALL GRID 9

		E		D		C		B		A	
		H	V	V	Z	V	Z	V	Z	H	V
DL	DEAD LOAD	0.06	0.84	1.35	0.00	1.45	0.00	1.35	0.00	-0.06	0.84
CLL	COLLATERAL LOAD	0.08	0.80	1.59	0.00	1.61	0.00	1.59	0.00	-0.08	0.80
SL	SNOW LOAD	0.32	3.18	6.35	0.00	6.43	0.00	6.35	0.00	-0.32	3.18
WLL	WIND LOAD LEFT	-2.89	-2.99	-0.93	0.00	-2.73	0.00	-4.58	0.00	-2.13	0.39
WLR	WIND LOAD RIGHT	2.13	0.39	-4.59	0.00	-2.73	0.00	-0.93	0.00	2.89	-2.99
IP	WIND INT PRESSURE	0.23	-0.36	-0.54	-0.61	-0.60	-0.63	-0.54	-0.61	-0.23	-0.36
IS	WIND INT SUCTION	-0.23	0.36	0.54	0.61	0.60	0.63	0.54	0.61	0.23	0.36
EQ	SEISMIC LOAD	-0.17	-0.22	0.26	0.00	0.00	0.00	-0.26	0.00	-0.17	0.22
SLL	MIN SNOW LOAD LEFT	0.14	2.53	6.14	0.00	2.81	0.00	-0.58	0.00	-0.14	0.25
SLR	MIN SNOW LOAD RIGHT	0.14	0.25	-0.58	0.00	2.81	0.00	6.14	0.00	-0.14	2.53
EWP	EW WIND PRESSURE	1.00	-1.57	-2.37	3.01	-2.62	3.12	-2.37	3.01	-1.00	-1.57
EWS	EW WIND SUCTION	1.00	-1.57	-2.37	-2.62	-2.62	-2.72	-2.37	-2.62	-1.00	-1.57
WL1	WLL ASCE 7	-2.94	-1.80	2.53	0.00	-1.24	0.00	-5.08	0.00	-2.33	0.69
WR1	WLR ASCE 7	2.33	0.69	-5.08	0.00	-1.24	0.00	2.53	0.00	2.94	-1.80
	MAX. POS. REACTION	2.91	5.35	10.83	3.62	9.49	3.75	10.83	3.62	3.11	5.35
	MAX. NEG. REACTION	-3.11	-2.51	-4.27	-3.24	-1.89	-3.35	-4.27	-3.24	-2.91	-2.51

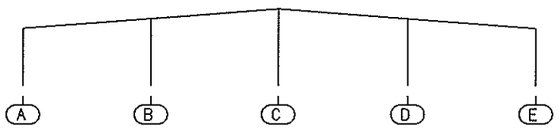

UNIT 1 - FRAME AT SIDEWALL GRIDS 2 & 3

		A		B	C	D	E	
		H	V	V	V	V	H	V
DL	DEAD LOAD	0.17	1.63	2.55	2.78	2.55	-0.17	1.63
CLL	COLLATERAL LOAD	0.24	1.64	2.98	3.26	2.98	-0.24	1.64
SL	SNOW LOAD	0.95	6.56	11.93	13.02	11.93	-0.95	6.56
WLL	WIND LOAD LEFT	-5.81	-5.90	-1.84	-5.56	-8.54	-4.03	0.49
WLR	WIND LOAD RIGHT	4.03	0.49	-8.54	-5.56	-1.84	5.81	-5.90
IP	WIND INT PRESSURE	0.43	-0.74	-1.05	-1.23	-1.05	-0.43	-0.74
IS	WIND INT SUCTION	-0.43	0.74	1.05	1.23	1.05	0.43	0.74
EQ	SEISMIC LOAD	-0.36	-0.44	0.50	0.00	-0.50	-0.36	0.44
SLL	MIN SNOW LOAD LEFT	0.42	5.09	11.85	5.70	-1.39	-0.42	0.66
SLR	MIN SNOW LOAD RIGHT	0.42	0.66	-1.40	5.71	11.84	-0.42	5.09
EWP	EW WIND PRESSURE	1.63	-3.55	-4.49	-4.52	-4.49	-1.63	-3.55
EWS	EW WIND SUCTION	2.07	-2.76	-4.52	-6.05	-4.52	-2.07	-2.76
WL1	WLL ASCE 7	-5.84	-3.47	4.86	-2.51	-9.63	-4.50	1.15
WR1	WLR ASCE 7	4.50	1.15	-9.63	-2.51	4.86	5.84	-3.47
MDL	MEZZANINE DL	1.03	16.12	31.22	31.20	31.22	-1.03	16.12
MLL	MEZZANINE LL	2.06	32.25	62.51	62.48	62.51	-2.06	32.25
MCL	MEZZANINE CL	0.10	1.62	3.14	3.13	3.14	-0.10	1.62
	MAX. POS. REACTION	9.16	60.76	117.28	115.87	117.28	3.00	60.76
	MAX. NEG. REACTION	-3.00	0.00	0.00	0.00	0.00	-9.16	0.00

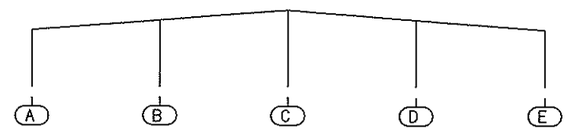

UNIT 1 - FRAME AT SIDEWALL GRID 4

		A		B	C	D	E	
		H	V	V	V	V	H	V
DL	DEAD LOAD	0.17	1.63	2.55	2.60	2.55	-0.17	1.63
CLL	COLLATERAL LOAD	0.24	1.64	2.98	3.25	2.98	-0.24	1.64
SL	SNOW LOAD	0.95	6.56	11.94	13.01	11.94	-0.95	6.56
WLL	WIND LOAD LEFT	-5.81	-5.89	-1.85	-5.56	-8.55	-4.03	0.49
WLR	WIND LOAD RIGHT	4.03	0.49	-8.54	-5.56	-1.84	5.81	-5.89
IP	WIND INT PRESSURE	0.43	-0.73	-1.05	-1.23	-1.05	-0.43	-0.73
IS	WIND INT SUCTION	-0.43	0.73	1.05	1.23	1.05	0.43	0.73
EQ	SEISMIC LOAD	-0.36	-0.44	0.50	0.00	-0.50	-0.36	0.44
SLL	MIN SNOW LOAD LEFT	0.41	5.09	11.85	5.69	-1.39	-0.41	0.66
SLR	MIN SNOW LOAD RIGHT	0.41	0.66	-1.39	5.70	11.85	-0.41	5.09
EWP	EW WIND PRESSURE	1.63	-3.55	-4.50	-4.51	-4.50	-1.63	-3.55
EWS	EW WIND SUCTION	2.07	-2.76	-4.52	-6.04	-4.52	-2.07	-2.76
WL1	WLL ASCE 7	-5.84	-3.47	4.86	-2.51	-9.63	-4.50	1.15
WR1	WLR ASCE 7	4.50	1.15	-9.63	-2.51	4.86	5.84	-3.47
MDL	MEZZANINE DL	0.70	15.90	31.46	15.61	15.36	-0.70	8.29
MLL	MEZZANINE LL	1.88	32.42	62.23	31.15	31.37	-1.88	31.27
MCL	MEZZANINE CL	0.07	1.60	3.14	3.14	3.11	-0.07	0.84
	MAX. POS. REACTION	8.61	60.69	117.26	68.75	70.27	3.52	51.17
	MAX. NEG. REACTION	-3.52	0.00	0.00	0.00	0.00	-8.61	0.00

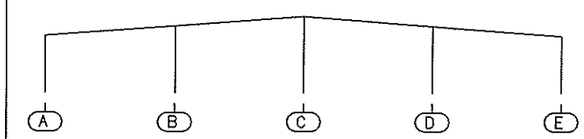

UNIT 1 - FRAME AT SIDEWALL GRIDS 5, 6, 7 & 8

		A		B	C	D	E	
		H	V	V	V	V	H	V
DL	DEAD LOAD	0.18	1.73	2.51	2.78	2.51	-0.18	1.73
CLL	COLLATERAL LOAD	0.25	1.66	2.96	3.26	2.96	-0.25	1.66
SL	SNOW LOAD	1.00	6.62	11.85	13.05	11.85	-1.00	6.62
WLL	WIND LOAD LEFT	-5.84	-5.93	-1.80	-5.58	-8.49	-4.00	0.45
WLR	WIND LOAD RIGHT	4.00	0.45	-8.49	-5.58	-1.80	5.84	-5.93
IP	WIND INT PRESSURE	0.43	-0.73	-1.05	-1.23	-1.05	-0.43	-0.73
IS	WIND INT SUCTION	-0.43	0.73	1.05	1.23	1.05	0.43	0.73
EQ	SEISMIC LOAD	-0.36	-0.44	0.50	0.00	-0.50	-0.36	0.44
SLL	MIN SNOW LOAD LEFT	0.44	5.12	11.81	5.71	-1.43	-0.44	0.69
SLR	MIN SNOW LOAD RIGHT	0.44	0.69	-1.43	5.72	11.81	-0.44	5.12
EWP	EW WIND PRESSURE	1.63	-3.55	-4.49	-4.52	-4.49	-1.63	-3.55
EWS	EW WIND SUCTION	2.10	-2.73	-4.56	-6.03	-4.56	-2.10	-2.73
WL1	WLL ASCE 7	-5.85	-3.49	4.88	-2.52	-9.60	-4.48	1.13
WR1	WLR ASCE 7	4.48	1.12	-9.60	-2.52	4.88	5.85	-3.49
MDL	MEZZANINE DL	0.21	15.84	15.87	0.00	-0.30	-0.21	0.27
MLL	MEZZANINE LL	0.43	31.69	31.77	0.01	-0.60	-0.43	0.53
MCL	MEZZANINE CL	0.02	1.59	1.59	0.00	-0.03	-0.02	0.03
	MAX. POS. REACTION	6.67	60.05	69.53	19.11	19.36	5.46	11.76
	MAX. NEG. REACTION	-5.46	0.00	0.00	-4.47	-9.05	-6.67	-4.14

BRACED BAY REACTION - UNIT 1

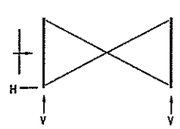

SIDEWALL GRID	BETWEEN GRIDS	H	V
A	6- 7	11	10
E	6- 7	11	10

REACTION NOTES:

1. THE VERTICAL (V) AND HORIZONTAL (H AND Z) REACTION ARE STATED IN KIPS. (1 KIP = 1000 POUNDS) POSITIVE DIRECTION IS AS SHOWN IN THE FOLLOWING DIAGRAM.
2. MOMENT REACTIONS ARE STATED IN INCH-KIPS AND ARE POSITIVE IN A CLOCKWISE DIRECTION.
3. THE FORCE ON THE ANCHOR BOLTS OR FOUNDATION WILL BE IN THE OPPOSITE DIRECTION TO THAT SHOWN.
4. MAXIMUM REACTION SUMMARY IS THE MAXIMUM POSITIVE AND NEGATIVE REACTIONS BASED ON THE REQUIRED LOAD COMBINATIONS.

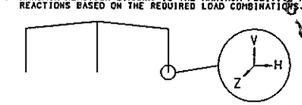

COMMONWEALTH OF VIRGINIA
JOHN ERNEST LAMBERT
013906
01/20/97
PROFESSIONAL ENGINEER

REVISION NO. 1		REVISION NO. 2	
DATE:		DATE:	
DRAWN BY:		DRAWN BY:	
CHECKED BY:		CHECKED BY:	

BUTLER MANUFACTURING COMPANY
GENERAL OFFICES-KANSAS CITY, MISSOURI

PRODUCT OF THE PRONTO® ORDER ENGINEERING SYSTEM

BUILDER: COLEMAN-ADAMS CONSTRUCTION CO. FOREST, VA

PROJECT: N.T.S. MARKETING LYNCHBURG, VA

BUILDING ORDER DESCRIPTION: 100X200X26 MRF 20# Roof SL + 5#CLL 80 MPH EXP B NBC 93

DRAWING TITLE: SPECIFIC REACTION DRAWING

MAB

AG FILE NO:

GROUP: L

DATE: 01/17/97

DRAWING NUMBER: D97-087949-01B

REV. 00

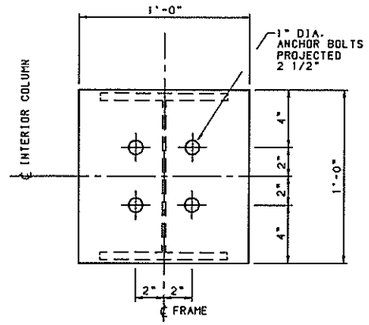

DETAIL A227 | INTERIOR COLUMN

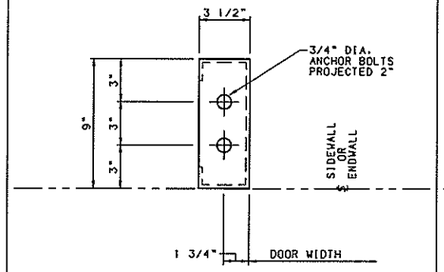

DETAIL A391 | 9" DOOR POST (LEFT)

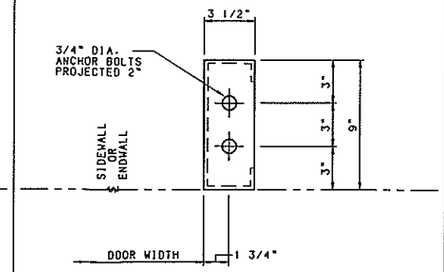

DETAIL A392 | 9" DOOR POST (RIGHT)

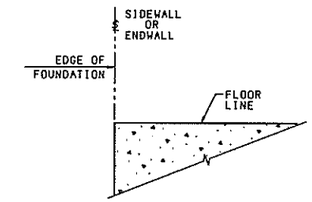

SECTION A411 | TYP. SECTION AT EDGE OF FOUNDATION UN-NOTCHED BASE

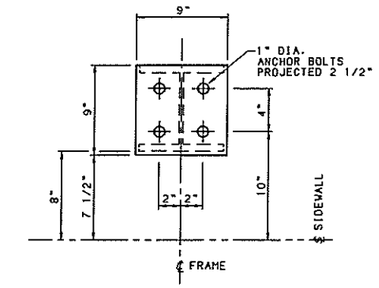

DETAIL A528 | SIDEWALL COLUMN

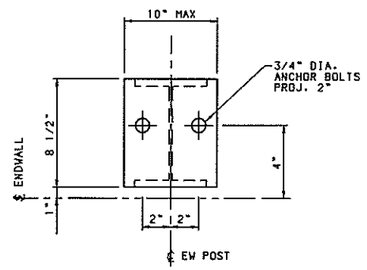

DETAIL A546 | ENDWALL POST

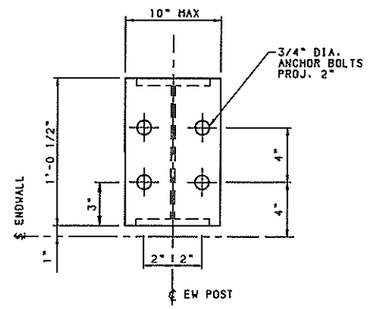

DETAIL A549 | ENDWALL POST

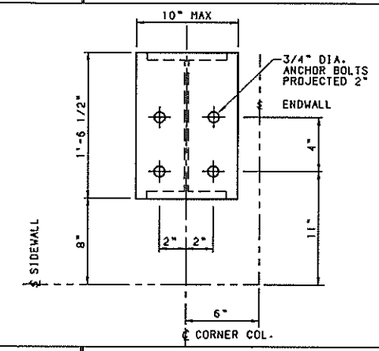

DETAIL A556 | CORNER COLUMN

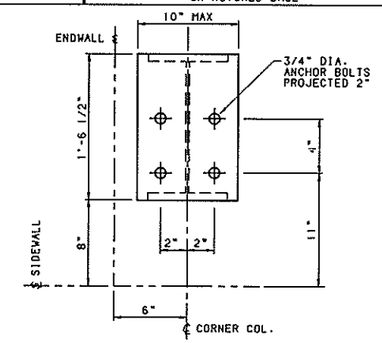

DETAIL A557 | CORNER COLUMN

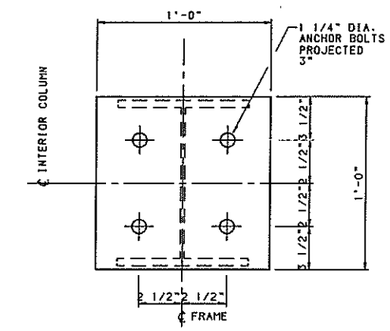

DETAIL A564 | INTERIOR COLUMN

COMMONWEALTH OF VIRGINIA
JOHN ERNEST LAMB
018906
PROFESSIONAL ENGINEER

REVISION NO. 1		REVISION NO. 2	
DATE:		DATE:	
DRAWN BY:		DRAWN BY:	
CHECKED BY:		CHECKED BY:	

BUTLER MANUFACTURING COMPANY
GENERAL OFFICES-KANSAS CITY, MISSOURI

PRODUCT OF THE PRONTO® ORDER ENGINEERING SYSTEM

BUILDER:	PROJECT:	BUILDING ORDER DESCRIPTION:	DRAWING TITLE:	KWB	AC FILE NO:
COLEMAN-ADAMS CONSTRUCTION CO. FOREST, VA	N.T.S. MARKETING LYNCHBURG, VA	100X200X26 MRF 20# Roof SL + 5#CLL 80 MPH EXP B NBC 93	ANCHOR BOLT DETAIL SHEET	GROUP: L	DATE: 01/17/97
				DRAWING NUMBER: D97-087949-01C	REV. 00

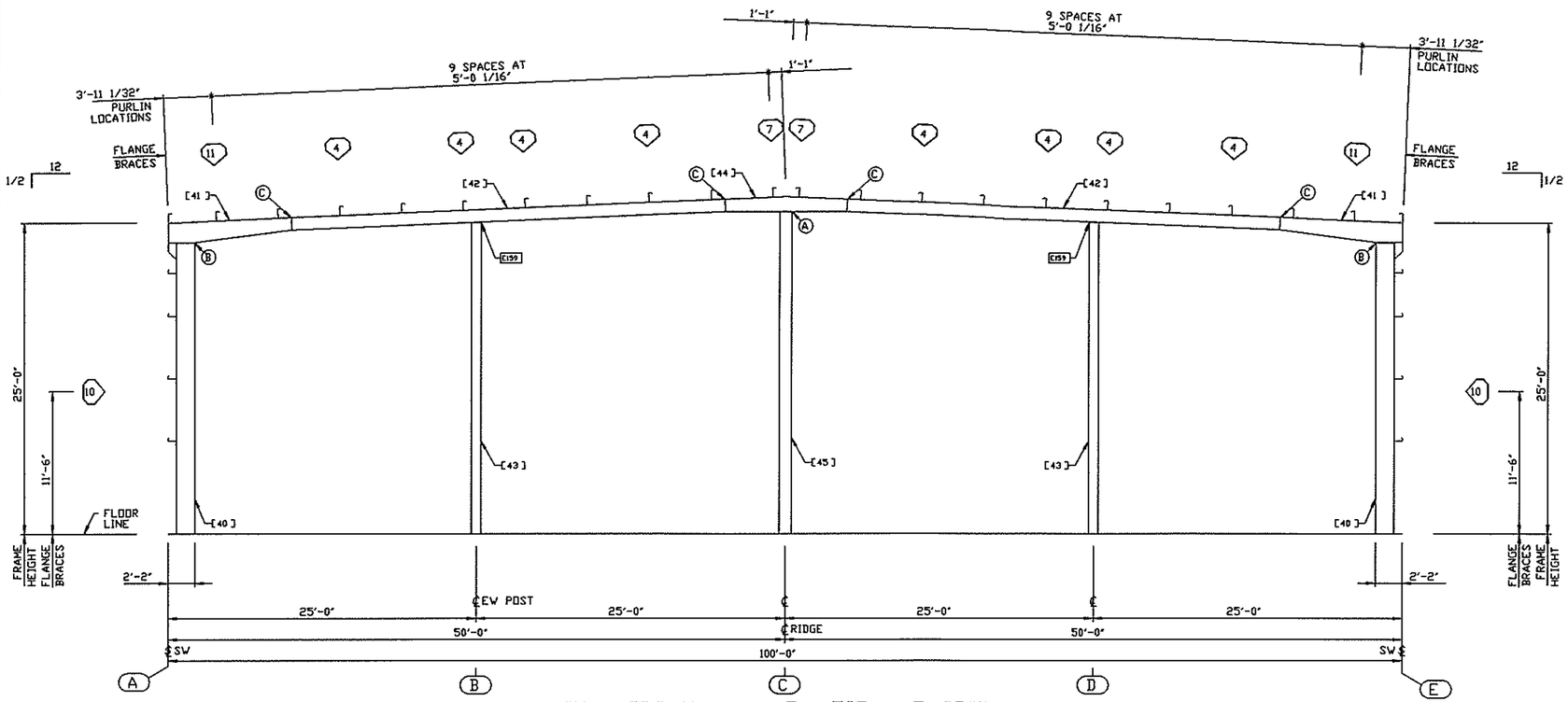

UNIT 1 FRONT EW ELEVATION AT GRID 1

PART SCHEDULE				
[ ]	PART NAME	PART NUMBER	PART LENGTH	FIELD WORK ▲
40	EW CORNER POST	L72390	23'-4 7/8"	
41	EW ROOF BEAM	L72395	9'-11 31/32"	
42	EW ROOF BEAM	L72400	35'-0 3/8"	
43	EW INTERM POST	L72405	25'-0 3/8"	
44	EW ROOF BEAM	L72410	10'-0 1/32"	
45	EW INTERM POST	L72415	25'-10 1/2"	

BOLTED CONNECTION SCHEDULE					
○	QUANTITY	BOLT NO.	DESCRIPTION	NUT NO.	DETAIL
A	04	097281	5/8X1-1/2 BOLT A325T	095233	
B	08	097282	5/8X2-1/4 BOLT A325T	095233	
C	04	097282	5/8X2-1/4 BOLT A325T	095233	

FLANGE BRACE SCHEDULE					
⬡	PART NO. FRONT/LEFT	PART NO. REAR/RIGHT	DIM. "Y"	DETAIL	FIELD WORK ▲
4	005660		1'-4 1/2"	C001	
7	005665		1'-4 1/2"	C001	
10	005675		2'-4 1/2"	C008	
11	005675		2'-4 1/2"	C002	

STANDARD NOTES:

1F0001 ALL HIGH STRENGTH BOLTS ARE A-325-T WITH HEAVY HEX NUTS AND ARE TO BE INSTALLED USING THE "TURN-OF-THE-NUT" METHOD SPECIFIED IN THE NINTH EDITION OF THE AISC "SPECIFICATION FOR STRUCTURAL JOINTS USING ASTM A325 OR A490 BOLTS" PER SECTION 8 D (1). A-325 BOLTS MAY BE INSTALLED WITHOUT WASHERS WHEN TIGHTENED BY THE "TURN-OF-THE-NUT" METHOD. IT IS THE RESPONSIBILITY OF THE ERECTOR TO ASSURE PROPER TIGHTNESS. SEE INSTALLATION OF A-325T BOLT DRAWING D-1080268 (GROUP 52-38).

COMMONWEALTH OF VIRGINIA
JOHN ERNEST LAMB
018906
PROFESSIONAL ENGINEER

REVISION NO. 1		REVISION NO. 2								
DATE:		DATE:		BUTLER MANUFACTURING COMPANY GENERAL OFFICES-KANSAS CITY, MISSOURI	PRODUCT OF THE PRONTO® ORDER ENGINEERING SYSTEM	BUILDER: COLEMAN-ADAMS CONSTRUCTION CO. FOREST, VA	PROJECT: N.T.S. MARKETING LYNCHBURG, VA	BUILDING ORDER DESCRIPTION: 100X200X26 MRF 20# Roof SL + 5#CLL 80 MPH EXP B NBC 93	DRAWING TITLE: CROSS SECTION ERECTION DRAWING	GROUP: L / AG FILE NO: / DATE: 01/24/97
DRAWN BY:		DRAWN BY:								DRAWING NUMBER: D97-087949-02 / REV. 00
CHECKED BY:		CHECKED BY:								

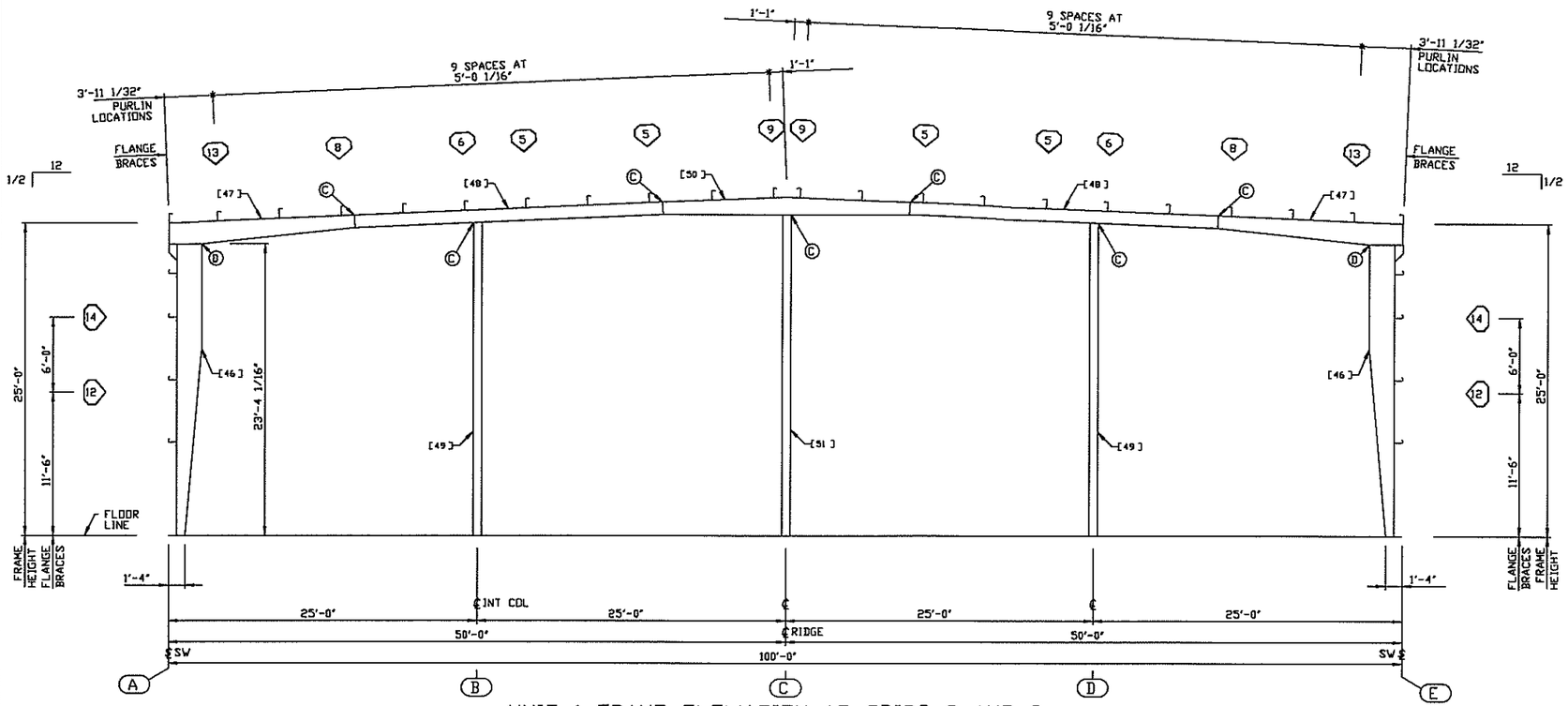

UNIT 1 FRAME ELEVATION AT GRIDS 2 AND 3

PART SCHEDULE				
[ ]	PART NAME	PART NUMBER	PART LENGTH	FIELD WORK ▲
46	EXTERIOR COLUMN	L72585	23'-4 1/16"	
47	ROOF BEAM	L72590	14'-11 15/16"	
48	ROOF BEAM	L72595	25'-0 1/4"	
49	INTERIOR COLUMN	L72600	25'-0 3/8"	
50	ROOF BEAM	L72605	20'-0 3/16"	
51	INTERIOR COLUMN	L72610	25'-8"	

BOLTED CONNECTION SCHEDULE					
○	QUANTITY	BOLT NO.	DESCRIPTION	NUT NO.	DETAIL
C	04	097282	5/8X2-1/4 BOLT A325T	095233	
D	08	097284	3/4X2-1/2 BOLT A325T	095235	

FLANGE BRACE SCHEDULE					
⬭	PART NO. FRONT/LEFT	PART NO. REAR/RIGHT	DIM. "Y"	DETAIL	FIELD WORK ▲
5	005660		1'-4 1/2"	C001	
6	005660	005660	1'-4 1/2"	C003	
8	005673		2'-4 1/2"	C001	
9	005673	005673	2'-4 1/2"	C004	
12	005683		2'-4 1/2"	C007	
13	005683		2'-4 1/2"	C001	
14	005684		2'-4 1/2"	C008	

COMMONWEALTH OF VIRGINIA
JOHN ERNEST LAMB
070006
1/20/97
PROFESSIONAL ENGINEER

REVISION NO. 1		REVISION NO. 2								
DATE:		DATE:		BUTLER MANUFACTURING COMPANY GENERAL OFFICES-KANSAS CITY, MISSOURI	PRODUCT OF THE PRONTO® ORDER ENGINEERING SYSTEM	BUILDER: COLEMAN-ADAMS CONSTRUCTION CO. FOREST, VA	PROJECT: N.T.S. MARKETING LYNCHBURG, VA	BUILDING ORDER DESCRIPTION: 100X200X26 MRF 20# Roof SL + 5#CLL 80 MPH EXP B NBC 93	DRAWING TITLE: CROSS SECTION ERECTION DRAWING	AG FILE NO:
DRAWN BY:		DRAWN BY:								GROUP: L / DATE: 01/24/97
CHECKED BY:		CHECKED BY:								DRAWING NUMBER: D97-087949-02A / REV. 00

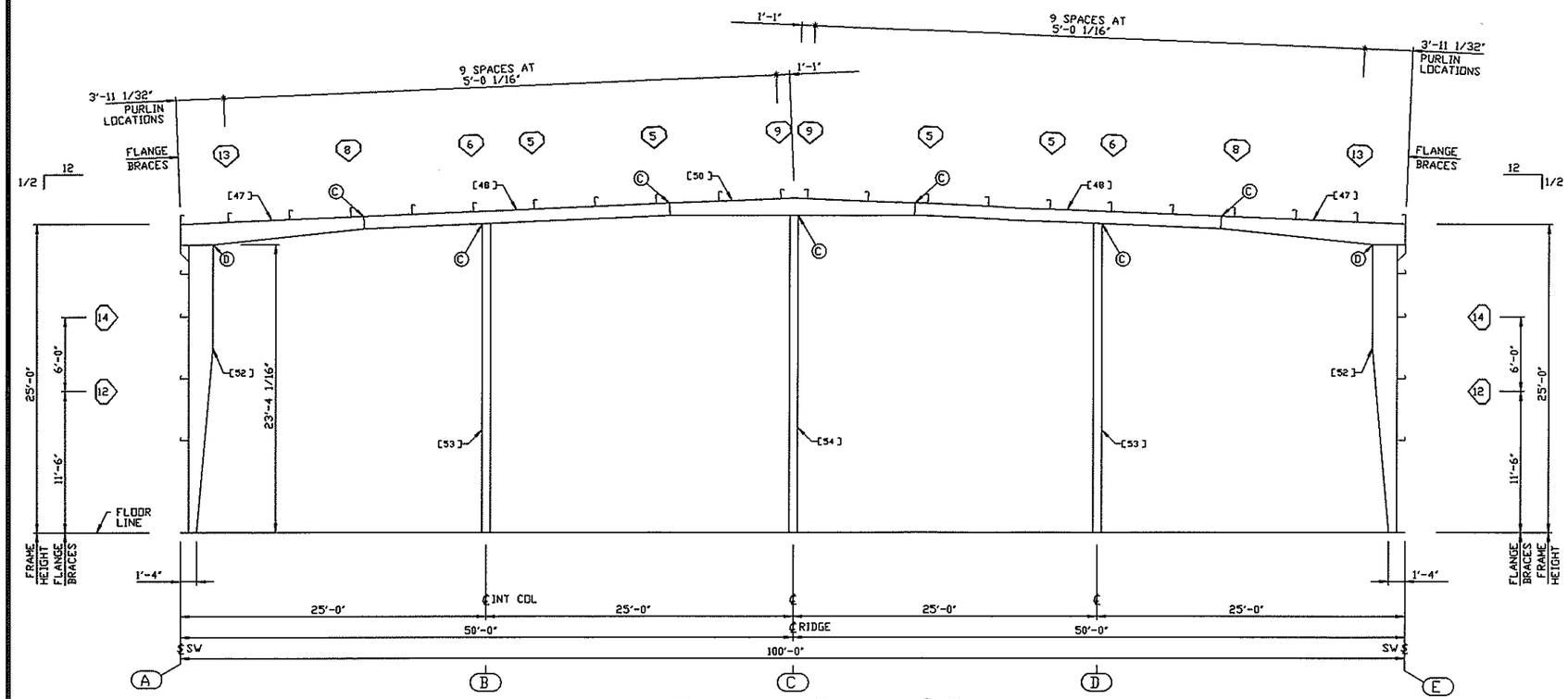

UNIT 1 FRAME ELEVATION AT GRID 4

PART SCHEDULE				
[ ]	PART NAME	PART NUMBER	PART LENGTH	FIELD WORK ▲
47	ROOF BEAM	L72590	14'-11 15/16"	
48	ROOF BEAM	L72595	25'-0 1/4"	
50	ROOF BEAM	L72605	20'-0 3/16"	
52	EXTERIOR COLUMN	L72800	23'-4 1/16"	
53	INTERIOR COLUMN	L72805	25'-0 3/8"	
54	INTERIOR COLUMN	L72810	25'-8"	

BOLTED CONNECTION SCHEDULE					
○	QUANTITY	BOLT NO.	DESCRIPTION	NUT NO.	DETAIL
C	04	097282	5/8X2-1/4 BOLT A325T	095233	
D	08	097284	3/4X2-1/2 BOLT A325T	095235	

FLANGE BRACE SCHEDULE					
⬭	PART NO. FRONT/LEFT	PART NO. REAR/RIGHT	DIM. "Y"	DETAIL	FIELD WORK ▲
5	005660		1'-4 1/2"	C001	
6	005660	005660	1'-4 1/2"	C003	
8	005673		2'-4 1/2"	C001	
9	005673	005673	2'-4 1/2"	C004	
12	005683		2'-4 1/2"	C007	
13	005683		2'-4 1/2"	C001	
14	005684		2'-4 1/2"	C008	

COMMONWEALTH OF VIRGINIA
JOHN ERNEST LAMB
018906
1/30/97
PROFESSIONAL ENGINEER

REVISION NO. 1	REVISION NO. 2								
DATE:	DATE:	BUTLER MANUFACTURING COMPANY GENERAL OFFICES-KANSAS CITY, MISSOURI	PRODUCT OF THE PRONTO® ORDER ENGINEERING SYSTEM	BUILDER: COLEMAN-ADAMS CONSTRUCTION CO. FOREST, VA	PROJECT: N.T.S. MARKETING LYNCHBURG, VA	BUILDING ORDER DESCRIPTION: 100X200X26 MRF 20# Roof SL + 5#CLL 80 MPH EXP B NBC-93	DRAWING TITLE: CROSS SECTION ERECTION DRAWING	GROUP: L	AG FILE NO: DATE: 01/24/97
DRAWN BY:	DRAWN BY:							DRAWING NUMBER: D97-087949-02B	REV. 00
CHECKED BY:	CHECKED BY:								

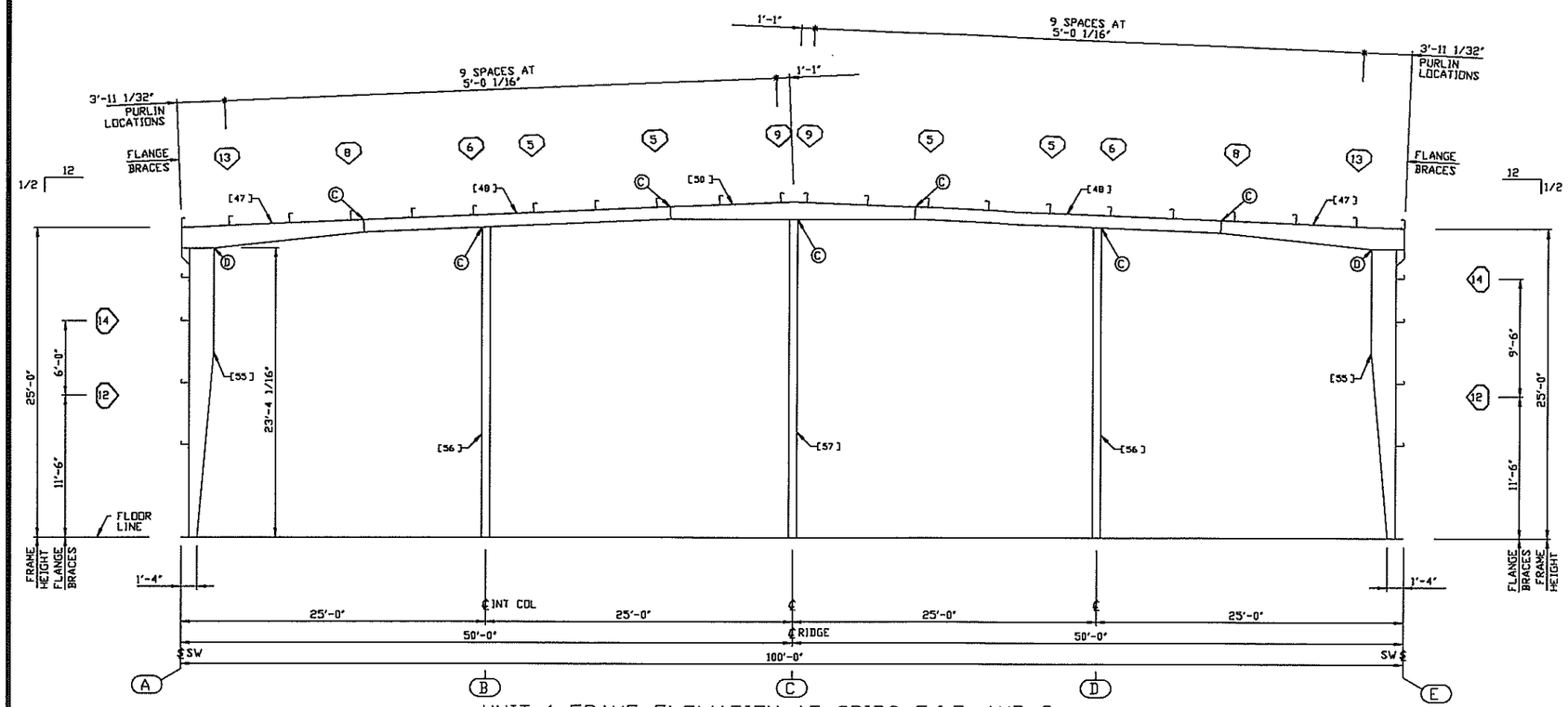

UNIT 1 FRAME ELEVATION AT GRIDS 5,6,7, AND 8

PART SCHEDULE				
[ ]	PART NAME	PART NUMBER	PART LENGTH	FIELD WORK ▲
47	ROOF BEAM	L72590	14'-11 15/16"	
48	ROOF BEAM	L72595	25'-0 1/4"	
50	ROOF BEAM	L72605	20'-0 3/16"	
55	EXTERIOR COLUMN	L72835	23'-4 1/16"	
56	INTERIOR COLUMN	L72840	25'-0 3/8"	
57	INTERIOR COLUMN	L72845	25'-8"	

BOLTED CONNECTION SCHEDULE					
○	QUANTITY	BOLT NO.	DESCRIPTION	NUT NO.	DETAIL
C	04	097282	5/8X2-1/4 BOLT A325T	095233	
D	08	097284	3/4X2-1/2 BOLT A325T	095235	

FLANGE BRACE SCHEDULE					
⬭	PART NO. FRONT/LEFT	PART NO. REAR/RIGHT	DIM. "Y"	DETAIL	FIELD WORK ▲
5	005660		1'-4 1/2"	C001	
6	005660	005660	1'-4 1/2"	C003	
8	005673		2'-4 1/2"	C001	
9	005673	005673	2'-4 1/2"	C004	
12	005683		2'-4 1/2"	C007	
13	005683		2'-4 1/2"	C001	
14	005684		2'-4 1/2"	C008	

COMMONWEALTH OF VIRGINIA
JOHN ERNEST LAMBY
018906
1/24/97
PROFESSIONAL ENGINEER

REVISION NO. 1	REVISION NO. 2							
DATE:	DATE:	BUTLER MANUFACTURING COMPANY GENERAL OFFICES-KANSAS CITY, MISSOURI	PRODUCT OF THE PRONTO® ORDER ENGINEERING SYSTEM	BUILDER: COLEMAN-ADAMS CONSTRUCTION CO. FOREST, VA	PROJECT: N.T.S. MARKETING LYNCHBURG, VA	BUILDING ORDER DESCRIPTION: 100X200X26 MRF 20# Roof SL + 5#CLL 80 MPH EXP B NBC 93	DRAWING TITLE: CROSS SECTION ERECTION DRAWING	GROUP: L
DRAWN BY:	DRAWN BY:							DATE: 01/24/97
CHECKED BY:	CHECKED BY:							DRAWING NUMBER: D97-087949-02C

AG FILE NO:

REV. 00

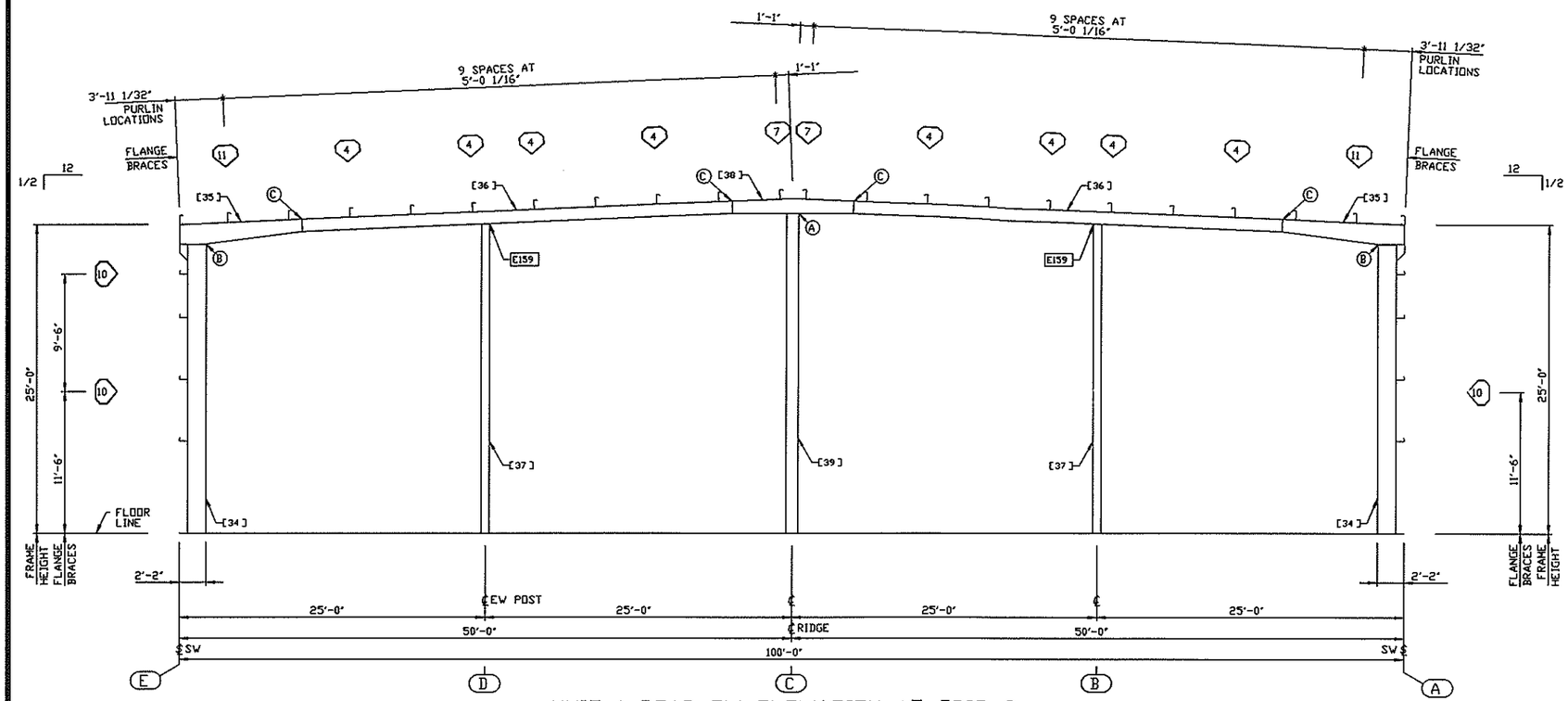

UNIT 1 REAR EW ELEVATION AT GRID 9

PART SCHEDULE				
[ ]	PART NAME	PART NUMBER	PART LENGTH	FIELD WORK ▲
34	EW CORNER POST	L72280	23'-4 7/8"	
35	EW ROOF BEAM	L72285	9'-11 31/32"	
36	EW ROOF BEAM	L72290	35'-0 3/8"	
37	EW INTERM POST	L72295	25'-0 3/8"	
38	EW ROOF BEAM	L72300	10'-0 1/32"	
39	EW INTERM POST	L72305	25'-10 1/2"	

BOLTED CONNECTION SCHEDULE					
○	QUANTITY	BOLT NO.	DESCRIPTION	NUT NO.	DETAIL
A	04	097281	5/8X1-1/2 BOLT A325T	095233	
B	08	097282	5/8X2-1/4 BOLT A325T	095233	
C	04	097282	5/8X2-1/4 BOLT A325T	095233	

FLANGE BRACE SCHEDULE					
⬭	PART NO. FRONT/LEFT	PART NO. REAR/RIGHT	DIM. "Y"	DETAIL	FIELD WORK ▲
4	005660		1'-4 1/2"	C001	
7	005665		1'-4 1/2"	C001	
10	005675		2'-4 1/2"	C008	
11	005675		2'-4 1/2"	C002	

COMMONWEALTH OF VIRGINIA
JOHN ERNEST LAMB
018906
1/30/97
PROFESSIONAL ENGINEER

REVISION NO. 1		REVISION NO. 2								
DATE:		DATE:		BUTLER MANUFACTURING COMPANY GENERAL OFFICES-KANSAS CITY, MISSOURI	PRODUCT OF THE PRONTO® ORDER ENGINEERING SYSTEM	BUILDER: COLEMAN-ADAMS CONSTRUCTION CO. FOREST, VA	PROJECT: N.T.S. MARKETING LYNCHBURG, VA	BUILDING ORDER DESCRIPTION: 100X200X26 MRF 20# Roof SL + 5#CLL 80 MPH EXP B NBC 93	DRAWING TITLE: CROSS SECTION ERECTION DRAWING	AG FILE NO:
DRAWN BY:		DRAWN BY:								GROUP: L / DATE: 01/24/97
CHECKED BY:		CHECKED BY:								DRAWING NUMBER: D97-087949-02D / REV. 00

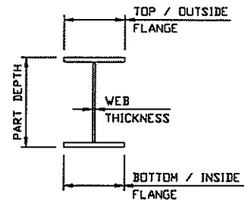

FRAME DESIGN INFORMATION

PART	DESCRIPTION
ROOF BEAM L72590 179-7	TOP FLANGE = 6" X .250"
	BOTTOM FLANGE = 6" X .250"
	WEB THICKNESS = .160"
	PART DEPTH = VARIES 21" TO 12"
ROOF BEAM L72595 300-2	TOP FLANGE = 5" X .188"
	BOTTOM FLANGE = 5" X .250"
	WEB THICKNESS = .140" - LOW END TO 15'-0 7/16" FROM LOW END .100" - 15'-0 7/16" FROM LOW END TO HIGH END
	PART DEPTH = 11 15/16"
ROOF BEAM L72605 240-2	TOP FLANGE = 5" X .188"
	BOTTOM FLANGE = 5" X .188"
	WEB THICKNESS = .140"
	PART DEPTH = VARIES 12" TO 16" TO 11"
EW CORNER POST L72280 280-7	TOP FLANGE = 5" X .188"
	BOTTOM FLANGE = 5" X .188"
	WEB THICKNESS = .100"
	PART DEPTH = 18"
EW ROOF BEAM L72285 120-0	TOP FLANGE = 5" X .188"
	BOTTOM FLANGE = 5" X .188"
	WEB THICKNESS = .120"
	PART DEPTH = VARIES 20" TO 12"
EW ROOF BEAM L72290 420-3	TOP FLANGE = 5" X .188"
	BOTTOM FLANGE = 5" X .188"
	WEB THICKNESS = .120" - LOW END TO 20'-0 1/8" FROM LOW END .100" - 20'-0 1/8" FROM LOW END TO HIGH END
	PART DEPTH = 11 7/8"
EW INTERM POST L72295 300-3	TOP FLANGE = 5" X .188"
	BOTTOM FLANGE = 5" X .188"
	WEB THICKNESS = .100"
	PART DEPTH = 7 7/8"
EW ROOF BEAM L72300 120-0	TOP FLANGE = 5" X .188"
	BOTTOM FLANGE = 5" X .188"
	WEB THICKNESS = .120"
	PART DEPTH = VARIES 12" TO 14 1/2" TO 11"
EW INTERM POST L72305 310-4	TOP FLANGE = 5" X .188"
	BOTTOM FLANGE = 5" X .188"
	WEB THICKNESS = .100"
	PART DEPTH = 11 7/8"
EW CORNER POST L72390 280-7	TOP FLANGE = 6" X .250"
	BOTTOM FLANGE = 6" X .250"
	WEB THICKNESS = .219"
	PART DEPTH = 18"
EW ROOF BEAM L72395 120-0	TOP FLANGE = 5" X .188"
	BOTTOM FLANGE = 5" X .188"
	WEB THICKNESS = .120"
	PART DEPTH = VARIES 20" TO 12"
EW ROOF BEAM L72400 420-3	TOP FLANGE = 5" X .188"
	BOTTOM FLANGE = 5" X .188"
	WEB THICKNESS = .120" - LOW END TO 20'-0 1/8" FROM LOW END .100" - 20'-0 1/8" FROM LOW END TO HIGH END
	PART DEPTH = 11 7/8"
EW INTERM POST L72405 300-3	TOP FLANGE = 6" X .375"
	BOTTOM FLANGE = 6" X .375"
	WEB THICKNESS = .250"
	PART DEPTH = 9"
EW ROOF BEAM L72410 120-0	TOP FLANGE = 5" X .188"
	BOTTOM FLANGE = 5" X .188"
	WEB THICKNESS = .120"
	PART DEPTH = VARIES 12" TO 14 1/2" TO 11"

FRAME DESIGN INFORMATION (cont.)

PART	DESCRIPTION
EW INTERM POST L72415 310-4	TOP FLANGE = 6" X .250"
	BOTTOM FLANGE = 6" X .250"
	WEB THICKNESS = .219"
	PART DEPTH = 12"
EXTERIOR COLUMN L72585 280-1	TOP FLANGE = 6" X .250"
	BOTTOM FLANGE = 6" X .250"
	WEB THICKNESS = .219"
	PART DEPTH = VARIES 8" TO 24" TO 24"
INTERIOR COLUMN L72600 300-3	TOP FLANGE = 7" X .375"
	BOTTOM FLANGE = 7" X .375"
	WEB THICKNESS = .250"
	PART DEPTH = 8 1/4"
INTERIOR COLUMN L72610 308-0	TOP FLANGE = 7" X .375"
	BOTTOM FLANGE = 7" X .375"
	WEB THICKNESS = .250"
	PART DEPTH = 8 1/4"
EXTERIOR COLUMN L72800 280-1	TOP FLANGE = 8" X .375"
	BOTTOM FLANGE = 8" X .375"
	WEB THICKNESS = .250"
	PART DEPTH = VARIES 8" TO 24" TO 24"
INTERIOR COLUMN L72805 300-3	TOP FLANGE = 7" X .375"
	BOTTOM FLANGE = 7" X .375"
	WEB THICKNESS = .250"
	PART DEPTH = 8 1/4"
INTERIOR COLUMN L72810 308-0	TOP FLANGE = 7" X .250"
	BOTTOM FLANGE = 7" X .250"
	WEB THICKNESS = .219"
	PART DEPTH = 8"
EXTERIOR COLUMN L72835 280-1	TOP FLANGE = 8" X .375"
	BOTTOM FLANGE = 8" X .375"
	WEB THICKNESS = .250"
	PART DEPTH = VARIES 8" TO 24" TO 24"
INTERIOR COLUMN L72840 300-3	TOP FLANGE = 8" X .375"
	BOTTOM FLANGE = 8" X .375"
	WEB THICKNESS = .250"
	PART DEPTH = 8"
INTERIOR COLUMN L72845 308-0	TOP FLANGE = 8" X .375"
	BOTTOM FLANGE = 8" X .375"
	WEB THICKNESS = .250"
	PART DEPTH = 8"

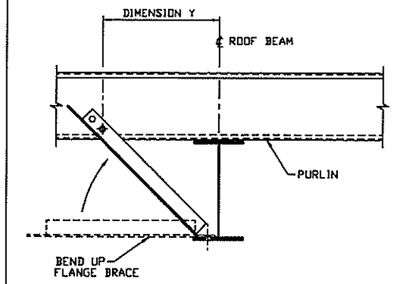

USE (2) 1/2" X 1 1/4" HEX. BOLT (095085) AND 1/2" HEX. NUT (095032)

DETAIL C001 — SINGLE FLANGE BRACE CONNECTION USE FIRST HOLE AT PURLIN CONNECTION

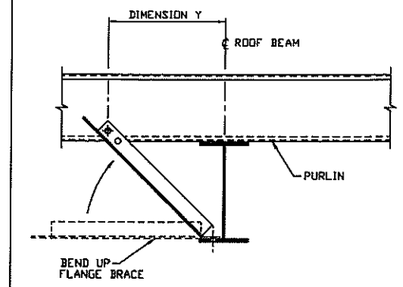

USE (2) 1/2" X 1 1/4" HEX. BOLT (095085) AND 1/2" HEX. NUT (095032)

DETAIL C002 — SINGLE FLANGE BRACE CONNECTION USE SECOND HOLE AT PURLIN CONNECTION

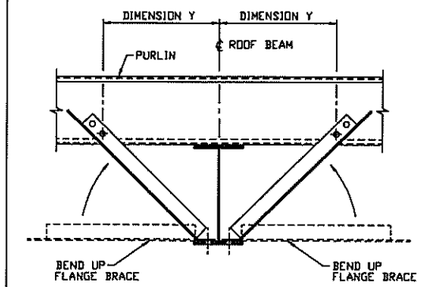

USE (4) 1/2" X 1 1/4" HEX. BOLT (095085) AND 1/2" HEX. NUT (095032)

DETAIL C003 — DOUBLE FLANGE BRACE CONNECTION USE FIRST HOLE AT PURLIN CONNECTION

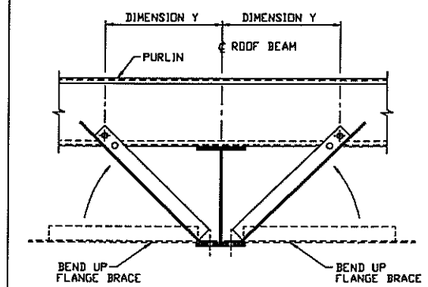

USE (4) 1/2" X 1 1/4" HEX. BOLT (095085) AND 1/2" HEX. NUT (095032)

DETAIL C004 — DOUBLE FLANGE BRACE CONNECTION USE SECOND HOLE AT PURLIN CONNECTION

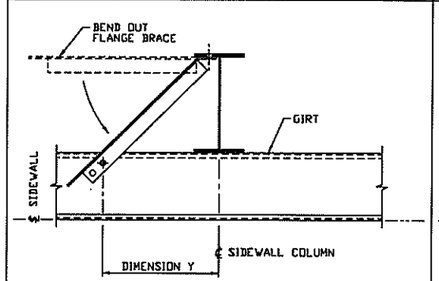

USE (2) 1/2" X 1 1/4" HEX. BOLT (095085) AND 1/2" HEX. NUT (095032)

DETAIL C007 — SINGLE FLANGE BRACE CONNECTION USE FIRST HOLE AT SIDEWALL GIRT CONNECTION

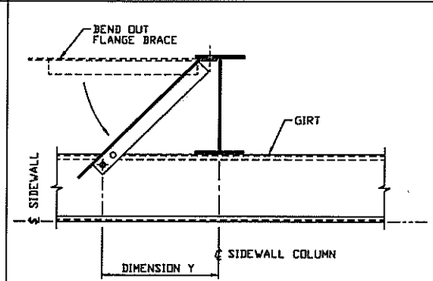

USE (2) 1/2" X 1 1/4" HEX. BOLT (095085) AND 1/2" HEX. NUT (095032)

DETAIL C008 — SINGLE FLANGE BRACE CONNECTION USE SECOND HOLE AT SIDEWALL GIRT CONNECTION

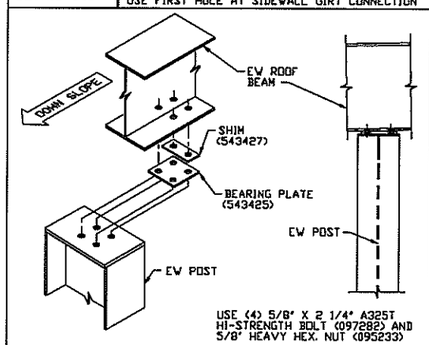

USE (4) 5/8" X 2 1/4" A325T HI-STRENGTH BOLT (097282) AND 5/8" HEAVY HEX. NUT (095233)

DETAIL E159 — ENDWALL POST TOP CONNECTION 1/2:12 SLOPE (.375 THRU .625)

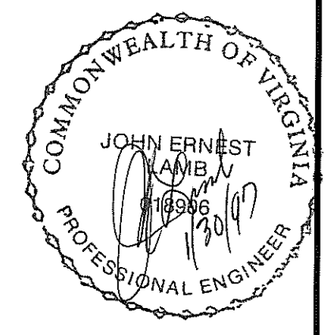

REVISION NO. 1	REVISION NO. 2						
DATE:	DATE:	BUTLER MANUFACTURING COMPANY GENERAL OFFICES-KANSAS CITY, MISSOURI	PRODUCT OF THE PRONTO® ORDER ENGINEERING SYSTEM	BUILDER: COLEMAN-ADAMS CONSTRUCTION CO. FOREST, VA	PROJECT: N.T.S. MARKETING LYNCHBURG, VA	BUILDING ORDER DESCRIPTION: 100X200X26 MRF 20# Roof SL + 5#CLL 80 MPH EXP B NBC 93	DRAWING TITLE: CROSS SECTION ERECTION DRAWING DETAIL SHEET
DRAWN BY:	DRAWN BY:						GROUP: L
CHECKED BY:	CHECKED BY:						DRAWING NUMBER: D97-087949-02E

AG FILE NO:
DATE: 01/24/97
REV. 00

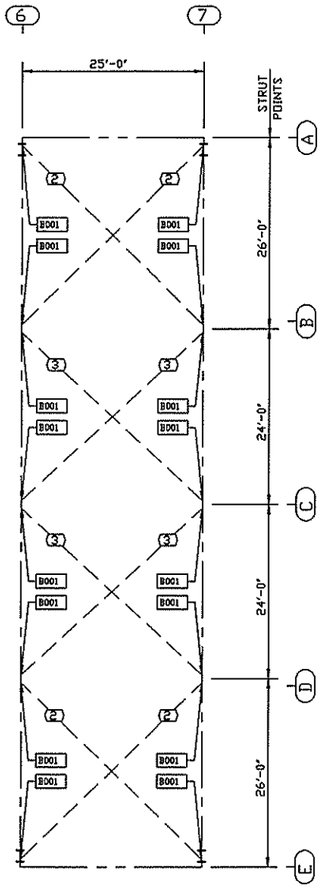

UNIT 1 ROOF BRACING

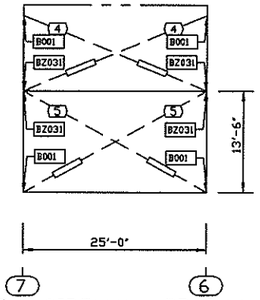

UNIT 1 SIDEWALL BRACING
AT GRID A

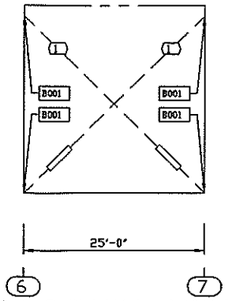

UNIT 1 SIDEWALL BRACING
AT GRID E

BRACE ROD SCHEDULE					
⬭	QTY	PART NUMBER	DESCRIPTION	THREAD	TURNBUCKLE
1	2	0544050 240-0	7/8" BRACEROD	RH-RH	0095048
		0544060 178-0	7/8" BRACEROD	RH-LH	
2	4	0544049 428-0	3/4" BRACEROD	RH-RH	
3	4	0544046 414-0	7/16" BRACEROD	RH-RH	
4	2	0544050 240-0	7/8" BRACEROD	RH-RH	0095048
		0544060 074-0	7/8" BRACEROD	RH-LH	
5	2	0544050 240-0	7/8" BRACEROD	RH-RH	0095048
		0544060 085-0	7/8" BRACEROD	RH-LH	

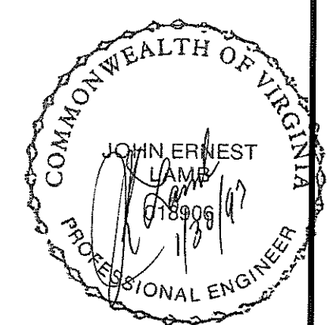

REVISION NO. 1	REVISION NO. 2						
DATE:	DATE:	BUTLER MANUFACTURING COMPANY GENERAL OFFICES-KANSAS CITY, MISSOURI	PRODUCT OF THE PRONTO® ORDER ENGINEERING SYSTEM	BUILDER: COLEMAN-ADAMS CONSTRUCTION CO. FOREST, VA	PROJECT: N.T.S. MARKETING LYNCHBURG, VA	BUILDING ORDER DESCRIPTION: 100X200X26 MRF 20# Roof SL + 5#CLL 80 MPH EXP B NBC 93	DRAWING TITLE: WIND BRACING DRAWING
DRAWN BY:	DRAWN BY:						
CHECKED BY:	CHECKED BY:						

AG FILE NO:
GROUP: L
DATE: 01/24/97
DRAWING NUMBER: D97-087949-03
REV. 00

ROD DIA.	NUT	WASHERS		
		A	B	C
7/16"	095083	095133	095165	020821
1/2"	095032	095133	095165	020821
5/8"	095231	095298	095165	020821
3/4"	095235	095264	095948	020822
7/8"	095237	095264	095948	020822

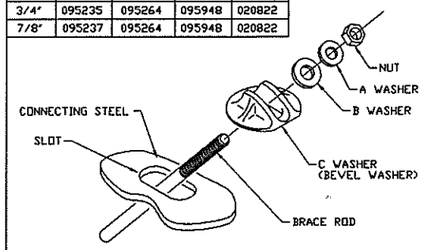

DETAIL B001 | TYPICAL BEVEL WASHER CONNECTION

ROD DIA.	CLEVIS ASSY.
5/8"	095277
3/4"	095278
7/8"	095279
1"	095280
1 1/8"	095281
1 1/4"	095282

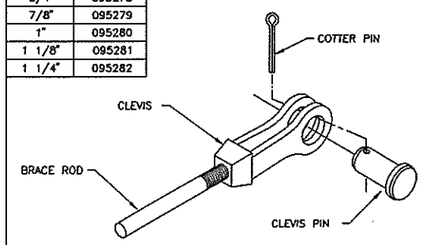

REV. DATE: 09/30/96 REV. NO. 02
DETAIL B002 | TYPICAL CLEVIS CONNECTION

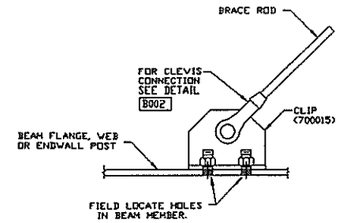

USE (4) 3/4" X 2 1/2" A325T HI-STRENGTH BOLT (097284) AND 3/4" HEAVY HEX. NUT (095235)

NOTE: REFER TO SPECIFIC BUILDING BRACING DRAWING FOR BRACE ROD REQUIREMENTS.

DETAIL BZ031 | BRACE CLIP CONNECTION

COMMONWEALTH OF VIRGINIA
JOHN ERNEST LAMB
018906
1/30/97
PROFESSIONAL ENGINEER

REVISION NO. 1	REVISION NO. 2								
DATE:	DATE:	BUTLER MANUFACTURING COMPANY GENERAL OFFICES-KANSAS CITY, MISSOURI	PRODUCT OF THE PRONTO® ORDER ENGINEERING SYSTEM	BUILDER: COLEMAN-ADAMS CONSTRUCTION CO. FOREST, VA	PROJECT: N.T.S. MARKETING LYNCHBURG, VA	BUILDING ORDER DESCRIPTION: 100X200X26 MRF 20# Roof SL + 5#CLL 80 MPH EXP B NBC.93	DRAWING TITLE: WIND BRACING DETAIL SHEET	GROUP: L	AG FILE NO:
DRAWN BY:	DRAWN BY:							DATE: 01/24/97	
CHECKED BY:	CHECKED BY:							DRAWING NUMBER: D97-087949-03A	REV. 00

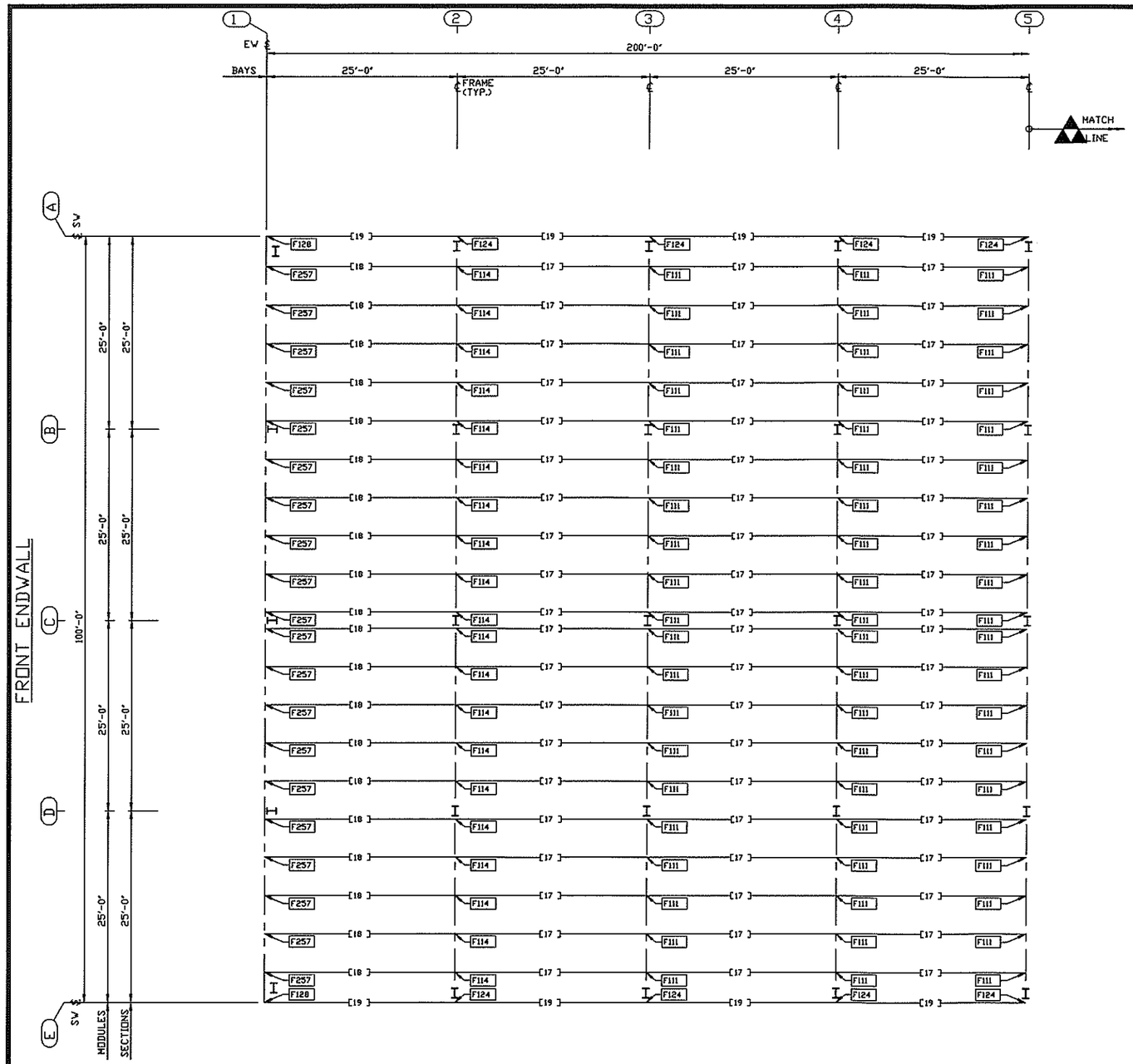

PART SCHEDULE				
[ ]	PART NAME	PART NUMBER	PART LENGTH	FIELD WORK ▲
17	PURLIN	530642 335-4	27'-11 1/2"	
18	PURLIN	530643 335-4	27'-11 1/2"	
19	EAVE STRUT	540158 299-4	24'-11 1/2"	

PURLIN BRACE LOCATION SCHEDULE					
BETWEEN GRIDS	LOCATION DETAIL	BRACE SECTION TOP	BRACE SECTION BOTTOM	DIM. "B"	RIDGE BRACE
1 AND 2	F146	(2) B	-0-	7'-4 1/2"	(2)0544141
2 AND 3	F146	(2) B	-0-	7'-4 1/2"	(2)0544141
3 AND 4	F146	(2) B	-0-	7'-4 1/2"	(2)0544141
4 AND 5	F146	(2) B	-0-	7'-4 1/2"	(2)0544141

STANDARD NOTES:

RS0002 REFER TO DRAWING B-1080945 FOR PURLIN BRACE PART NUMBERS AND TYPICAL INSTALLATION FOR SLOPE LESS THAN OR EQUAL TO 0.75:12.

RS0008 REFER TO DETAIL F262 FOR RIDGE PURLIN BRACE CONNECTION.

COMMONWEALTH OF VIRGINIA
JOHN ERNEST LAMB
18908
1/30/97
PROFESSIONAL ENGINEER

UNIT 1 ROOF SECONDARY STRUCTURAL FRAMING PLAN

REVISION NO. 1	REVISION NO. 2							
DATE:	DATE:	BUTLER MANUFACTURING COMPANY GENERAL OFFICES-KANSAS CITY, MISSOURI	PRODUCT OF THE PRONTO® ORDER ENGINEERING SYSTEM	BUILDER: COLEMAN-ADAMS CONSTRUCTION CO. FOREST, VA	PROJECT: N.T.S. MARKETING LYNCHBURG, VA	BUILDING ORDER DESCRIPTION: 100X200X26 MRF 20# Roof SL + 5#CLL 80 MPH EXP B NBC 93	DRAWING TITLE: ROOF SECONDARY STRUCTURAL FRAMING PLAN	AG FILE NO:
DRAWN BY:	DRAWN BY:						GROUP: L	DATE: 01/24/97
CHECKED BY:	CHECKED BY:						DRAWING NUMBER: D97-087949-04	REV. 00

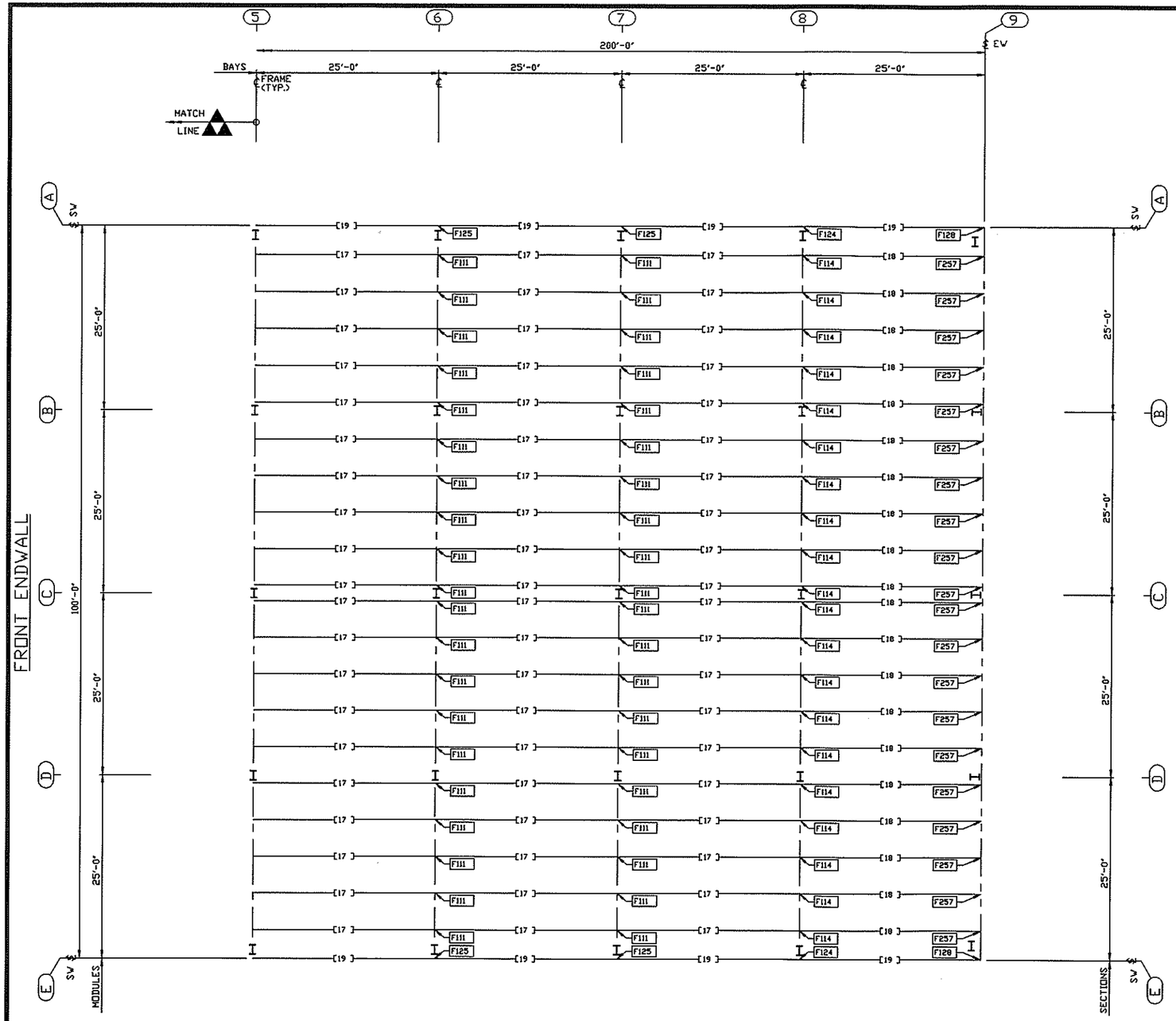

PART SCHEDULE				
[ ]	PART NAME	PART NUMBER	PART LENGTH	FIELD WORK ▲
17	PURLIN	530642 335-4	27'-11 1/2"	
18	PURLIN	530643 335-4	27'-11 1/2"	
19	EAVE STRUT	540158 299-4	24'-11 1/2"	

PURLIN BRACE LOCATION SCHEDULE					
BETWEEN GRIDS	LOCATION DETAIL	BRACE SECTION TOP	BRACE SECTION BOTTOM	DIM. "B"	RIDGE BRACE
5 AND 6	F146	(2) B	-0-	7'-4 1/2"	(2)0544141
6 AND 7	F146	(2) B	-0-	7'-4 1/2"	(2)0544141
7 AND 8	F146	(2) B	-0-	7'-4 1/2"	(2)0544141
8 AND 9	F146	(2) B	-0-	7'-4 1/2"	(2)0544141

COMMONWEALTH OF VIRGINIA
JOHN ERNEST LAMB
018906
1/30/97
PROFESSIONAL ENGINEER

UNIT 1 ROOF SECONDARY STRUCTURAL FRAMING PLAN

REVISION NO. 1	REVISION NO. 2							
DATE:	DATE:	BUTLER MANUFACTURING COMPANY GENERAL OFFICES-KANSAS CITY, MISSOURI	PRODUCT OF THE PRONTO® ORDER ENGINEERING SYSTEM	BUILDER: COLEMAN-ADAMS CONSTRUCTION CO. FOREST, VA	PROJECT: N.T.S. MARKETING LYNCHBURG, VA	BUILDING ORDER DESCRIPTION: 100X200X26 MRF 20# Roof SL + 5#CLL 80 MPH EXP. B NBC 93	DRAWING TITLE: ROOF SECONDARY STRUCTURAL FRAMING PLAN	AG FILE NO:
DRAWN BY:	DRAWN BY:						GROUP: L	DATE: 01/24/97
CHECKED BY:	CHECKED BY:						DRAWING NUMBER: D97-087949-04A	REV. 00

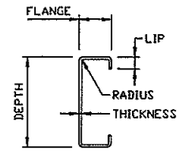

C - SECTION DESIGN INFORMATION					
PART	DEPTH	FLANGE	LIP	THICKNESS	RADIUS
EAVE STRUT 540158 299-4	9 1/2"	3 1/2"	7/8"	.066"	5/16"

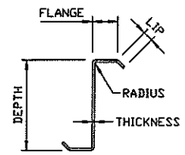

Z - SECTION DESIGN INFORMATION					
PART	DEPTH	FLANGE	LIP	THICKNESS	RADIUS
PURLIN 530642 335-4	9 1/2"	2 3/4"	1/16"	.067"	1/4"
PURLIN 530643 335-4	9 1/2"	2 3/4"	1/16"	.073"	1/4"

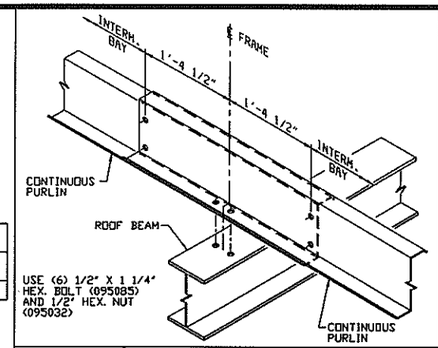

DETAIL F111 — CONTINUOUS SPAN PURLIN CONNECTION
INTERM. LOCATION - 9 1/2" PURLIN

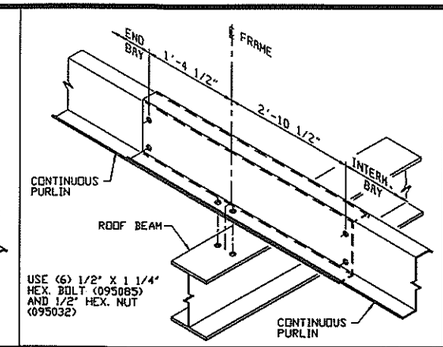

DETAIL F114 — CONTINUOUS SPAN PURLIN CONNECTION
END BAY LOCATION - 9 1/2" PURLIN

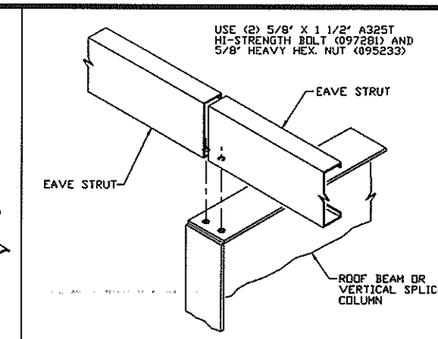

DETAIL F124 — EAVE STRUT CONN. TO INTERM. FRAME

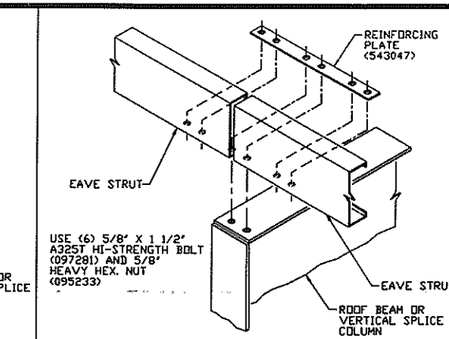

DETAIL F125 — EAVE STRUT CONN. TO INTERM. FRAME
STRUT CONNECTION

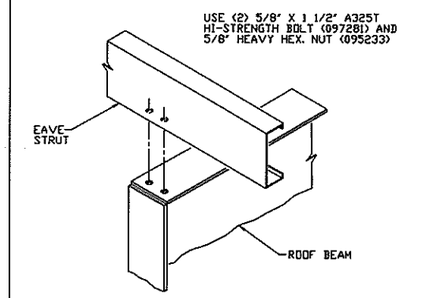

DETAIL F128 — EAVE STRUT CONN. TO ENDWALL FRAME

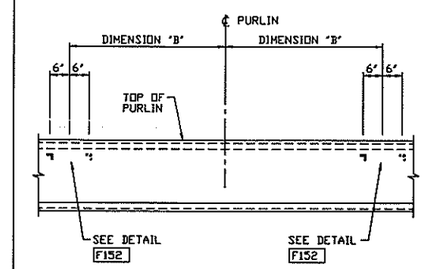

DETAIL F146 — PURLIN BRACE LAYOUT
(2) ROWS TOP - (0) ROWS BOTTOM

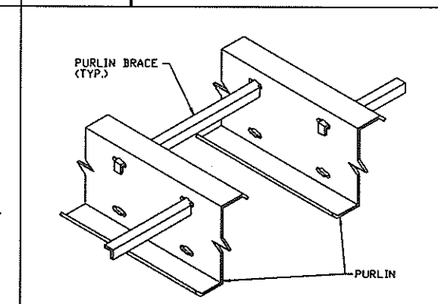

DETAIL F152 — PURLIN BRACE
TOP ROW

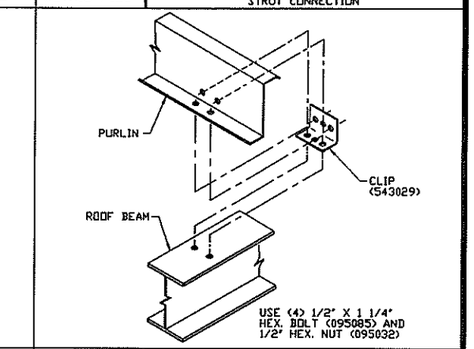

DETAIL F257 — PURLIN CONNECTION TO EW ROOF BEAM

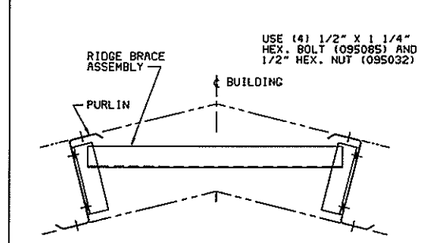

DETAIL F262 — RIDGE CHANNEL CONNECTION

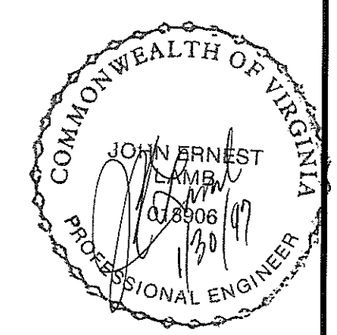

REVISION NO. 1		REVISION NO. 2									
DATE:		DATE:		BUTLER MANUFACTURING COMPANY GENERAL OFFICES-KANSAS CITY, MISSOURI	PRODUCT OF THE PRONTO® ORDER ENGINEERING SYSTEM	BUILDER: COLEMAN-ADAMS CONSTRUCTION CO. FOREST, VA	PROJECT: N.T.S. MARKETING LYNCHBURG, VA	BUILDING ORDER DESCRIPTION: 100X200X26 MRF 20# Roof SL + 5#CLL 80 MPH EXP B NBC 93	DRAWING TITLE: ROOF SECONDARY STRUCTURAL DETAIL SHEET	GROUP: L	AG FILE NO: DATE: 01/24/97
DRAWN BY:		DRAWN BY:								DRAWING NUMBER: D97-087949-04B	REV. 00
CHECKED BY:		CHECKED BY:									

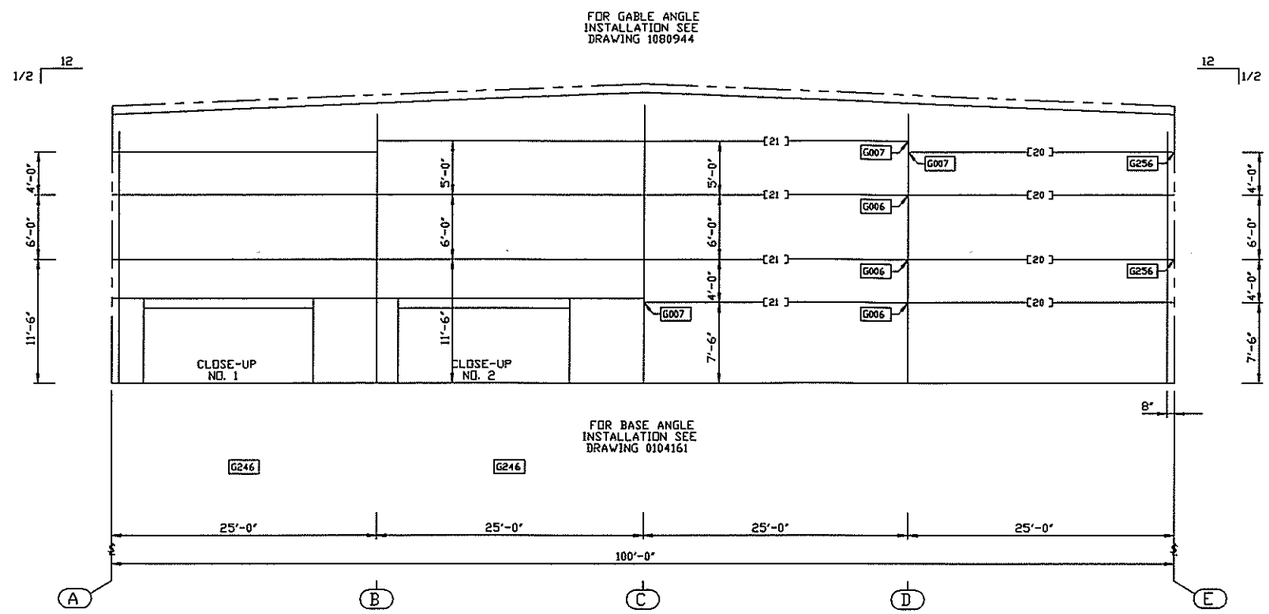

UNIT 1 FRONT EW STRUCTURAL ELEVATION AT GRID 1

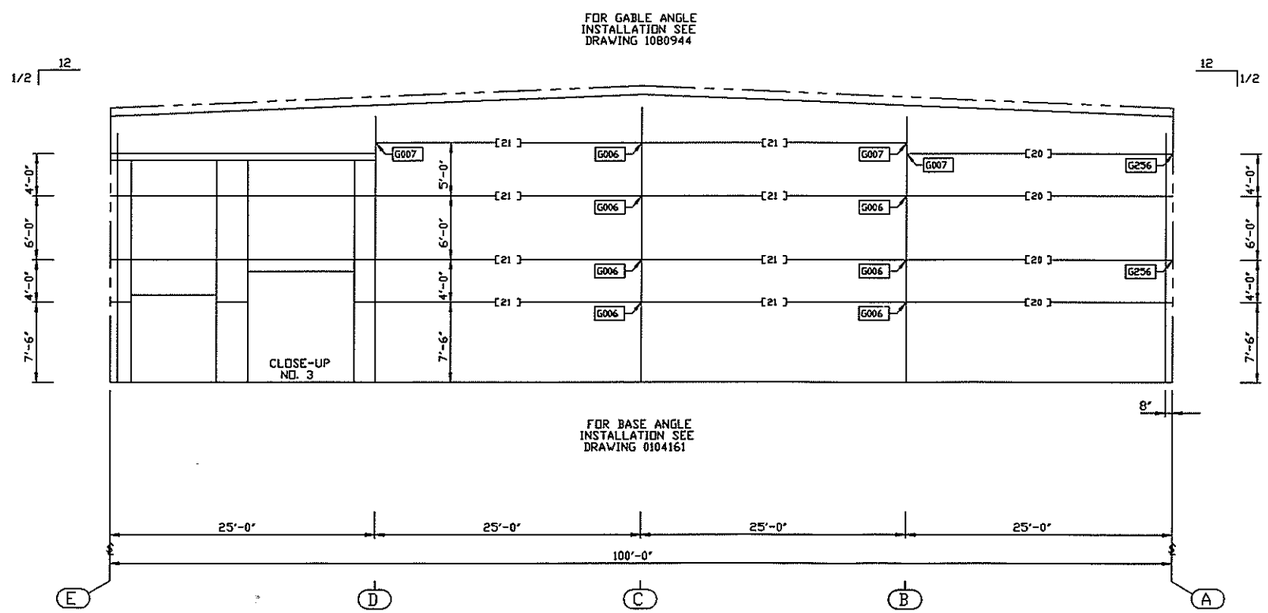

UNIT 1 REAR EW STRUCTURAL ELEVATION AT GRID 9

PART SCHEDULE

[ ]	PART NAME	PART NUMBER	PART LENGTH	FIELD WORK ▲
20	GIRT	550302 271-2	22'-7 1/4"	
21	GIRT	550302 289-2	24'-1 1/4"	
22	GIRT	550303 025-2	2'-1 1/4"	
23	GIRT	550303 085-2	7'-1 1/4"	
26	DOOR HEADER	580123	17'-11 1/2"	2
27	DOOR POST	580263	8'-11 7/16"	1
28	DOOR HEADER	580273	9'-11 1/2"	
29	DOOR HEADER	580273	9'-11 1/2"	7
30	DOOR POST	580402	21'-0 7/16"	5
31	DOOR POST	580402	21'-0 7/16"	6
32	(2) DOOR HEADER	580629	23'-11 1/2"	3
33	(2) DOOR HEADER	580637	24'-11 1/2"	4

FIELD WORK SCHEDULE

▲	DETAIL	FIELD WORK DIMENSIONS		
1	X042	A = 7'-6 7/16"	B = 1'-5"	C = 7/8"
		D = 1 1/2"		
2	X026	A = 15'-11 1/2"	B = 2'-0"	
3	X055	A = 22'-6 1/8"	B = 1'-5 3/8"	C = 2"
		D = 7/8"	E = 3"	F = 3"
4	X027	A = 5 3/8"	B = 24'-0 3/4"	C = 5 3/8"
		D = 3"	E = 7/8"	F = 7/8"
5	X042	A = 20'-6 7/16"	B = 6"	C = 7/8"
		D = 1 1/2"		
6	X044	A = 20'-6 7/16"	B = 6"	C = 7/8"
		D = 20'-1 1/16"	E = 1 1/2"	
7	X026	A = 7'-11 1/2"	B = 2'-0"	

STANDARD NOTES:

WS0006 FILL ALL OPEN HOLES IN DOOR POST WEBS WITH PLASTIC SNAP-IN PLUGS (097229).

WS0010 THIS UNIT HAS AN OVERHEAD DOOR REQUIRING A DOUBLE "C" HEADER. BOLT THE TWO "C" HEADERS TOGETHER WITH (2) 1/2" X 1 1/4" BOLTS (095085) AND NUTS (095032) ON APPROXIMATELY 5'-0" CENTERS. IF FACTORY HOLES ARE NOT PROVIDED IN HEADERS, FIELD LOCATE 9/16" DIA. HOLES AS REQUIRED.

WS0011 GIRTS MUST BE INSTALLED ABOVE DOUBLE C HEADER AT STANDARD LOCATION.

WS0014 UNPUNCHED GIRTS ARE SUPPLIED AT OVERHEAD OR SLIDE DOORS. PUNCHED WALL SYSTEMS REQUIRE THE FIELD DRILLING OF THE 5/16" PANEL ATTACHMENT HOLES IN THE GIRT FLANGE.

WS0023 I M P O R T A N T
REFER TO PRONTO DETAIL G047 FOR PROPER GIRT ALIGNMENT.

COMMONWEALTH OF VIRGINIA
JOHN ERNEST LAMB
078006
1/30/97
PROFESSIONAL ENGINEER

REVISION NO. 1	REVISION NO. 2								
DATE:	DATE:	BUTLER MANUFACTURING COMPANY GENERAL OFFICES-KANSAS CITY, MISSOURI	PRODUCT OF THE PRONTO® ORDER ENGINEERING SYSTEM	BUILDER: COLEMAN-ADAMS CONSTRUCTION CO. FOREST, VA	PROJECT: N.T.S. MARKETING LYNCHBURG, VA	BUILDING ORDER DESCRIPTION: 100X200X26 MRF 20# Roof SL + 5#CLL 80 MPH EXP B NBC 93	DRAWING TITLE: WALL SECONDARY STRUCTURAL ELEVATION	GROUP: L	AG FILE NO:
DRAWN BY:	DRAWN BY:							DATE: 01/24/97	
CHECKED BY:	CHECKED BY:							DRAWING NUMBER: D97-087949-05	REV. 00

PART SCHEDULE				
[ ]	PART NAME	PART NUMBER	PART LENGTH	FIELD WORK ▲
15	PURLIN / GIRT	530629 323-4	26'-11 1/2"	
16	PURLIN / GIRT	530632 323-4	26'-11 1/2"	

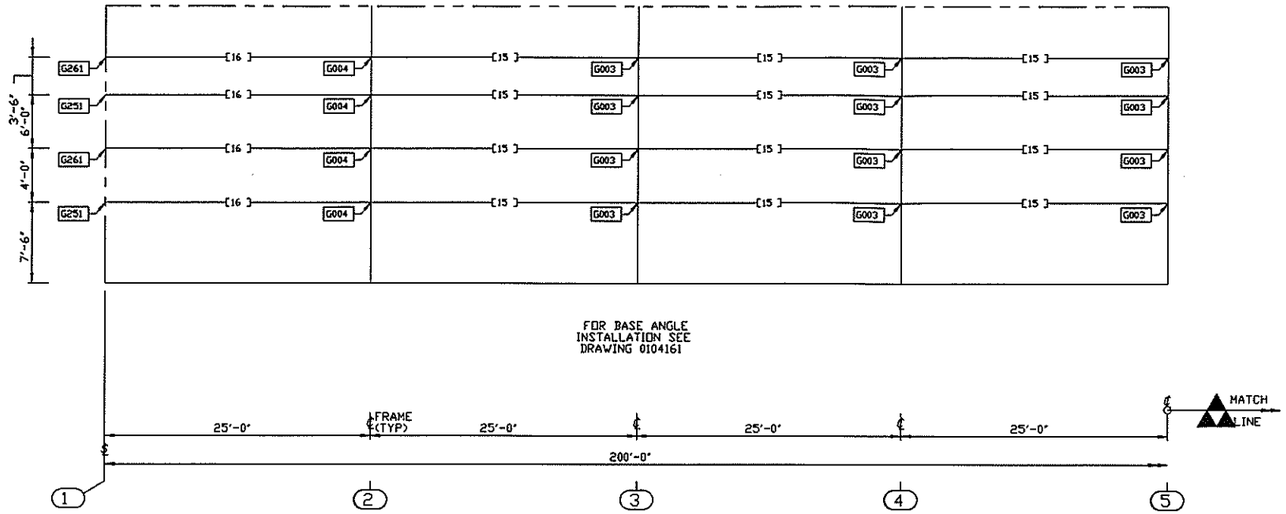

UNIT 1 RIGHT SW STRUCTURAL ELEVATION AT GRID E

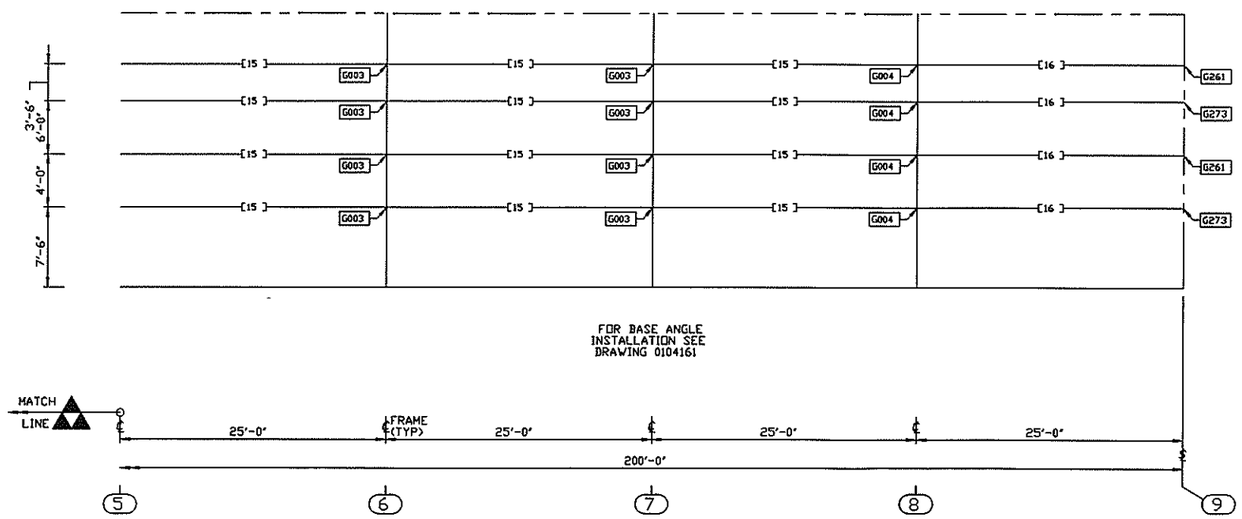

UNIT 1 RIGHT SW STRUCTURAL ELEVATION AT GRID E

COMMONWEALTH OF VIRGINIA
JOHN ERNEST LAMB
018906
1/30/97
PROFESSIONAL ENGINEER

REVISION NO. 1	REVISION NO. 2							
DATE:	DATE:	BUTLER MANUFACTURING COMPANY GENERAL OFFICES-KANSAS CITY, MISSOURI	PRODUCT OF THE PRONTO® ORDER ENGINEERING SYSTEM	BUILDER: COLEMAN-ADAMS CONSTRUCTION CO. FOREST, VA	PROJECT: N.T.S. MARKETING LYNCHBURG, VA	BUILDING ORDER DESCRIPTION: 100X200X26 MRF 20# Roof SL + 5#CLL 80 MPH EXP. B NBC 93	DRAWING TITLE: WALL SECONDARY STRUCTURAL ELEVATION	AG FILE NO:
DRAWN BY:	DRAWN BY:							GROUP: L / DATE: 01/24/97
CHECKED BY:	CHECKED BY:							DRAWING NUMBER: D97-087949-05A / REV. 00

PART SCHEDULE				
[ ]	PART NAME	PART NUMBER	PART LENGTH	FIELD WORK ▲
15	PURLIN / GIRT	530629 323-4	26'-11 1/2"	
16	PURLIN / GIRT	530632 323-4	26'-11 1/2"	

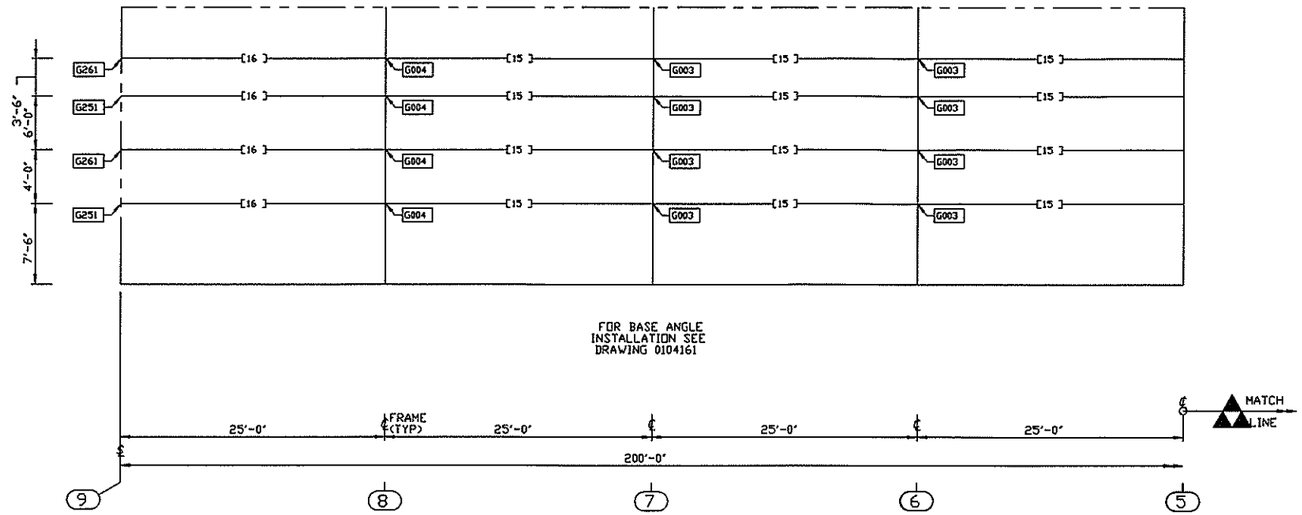

UNIT 1 LEFT SW STRUCTURAL ELEVATION AT GRID A

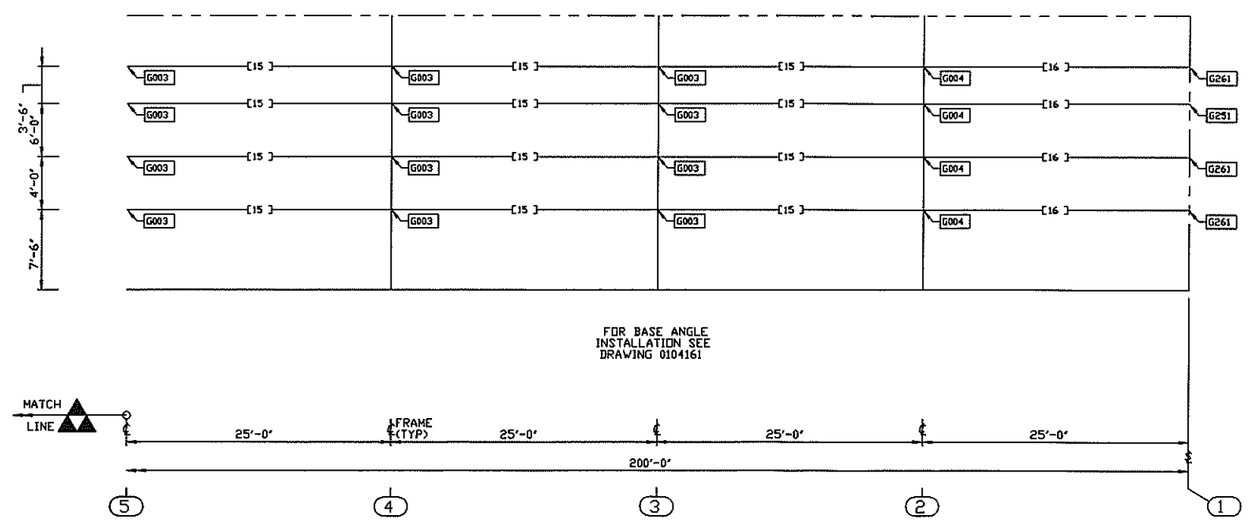

UNIT 1 LEFT SW STRUCTURAL ELEVATION AT GRID A

COMMONWEALTH OF VIRGINIA
JOHN ERNEST LAMB
018906
1/30/97
PROFESSIONAL ENGINEER

REVISION NO. 1		REVISION NO. 2								
DATE:		DATE:		BUTLER MANUFACTURING COMPANY GENERAL OFFICES-KANSAS CITY, MISSOURI	PRODUCT OF THE PRONTO® ORDER ENGINEERING SYSTEM	BUILDER: COLEMAN-ADAMS CONSTRUCTION CO. FOREST, VA	PROJECT: N.T.S. MARKETING LYNCHBURG, VA	BUILDING ORDER DESCRIPTION: 100X200X26 MRF 20# Roof SL + 5#CLL 80 MPH EXP B NBC 93	DRAWING TITLE: WALL SECONDARY STRUCTURAL ELEVATION	AG FILE NO:
DRAWN BY:		DRAWN BY:								GROUP: L / DATE: 01/24/97
CHECKED BY:		CHECKED BY:								DRAWING NUMBER: D97-087949-05B / REV. 00

PART SCHEDULE				
[ ]	PART NAME	PART NUMBER	PART LENGTH	FIELD WORK ▲
20	GIRT	550302 271-2	22'-7 1/4"	
21	GIRT	550302 289-2	24'-1 1/4"	
26	DOOR HEADER	580123	17'-11 1/2"	2
27	DOOR POST	580263	8'-11 7/16"	1
32	(2) DOOR HEADER	580629	23'-11 1/2"	3
33	(2) DOOR HEADER	580637	24'-11 1/2"	4

FIELD WORK SCHEDULE				
▲	DETAIL	FIELD WORK DIMENSIONS		
1	X042	A = 7'-6 7/16"	B = 1'-5"	C = 7/8"
		D = 1 1/2"		
2	X026	A = 15'-11 1/2"	B = 2'-0"	
3	X055	A = 22'-6 1/8"	B = 1'-5 3/8"	C = 2"
		D = 7/8"	E = 3"	F = 3"
4	X027	A = 5 3/8"	B = 24'-0 3/4"	C = 5 3/8"
		D = 3"	E = 7/8"	F = 7/8"

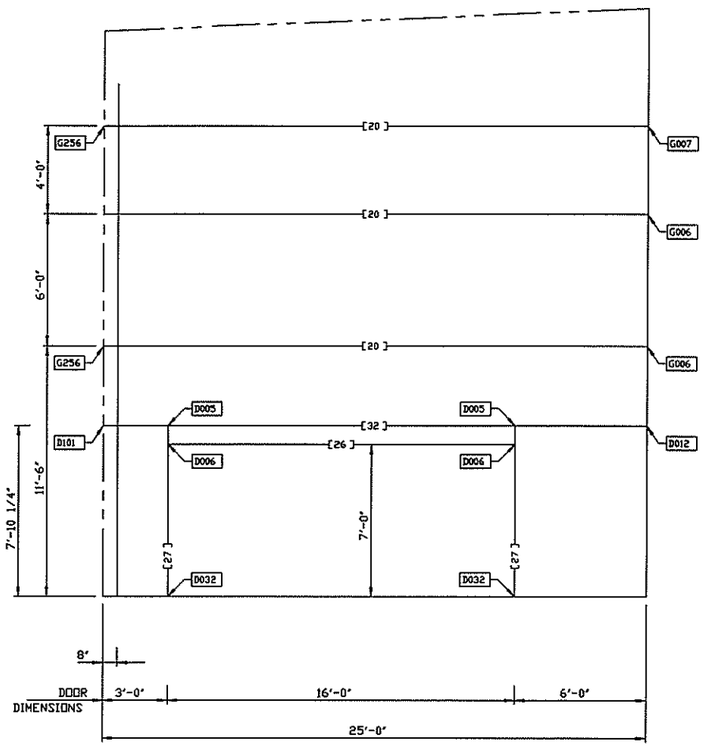

CLOSE-UP #1

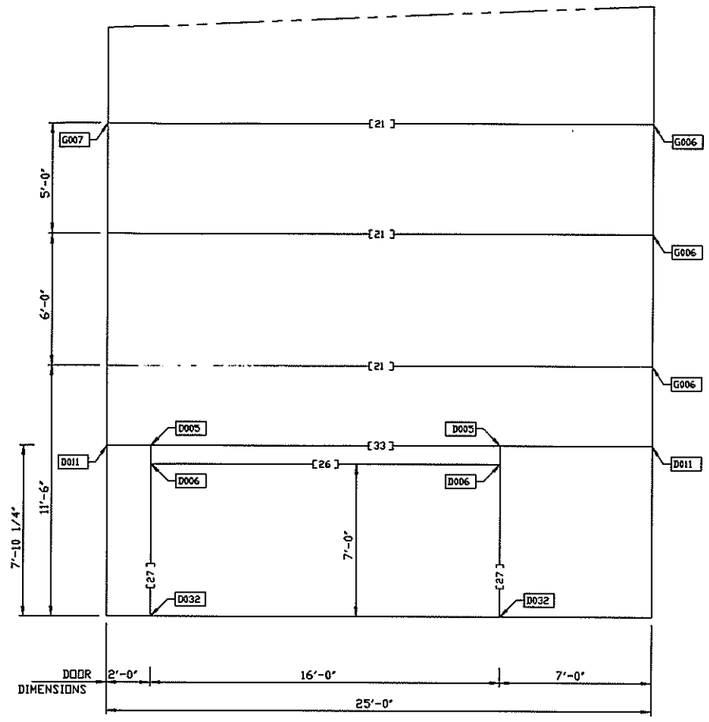

CLOSE-UP #2

COMMONWEALTH OF VIRGINIA
JOHN ERNEST LAMB
018006
1/30/97
PROFESSIONAL ENGINEER

REVISION NO. 1		REVISION NO. 2								
DATE:		DATE:		BUTLER MANUFACTURING COMPANY GENERAL OFFICES-KANSAS CITY, MISSOURI	PRODUCT OF THE PRONTO® ORDER ENGINEERING SYSTEM	BUILDER: COLEMAN-ADAMS CONSTRUCTION CO. FOREST, VA	PROJECT: N.T.S. MARKETING LYNCHBURG, VA	BUILDING ORDER DESCRIPTION: 100X200X26 MRF 20# Roof SL + 5#CLL 80 MPH EXP B NBC 93	DRAWING TITLE: DOOR DETAIL DRAWING	AG FILE NO:
DRAWN BY:		DRAWN BY:								GROUP: L / DATE: 01/24/97
CHECKED BY:		CHECKED BY:								DRAWING NUMBER: D97-087949-05C / REV. 00

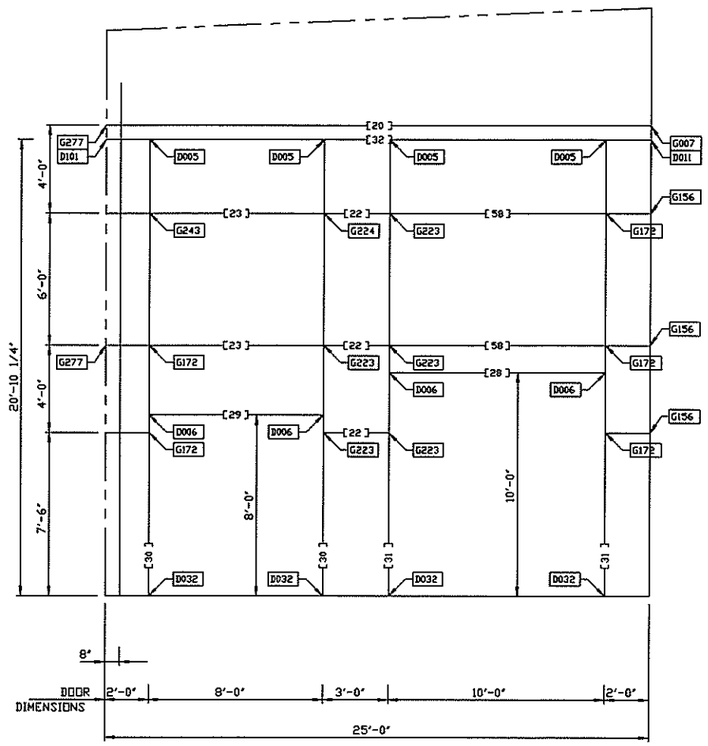

CLOSE-UP #3

PART SCHEDULE					
[ ]	QTY	PART NAME	PART NUMBER	PART LENGTH	FIELD WORK △
20	1	GIRT	0550302 271-2	22'-7 1/4"	
22	3	GIRT	0550303 025-2	2'-1 1/4"	
23	2	GIRT	0550303 085-2	7'-1 1/4"	
28	1	DOOR HEADER	0580273	9'-11 1/2"	
29	1	DOOR HEADER	0580273	9'-11 1/2"	7
30	2	DOOR POST	0580402	21'-0 7/16"	5
31	2	DOOR POST	0580402	21'-0 7/16"	6
32	2	(2) DOOR HEADER	0580629	23'-11 1/2"	3
58	2	GIRT	0550303 109-2	9'-1 1/4"	

FIELD WORK SCHEDULE				
▲	DETAIL	FIELD WORK DIMENSIONS		
3	X055	A = 22'-6 1/8"	B = 1'-5 3/8"	C = 2"
		D = 7/8"	E = 3"	F = 3"
5	X042	A = 20'-6 7/16"	B = 6"	C = 7/8"
		D = 1 1/2"		
6	X044	A = 20'-6 7/16"	B = 6"	C = 7/8"
		D = 20'-1 1/16"	E = 1 1/2"	
7	X026	A = 7'-11 1/2"	B = 2'-0"	

COMMONWEALTH OF VIRGINIA
JOHN ERNEST LAMB
018906
1/30/97
PROFESSIONAL ENGINEER

REVISION NO. 1		REVISION NO. 2	
DATE:		DATE:	
DRAWN BY:		DRAWN BY:	
CHECKED BY:		CHECKED BY:	

BUTLER MANUFACTURING COMPANY
GENERAL OFFICES-KANSAS CITY, MISSOURI

PRODUCT OF THE PRONTO® ORDER ENGINEERING SYSTEM

BUILDER: COLEMAN-ADAMS CONSTRUCTION CO. FOREST, VA

PROJECT: N.T.S. MARKETING LYNCHBURG, VA

BUILDING ORDER DESCRIPTION: 100X200X26 MRF 20# Roof SL + 5#CLL 80 MPH EXP B NBC 93

DRAWING TITLE: DOOR DETAIL DRAWING

GROUP: L

AG FILE NO:

DATE: 01/24/97

DRAWING NUMBER: D97-087949-05D

REV. 00

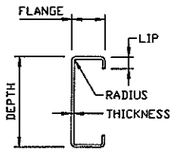

C - SECTION DESIGN INFORMATION

PART	DEPTH	FLANGE	LIP	THICKNESS	RADIUS
DOOR HEADER 580123	9"	3 1/2"	13/16"	.062"	5/16"
DOOR HEADER 580273	9"	3 1/2"	3/4"	.062"	5/16"
DOOR HEADER 580629	8"	3 1/2"	1 3/8"	.100"	5/16"
DOOR HEADER 580637	8"	3 1/2"	1 3/8"	.100"	5/16"
DOOR POST 580263	9"	3 1/2"	13/16"	.062"	5/16"
DOOR POST 580402	9"	3 1/2"	5/16"	.122"	5/16"

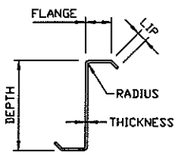

Z - SECTION DESIGN INFORMATION

PART	DEPTH	FLANGE	LIP	THICKNESS	RADIUS
GIRT 550302 271-2	9 1/2"	2 3/4"	1 1/4"	.120"	1/4"
GIRT 550302 289-2	9 1/2"	2 3/4"	1 1/4"	.120"	1/4"
GIRT 550303 025-2	9 1/2"	2 3/4"	1 1/16"	.060"	1/8"
GIRT 550303 085-2	9 1/2"	2 3/4"	1 1/16"	.060"	1/8"
GIRT 550303 109-2	9 1/2"	2 3/4"	1 1/16"	.060"	1/8"
PURLIN / GIRT 530629 323-4	8"	2 5/8"	3/4"	.060"	1/4"
PURLIN / GIRT 530632 323-4	8"	2 5/8"	1 1/8"	.083"	1/4"

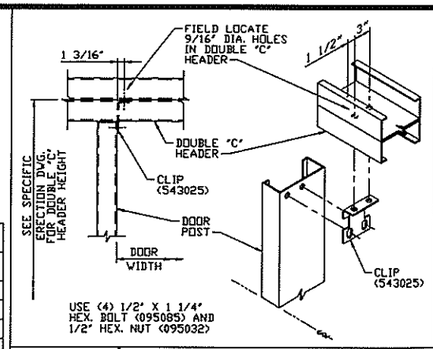

DETAIL D005 — DOOR POST TO DOUBLE "C" HEADER

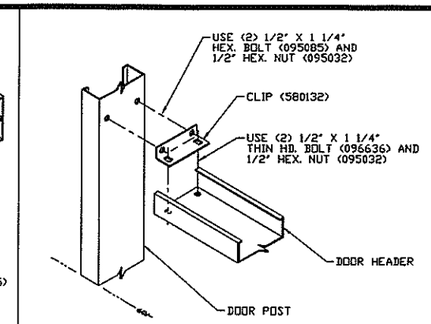

DETAIL D006 — DOOR HEADER TO DOOR POST

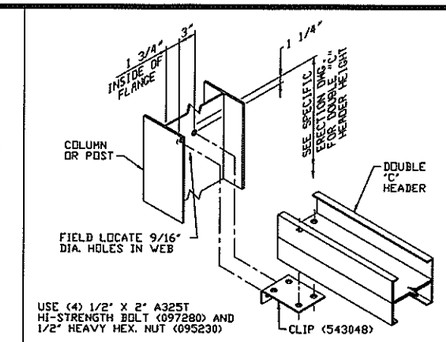

DETAIL D011 — DOUBLE "C" HEADER TO COLUMN OR POST
ONE HEADER CONNECTION

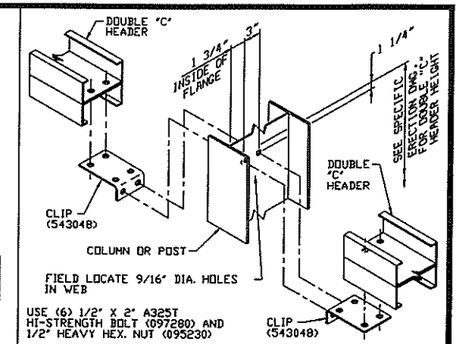

DETAIL D012 — DOUBLE "C" HEADER TO COLUMN OR POST
TWO HEADER CONNECTION

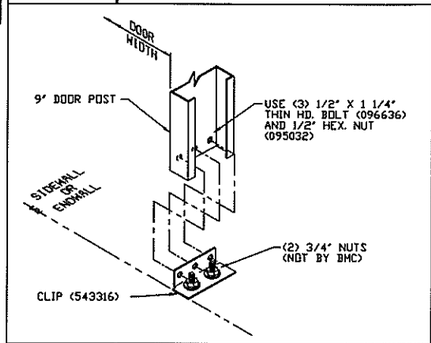

DETAIL D032 — DOOR POST BASE CLIP CONNECTION
9" DOOR POST

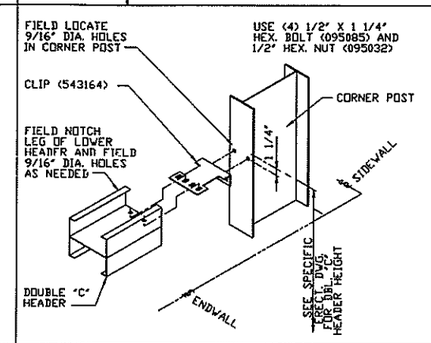

DETAIL D101 — EW DBL. "C" HDR. TO CNR. POST AT
6" SETBACK EW & 1" OR 8" SETBACK SW

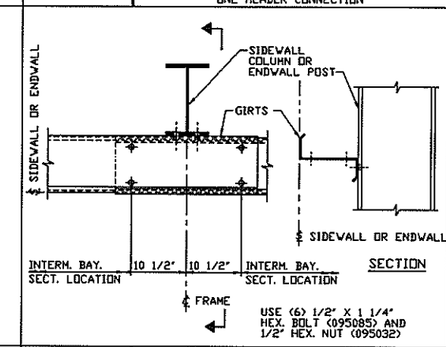

DETAIL G003 — CONTINUOUS SPAN GIRT CONNECTION
INTERMEDIATE BAY OR SECTION LOCATION

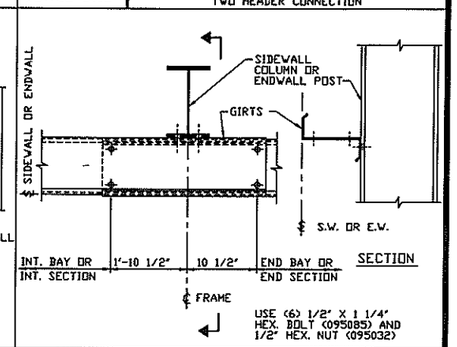

DETAIL G004 — CONTINUOUS SPAN GIRT CONNECTION
END BAY OR SECTION LOCATION

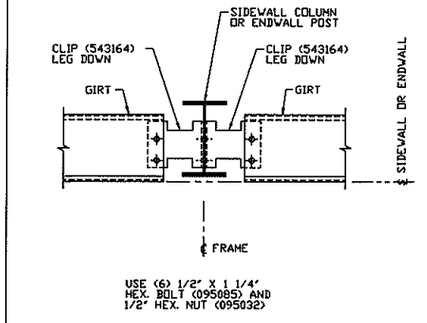

DETAIL G006 — DOUBLE GIRT TO COLUMN CONN.

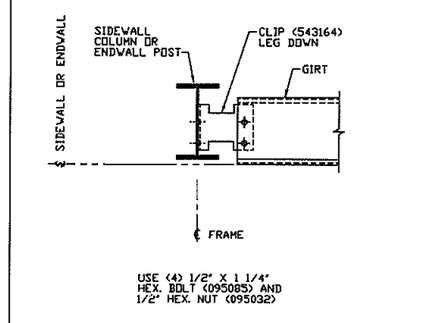

DETAIL G007 — SINGLE GIRT TO COLUMN CONN.

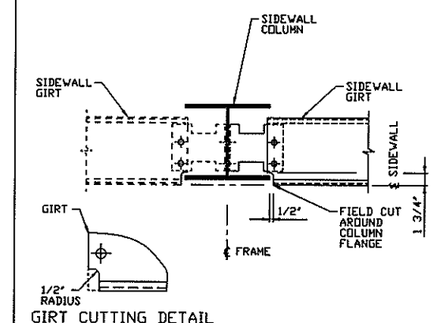

DETAIL G019 — FIELD WORK SIDEWALL GIRT
COLUMN FLANGES WIDER THAN 10"

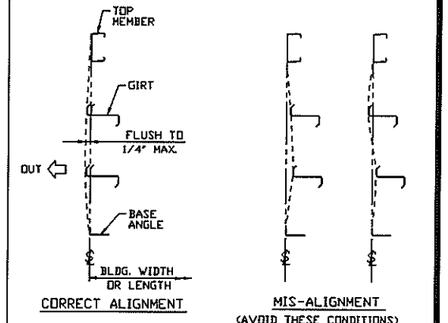

DETAIL G047 — SECONDARY STRUCTURAL ALIGNMENT

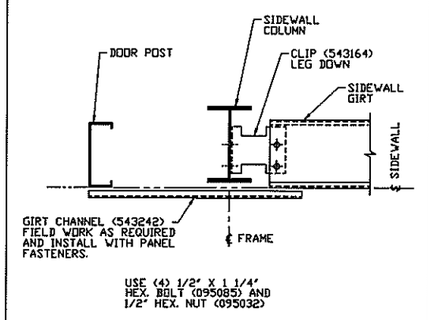

DETAIL G156 — SINGLE GIRT TO SIDEWALL COLUMN CONN.
INTERM. BAY LOCATION - W/ ADJ. DOOR POST

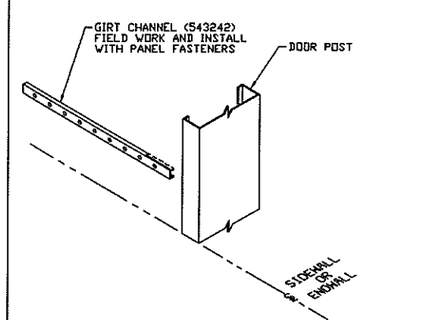

DETAIL G172 — GIRT CHANNEL TO DOOR POST CONNECTION

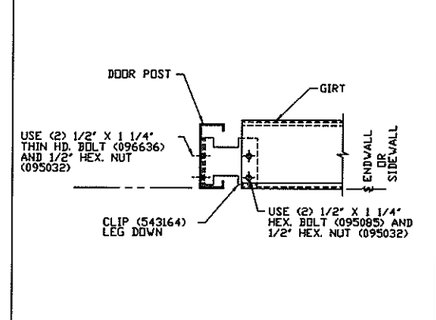

DETAIL G223 — SINGLE GIRT TO DOOR POST CONNECTION

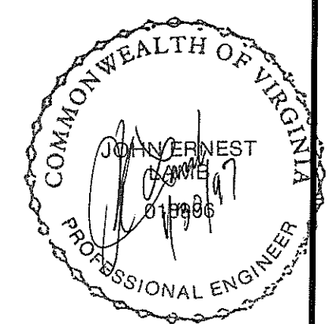

REVISION NO. 1		REVISION NO. 2	
DATE:		DATE:	
DRAWN BY:		DRAWN BY:	
CHECKED BY:		CHECKED BY:	

BUTLER MANUFACTURING COMPANY
GENERAL OFFICES-KANSAS CITY, MISSOURI

PRODUCT OF THE PRONTO® ORDER ENGINEERING SYSTEM

BUILDER:	PROJECT:	BUILDING ORDER DESCRIPTION:	DRAWING TITLE:	AG FILE NO:
COLEMAN-ADAMS CONSTRUCTION CO. FOREST, VA	N.T.S. MARKETING LYNCHBURG, VA	100X200X26 MRF 20# Roof SL + 5#CLL 80 MPH EXP B NBC 93	WALL SECONDARY STRUCTURAL ELEVATION DETAIL SHEET	GROUP: L / DATE: 01/24/97
			DRAWING NUMBER: D97-087949-05E	REV. 00

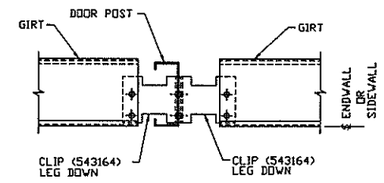

USE (6) 1/2" X 1 1/4" HEX. BOLT (095085) AND 1/2" HEX. NUT (095032)

DETAIL G224 | DOUBLE GIRT TO DOOR POST CONNECTION

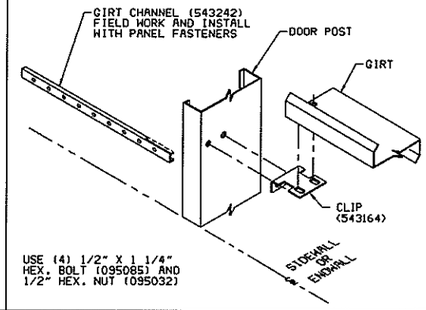

USE (4) 1/2" X 1 1/4" HEX. BOLT (095085) AND 1/2" HEX. NUT (095032)

DETAIL G243 | GIRT & GIRT CHNL. TO DOOR POST CONN.

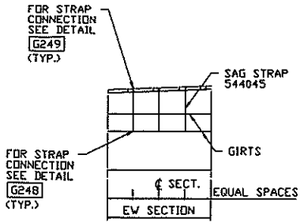

INSTALL (3) ROWS OF SAG STRAPS IN EACH ENDWALL SECTION.

DETAIL G246 | SAG STRAP PLACEMENT IN THE ENDWALL

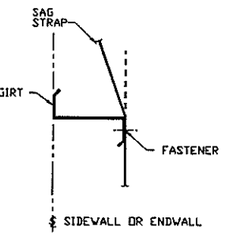

SAG STRAP IS FURNISHED 20' LONG AND MUST BE FIELD CUT TO LENGTH REQUIRED. ATTACH SAG STRAP TO THE GIRT WITH SELF DRILLING SCREW 097216. SPLICE SAG STRAPS AT GIRT LOCATIONS IF NECESSARY.

DETAIL G248 | SAG STRAP TO GIRT CONNECTION

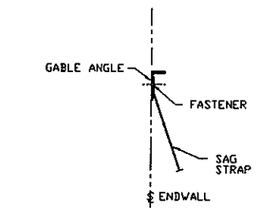

ATTACH SAG STRAP TO THE GABLE ANGLE WITH SELF DRILLING SCREW 097216.

DETAIL G249 | SAG STRAP TO GABLE ANGLE CONNECTION

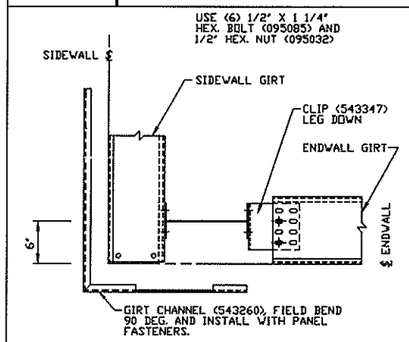

DETAIL G251 | 8' SW & 9 1/2' EW GIRTS TO CORNER POST 6' SETBACK ENDWALL

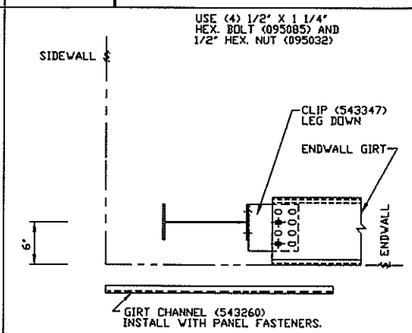

DETAIL G256 | 9 1/2' GIRT TO CORNER POST 6' SETBACK ENDWALL

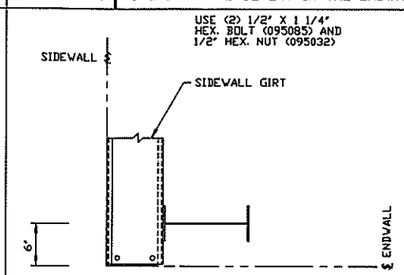

DETAIL G261 | 8' SW GIRT TO H-SECT. CNR. POST 6' SETBACK ENDWALL

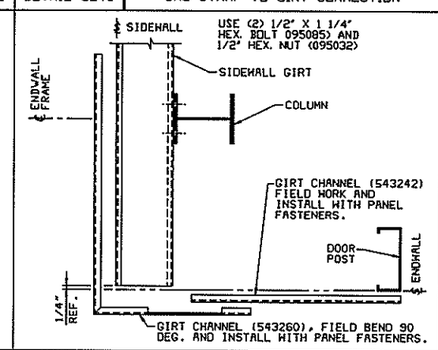

DETAIL G273 | SW GIRT TO ENDWALL DOOR POST CONN. ENDWALL FR. EW-W/ADJ. EW DOOR POST-8' SW GIRT

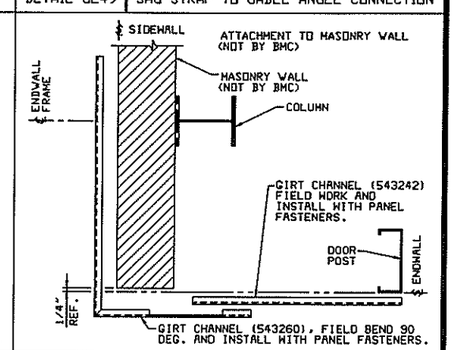

DETAIL G277 | SW GIRT TO ENDWALL DOOR POST CONN. ENDWALL FR. EW-W/ADJ. EW DOOR POST-8' SW GIRT

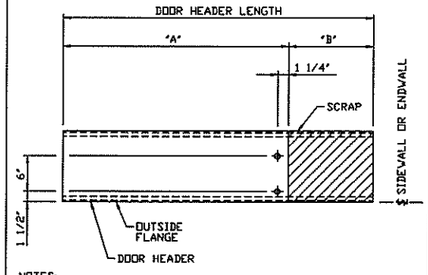

NOTES:
1. FIELD CUT DOOR HEADER AND LOCATE 9/16" DIA. HOLES AS SHOWN.
2. SEE "FIELD WORK SCHEDULE" FOR DIMENSIONS.

DETAIL X026 | FIELD WORK DOOR HEADER

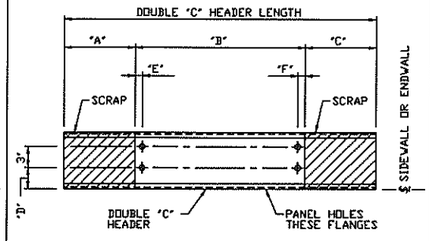

NOTES:
1. FIELD CUT DOUBLE "C" HEADER AND LOCATE 9/16" DIA. HOLES AS SHOWN.
2. SEE "FIELD WORK SCHEDULE" FOR DIMENSIONS.

DETAIL X027 | FIELD WORK DOUBLE "C" HEADER

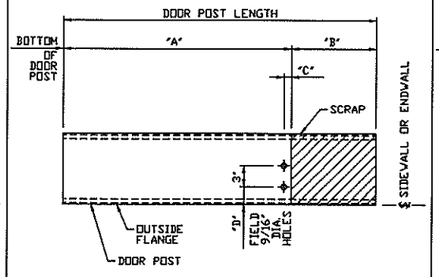

NOTES:
1. FIELD CUT DOOR POST AND LOCATE HOLES AS SHOWN.
2. SEE "FIELD WORK SCHEDULE" FOR DIMENSIONS.

DETAIL X042 | FIELD WORK DOOR POST

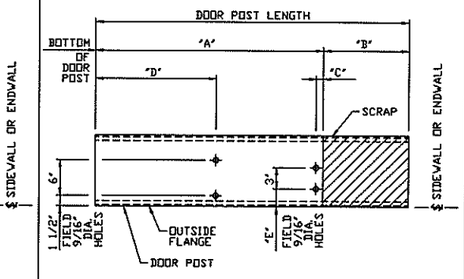

NOTES:
1. FIELD CUT DOOR POST AND LOCATE HOLES AS SHOWN.
2. SEE "FIELD WORK SCHEDULE" FOR DIMENSIONS.

DETAIL X044 | FIELD WORK DOOR POST

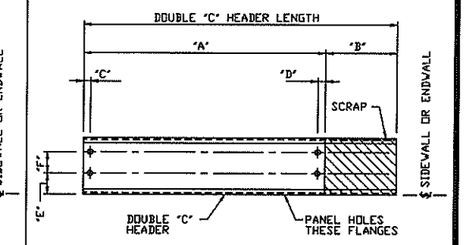

NOTES:
1. FIELD CUT DOUBLE "C" HEADER AND LOCATE 9/16" DIA. HOLES AS SHOWN.
2. SEE "FIELD WORK SCHEDULE" FOR DIMENSIONS.

DETAIL X055 | FIELD WORK DOUBLE "C" HEADER

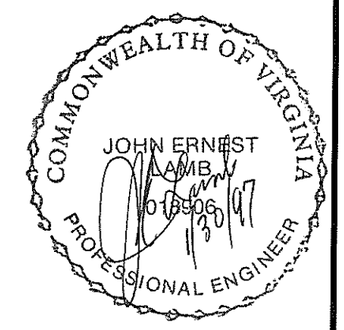

REVISION NO. 1		REVISION NO. 2									
DATE:		DATE:		BUTLER MANUFACTURING COMPANY, GENERAL OFFICES-KANSAS CITY, MISSOURI	PRODUCT OF THE PRONTO® ORDER ENGINEERING SYSTEM	BUILDER: COLEMAN-ADAMS CONSTRUCTION CO. FOREST, VA	PROJECT: N.T.S. MARKETING LYNCHBURG, VA	BUILDING ORDER DESCRIPTION: 100X200X26 MRF 20# Roof SL + 5#CLL 80 MPH EXP B NBC 93	DRAWING TITLE: WALL SECONDARY STRUCTURAL ELEVATION DETAIL SHEET		AG FILE NO:
DRAWN BY:		DRAWN BY:								GROUP: L	DATE: 01/24/97
CHECKED BY:		CHECKED BY:								DRAWING NUMBER: D97-087949-05F	REV. 00

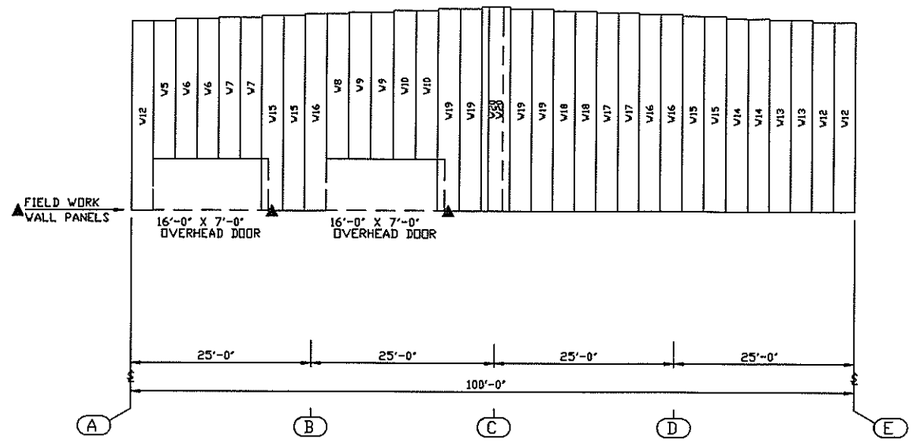

FRONT ENDWALL PANELING ELEVATION
AT GRID 1

WALL PANEL SCHEDULE					
ID	PART NUMBER	EXT. SUFF.	INT. SUFF.	LENGTH	DESCRIPTION
W5	027095	864		225-1	BRII HDR SQ PNL STONE WH
W6	027095	864		228-1	BRII HDR SQ PNL STONE WH
W7	027095	864		231-1	BRII HDR SQ PNL STONE WH
W8	027095	864		237-1	BRII HDR SQ PNL STONE WH
W9	027095	864		240-1	BRII HDR SQ PNL STONE WH
W10	027095	864		243-1	BRII HDR SQ PNL STONE WH
W11	027162	864		309-6	BRII SQ PNL STONE WH
W12	027162	864		310-0	BRII SQ PNL STONE WH
W13	027162	864		313-0	BRII SQ PNL STONE WH
W14	027162	864		316-0	BRII SQ PNL STONE WH
W15	027162	864		319-0	BRII SQ PNL STONE WH
W16	027162	864		322-0	BRII SQ PNL STONE WH
W17	027162	864		325-0	BRII SQ PNL STONE WH
W18	027162	864		328-0	BRII SQ PNL STONE WH
W19	027162	864		331-0	BRII SQ PNL STONE WH
W20	027162	864		334-0	BRII SQ PNL STONE WH

STANDARD NOTES:

WP0010 INSTALL OVERHEAD DOOR TRIM FOR BRII WALL PANELS PER DRAWING 104219

WP0014 BRII WALL PANEL-TO-PANEL FASTENERS ARE 097364 (1/4 X 3/4 T-30 TORX SELF DRILLING SCREW).

WP0018 BRII WALL PANEL-TO-STRUCTURAL TOP/BASE FASTENERS ARE 097362 (11/32 X 1 1/2 T-45 TORX SCRUBOLT).

WP0028 FOR GENERAL BRII WALL PNL INFO. REFER TO THE FOLLOWING DWGS :

104217 - GENERAL PANELING INFORMATION
105017 - INSULATION AT TOP OF WALL-SIDEWALL
105018 - INSULATION AT TOP OF WALL-ENDWALL
1080854 - WALL PANEL LENGTH CALCULATIONS
1080873 - GENERAL INSTALLATION TORX FASTENERS

WP0030 THE DIRECTION OF ERECTION FOR BUTLERIB II WALL PANEL IS LEFT-TO-RIGHT.

IMPORTANT APPEARANCE ITEM
****
FIELD TRIM INSULATION SO THAT THERE IS MAXIMUM OF 3" THICKNESS BETWEEN STRUCTURALS AND FLAT SURFACE OF WALL PANEL. WHEN TRIMMING INSULATION, BE CAREFUL NOT TO CUT VAPOR RETARDER.

WP0074 BRII WALL PANEL-TO-GIRT FASTENERS ARE 097362 (11/32 X 1 1/2 T-45 TORX SCRUBOLT).

UNPUNCHED DOOR SIDE GIRTS REQUIRE FIELD DRILLED 5/16" HOLES.

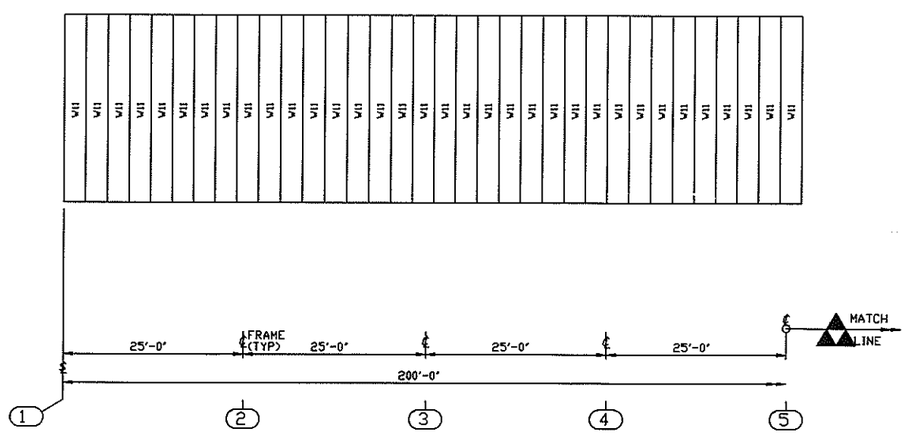

RIGHT SIDEWALL PANELING ELEVATION
AT GRID E

COMMONWEALTH OF VIRGINIA
JOHN ERNEST LAMB
018906
1/30/97
PROFESSIONAL ENGINEER

REVISION NO. 1		REVISION NO. 2								
DATE:		DATE:		BUTLER MANUFACTURING COMPANY GENERAL OFFICES-KANSAS CITY, MISSOURI	PRODUCT OF THE PRONTO® ORDER ENGINEERING SYSTEM	BUILDER: COLEMAN-ADAMS CONSTRUCTION CO. FOREST, VA	PROJECT: N.T.S. MARKETING LYNCHBURG, VA	BUILDING ORDER DESCRIPTION: 100X200X26 MRF 20# Roof SL + 5#CLL 80 MPH EXP B NBC 93	DRAWING TITLE: WALL PANEL DRAWING	AG FILE NO:
DRAWN BY:		DRAWN BY:								GROUP: L / DATE: 01/24/97
CHECKED BY:		CHECKED BY:								DRAWING NUMBER: D97-087949-06 / REV. 00

WALL PANEL SCHEDULE					
ID	PART NUMBER	EXT. SUFF.	INT. SUFF.	LENGTH	DESCRIPTION
W1	027095	864		195-1	BRII HDR SQ PNL STONE WH
W2	027095	864		198-1	BRII HDR SQ PNL STONE WH
W3	027095	864		213-1	BRII HDR SQ PNL STONE WH
W4	027095	864		216-1	BRII HDR SQ PNL STONE WH
W11	027162	864		309-6	BRII SQ PNL STONE WH
W12	027162	864		310-0	BRII SQ PNL STONE WH
W13	027162	864		313-0	BRII SQ PNL STONE WH
W14	027162	864		316-0	BRII SQ PNL STONE WH
W15	027162	864		319-0	BRII SQ PNL STONE WH
W16	027162	864		322-0	BRII SQ PNL STONE WH
W17	027162	864		325-0	BRII SQ PNL STONE WH
W18	027162	864		328-0	BRII SQ PNL STONE WH
W19	027162	864		331-0	BRII SQ PNL STONE WH
W20	027162	864		334-0	BRII SQ PNL STONE WH

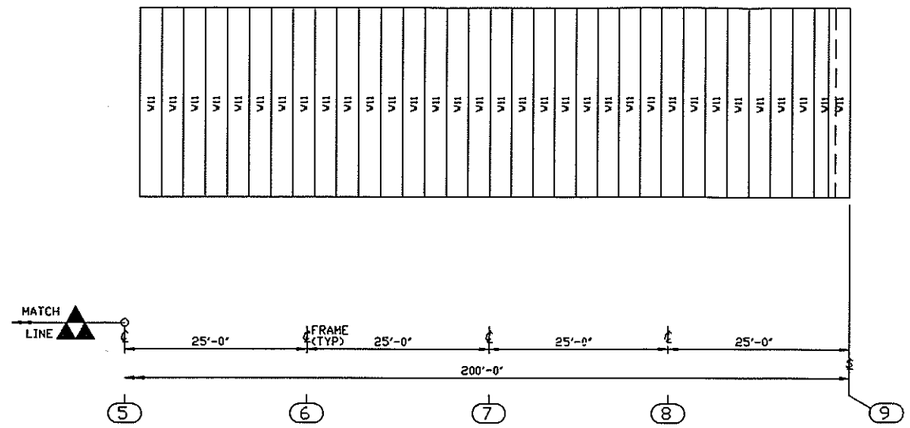

RIGHT SIDEWALL PANELING ELEVATION
AT GRID E

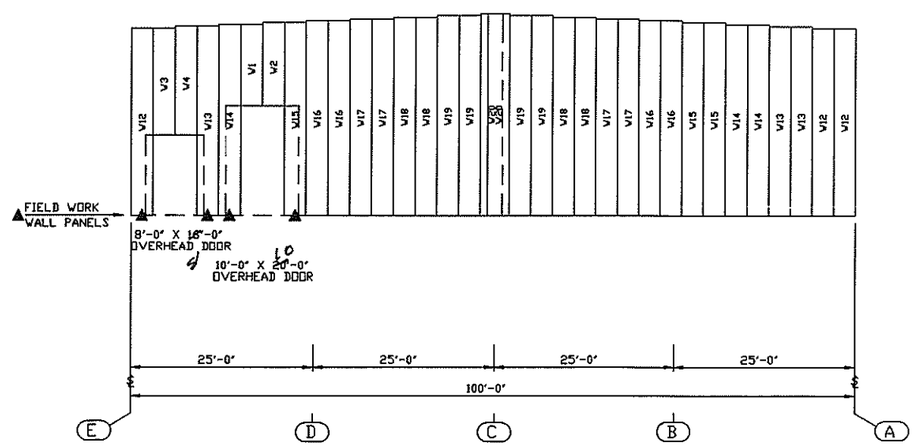

REAR ENDWALL PANELING ELEVATION
AT GRID 9

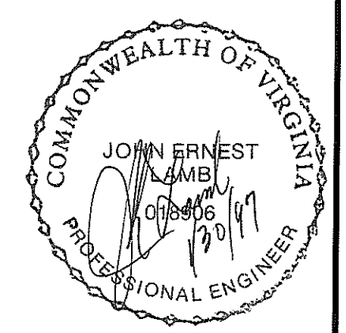

REVISION NO. 1	REVISION NO. 2							
DATE:	DATE:	BUTLER MANUFACTURING COMPANY GENERAL OFFICES-KANSAS CITY, MISSOURI	PRODUCT OF THE PRONTO® ORDER ENGINEERING SYSTEM	BUILDER: COLEMAN-ADAMS CONSTRUCTION CO. FOREST, VA	PROJECT: N.T.S. MARKETING LYNCHBURG, VA	BUILDING ORDER DESCRIPTION: 100X200X26 MRF 20# Roof SL + 5#CLL 80 MPH EXP B NBC 93	DRAWING TITLE: WALL PANEL DRAWING	AG FILE NO:
DRAWN BY:	DRAWN BY:							GROUP: L / DATE: 01/24/97
CHECKED BY:	CHECKED BY:							DRAWING NUMBER: D97-087949-06A / REV. 00

WALL PANEL SCHEDULE					
ID	PART NUMBER	EXT. SUFF.	INT. SUFF.	LENGTH	DESCRIPTION
W11	027162	864		309-6	BRII SO PNL STONE WH

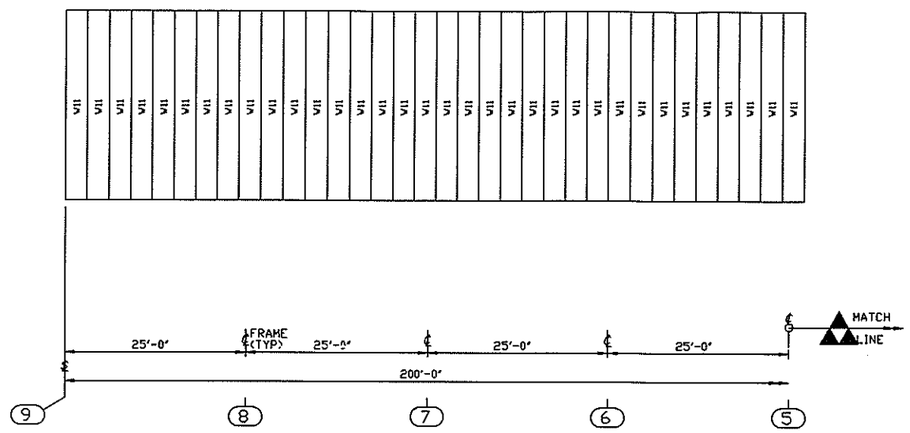

LEFT SIDEWALL PANELING ELEVATION
AT GRID A

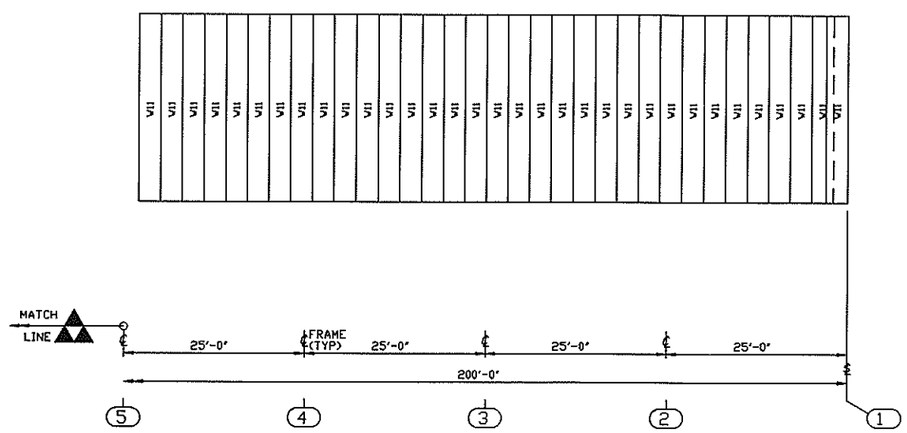

LEFT SIDEWALL PANELING ELEVATION
AT GRID A

COMMONWEALTH OF VIRGINIA
JOHN ERNEST LAMB
018904
1/30/97
PROFESSIONAL ENGINEER

REVISION NO. 1		REVISION NO. 2	
DATE:		DATE:	
DRAWN BY:		DRAWN BY:	
CHECKED BY:		CHECKED BY:	

BUTLER MANUFACTURING COMPANY
GENERAL OFFICES-KANSAS CITY, MISSOURI

PRODUCT OF THE PRONTO® ORDER ENGINEERING SYSTEM

BUILDER:	PROJECT:	BUILDING ORDER DESCRIPTION:	DRAWING TITLE:	AG FILE NO:
COLEMAN-ADAMS CONSTRUCTION CO. FOREST, VA	N.T.S. MARKETING LYNCHBURG, VA	100X200X26 MRF 20# Roof SL + 5#CLL 80 MPH EXP B NBC 93	WALL PANEL DRAWING	GROUP: L / DATE: 01/24/97
			DRAWING NUMBER: D97-087949-06B	REV. 00

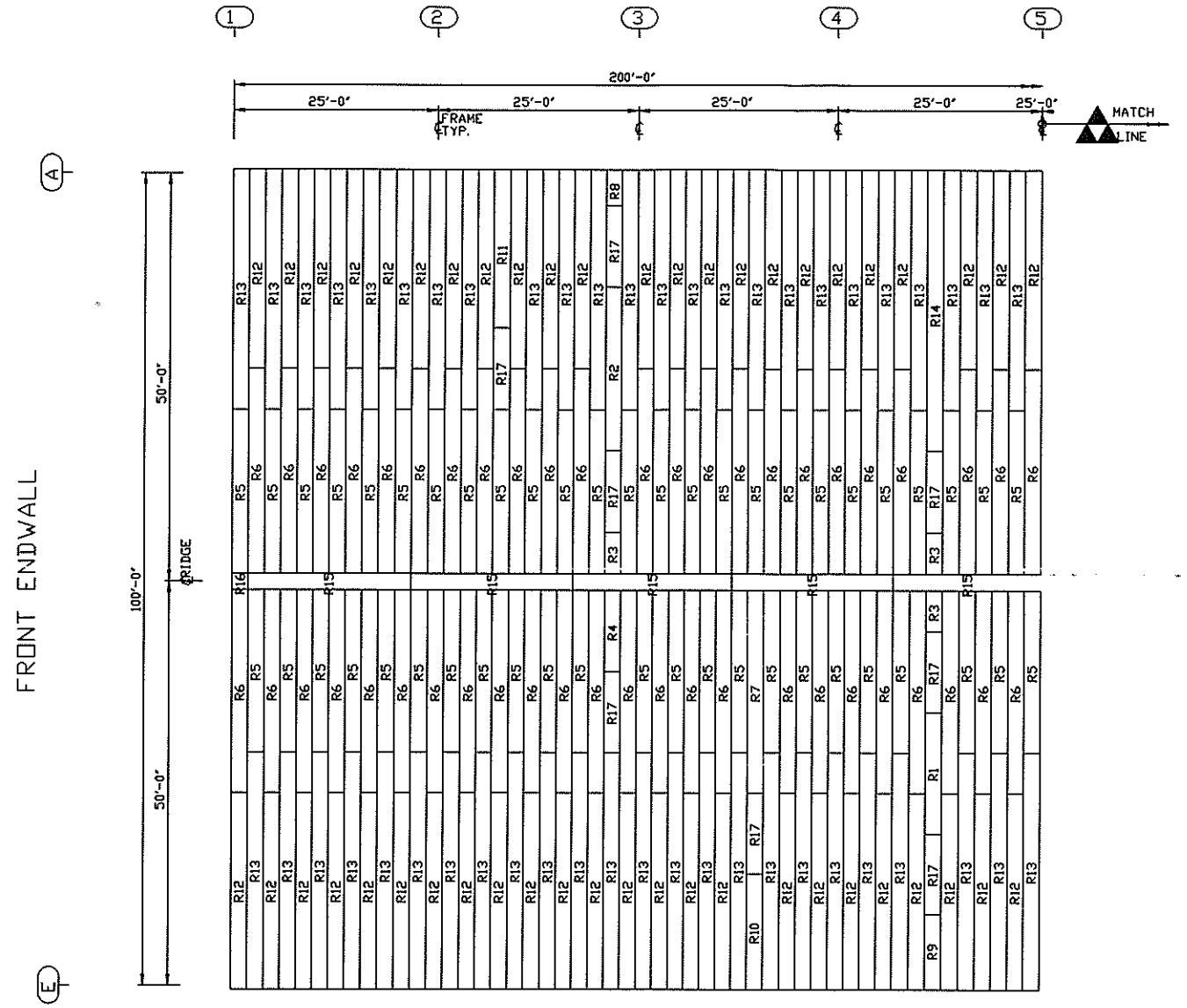

ROOF PANEL SCHEDULE					
ID	PART NUMBER	SUFF.	LENGTH	DESCRIPTION	HOLE TO HOLE
R1	560104	643	186-2	MR24 SPLICE PANEL ALZN	15'-0 5/32"
R2	560104	643	246-2	MR24 SPLICE PANEL ALZN	20'-0 7/32"
R3	560105	643	069-5	MR24 SPLICE PANEL ALZN	5'-0 1/16"
R4	560105	643	129-6	MR24 SPLICE PANEL ALZN	10'-0 3/32"
R5	560105	643	249-6	MR24 SPLICE PANEL ALZN	20'-0 7/32"
R6	560105	643	309-6	MR24 SPLICE PANEL ALZN	25'-0 1/4"
R7	560105	643	309-7	MR24 SPLICE PANEL ALZN	25'-0 1/4"
R8	560118	643	058-4	MR24 EAVE PANEL ALZN	3'-10 15/32"
R9	560118	643	118-4	MR24 EAVE PANEL ALZN	8'-10 1/2"
R10	560118	643	178-5	MR24 EAVE PANEL ALZN	13'-10 9/16"
R11	560118	643	238-5	MR24 EAVE PANEL ALZN	18'-10 5/8"
R12	560118	643	298-5	MR24 EAVE PANEL ALZN	23'-10 21/32"
R13	560118	643	358-6	MR24 EAVE PANEL ALZN	28'-10 23/32"
R14	560118	643	418-7	MR24 EAVE PANEL ALZN	33'-10 25/32"
R15	560157	645		MR24 RIDGE COVER	
R16	560173			MR24 RIDGE END COVER	
R17	560374	390		MR24 LITEXPANL	10'-0 3/32"

STANDARD NOTES:

RP0031 REFER TO GENERAL ROOF INDEX DRAWING 104995 FOR ADDITIONAL ERECTION DRAWING REQUIREMENTS.

REFER TO DRAWING 1080876 AND/OR 1080877 WHEN FIELD WORK IS REQUIRED FOR VARIABLE-WIDTH ROOF PANELS.

RP0038 W A R N I N G
PANELS WITH PROTECTIVE OIL COATING ARE SLIPPERY. PROCEED WITH CAUTION. WIPE CLEAN IF NECESSARY.

RP0039 W A R N I N G
DO NOT STAND ON ROOF PANELS THAT SPAN ONLY ONE PURLIN SPACE. THESE PANELS ARE EASILY DAMAGED AND CAN BE DANGEROUS.

RP0046 PANEL CLIP FASTENERS
USE SCRUBOLT 097196 (GREEN 3/8 X 1) FOR PANEL CLIP-TO-PURLIN CONNECTIONS.

RP0054 DIRECTION OF ERECTION FOR MR-24 PANELS ON LEFT SLOPE IS FRONT TO REAR OF ROOF SURFACE.

RP0055 DIRECTION OF ERECTION FOR MR-24 PANELS ON RIGHT SLOPE IS REAR TO FRONT OF ROOF SURFACE.

RP0059 MR24 RIDGE COVER IS FURNISHED IN 20' LENGTHS. FIELD CUT THE RIDGE COVER TO LENGTH AS REQUIRED.

RP0062 ROOF PANELS MUST BE ATTACHED TO ALL ROOF STRUCTURALS TO INSURE THE STRUCTURAL INTEGRITY OF THE ROOF. THIS INCLUDES ALL PURLINS ADDED FOR SPECIFIC LOADING CONDITIONS, ETC.

ENOUGH PANEL-TO-STRUCTURAL FASTENERS, CLIPS (IF MR-24/CMR-24) HAVE BEEN FURNISHED FOR ALL ROOF STRUCTURALS.

RP0073 HOLE TO HOLE DIMENSION IN THE ROOF PANEL SCHEDULE IS NORMALLY THE DISTANCE BETWEEN THE STRUCTURAL ATTACHMENTS AT EACH END OF ROOF PANEL (SEE DWG 000001). THIS MAY NOT BE TRUE FOR CUSTOM PANEL CONDITIONS.

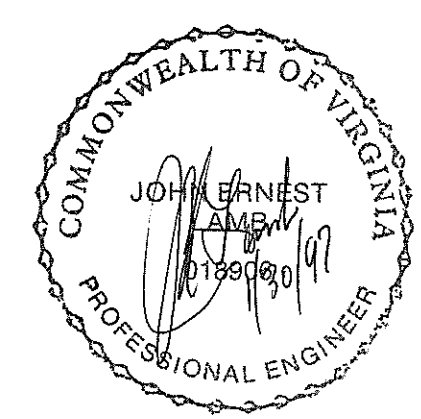

REVISION NO. 1	REVISION NO. 2							
DATE:	DATE:	BUTLER MANUFACTURING COMPANY GENERAL OFFICES-KANSAS CITY, MISSOURI	PRODUCT OF THE PRONTO® ORDER ENGINEERING SYSTEM	BUILDER: COLEMAN-ADAMS CONSTRUCTION CO. FOREST, VA	PROJECT: N.T.S. MARKETING LYNCHBURG, VA	BUILDING ORDER DESCRIPTION: 100X200X26 MRF 20# Roof SL + 5#CLL 80 MPH EXP B NBC 93	DRAWING TITLE: ROOF PANEL DRAWING	AG FILE NO:
DRAWN BY:	DRAWN BY:						GROUP: L	DATE: 01/27/97
CHECKED BY:	CHECKED BY:						DRAWING NUMBER: D97-087949-07	REV. 00

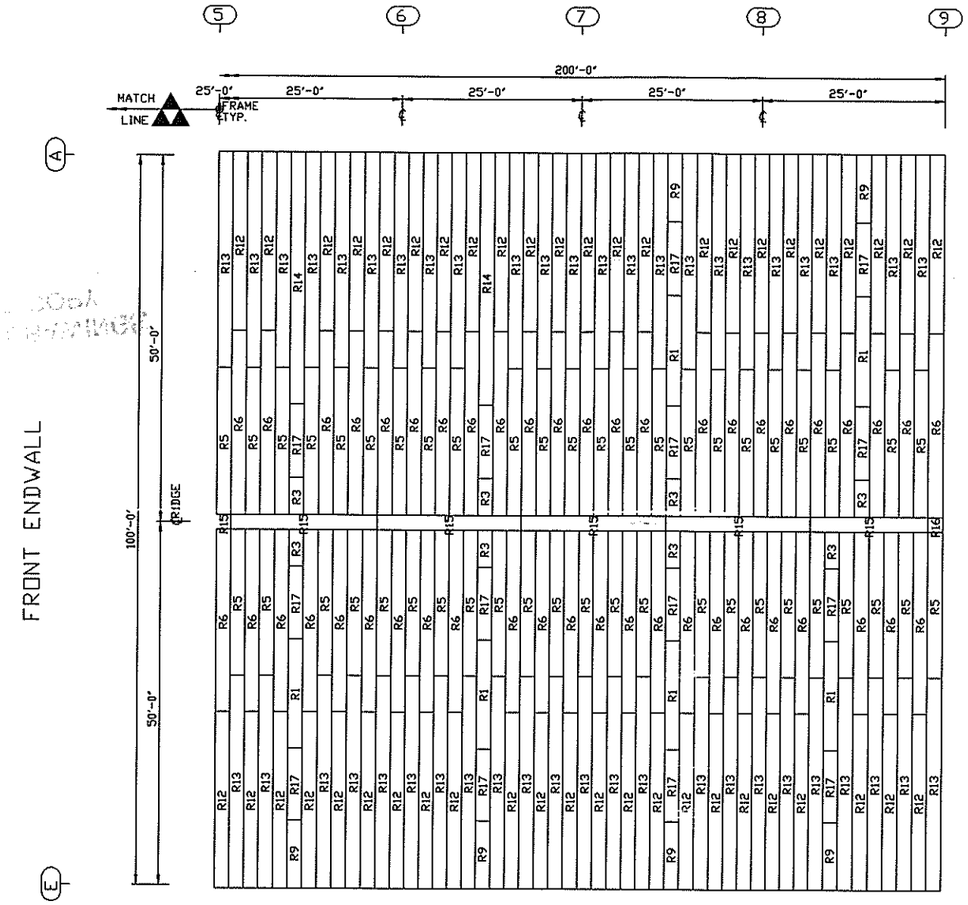

ROOF PANEL SCHEDULE					
ID	PART NUMBER	SUFF.	LENGTH	DESCRIPTION	HOLE TO HOLE
R1	560104	643	186-2	MR24 SPLICE PANEL ALZN	15'-0 5/32"
R3	560105	643	069-5	MR24 SPLICE PANEL ALZN	5'-0 1/16"
R5	560105	643	249-6	MR24 SPLICE PANEL ALZN	20'-0 7/32"
R6	560105	643	309-6	MR24 SPLICE PANEL ALZN	25'-0 1/4"
R9	560118	643	118-4	MR24 EAVE PANEL ALZN	8'-10 1/2"
R12	560118	643	298-5	MR24 EAVE PANEL ALZN	23'-10 21/32"
R13	560118	643	358-6	MR24 EAVE PANEL ALZN	28'-10 23/32"
R14	560118	643	418-7	MR24 EAVE PANEL ALZN	33'-10 25/32"
R15	560157	645		MR24 RIDGE COVER	
R16	560173			MR24 RIDGE END COVER	
R17	560374	390		MR24 LITE*PANL	10'-0 3/32"

COMMONWEALTH OF VIRGINIA
JOHN ERNEST LAMB
018906
1/30/97
PROFESSIONAL ENGINEER

REVISION NO. 1		REVISION NO. 2	
DATE:		DATE:	
DRAWN BY:		DRAWN BY:	
CHECKED BY:		CHECKED BY:	

BUTLER MANUFACTURING COMPANY
GENERAL OFFICES-KANSAS CITY, MISSOURI

PRODUCT OF THE PRONTO® ORDER ENGINEERING SYSTEM

BUILDER: COLEMAN-ADAMS CONSTRUCTION CO. FOREST, VA

PROJECT: N.T.S. MARKETING LYNCHBURG, VA

BUILDING ORDER DESCRIPTION: 100X200X26 MRF 20# Roof SL + 5#CLL 80 MPH EXP B NBC 93

DRAWING TITLE: ROOF PANEL DRAWING

GROUP: L

AG FILE NO:

DATE: 01/27/97

DRAWING NUMBER: D97-087949-07A

REV. 00