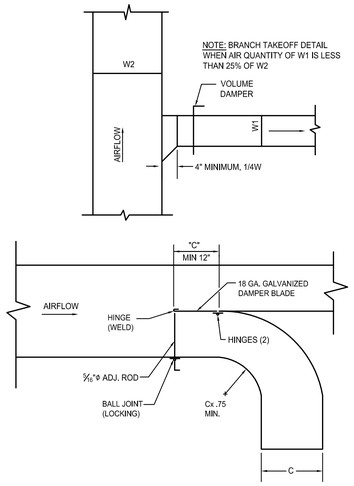

NOTE: BRANCH TAKEOFF DETAIL WHEN AIR QUANTITY OF W1 IS LESS THAN 25% OF W2

1 DUCTWORK BRANCH TAKE-OFF DETAIL
SCALE: NOT TO SCALE

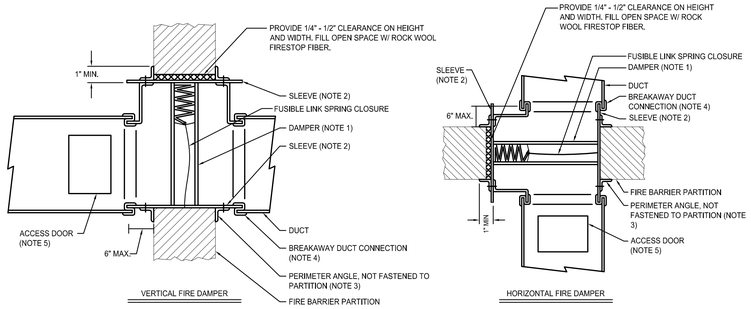

NOTES:
1. FOLLOW DAMPER MANUFACTURERS INSTRUCTIONS, INCLUDING FASTENERS, OPTIONS, AND GAGES FOR SLEEVE AND PERIMETER ANGLES. FIRE DAMPERS MUST BE INSTALLED IN THE PARTITION, NOT OUTSIDE THE PENETRATION.
2. GALVANIZED SLEEVE: GAGE NOT LESS THAN THE CONNECTING DUCT. FASTEN SLEEVE TO DAMPER FRAME AND TO PERIMETER ANGLES.
3. PERIMETER ANGLES: GALVANIZED STEEL, NOT LESS THAN 1-1/2" x 1-1/2", 14 GAGE, TO PROVIDE 1" MINIMUM OVERLAP OF OPENING ON ALL SIDES. DO NOT ATTACH TO WALL, FASTEN TO SLEEVE ONLY.
4. BREAKAWAY DUCT CONNECTION: CONTRACTORS OPTION OF TYPES SHOWN IN SMACNA LPDS, FIG. 2-13. SEAL JOINTS.
5. ACCESS DOOR: SIZE AND LOCATION TO PERMIT SERVING THE FUSIBLE LINK OR LINKS.

2 TYPICAL FIRE DAMPER DETAIL
SCALE: NOT TO SCALE

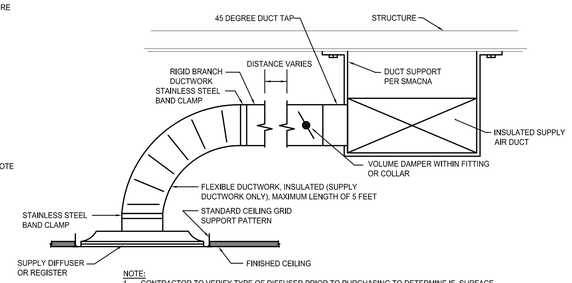

NOTE:
1. CONTRACTOR TO VERIFY TYPE OF DIFFUSER PRIOR TO PURCHASING TO DETERMINE IF SURFACE MOUNTED OR LAY-IN STYLE IS REQUIRED IN EACH LOCATION.
2. OFFSETS WITH FLEX DUCT SHALL NOT EXCEED 30 DEGREES AND SHALL BE GRADUAL. OFFSETS IN EXCESS OF 30 DEGREES SHALL BE HARD-DUCTED. GRADUAL 90 DEGREE OFFSET IS PERMITTED WHERE SPACE IS AVAILABLE.
3. FLEX DUCT SHALL NOT HAVE MORE THAN ½" SAG PER FOOT.
4. LENGTH OF FLEX DUCT SHALL NOT EXCEED 5'-0".
5. PROVIDE DUCT MOUNTED VOLUME DAMPER AS CLOSE TO MAIN DUCT AS POSSIBLE.
6. PROVIDE SINGLE BLADE DAMPERS UP TO 12" HIGH AND ON ROUND DUCT. PROVIDE MULTI BLADE DAMPERS ON ALL DUCTS OVER 12" HIGH PER SMACNA REQUIREMENTS.
7. PROVIDE LOCKING STYLE DAMPER HANDLE REGULATORS WITH HEXAGON NOT, DURO DYNE OR APPROVED EQUAL.

3 TYPICAL CEILING SUPPLY DIFFUSER DETAIL
SCALE: NOT TO SCALE

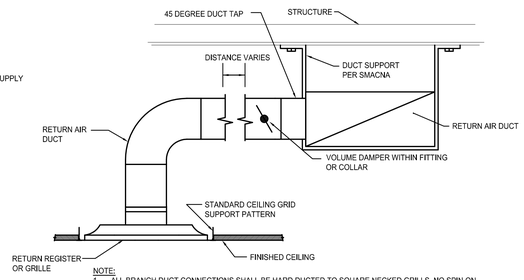

NOTE:
1. ALL BRANCH DUCT CONNECTIONS SHALL BE HARD DUCTED TO SQUARE NECKED GRILLS. NO SPIN ON COLLARS OR ROUND FLEXIBLE DUCTWORK SHALL BE ALLOWED.
2. CONTRACTOR TO VERIFY TYPE OF DIFFUSER PRIOR TO PURCHASING TO DETERMINE IF SURFACE MOUNTED OR LAY-IN STYLE IS REQUIRED IN EACH LOCATION.
3. PROVIDE DUCT MOUNTED VOLUME DAMPER AS CLOSE TO MAIN DUCT AS POSSIBLE.
4. PROVIDE SINGLE BLADE DAMPERS UP TO 12" HIGH AND ON ROUND DUCT. PROVIDE MULTI BLADE DAMPERS ON ALL DUCTS OVER 12" HIGH PER SMACNA REQUIREMENTS.
5. PROVIDE LOCKING STYLE DAMPER HANDLE REGULATORS WITH HEXAGON NOT, DURO DYNE OR APPROVED EQUAL.

4 TYPICAL CEILING RETURN REGISTER DETAIL
SCALE: NOT TO SCALE

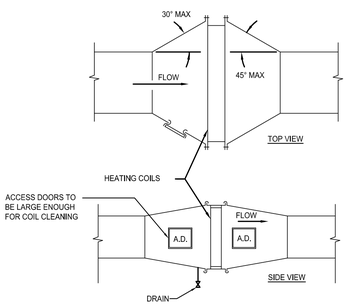

5 REMOTE HEATING COIL INSTALLTION
SCALE: NOT TO SCALE

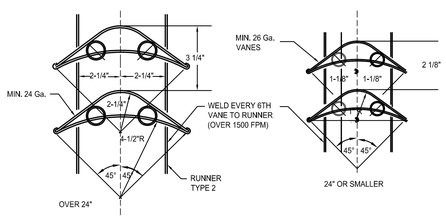

6 TURNING VANE DETAIL
SCALE: NOT TO SCALE

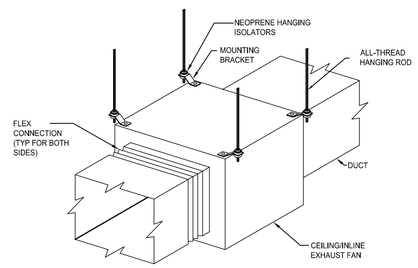

7 INLINE EXHAUST FAN DETAIL
SCALE: NOT TO SCALE

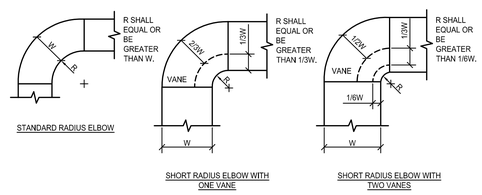

NOTE:
1. THE INTERIOR SURFACE OF ALL RADIUS ELBOWS SHALL BE MADE ROUND.
2. ALL STANDARD RADIUS ELBOWS SHOWN ON FLOOR PLANS MAY BE MADE SHORT RADIUS ELBOWS. ALL SHORT RADIUS ELBOWS SHALL HAVE VANES. VANES SHALL BE CONSTRUCTED, SUPPORTED AND FASTENED AS RECOMMENDED BY SMACNA.

8 DUCTWORD RADIUS ELBOWS
SCALE: NOT TO SCALE

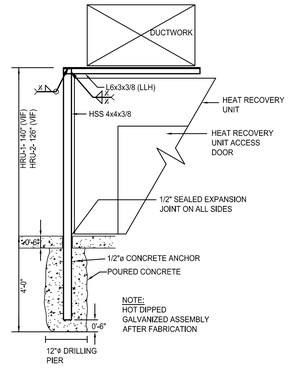

NOTE:
HOT DIPPED GALVANIZED ASSEMBLY AFTER FABRICATION

9 CANTILEVER DUCT SUPPORT
SCALE: NOT TO SCALE

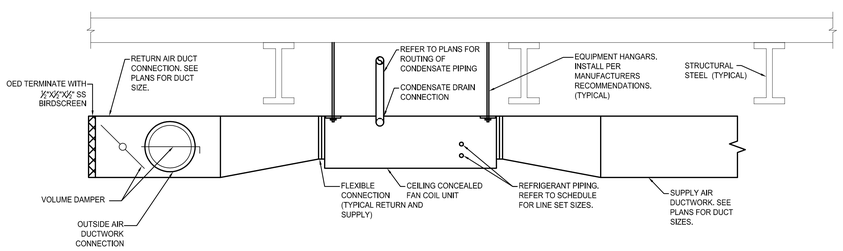

10 ABOVE CEILING CONCEALED FAN COIL UNIT DETAIL
SCALE: NOT TO SCALE

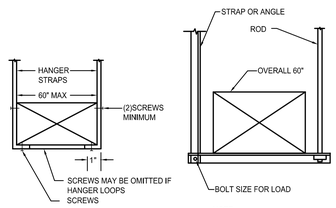

NOTE:
ROD DIMENSIONS AND ANCHORS SHALL BE SIZED PER MANUFACTURERS RECOMMENDATIONS.

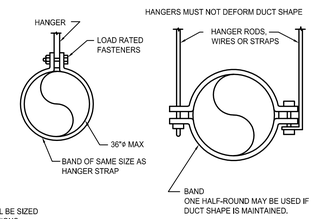

11 DUCT SUPPORT DETAIL
SCALE: NOT TO SCALE

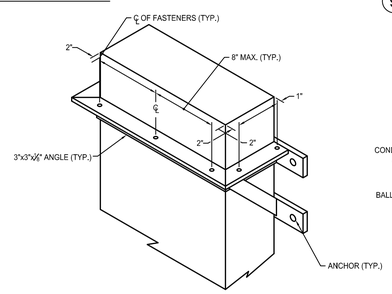

12 DUCT RISER SUPPORTS-FROM WALL
SCALE: NOT TO SCALE

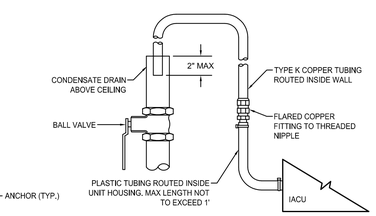

13 IACU CONDENSATE PUMP DETAIL
SCALE: NOT TO SCALE

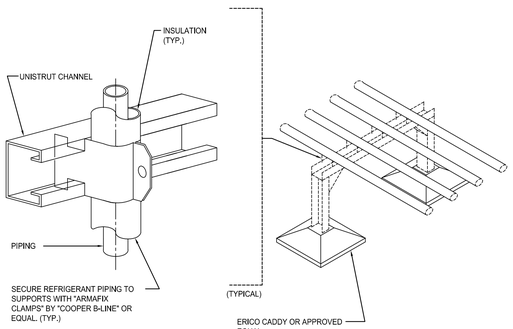

14 REFRIGERANT PIPE SUPPORT DETAIL
SCALE: NOT TO SCALE

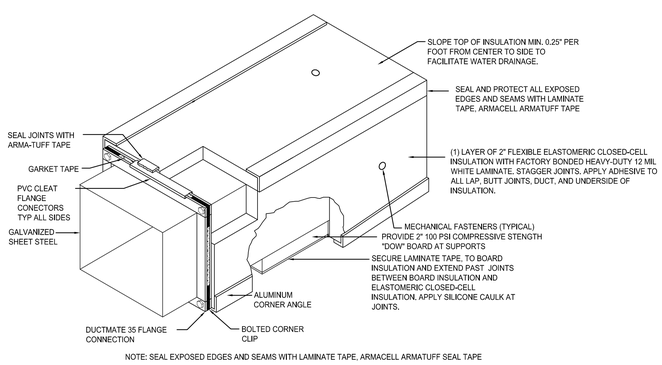

NOTE: SEAL EXPOSED EDGES AND SEAMS WITH LAMINATE TAPE, ARMACELL ARMATUFF SEAL TAPE

15 EXTERIOR DUCTWORK INSTALLATION
SCALE: NOT TO SCALE

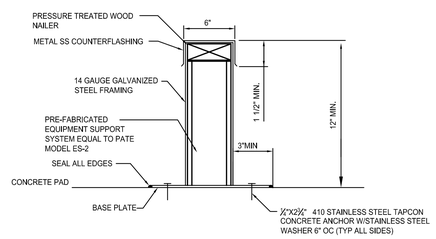

NOTE: ALL CORNERS AND SEAMS TO BE CONTINUOUSLY WELDED. ALL EXPOSED METAL OR WELDS SUSCEPTIBLE TO RUSTING TO BE PAINTED WITH COLD GALVANIZED COATING.

16 EQUIPMENT SUPPORT DETAIL
SCALE: NOT TO SCALE

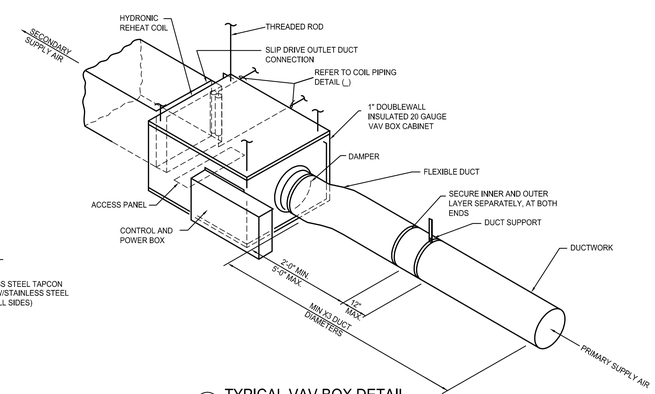

17 TYPICAL VAV BOX DETAIL
SCALE: NOT TO SCALE

GREATER LYNCHBURG TRANSIT COMPANY
1301 Kemper Street PO Box 797
Lynchburg, VA 24505-0797

PROJECT ADDRESS:
419 Bradley Dr.
Lynchburg, VA
24501-4901

Operations & Maintenance Facility

BID DOCUMENTS

wendel
1420 King Street, Suite 510
Alexandria, VA 22314
www.wendelcompanies.com
p:703.299.8718 f:703.299.8719
ALEXANDRIA ARCHITECTURE, ENGINEERING, LAND SURVEYING & LANDSCAPE ARCHITECTS, INC

Wiley|Wilson
Constant Progress
127 Nationwide Drive, Lynchburg, Virginia 24502-4272
phone 434.947.7777 | fax 434.947.1011 | web wileywilson.com

Civil · Stormwater · Traffic · Transportation
EPR
"Engineering & Planning Resources"
637 Berkshire Circle, Charlottesville, VA 22901
434.202.5082, www.epr-corp.com

NOTE:
THIS DOCUMENT, AND THE IDEAS AND DESIGNS INCORPORATED HEREIN, AS AN INSTRUMENT OF PROFESSIONAL SERVICE, IS THE PROPERTY OF THE ARCHITECT AND ENGINEER AND IS NOT TO BE USED IN WHOLE OR IN PART, FOR ANY OTHER PROJECT WITHOUT THE WRITTEN AUTHORIZATION OF THE ARCHITECT AND ENGINEER. UNAUTHORIZED ALTERATION OR ADDITION TO ANY SURVEY DRAWING, DESIGN, SPECIFICATION, PLAN OR REPORT IS PROHIBITED IN ACCORDANCE WITH STATE LAW, CODE VAC-5-21-110.

COMMONWEALTH OF VIRGINIA
RAYMOND F. JOHNSON, II
Lic. No. 0402035
PROFESSIONAL ENGINEER

Revision Number	Issued by	Revision Description	Revision Date

DWG. TITLE

HVAC DETAILS

DATE:	09/24/2014
SCALE:	AS NOTED
DWN:	GMM
CHK:	CRL
PROJ. No.	444505
DWG. No.	

H203

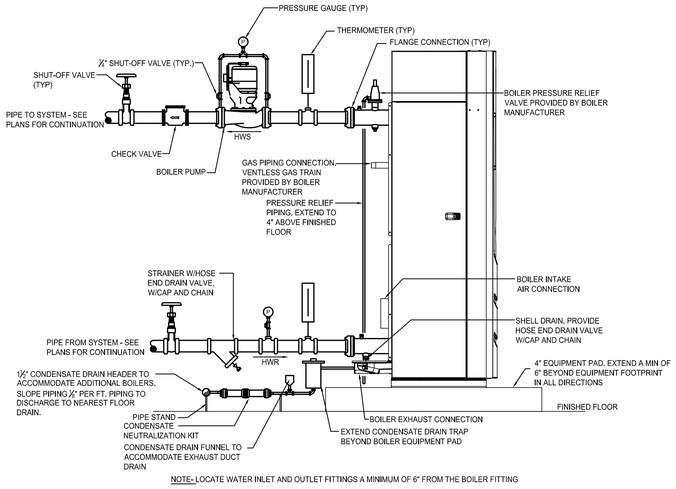

NOTE: LOCATE WATER INLET AND OUTLET FITTINGS A MINIMUM OF 6" FROM THE BOILER FITTING

1 TYPICAL BOILER
SCALE: NOT TO SCALE

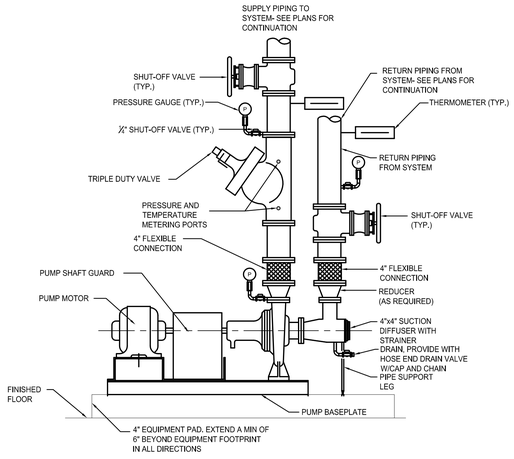

2 BASE MOUNTED CIRCULATING PUMP
SCALE: NOT TO SCALE

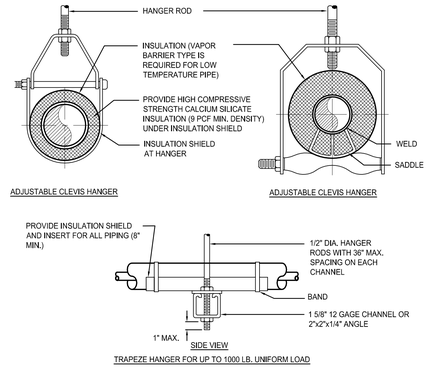

TRAPEZE HANGER FOR UP TO 1000 LB. UNIFORM LOAD

3 TYPICAL PIPE HANGER DETAIL
SCALE: NOT TO SCALE

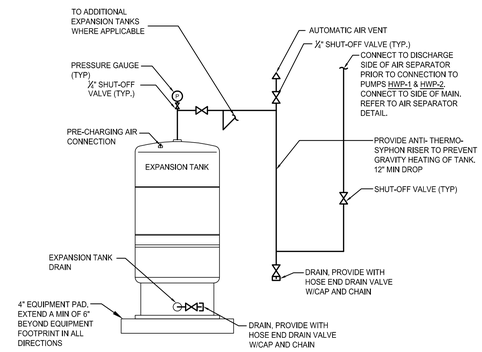

4 TYPICAL EXPANSION TANK
SCALE: NOT TO SCALE

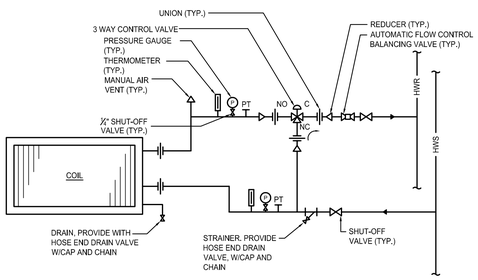

5 COIL PIPING ARRANGEMENT-3-WAY VALVE (RHC-1)
SCALE: NOT TO SCALE

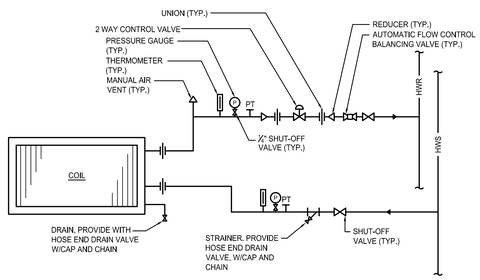

6 COIL PIPING ARRANGEMENT-2-WAY VALVE
SCALE: NOT TO SCALE

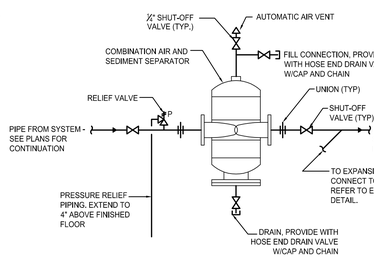

7 TYPICAL SUSPENDED AIR SEPARATOR
SCALE: NOT TO SCALE

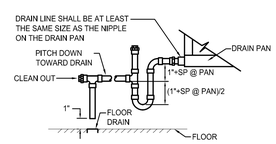

8 CONDENSATE TRAP
SCALE: NOT TO SCALE

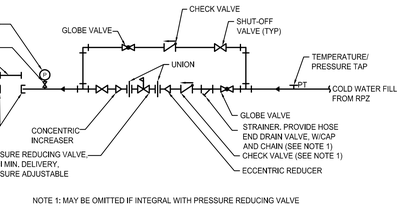

NOTE 1: MAY BE OMITTED IF INTEGRAL WITH PRESSURE REDUCING VALVE

9 PIPING SCHEMATIC-WATER INLET VALVE ASSEMBLY (WIV)
SCALE: NOT TO SCALE

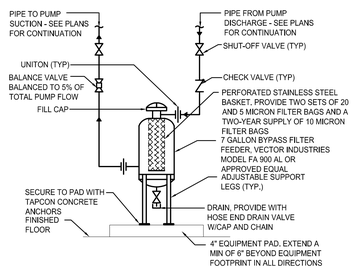

10 BYPASS FILTER FEEDER
SCALE: NOT TO SCALE

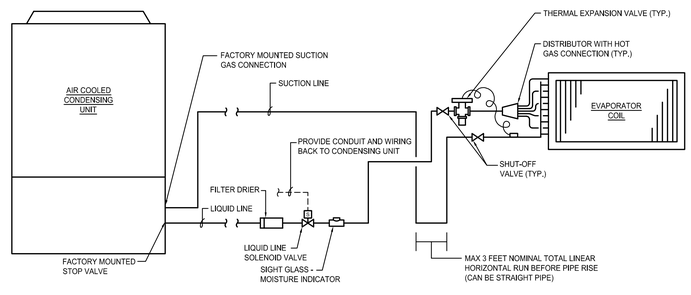

11 AIR COOLED CONDENSING UNIT/ EVAPORATOR COIL REFRIGERANT PIPING (AHU-1)
SCALE: NOT TO SCALE

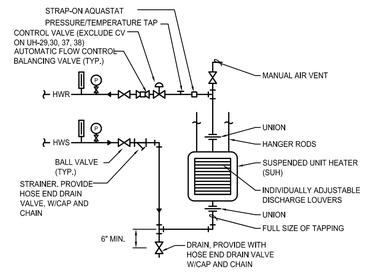

12 HOT WATER UNIT HEATER - PIPING SCHEMATIC
SCALE: NOT TO SCALE

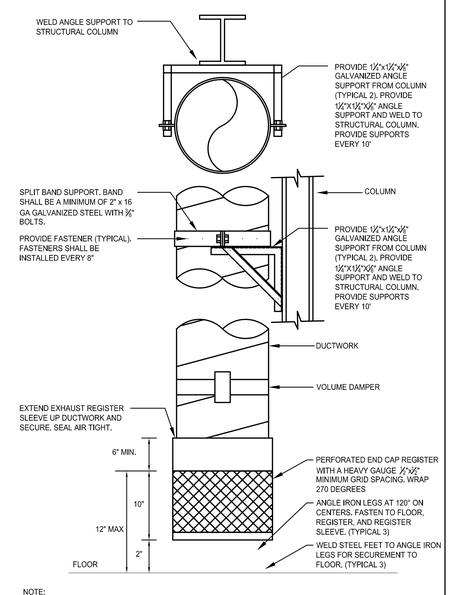

NOTE:
1. FOR RECTANGULAR DUCT REFER TO DUCT RISER SUPPORTS FROM WALL DETAIL. PROVIDE PERFORATED REGISTER AND SUPPORT AS SHOWN ON DETAIL ABOVE. MAINTAIN DIMENSIONAL CLEARANCES.
2. SUPPLY DUCTS TO TERMINATE WITH REGISTER. REFER TO SCHEDULE ON DRAWING H301 FOR FURTHER DETAIL.

17 EXHAUST AND SUPPLY REGISTER DETAIL
SCALE: NOT TO SCALE

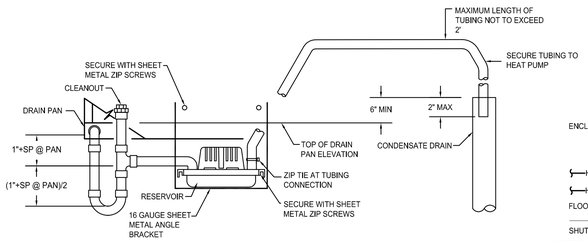

13 CONDENSATE PUMP
SCALE: NOT TO SCALE

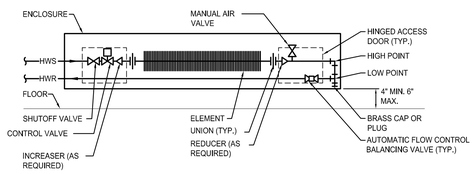

NOTE: PROVIDE ACCESS DOORS AT ALL VALVES AND VENTS IN ENCLOSURE

14 PIPING SCHEMATIC-FINNED TUBE CONVECTOR (FTC)
SCALE: NOT TO SCALE

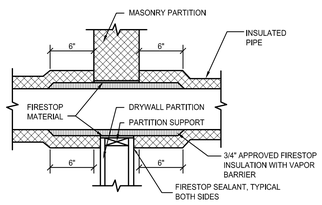

PARTITION OR CHASE PENETRATION

15 PIPE PENETRATIONS OF FIRE WALL
SCALE: NOT TO SCALE

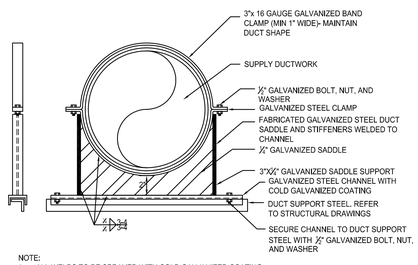

NOTE:
1. ALL WELDS TO BE SPRAYED WITH COLD GALVANIZED COATING
2. PROVIDE SUPPORTS AT EVERY DUCT SUPPORT AS SHOWN ON STRUCTURAL DRAWINGS.

16 DUCTWORK SUPPORT DETAIL
SCALE: NOT TO SCALE

GLTC
GREATER LYNCHBURG TRANSIT COMPANY
1301 Kemper Street PO Box 797
Lynchburg, VA 24505-0797

PROJECT ADDRESS:
419 Bradley Dr.
Lynchburg, VA
24501-4901

Operations & Maintenance Facility

BID DOCUMENTS

wendel
1420 King Street, Suite 510
Alexandria, VA 22314
www.wendelcompanies.com
p:703.299.8718 f:703.299.8719
ALEXANDRIA ARCHITECTURE, ENGINEERING, LAND SURVEYING & LANDSCAPE ARCHITECTS, INC

Wiley|Wilson
Constant Progress
127 Nationwide Drive, Lynchburg, Virginia 24502-4272
phone 434.947.7777 | fax 434.947.9311 | web wileywilson.com

Civil · Stormwater · Traffic · Transportation
EPR
"Engineering & Planning Resources"
637 Berkshire Circle, Charlottesville, VA 22901
434.202.5082 www.epr-corp.com

NOTE:
THIS DOCUMENT, AND THE IDEAS AND DESIGNS INCORPORATED HEREIN, AS AN INSTRUMENT OF PROFESSIONAL SERVICE, IS THE PROPERTY OF THE ARCHITECT AND THE ARCHITECT RETAINS THE COPYRIGHT. IT IS NOT TO BE USED ON OTHER PROJECT WITHOUT THE WRITTEN AUTHORIZATION OF THE ARCHITECT AND ENGINEER. UNAUTHORIZED ALTERATION OR ADDITION TO ANY SURVEY DRAWING, DESIGN, SPECIFICATION, PLAN OR REPORT IS PROHIBITED IN ACCORDANCE WITH STATE LAW, CODE AND RULES.

COMMONWEALTH OF VIRGINIA
DIAMOND F. JOHNSON, II
Lic. No. 0402235
PROFESSIONAL ENGINEER

Revision Number	Issued by	Revision Description	Revision Date
DWG. TITLE			

HVAC DETAILS

DATE	09/24/2014
SCALE	AS NOTED
DWN.	GMM
CHK.	CRL
PROJ. No.	444505
DWG. No.	

H204

HEAT RECOVERY UNIT SCHEDULE (HRU)

PLAN DESIGNATION	MANUFACTURE MODEL NO.	LOCATION	ARRANGEMENT	MAXIMUM UNIT DIMENSIONS L x W x H (IN.)	SUPPLY FAN			RETURN FAN			MIN. O.A. CFM	HEATING (GAS)							ENERGY RECOVERY - WINTER CONDITIONS				SUPPLY FAN ELECTRICAL DATA					RETURN FAN ELECTRICAL DATA					ELECTRICAL DATA				NOTES
					AIR FLOW (CFM)	EXTERNAL SP (IN. WC)	TOTAL SP (IN. WC)	AIR FLOW (CFM)	EXTERNAL SP (IN. WC)	TOTAL SP (IN. WC)		MAX INPUT CAPACITY (MBH)	MAX OUTPUT CAPACITY (MBH)	TURNDOWN RATIO	AFUE (%)	DELTA T (°F)	BURNER VOLTS/PHASE	BURNER FLA	OUTSIDE AIR IN °Fdb	EXHAUST AIR IN °Fdb / %RH	SUPPLY AIR °Fdb	EXHAUST AIR OUT °Fdb	MOTOR QUANTITY	MOTOR BHP	MOTOR HP	MOTOR RPM	VOLTS/ PHASE	MOTOR QUANTITY	MOTOR BHP	MOTOR HP	MOTOR RPM	VOLTS/ PHASE	VOLTS/ PHASE	FLA	MCA	MOCP	
HRU-1	AIR ZONE INTERNATIONAL RTAH-64ERU	OUTDOOR	HORIZONTAL	464 x 195 x 132	33,550	1.50	4.43	27,880	1.3	3.30	33,550	3000	2400	30:1	80	66.6	120/1ϕ	18.48	12	67 / 30	43.5	32.0	2	16.53	20	1491	460/3ϕ	2	11.39	15	1612	460/3ϕ	460/3ϕ	87	108	175	1,2,3,4,5,6,7,8,9,10,11,12,13,14,15,16,17
HRU-2	AIR ZONE INTERNATIONAL RTAH-34ERU	OUTDOOR	HORIZONTAL	320 x 162 x 118	10,620	0.75	3.46	5,205	0.60	2.0	10,620	1000	800	10:1	80	69.0	120/1ϕ	6.74	12	60 / 40	32.3	25.1	2	4.44	5.0	1926	460/3ϕ	2	1.40	2	2110	460/3ϕ	460/3ϕ	20.3	25	40	1,2,3,4,5,6,7,8,9,10,11,12,13,14,15,16,17

NOTES:
1. UNIT SELECTION SHALL UTILIZE DIRECT DRIVE PLENUM STYLE SUPPLY AND RETURN FANS WITH PREMIUM EFFICIENCY INVERTER DUTY MOTORS, NEMA MG1.
2. PROVIDE 2" THICK DOUBLE WALL GALVANIZED STEEL INSULATED CABINET, ROOF AND WALLS., MINIMUM R-13. OUTSIDE OF CABINET TO BE PAINTED.
3. PROVIDE ONE SUPPLY AND ONE RETURN VARIABLE FREQUENCY DRIVE WITH INTEGRAL HAND-OFF-AUTO SELECTION SWITCH AND LOCKABLE DISCONNECT, RECESSED IN UNIT CABINET, FURNISHED BY UNIT MANUFACTURER. SINGLE DRIVE TO CONTROL EACH SET OF SUPPLY AND RETURN FANS. PROVIDE WIRING AND CONDUIT BETWEEN FANS AND DRIVE. UNIT TO BE PREWIRED TO PROVIDE SINGLE POINT ELECTRICAL CONNECTION TO VFD.
4. PROVIDE 2" MERV 8 FILTERS.
5. PROVIDE SIDE LOADING AND REMOVABLE FILTERS
6. FAN STATIC PRESSURES TO BE BASED ON FILTERS IN REPLACEMENT CONDITION (.2" WC ALLOWANCE)
7. PROVIDE SEPARATE 120V/1ϕ POWER CIRCUITING FOR MARINE LIGHTS, OUTLETS, AND ACCESSORIES. REFER TO SPECIFICATIONS FOR LOCATION OF LIGHTS, OUTLETS, AND ACCESSORIES.
8. UNIT TO BE PROVIDED WITH SPLIT SECTIONS TO ACCOMMODATE SHIPPING.
9. PROVIDE RETURN AND OUTSIDE AIR CONTROL DAMPERS FACTORY MOUNTED WITH UNIT.
10. UNIT TO BE FACTORY FABRICATED AS ONE UNIT BY ONE MANUFACTURER.
11. PROVIDE FACTORY INSTALLED DOOR KILL SWITCHES ASSOCIATED WITH THE FAN SECTION ACCESS DOOR. KILL SWITCHES TO BE WIRED TO VFD TO AUTOMATICALLY DE-ENERGIZE FANS WHEN DOOR IS OPENED.
12. PROVIDE EXPLOSION PROOF SPARK RESISTANT RETURN FAN AND MOTOR.
13. UNIT TO BE RATED FOR EXTERIOR INSTALLATION. PROVIDE WRAP AROUND GUTTERS.
14. PROVIDE DOUBLE WALL 2" PRE MANUFACTURED INSULATED FLUE VENT EXTENSION AND WEATHER PROOF CAP. EXTEND FLUE 3' ABOVE UNIT ROOF.
15. PROVIDE CONTROL CABINET RECESSED WITHIN THE UNIT CABINET.
16. UNIT DIMENSIONS INCLUDE HOODS
17. BURNER GAS INLET SUPPLY PRESSURE SHALL BE 5.0" TO 13.5" W.C.

AIR HANDLING UNIT SCHEDULE (AHU)

PLAN DESIGNATION	MANUFACTURER MODEL NO.	LOCATION	ARRANGEMENT	DIMENSIONS (L x W x H)	AIR FLOW RATE (CFM)	MIN. O.A. CFM (OCCUPIED)	MAX. O.A. CFM ECONOMIZER (OCCUPIED)	MIN. CFM HEATING	EXTERNAL SP (IN. WC)	TOTAL SP (IN. WC)	DRIVE TYPE	DX COOLING COIL								HOT WATER COIL						ELECTRICAL DATA				NOTES
												TOTAL CAP. (MBH)	SENS. CAP. (MBH)	EAT (°Fdb/°Fwb)	LAT (°Fdb/°Fwb)	MIN. COIL AREA (SF)	SAT.SUCTION TEMP. (°F)	REFRIGERANT TYPE	ASSOCIATED EQUIPMENT	CAPACITY (MBH)	EAT/LAT (°F)	EWT/LWT (°F)	FLOW RATE (GPM)	WPD (FT HD)	MIN. COIL AREA (SF)	MOTOR BHP	MOTOR HP	MOTOR RPM	VOLTS/ PHASE	
AHU-1	CARRIER 39MN17	MECH. RM. M116	HORIZONTAL	13'-6" x 7'-6" x 4'-2"	8,910	1,470	8,910	5190	1.00	4.07	BELT	280.53	216.11	77.3/64.2	54.9/53.4	16.93	46.4	R-410A	ACCU-1	165.6	25.0/54.2	180/130	7.1	0.1	16.25	10.9	15	1800	460/3ϕ	1,2,3,4,5,6
AHU-2	CARRIER 42BHE	MECH. RM. M116	HORIZONTAL	3'-2" x 3'-11" x 1'-10"	1,600	400	N/A	1,600	0.75	1.26	BELT	57.78	43.79	78.8/65.3	53.8/53.2	-	45.0	R-410A	ACCU-2	59.24	40/73.9	180/130	2.4	1.22	-	0.49	1	975	460/3ϕ	1,2,3,6,7

NOTES:
1. PROVIDE PREMIUM EFFICIENT INVERTER DUTY MOTOR.
2. PROVIDE VARIABLE FREQUENCY DRIVE WITH INTEGRAL HAND-OFF-AUTO SELECTION SWITCH AND LOCKABLE DISCONNECT.
3. PROVIDE 2" MERV 8 FILTERS PRE FILTER
4. PROVIDE 4" MERV 13 POST FILTERS
5. PROVIDE 2" THICK DOUBLE WALL GALVANIZED STEEL INSULATED CABINET, ROOF AND WALLS., MINIMUM R-13
6. PROVIDE MIXING BOX ASSEMBLY. CONSTRUCTION TO MATCH UNIT.
7. UNIT TO BE SUSPENDED FROM STRUCTURE. PROVIDE CEILING SUSPENSION RUBBER IN SHEAR VIBRATION ISOLATORS.

RELIEF AIR FAN SCHEDULE (RAF)

PLAN DESIGNATION	MANUFACTURER MODEL NO.	LOCATION	ARRANGEMENT	AIR FLOW RATE (CFM)	EXTERNAL STATIC PRESSURE (IN. WC)	DRIVE TYPE	FAN SPEED (RPM)	ELECTRICAL DATA			NOTES
								MOTOR BHP	MOTOR HP	VOLTS/ PHASE	
RAF-1	GREENHECK BSQ-240-30	MECH RM M116	CENTRIFUGAL, INLINE	7440	1.0	BELT	960	2.56	3	460/3ϕ	1,2,3,4,5,6,7

NOTES:
1. PROVIDE VARIABLE FREQUENCY DRIVE WITH INTEGRAL HAND-OFF-AUTO SELECTION SWITCH AND LOCKABLE DISCONNECT.
2. UNIT TO BE SUSPENDED FROM STRUCTURE. PROVIDE CEILING SUSPENSION RUBBER IN SHEAR VIBRATION ISOLATORS.
3. PROVIDE SOLID SHAFT WITH ANTI CORROSION COATING AND EXTENDED LUBE LINES.
4. PROVIDE WITH OSHA APPROVED BELT GUARD.
5. PROVIDE INVERTER DUTY PREMIUM EFFICIENCY MOTOR, CLASS F INSULATION.
6. PROVIDE ACOUSTICAL INSULATED HOUSING.
7. PROVIDE FLEXIBLE DUCT CONNECTION AT FAN INLET AND OUTLET.

FAN COIL UNIT SCHEDULE (FCU)

PLAN DESIGNATION	MANUFACTURER MODEL NO.	LOCATION	TYPE	AIR FLOW (CFM)	MIN. O.A. CFM (OCCUPIED)	DX COOLING COIL						HOT WATER COIL					ELECTRICAL DATA			NOTES
						TOTAL CAPACITY (MBH)	SENSIBLE CAPACITY (MBH)	EAT (°Fdb/°Fwb)	LAT (°Fdb/°Fwb)	REFRIGERANT TYPE	ASSOCIATED EQUIPMENT	CAPACITY (MBH)	EAT/LAT (°F)	EWT/LWT (°F)	FLOW RATE (GPM)	WPD (FT HD)	MOTOR FLA	UNIT MCA	VOLTS/ PHASE	
FCU-1	CARRIER 42DCA20	LOCKERS A120	HORIZONTAL, CONCEALED	1,630	280	56.8	43.9	77.2/64.1	52.6/52.1	R-410A	ACCU-3	58.0	61.5/94.1	180/135	2.6	13.95	8.4	21.0	115/1ϕ	1,2,3,4,5

NOTES:
1. PROVIDE TWO (2) VARIABLE SPEED ECM MOTORS AND TWO (2) BLOWERS.
2. PROVIDE WITH REAR RETURN.
3. PROVIDE INSULATED CABINET.
4. PROVIDE 1" PLEATED MERV 8 FILTER.
5. PROVIDE NON-FUSED UNIT MOUNTED DISCONNECT SWITCH.
6. PROVIDE 115/1 PH CONDENSATE LIFT PUMP, LITTLE GIANT VCC-20, 1/30 HP, 1.5 AMPS.

INDOOR SPLIT SYSTEM AIR CONDITIONING UNIT (IACU)

PLAN DESIGNATION	MANUFACTURER MODEL NO.	LOCATION	TYPE	ASSOCIATED AIR COOLED CONDENSING UNIT	COOLING		HEATING	AIRFLOW (CFM)	REFRIGERANT TYPE	ELECTRICAL			GAS LINE SIZE (IN.)	LIQUID LINE SIZE (IN.)	NOTES
					NOMINAL CAPACITY (MBH)	SENSIBLE CAPACITY (MBH)	NOMINAL CAPACITY (MBH)			VOLTS/ PHASE	MCA	MOP			
IACU-1	CARRIER 40QNC01824-3	IT A127	WALL MOUNTED CASSETTE	ACCU-4	22.0	14.2	N/A	645	R410A	208/1ϕ	0.48	15	5/8	3/8	1,2,3,4,5,6
IACU-2	CARRIER 40QNC01824-3	IT/WIRING ROOM M129	WALL MOUNTED CASSETTE	ACCU-5	22.0	14.2	N/A	645	R410A	208/1ϕ	0.48	15	5/8	3/8	1,2,3,4,5,6
IACU-3	CARRIER RAV-SP180UT-UL	FARE COLLECTION & VAULT M125	COMPACT 4-WAY CEILING UNIT	ACCU-6	19.0	-	18.8	600	R410A	208/1ϕ	-	-	1/2	1/4	1,2,3,4,5,6,7

NOTES:
1. PROVIDE INTEGRAL CONDENSATE LIFT PUMP.
2. RATING CONDITIONS ARE BASED UPON 80°F DB/67° WB AND 95° AMBIENT TEMPERATURE.
3. INSTALL UNITS PER MANUFACTURER'S RECOMMENDATIONS.
4. PROVIDE WALL MOUNTED ADJUSTABLE DIGITAL THERMOSTAT.
5. FINAL REFRIGERANT PIPE SIZES PER MANUFACTURERS RECOMMENDATION. SCHEDULED SIZES ARE CONNECTION SIZES AT THE UNIT, PROVIDE INDOOR UNIT LIQUID AND GAS PIPE REDUCERS AS REQUIRED.COORDINATE LINE SIZES WITH MANUFACTURER PRIOR TO ORDERING.
6. PROVIDE WITH WASHABLE LONG-LIFE FILTER.
7. INDOOR UNIT IS POWERED FROM ASSOCIATED OUTDOOR UNIT.

AIR COOLED CONDENSING UNIT SCHEDULE (ACCU)

PLAN DESIGNATION	MANUFACTURER MODEL NO.	LOCATION	ASSOCIATED EQUIPMENT	COOLING				ELECTRICAL			REFRIGERANT TYPE	GAS LINE SIZE (IN.)	LIQUID LINE SIZE (IN.)	NOTES
				NO. OF FANS	NOMINAL CAPACITY (TONS)	EER	NO. OF CIRCUITS	VOLTS/ PHASE	MCA	MOP				
ACCU-1	CARRIER 38APD025	OUTDOOR	AHU-1	2	25	11	2	460/3	48.5	60	R410a	1 3/8	5/8	1,2
ACCU-2	CARRIER 24ACB760-3	OUTDOOR	AHU-2	1	5	13.8	1	208/1	30.1	50	R410a	7/8	3/8	1,2
ACCU-3	CARRIER 24ACB760-3	OUTDOOR	FCU-1	1	5	13.8	1	208/1	30.1	50	R410a	7/8	3/8	1,2
ACCU-4	CARRIER 38HDF024	OUTDOOR	IACU-1	1	2	12	1	208/1	16.8	25	R410a	5/8	3/8	1,2
ACCU-5	CARRIER 38HDF024	OUTDOOR	IACU-2	1	2	12	1	208/1	16.8	25	R410a	5/8	3/8	1,2
ACCU-6	CARRIER RAV-SP180AT2-UL	OUTDOOR	IACU-3	1	2	10.7	1	208/1	17.0	30	R410a	1/2	1/4	1,2.3

NOTES:
1. PROVIDE SINGLE POINT POWER, NON-FUSED NEMA 3R DISCONNECT, AND MOTOR STARTER.
2. FINAL REFRIGERANT PIPE SIZES PER MANUFACTURERS RECOMMENDATION. SCHEDULED SIZES ARE CONNECTION SIZES AT THE UNIT, PROVIDE INDOOR UNIT LIQUID AND GAS PIPE REDUCERS AS REQUIRED.COORDINATE LINE SIZES WITH MANUFACTURER PRIOR TO ORDERING
3. UNIT TO BE A HEAT PUMP TO PROVIDE HEATING AND COOLING TO THE SPACE.

AIR INLET AND OUTLET SCHEDULE

PLAN DESIGNATION	CFM RANGE	MAX S.P.	MANUFACTURER MODEL NO.	TYPE	NECK SIZE (IN.)	FACE SIZE (IN.)	N.C. LEVEL	NOTES
CD	0-200	.062	PRICE SCD	CEILING DIFFUSER	6"	24"x24"	< 30	W/ VOLUME DAMPER
CD	200-350	.080	PRICE SCD	CEILING DIFFUSER	8"	24"x24"	< 30	W/ VOLUME DAMPER
CD	350-550	.060	PRICE SCD	CEILING DIFFUSER	10"	24"x24"	< 30	W/ VOLUME DAMPER
CD	550-700	.050	PRICE SCD	CEILING DIFFUSER	12"	24"x24"	< 30	W/ VOLUME DAMPER
CD	700-1000	.060	PRICE SCD	CEILING DIFFUSER	14"	24"x24"	< 30	W/ VOLUME DAMPER
LD	0-200	.126	PRICE SDB	LINEAR DIFFUSER	12"	-	< 30	(2) SLOT, 3/4" SLOT WIDTH, WITH INSULATED PLENUM, 48" LONG.
SR	0-180	.146	PRICE 520D	SUPPLY REGISTER	-	6"x6"	< 30	W/ OPPOSED BLADE DAMPER. FRONT BLADES PARALLEL TO LONG DIMENSION.
SR	180-390	.146	PRICE 520D	SUPPLY REGISTER	-	8"x8"	< 30	W/ OPPOSED BLADE DAMPER. FRONT BLADES PARALLEL TO LONG DIMENSION.
SR	390-550	.094	PRICE 520D	SUPPLY REGISTER	-	12"x10"	< 30	W/ OPPOSED BLADE DAMPER. FRONT BLADES PARALLEL TO LONG DIMENSION.
SR	550-945	.094	PRICE 520D	SUPPLY REGISTER	-	20"x10"	< 30	W/ OPPOSED BLADE DAMPER. FRONT BLADES PARALLEL TO LONG DIMENSION.
ER	0-125	.190	PRICE 635DAL	EXHAUST REGISTER	-	6"x6"	< 30	W/ OPPOSED BLADE DAMPER
ER	125-230	.139	PRICE 635DAL	EXHAUST REGISTER	-	8"x8"	< 30	W/ OPPOSED BLADE DAMPER
ER	230-360	.139	PRICE 635DAL	EXHAUST REGISTER	-	10"x10"	< 30	W/ OPPOSED BLADE DAMPER
ER	360-455	.097	PRICE 635DAL	EXHAUST REGISTER	-	12"x12"	< 30	W/ OPPOSED BLADE DAMPER
ER	455-590	.097	PRICE 635DAL	EXHAUST REGISTER	-	14"x14"	< 30	W/ OPPOSED BLADE DAMPER
ER	590-800	.097	PRICE 635DAL	EXHAUST REGISTER	-	16"x16"	< 30	W/ OPPOSED BLADE DAMPER
ER	800-1240	.062	PRICE 635DAL	EXHAUST REGISTER	-	26"x18"	< 30	W/ OPPOSED BLADE DAMPER
RR	0-455	.097	PRICE 535D	RETURN REGISTER	-	12"x12"	< 30	W/ OPPOSED BLADE DAMPER
RR	0-1450	.062	PRICE 535D	RETURN REGISTER	-	24"x24"	< 30	W/ OPPOSED BLADE DAMPER
DR	0-1450	.062	PRICE 535D	DUCT REGISTER	-	34"x16"	< 30	W/ OPPOSED BLADE DAMPER
DD	0-450	0.134	PRICE HCD	DRUM DIFFUSER	-	18"x6"	< 30	W/ OPPOSED BLADE DAMPER
DD	450-1000	0.106	PRICE HCD	DRUM DIFFUSER	-	24"x12"	< 30	W/ OPPOSED BLADE DAMPER
TG	50-700	.16	PRICE 535	RETURN GRILLE	12"x12"	-	< 30	-
TG	700-1500	.16	PRICE 535	RETURN GRILLE	24"x24"	-	< 30	-

NOTES:
VERIFY CEILING TYPE BEFORE SUBMITTING SHOP DRAWINGS. PROVIDE REQUIRED BRACKETS, FLANGES, SURFACE PLATES, ETC. TO MOUNT DIFFUSERS, REGISTERS AND GRILLES IN CEILINGS. PROVIDE ALUMINUM DIFFUSERS AND REGISTERS IN TOILET, LOCKER, CUSTODIAL, CHASSIS WASH, BUS WASH, AND WATER RECYCLING ROOMS.

VARIABLE AIR VOLUME BOX SCHEDULE (VAV)

PLAN DESIGNATION	MANUFACTURER MODEL NO.	LOCATION	MAXIMUM AIR FLOW (CFM)	MINIMUM HEATING AIR FLOW (CFM)	AIR PRESSURE DROP (IN. WC)	COIL DATA						MAXIMUM NC	INLET DIA. (IN.)	NOTES
						ROWS	CAPACITY (MBH)	EAT/LAT (°F)	EWT/LWT (°F)	FLOW RATE (GPM)	WPD (FT HD)			
VAV-1	CARRIER 35E	CORRIDOR A2	550	380	0.297	2	19.68	55.0/102.9	180.0/139.4	1.00	0.34	16	8	1,2,3,4
VAV-2	CARRIER 35E	CORRIDOR A2	350	280	0.252	2	14.49	55.0/102.9	180.0/144.0	0.83	0.18	16	6	1,2,3,4
VAV-3	CARRIER 35E	CORRIDOR A2	695	485	0.455	2	25.11	55.0/102.9	180.0/149.6	1.70	0.88	19	8	1,2,3,4
VAV-4	CARRIER 35E	TRAIN. OFF. & STORAGE A115	505	255	0.158	1	10.03	55.0/91.4	180.0/159.3	1.00	0.72	15	8	1,2,3,4
VAV-5	CARRIER 35E	TRAIN OFF. & STORAGE A115	285	60	0.115	1	6.20	55.0/102.8	180.0/163.0	0.75	0.31	18	6	1,2,3,4
VAV-6	CARRIER 35E	CORRIDOR A3	575	430	0.322	2	22.31	55.0/103.0	180.0/144.6	1.30	0.55	20	8	1,2,3,4
VAV-7	CARRIER 35E	CORRIDOR A4	695	290	0.286	1	10.97	55.0/90.0	180.0/162.6	1.30	1.14	24	8	1,2,3,4
VAV-8	CARRIER 35E	WORK AREA A125	220	170	0.071	1	7.55	55.0/96.1	180.0/167.6	1.25	0..77	13	6	1,2,3,4
VAV-9	CARRIER 35E	CORRIDOR A4	595	320	0.214	1	12.12	55.0/90.1	180.0/167.5	2.00	2.44	21	8	1,2,3,4
VAV-10	CARRIER 35E	EXERCISE A142	785	145	0.358	1	8.31	55.0/103.1	180.0/161.0	0.90	0.59	25	8	1,2,3,4
VAV-11A	CARRIER 35E	WOMAN TOILET ROOM	150	150	0.121	1	7.02	55.0/98.3	180.0/165.5	1.00	0.52	19	4	1,2,3,4
VAV-11B	CARRIER 35E	MEN TOILET ROOM	100	100	0.054	1	5.19	55.0/103.0	180.0/153.3	0.40	0.10	11	4	1,2,3,4
VAV-12	CARRIER 35E	CORRIDOR A5	165	95	0.145	1	4.95	55.0/103.2	180.0/150.9	0.35	0.08	21	4	1,2,3,4
VAV-13	CARRIER 35E	FILE STOR A135	265	150	0.100	1	7.32	55.0/100.2	180.0/169.9	1.50	1.07	16	6	1,2,3,4
VAV-14	CARRIER 35E	FIXED ROUTE DISPATCH A137	600	565	0.170	2	29.08	55.0/102.7	180.0/140.0	1.50	0.40	12	10	1,2,3,4
VAV-15	CARRIER 35E	FIXED ROUTE DISPATCH A137	165	105	0.145	1	5.41	55.0/102.7	180.0/155.2	0.45	0.13	21	4	1,2,3,4
VAV-16	CARRIER 35E	COMMON WORK AREA M113	125	60	0.084	1	4.72	55.0/103.5	180.0/148.6	0.31	0.07	15	4	1,2,3,4
VAV-17	CARRIER 35E	COMMON WORK AREA M113	355	180	0.174	1	7.51	55.0/93.6	180.0/164.5	1.00	0.52	20	6	1,2,3,4
VAV-18	CARRIER 35E	MAINTENANCE BREAK ROOM M107	875	380	0.207	1	14.43	55.0/90.17	180.0/161.4	1.60	0.48	14	10	1,2,3,4
VAV-19	CARRIER 35E	CONSULTATION M109	350	215	0.169	1	8.44	55.0/91.4	180.0/168.4	1.50	1.07	20	6	1,2,3,4
VAV-20	CARRIER 35E	PARTS CLERK M123A	420	355	0.353	2	16.90	55.0/99.7	180.0/145.2	1.00	0.25	21	6	1,2,3,4
VAV-21	CARRIER 35E	MAINT TRAINING RM A119	825	555	0.303	2	25.26	55.0/97.14	180.0/127.9	1.00	0.19	13	10	1,2,3,4
VAV-22	CARRIER 35E	MAINT TRAINING RM A119	825	555	0.303	2	25.26	55.0/97.14	180.0/127.9	1.00	0.19	13	10	1,2,3,4

NOTES:
1. PROVIDE WITH BOTTOM ACCESS PANEL.
2. VAV BOX TO BE INSULATED WITH FOIL FACED INSULATION. REFER TO SPECIFICATIONS FOR FURTHER DETAIL.
3. PROVIDE WITH CONTROL ENCLOSURE
4. PROVIDE WITH AIRFLOW SENSOR

GREATER LYNCHBURG TRANSIT COMPANY
1301 Kemper Street PO Box 797
Lynchburg, VA 24505-0797

PROJECT ADDRESS:
419 Bradley Dr.
Lynchburg, VA
24501-4901

Operations & Maintenance Facility

BID DOCUMENTS

wendel
1420 King Street, Suite 510
Alexandria, VA 22314
www.wendelcompanies.com
p:703.299.8718 f:703.299.8719
ALEXANDRIA ARCHITECTURE, ENGINEERING, LAND SURVEYING & LANDSCAPE ARCHITECTS, INC

Wiley|Wilson Constant Progress
127 Nationwide Drive, Lynchburg, Virginia 24502-4272
phone 434.947.1901 | fax 434.947-1601 | web wileywilson.com

Civil · Stormwater · Traffic · Transportation
WBE/DBE
E&PR
"ENGINEERING & PLANNING RESOURCES"
637 BERKMAR CIRCLE, CHARLOTTESVILLE, VA 22901
434.202.5082. WWW. EPR-CORP.COM

NOTE:
THIS DOCUMENT, AND THE IDEAS AND DESIGNS INCORPORATED HEREIN, AS AN INSTRUMENT OF PROFESSIONAL SERVICE, IS THE PROPERTY OF THE ARCHITECT AND ENGINEER AND IS NOT TO BE USED IN WHOLE OR IN PART, FOR ANY OTHER PROJECT WITHOUT THE WRITTEN AUTHORIZATION OF THE ARCHITECT AND ENGINEER. UNAUTHORIZED ALTERATION OR ADDITION TO ANY SURVEY DRAWING, DESIGN, SPECIFICATION, PLAN OR REPORT IS PROHIBITED IN ACCORDANCE WITH STATE LAW, CODE AND RULES.

COMMONWEALTH OF VIRGINIA
RAYMOND F. JOHNSON, II
Lic. No. 042235
PROFESSIONAL ENGINEER

Revision Number	Issued by	Revision Description	Revision Date

DWG. TITLE

HVAC SCHEDULES

DATE 09/24/2014
SCALE AS NOTED
DWN. GMM CHK. CRL
PROJ. No. 444505
DWG. No.

H301

BOILER SCHEDULE (HWB)

PLAN DESIGNATION	MANUFACTURER MODEL NO.	LOCATION	HEATING INPUT (MBH)	FUEL BURNER TYPE	LWT/EWT (°F)	MINIMUM GAS PRESSURE (IN WC)	FLUE OUTLET SIZE (IN.)	COMBUSTION AIR INLET SIZE (IN.)	OPERATING PRESSURE (PSI)	MAX WORKING PRESSURE (PSI)	ELECTRICAL DATA		NOTES
											VOLTS/PH	AMPS	
HWB-1	AERCO BENCHMARK 750	MECH RM M134	750	NAT. GAS	180/130	4	6	6	-	160	115/1φ	13	SEE BELOW
HWB-2	AERCO BENCHMARK 750	MECH RM M134	750	NAT. GAS	180/130	4	6	6	-	160	115/1φ	13	SEE BELOW
HWB-3	AERCO BENCHMARK 750	MECH RM M134	750	NAT. GAS	180/130	4	6	6	-	160	115/1φ	13	SEE BELOW

NOTES:
1. PROVIDE EMERGENCY SHUT-DOWN SWITCH INSTALLED PER MANUFACTURERS RECOMMENDATIONS.
2. PROVIDE CONDENSATE NEUTRALIZATION KIT
3. INSTALL BOILERS PER MANUFACTURERS RECOMMENDATIONS. REFER TO INSTALLATION MANUAL FOR SIDE BY SIDE INSTALLATION REQUIREMENTS.
4. PROVIDE INSULATED STAINLESS STEEL HEAT EXCHANGER
5. PROVIDE FACTORY INSTALLED STAND-ALONE CONTROL SYSTEM CAPABLE OF BMS SYSTEM INTEGRATION AND LED DISPLAY BY BOILER MANUFACTURER. PROVIDE CONVERTOR CONTROL PANEL AS REQUIRED TO COMMUNICATE WITH BMS CONTROL LANGUAGE.
6. BOILER TO BE SUPPLIED WITH INTERNAL COMBUSTION BLOWER.
7. PROVIDE SECURITY CHIMNEYS AL29-4C DOUBLE WALL FLUE PIPING WITH 1" AIR GAP OR APPROVED EQUAL.
8. PROVIDE SECURITY CHIMNEYS AL29-4C SINGLE WALL STAINLESS STEEL INTAKE PIPING SYSTEM.
9. PROVIDE VENTLESS GAS TRAIN AND MODULATING GAS VALVE.
10. PROVIDE WITH REMOTE SUPPLY TEMPERATURE SENSOR.
11. PROVIDE PRESSURE RELIEF VALVE.
12. PROVIDE EXTERNAL CONDENSATE TRAP.

PUMP SCHEDULE (P)

PLAN DESIGNATION	MANUFACTURER MODEL NO.	LOCATION	ARRANGEMENT	SERVICE	MEDIA	FLOW RATE (GPM)	IMPELLER SIZE (IN.)	WPD (FT HD)	ELECTRICAL DATA				NOTES
									MOTOR BHP	MOTOR HP	MOTOR RPM	VOLTS/ PHASE	
HWP-1	TACO FI 2009	MECH RM 134	BASE MOUNTED	HOT WATER LOOP	HOT WATER	133	8.4	74	3.75	5	1760	460/3φ	1,2,3,4
HWP-2	TACO FI 2009	MECH RM 134	BASE MOUNTED	HOT WATER LOOP	HOT WATER	133	8.4	74	3.75	5	1760	460/3φ	1,2,3,4
HWP-3	TACO 1935	MECH RM 134	INLINE	BOILER PUMP	HOT WATER	30	4.2	15	0.28	1/2	3450	115/1φ	1,2,3,4
HWP-4	TACO 1935	MECH RM 134	INLINE	BOILER PUMP	HOT WATER	30	4.2	15	0.28	1/2	3450	115/1φ	1,2,3,4
HWP-5	TACO 1935	MECH RM 134	INLINE	BOILER PUMP	HOT WATER	30	4.2	15	0.28	1/2	3450	115/1φ	1,2,3,4

NOTES:
1. PROVIDE VARIABLE FREQUENCY DRIVE WITH INTEGRAL HAND-OFF-AUTO SELECTION SWITCH AND LOCKABLE DISCONNECT
2. PROVIDE PREMIUM EFFICIENCY INVERTER DUTY MOTOR, NEMA M6.
3. PROVIDE FINE MESH STRAINER FOR START-UP. PROVIDE SECOND REMOVABLE STAINLESS STEEL FILTER TO BE INSTALLED AFTER INITIAL FLUSH.
4. PROVIDE SILICON CARBIDE SEALS

EXHAUST FAN SCHEDULE (EF)

PLAN DESIGNATION	MANUFACTURER MODEL NO.	SERVICE	TYPE	MAX AIR FLOW RATE (CFM)	MIN AIR FLOW RATE (CFM)	EXTERNAL S.P. (IN. W.C.)	FAN SPEED (RPM)	SONES	DRIVE TYPE	ELECTRICAL DATA			NOTES
										MOTOR BHP	MOTOR HP	VOLTS/ PHASE	
EF-1	GREENHECK BSQ-180-10	TOILETS, LOCKERS, EXERCISE	CENTRIFUGAL, INLINE	3330	3330	0.75	1067	14.0	BELT	0.89	1	460/3φ	1,2,3,4,5,6,7
EF-2	GREENHECK BSQ-140-5	MECH, ELEC, LUBE, BATTERY, GROUNDS	CENTRIFUGAL, INLINE	1685	1685	0.75	1263	12.7	BELT	0.45	1/2	115/1φ	1,2,3,4,5,6,7,9
EF-3	GREENHECK BSQ-140-5	WATER RECYCLING. MECH, LUBE, COMPR.	CENTRIFUGAL, INLINE	1780	1780	0.75	1293	13.3	BELT	0.48	1/2	115/1φ	1,2,3,4,5,6,7
EF-4	GREENHECK BSQ-200-20	CHASSIS WASH	CENTRIFUGAL, INLINE	5407	2405	0.75	1175	21	BELT	1.95	2	460/3φ	1,2,3,4,5,6,7,8,9
EF-5	GREENHECK BSQ-180-20	LOW GARAGE ROOF AREAS	CENTRIFUGAL, INLINE	5020	5020	0.75	1394	20	BELT	1.89	2	460/3φ	1,2,3,4,5,6,7,8,9
EF-6	GREENHECK BSQ-300-50	HIGH GARAGE ROOF AREAS	CENTRIFUGAL, INLINE	12,400	12,400	0.75	791	25	BELT	4.3	5	460/3φ	1,2,3,4,5,6,7,8,9
EF-7	GREENHECK BSQ-300-50	HIGH GARAGE ROOF AREAS	CENTRIFUGAL, INLINE	12,400	12,400	0.75	791	25	BELT	4.3	5	460/3φ	1,2,3,4,5,6,7,8,9
EF-8	GREENHECK BSQ-240-30	BUS WASH	CENTRIFUGAL, INLINE	7850	3640	0.75	923	21	BELT	2.24	3	460/3φ	1,2,3,4,5,6,7,8,9
EF-9	GREENHECK BSQ-140-5	SERVICE AREA	CENTRIFUGAL, INLINE	1670	1670	0.75	1258	12.5	BELT	0.44	1/2	115/1φ	1,2,3,4,5,6,7,8,9
EF-10	GREENHECK BSQ-140-7	SERVICE AREA	CENTRIFUGAL, INLINE	1845	1845	0.75	1313	13.4	BELT	0.51	3/4	115/1φ	1,2,3,4,5,6,7,8,9
EF-11	GREENHECK BSQ-140-5	FUELING AREA	CENTRIFUGAL, INLINE	1425	1425	0.75	1187	10.4	BELT	0.37	1/2	115/1φ	1,2,3,4,5,6,7,8,9
EF-12	GREENHECK BSQ-140-5	FUELING AREA	CENTRIFUGAL, INLINE	1450	1450	0.75	1193	10.6	BELT	0.38	1/2	115/1φ	1,2,3,4,5,6,7,8,9

NOTES:
1. PROVIDE VARIABLE FREQUENCY DRIVE WITH INTEGRAL HAND-OFF-AUTO SELECTION SWITCH AND LOCKABLE DISCONNECT.
2. UNIT TO BE SUSPENDED FROM STRUCTURE. PROVIDE CEILING SUSPENSION SPRING VIBRATION ISOLATORS.
3. PROVIDE SOLID SHAFT WITH ANTI CORROSION COATING AND EXTENDED LUBE LINES.
4. PROVIDE WITH OSHA APPROVED BELT GUARD.
5. PROVIDE INVERTER DUTY PREMIUM EFFICIENCY MOTOR, CLASS F INSULATION.
6. PROVIDE ACOUSTICAL INSULATED HOUSING.
7. PROVIDE FLEXIBLE DUCT CONNECTION AT FAN INLET AND OUTLET.
8. PROVIDE EXPLOSION PROOF MOTOR OUT OF AIR STREAM
9. PROVIDE SPARK RESISTANT CONSTRUCTION, FAN CLASS "A".

LOUVER SCHEDULE (L)

PLAN DESIGNATION	MANUFACTURER MODEL NO.	SERVICE	LOUVER DIMENSION (WxH)	AIR FLOW (CFM)	VELOCITY (FPM)	FREE AREA (SQ. FT.)	SECTIONS WIDE	SECTIONS HIGH	MATERIAL	PATTERN	FINISH	CONTROL DAMPER	NOTES
L-1	GREENHECK ESD-403	EF-1 & EF-2 EXHAUST	54 x 34	5015	830	6.04	1	1	EXTRUDED ALUMINUM	DRAINABLE BLADE	70% KYNAR	GREENHECK ICD-45	1,2,3,4,5,6
L-2	GREENHECK ESD-403	EF-3 & EF-4 EXHAUST	68 x 36	7187	890	8.08	1	1	EXTRUDED ALUMINUM	DRAINABLE BLADE	70% KYNAR	GREENHECK ICD-45	1,2,3,4,5,6
L-3	GREENHECK ESD-403	EF-5 & EF-7 EXHAUST	48 x 128	17,420	760	22.92	1	1	EXTRUDED ALUMINUM	DRAINABLE BLADE	70% KYNAR	GREENHECK ICD-45	1,2,3,4,5,6
L-4	GREENHECK ESD-403	EF-6 EXHAUST	92 x 42	12,400	890	13.93	1	1	EXTRUDED ALUMINUM	DRAINABLE BLADE	70% KYNAR	GREENHECK ICD-45	1,2,3,4,5,6
L-5	GREENHECK ESD-403	EF-8 EXHAUST	52 x 52	7850	849	9.25	1	1	EXTRUDED ALUMINUM	DRAINABLE BLADE	70% KYNAR	GREENHECK ICD-45	1,2,3,4,5,6
L-6	GREENHECK ESD-403	EF-9 EXHAUST	30 x 22	1670	863	1.93	1	1	EXTRUDED ALUMINUM	DRAINABLE BLADE	70% KYNAR	GREENHECK ICD-45	1,2,3,4,5,6
L-7	GREENHECK ESD-403	EF-10 EXHAUST	33 x 22	1845	859	2.15	1	1	EXTRUDED ALUMINUM	DRAINABLE BLADE	70% KYNAR	GREENHECK ICD-45	1,2,3,4,5,6
L-8	GREENHECK ESD-403	EF-11 EXHAUST	30 x 20	1425	784	1.82	1	1	EXTRUDED ALUMINUM	DRAINABLE BLADE	70% KYNAR	GREENHECK ICD-45	1,2,3,4,5,6
L-9	GREENHECK ESD-403	EF-12 EXHAUST	30 x 20	1450	798	1.82	1	1	EXTRUDED ALUMINUM	DRAINABLE BLADE	70% KYNAR	GREENHECK ICD-45	1,2,3,4,5,6
L-10	GREENHECK ESD-403	FCU-1 INTAKE	24 x 12	280	402	0.70	1	1	EXTRUDED ALUMINUM	DRAINABLE BLADE	70% KYNAR	GREENHECK ICD-45	1,2,3,4,5,6
L-11	GREENHECK ESD-403	AHU-1 & AHU-2 INTAKE	72 x 72	8910	473	18.82	1	1	EXTRUDED ALUMINUM	DRAINABLE BLADE	70% KYNAR	GREENHECK ICD-45	1,2,3,4,5,6
L-12	GREENHECK ESD-403	RAF-1 EXHAUST	64 x 42	7440	802	9.27	1	1	EXTRUDED ALUMINUM	DRAINABLE BLADE	70% KYNAR	GREENHECK ICD-45	1,2,3,4,5,6

NOTES:
1. ARCHITECT TO SELECT COLOR.
2. PROVIDE 1/2"x1/2" BIRD SCREEN.
3. PROVIDE THERMALLY INSULATED, 2-POSITION MOTORIZED DAMPER AND ACTUATOR.
4. CAULK ALL SIDES WEATHER TIGHT.
5. CONTRACTOR SHALL FIELD VERIFY ALL WALL OPENINGS PRIOR TO ORDERING LOUVER.
6. LOUVER TO BE PROVIDED WITH OPTIONAL MOUNTING FLANGES ON ALL FOUR SIDES.

FINNED TUBE CONVECTOR SCHEDULE (FTC)

PLAN DESIGNATION	MANUFACTURER MODEL NO.	LOCATION	ROWS	ELEMENT LENGTH (FT)	ENCLOSURE LENGTH (FT)	ENCLOSURE TYPE	CAPACITY (MBH)	EWT/LWT (°F)	FLOW RATE (GPM)	WPD (FT HD)	ENCLOSURE HEIGHT (IN)	NOTES
FTC-1	RITTLING IBG5 1C-41/4X41/4-32	VEST A100	2	10	10.5	16 GAGE STEEL	12.4	180/130	7.5	0.41	24	1,2,3
FTC-2	RITTLING IBG5 3/4C-23/4X4-32	VESTIBULE A131	1	8	10.5	16 GAGE STEEL	4.6	180/130	4.2	0.33	14	1,2,3
FTC-3	RITTLING IBG5 3/4C-23/4X4-32	VESTIBULE A141	2	9	10	16 GAGE STEEL	7.5	180/130	4.2	0.37	20	1,2,3
FTC-4	RITTLING FS5 3/4C-23/4X4-40	SERVICE CONTROL M126	1	2	2	16 GAGE STEEL	1.2	180/130	4.7	0.08	14	1,2,3
FTC-5	RITTLING FS5 3/4C-23/4X4-40	SERVICE STORAGE M127	1	2	2	16 GAGE STEEL	1.2	180/130	4.7	0.08	14	1,2,3

NOTES:
1. PROVIDE POWDER COATED FINISH, COLOR SELECTED BY ARCHITECT.
2. PROVIDE ADJUSTABLE DAMPER.
3. PROVIDE 6"x6" ACCESS DOOR FOR VALVE ACCESS.

CABINET UNIT HEATER SCHEDULE (CUH)

PLAN DESIGNATION	MANUFACTURER MODEL NO.	LOCATION	COIL ROWS	ENCLOSURE TYPE/SIZE	CAPACITY (MBH)	EWT/LWT (°F)	EAT/LAT (°F)	FLOW RATE (GPM)	PRESSURE DROP (FT. HD.)	MOTOR HP	VOLTS/ PHASE	NOTES
CUH-1	RITTLING RC-380-03	CORRIDOR M11	1	EXPOSED CEILING	17.2	180/130	60/102.9	17.2	0.01	1/30	115/1φ	1,2
CUH-2	RITTLING RC-380-02	CORRIDOR M11	1	EXPOSED CEILING	8.2	180/130	60/87.3	0.2	0.01	1/40	115/1φ	1,2
CUH-3	RITTLING RC-380-02	CORRIDOR M11	1	EXPOSED CEILING	8.2	180/130	60/87.3	0.2	0.01	1/40	115/1φ	1,2
CUH-4	RITTLING RC-380-02	CORRIDOR M14	1	EXPOSED CEILING	8.2	180/130	60/87.3	0.2	0.01	1/40	115/1φ	1,2

NOTES:
1. UNIT TO BE SUSPENDED FROM STRUCTURE. PROVIDE CEILING SUSPENSION RUBBER IN SHEAR VIBRATION ISOLATORS.
2. PROVIDE LOCKABLE DISCONNECT SWITCH.

EXPANSION TANK SCHEDULE (ET)

PLAN DESIGNATION	MANUFACTURER MODEL NO.	LOCATION	TANK TYPE	TANK VOLUME (GAL.)	ACCEPTANCE VOLUME (GAL.)	OPERATING PRESSURE (PSI)	DESIGN TEMP (°F)	HEIGHT (IN.)	DIAMETER (IN.)	INLET (IN.)	APRROX SYS VOLUME (GAL)	NOTES
ET-1	TACO CA215-125	MECHANICAL M134	DIAPHRAGM	67	27	18	102	61.5	20.5	3/4	1000	1,2,3,4,5,6

NOTES:
1. MAX OPERATING PRESSURE OF 30 PSI
2. PROVIDE WITH MOUNTING STAND
3. ASME RATED
4. PROVIDE SIGHT GLASS
5. INSTALL PER MANUFACTURERS RECOMMENDATIONS.
6. PROVIDE REPLACEABLE HEAVY DUTY BUTYL RUBBER BLADDER.

UNIT HEATER SCHEDULE (UH)

PLAN DESIGNATION	MANUFACTURER MODEL NO.	LOCATION	AIR FLOW RATE (CFM)	HOT WATER COIL					ELECTRICAL DATA			NOTES
				CAPACITY (MBH)	EAT/LAT (°F)	EWT/LWT (°F)	FLOW RATE (GPM)	WPD (FT. HD.)	MOTOR HP	MOTOR RPM	VOLTS/ PHASE	
UH-1	RITTLING RH-18	PARTS STORAGE M123	400	8.0	60/78.8	180/137.2	0.39	0.07	1/30	1550	115/1φ	1,2,3,4
UH-2	RITTLING RH-18	PARTS STORAGE M123	400	8.0	60/78.8	180/137.2	0.39	0.07	1/30	1550	115/1φ	1,2,3,4
UH-3	RITTLING RH-18	PARTS STORAGE M123	400	8.0	60/78.8	180/137.2	0.39	0.07	1/30	1550	115/1φ	1,2,3,4
UH-4	RITTLING RH-18	PARTS STORAGE M123	400	8.0	60/78.8	180/137.2	0.39	0.07	1/30	1550	115/1φ	1,2,3,4
UH-5	RITTLING RH-18	PARTS STORAGE M123	400	8.0	60/78.8	180/137.2	0.39	0.07	1/30	1550	115/1φ	1,2,3,4
UH-6	RITTLING RH-18	TIRE STORAGE M124	400	8.0	60/78.8	180/130	0.39	0.07	1/30	1550	115/1φ	1,2,3,4
UH-7	RITTLING RH-18	TIRE STORAGE M124	400	8.0	60/78.8	180/130	0.39	0.07	1/30	1550	115/1φ	1,2,3,4
UH-8	RITTLING RH-63	BATTERY M121	1120	28.7	60/84.2	180/137.6	1.41	0.07	1/10	1550	115/1φ	1,2,3,4
UH-9	RITTLING RH-63	GROUNDS M120	1120	28.7	60/84.2	180/137.6	1.41	0.07	1/10	1550	115/1φ	1,2,3,4
UH-10	RITTLING RH-33	LUBE ROOM M118	630	15.1	60/82.6	180/138.0	0.75	0.02	1/15	1550	115/1φ	1,2,3,4
UH-11	RITTLING RH-33	LUBE ROOM M118	630	15.1	60/82.6	180/138.0	0.75	0.02	1/15	1550	115/1φ	1,2,3,4
UH-12	RITTLING RH-63	ELEC RM M117	1120	28.7	60/84.2	180/137.6	1.41	0.07	1/10	1550	115/1φ	1,2,3,4
UH-13	RITTLING RH-33	MECH RM M116	630	15.1	60/82.6	180/138.0	0.75	0.02	1/15	1550	115/1φ	1,2,3,4
UH-14	RITTLING RH-33	MECH RM M116	630	15.1	60/82.6	180/138.0	0.75	0.02	1/15	1550	115/1φ	1,2,3,4
UH-15	RITTLING RH-18	TOOL STORAGE 3 M103	400	8.0	60/78.8	180/137.2	0.39	0.07	1/30	1550	115/1φ	1,2,3,4
UH-16	RITTLING RH-18	TOOL STORAGE 1 M101	400	8.0	60/78.8	180/137.2	0.39	0.07	1/30	1550	115/1φ	1,2,3,4
UH-17	RITTLING RH-18	COMMON WORK AREA M113	400	8.0	60/78.8	180/137.2	0.39	0.07	1/30	1550	115/1φ	1,2,3,4
UH-18	RITTLING RH-18	COMMON WORK AREA M113	400	8.0	60/78.8	180/137.2	0.39	0.07	1/30	1550	115/1φ	1,2,3,4
UH-19	RITTLING RH-18	VACUUM M128	400	8.0	60/78.8	180/130	0.39	0.07	1/30	1550	115/1φ	1,2,3,4
UH-20	RITTLING RH-18	COMPRESSOR RM M133	400	8.0	60/78.8	180/130	0.39	0.07	1/30	1550	115/1φ	1,2,3,4
UH-21	RITTLING RH-18	MECH RM M134	400	8.0	60/78.8	180/130	0.39	0.07	1/30	1550	115/1φ	1,2,3,4
UH-22	RITTLING RH-18	WATER RECYCLING M135	400	8.0	60/78.8	180/130	0.39	0.07	1/30	1550	115/1φ	1,2,3,4
UH-23	RITTLING RH-18	WATER RECYCLING M135	400	8.0	60/78.8	180/130	0.39	0.07	1/30	1550	115/1φ	1,2,3,4
UH-24	RITTLING RH-18	FIRE PUMP ROOM M135A	400	8.0	60/78.8	180/130	0.39	0.07	1/30	1550	115/1φ	1,2,3,4
UH-25	RITTLING RH-33	CHASSIS WASH M1	630	15.1	60/82.6	180/138.0	0.75	0.02	1/15	1550	115/1φ	1,2,3,4
UH-26	RITTLING RH-33	CHASSIS WASH M1	630	15.1	60/82.6	180/138.0	0.75	0.02	1/15	1550	115/1φ	1,2,3,4
UH-27	RITTLING RH-33	CHASSIS WASH M1	630	15.1	60/82.6	180/138.0	0.75	0.02	1/15	1550	115/1φ	1,2,3,4
UH-28	RITTLING RH-33	CHASSIS WASH M1	630	15.1	60/82.6	180/138.0	0.75	0.02	1/15	1550	115/1φ	1,2,3,4
UH-29	RITTLING RV-95	BUS WASH AREA	1775	43.8	60/83.3	180/137.7	2.16	0.09	1/6	1550	115/1φ	1,2,3,4
UH-30	RITTLING RV-95	BUS WASH AREA	1775	43.8	60/83.3	180/137.7	2.16	0.09	1/6	1550	115/1φ	1,2,3,4
UH-31	RITTLING RH-47	BUS WASH AREA	730	20.9	60/87.1	180/137.4	1.02	0.03	1/15	1550	115/1φ	1,2,3,4
UH-32	RITTLING RH-47	BUS WASH AREA	730	20.9	60/87.1	180/137.4	1.02	0.03	1/15	1550	115/1φ	1,2,3,4
UH-33	RITTLING RH-33	SERVICE AREA	630	15.1	60/82.6	180/138.0	0.75	0.02	1/15	1550	115/1φ	1,2,3,4
UH-34	RITTLING RH-33	SERVICE AREA	630	15.1	60/82.6	180/138.0	0.75	0.02	1/15	1550	115/1φ	1,2,3,4
UH-35	RITTLING RH-33	SERVICE AREA	630	15.1	60/82.6	180/138.0	0.75	0.02	1/15	1550	115/1φ	1,2,3,4
UH-36	RITTLING RH-33	SERVICE AREA	630	15.1	60/82.6	180/138.0	0.75	0.02	1/15	1550	115/1φ	1,2,3,4
UH-37	RITTLING RV-78	FUELING AREA	1550	35.5	60/81.5	180/138.9	1.80	0.06	1/6	1550	115/1φ	1,2,3,4
UH-38	RITTLING RV-78	FUELING AREA	1550	35.5	60/81.5	180/138.9	1.80	0.06	1/6	1550	115/1φ	1,2,3,4
UH-39	RITTLING RH-86	GARAGE AREA	1340	38.2	60/87.1	180/137.2	1.86	0.11	1/10	1550	115/1φ	1,2,3,4
UH-40	RITTLING RH-86	GARAGE AREA	1340	38.2	60/87.1	180/137.2	1.86	0.11	1/10	1550	115/1φ	1,2,3,4
UH-41	RITTLING RH-86	GARAGE AREA	1340	38.2	60/87.1	180/137.2	1.86	0.11	1/10	1550	115/1φ	1,2,3,4
UH-42	RITTLING RH-86	GARAGE AREA	1340	38.2	60/87.1	180/137.2	1.86	0.11	1/10	1550	115/1φ	1,2,3,4
UH-43	RITTLING RH-86	GARAGE AREA	1340	38.2	60/87.1	180/137.2	1.86	0.11	1/10	1550	115/1φ	1,2,3,4
UH-44	RITTLING RH-86	GARAGE AREA	1340	38.2	60/87.1	180/137.2	1.86	0.11	1/10	1550	115/1φ	1,2,3,4
UH-45	RITTLING RH-86	GARAGE AREA	1340	38.2	60/87.1	180/137.2	1.86	0.11	1/10	1550	115/1φ	1,2,3,4

NOTES:
1. PROVIDE FAN GUARD.
2. PROVIDE SPRING MOUNTED HORIZONTAL LOUVERS.
3. PROVIDE COPPER HEAT EXCHANGER TUBES WITH ALUMINUM FINS.
4. PROVIDE LOCKABLE DISCONNECT SWITCH

REHEAT COIL SCHEDULE (RHC)

PLAN DESIGNATION	MANUFACTURER MODEL NO.	LOCATION	CAPACITY (MBH)	AIR SIDE				WATER SIDE				ROWS DEEP	FIN HEIGHT x FIN LENGTH	MAX FACE VELOCITY (FPM)	NOTES
				AIR FLOW (CFM)	EAT (°F)	LAT (°F)	AIR ΔP (IN. WG)	FLOW (GPM)	EWT (°F)	LWT (°F)	WATER ΔP (FT HD.)				
RHC-1	SFI COILS	TIRE STORAGE M124	501.96	23,320	70	91.8	0.23	20.5	180	130	1.99	1	42" x 80"	913.7	X

NOTES:

AIR/DIRT SEPARATOR SCHEDULE (AS)

PLAN DESIGNATION	MANUFACTURER MODEL No.	LOCATION	CAPACITY (GPM)	INLET/OUTLET SIZE (IN.)	HEIGHT (IN.)	DIAMETER (IN.)	STRAINER FREE AREA	NOTES
AS-1	TACO 4903AD-125	MECH RM M134	127	3	25⅛	12	22	1,2

NOTES:
1. AIR/DIRT SEPARATOR SHALL BE ASME RATED.

GREATER LYNCHBURG TRANSIT COMPANY
1301 Kemper Street PO Box 797
Lynchburg, VA 24505-0797

PROJECT ADDRESS:
419 Bradley Dr.
Lynchburg, VA
24501-4901

Operations & Maintenance Facility

BID DOCUMENTS

wendel
1420 King Street, Suite 510
Alexandria, VA 22314
www.wendelcompanies.com
p:703.299.8718 f:703.299.8719
ALEXANDRIA ARCHITECTURE, ENGINEERING, LAND SURVEYING & LANDSCAPE ARCHITECTS, INC

Wiley|Wilson Constant Progress
127 Nationwide Drive, Lynchburg, Virginia 24502-4272
phone 434.947.1901 | fax 434.947-1601 | web wileywilson.com

Civil · Stormwater · Traffic · Transportation
WBE/DBE
E&PR
"ENGINEERING & PLANNING RESOURCES"
637 BERKMAR CIRCLE, CHARLOTTESVILLE, VA 22901
434.202.5082. www.epr-corp.com

NOTE:
THIS DOCUMENT, AND THE IDEAS AND DESIGNS INCORPORATED HEREIN, AS AN INSTRUMENT OF PROFESSIONAL SERVICE, IS THE PROPERTY OF THE ARCHITECT AND ENGINEER AND IS NOT TO BE USED IN WHOLE OR IN PART, FOR ANY OTHER PROJECT WITHOUT THE WRITTEN AUTHORIZATION OF THE ARCHITECT AND ENGINEER. UNAUTHORIZED ALTERATION OR ADDITION TO ANY SURVEY DRAWING, DESIGN, SPECIFICATION, PLAN OR REPORT IS PROHIBITED IN ACCORDANCE WITH STATE LAW, CODE AND RULES.

COMMONWEALTH OF VIRGINIA
RAYMOND F. JOHNSON, II
Lic. No. 042235
PROFESSIONAL ENGINEER

Revision Number	Issued by	Revision Description	Revision Date

DWG. TITLE

HVAC SCHEDULES

DATE 09/24/2014
SCALE AS NOTED
DWN. GMM CHK. CRL
PROJ. No. 444505
DWG. No.

H302

DATE/TIME PRINTED: 9/24/2014 6:49:56 AM FILEPATH: P:\444505 GLTC OM SCHEMATIC DESIGN\16. CAD\DWG\HVAC\COMPOSITE\H302

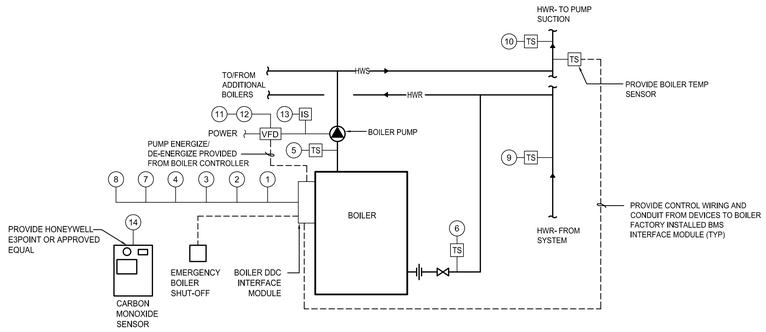

CONTROL POINTS LIST	HARDWARE				SOFTWARE		
	OUTPUT		INPUT		ALARMS		BMS FUNCTION
SYSTEM: BOILERS & PUMP	DIGITAL	ANALOG	DIGITAL	ANALOG	DIGITAL	ANALOG	
POINT DESCRIPTION (X)	RELAY SOLENOID CONTACTOR E.P.	PNEUMATIC TRANSDUCER ELECTRIC TRANSDUCER 4-20ma	TEMPERATURE PRESSURE CURRENT STATUS AUXILIARY CONTACT	TEMPERATURE PRESSURE CURRENT STATUS AUXILIARY CONTACT	EQUIPMENT STATUS MAINTENANCE ALARM FAILURE	HIGH LIMIT LOW LIMIT ALARM FAILURE	SYSTEM HAND EXCHANGE TEMPERATURE SETPOINT ENERGY LIMITING TEMPERATURE CONTROL OPTIMIZE CONTROL EMERGENCY SHUTDOWN HOT WATER PUMP PURGE WITH DELAY SPEED BALANCING SETPOINT FAN SUBNET ALARM SUMMARY COLOR GRAPHICS
1. BOILER FIRING RATE STATUS							• •
2. LOOP SUPPLY TEMERPATURE SETPOINT		•					• •
3. ALARM					• •		• •
4. BOILER OPERATION STATUS				•			• •
5. HOT WATER SUPPLY TEMPERATURE						• •	• •
6. HOT WATER RETURN TEMPERATURE						• •	• •
7. HEATING PLANT ENABLE/DISABLE	•						• •
8. EMERGENCY BOILER SHUT-OFF	•				•		• •
9 HOT WATER PRIMARY LOOP RETURN TEMPERATURE						• •	• •
10. HOT WATER PRIMARY LOOP SUPPLY TEMPERATURE						• •	• •
11. PUMP ALARM				•	•		• •
12. PUMP SPEED							• •
13. PUMP STATUS					•		• •
14. CARBON MONOXIDE SENSOR	•				•		• •

1 BOILER (B-1,2,3) & BOILER PUMPS (P-3,4,5)
SCALE: NTS

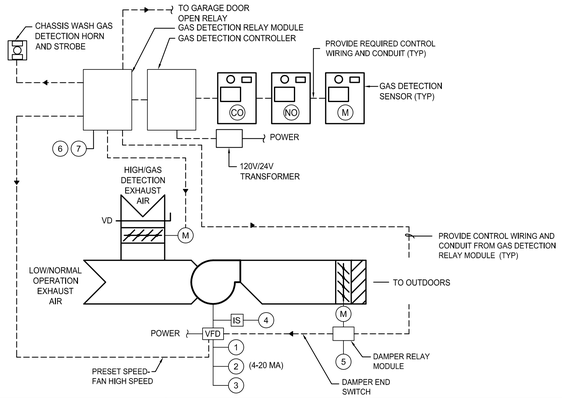

CONTROL POINTS LIST	HARDWARE				SOFTWARE		
	OUTPUT		INPUT		ALARMS		BMS FUNCTION
SYSTEM: EXHAUST FAN	DIGITAL	ANALOG	DIGITAL	ANALOG	DIGITAL	ANALOG	
POINT DESCRIPTION (X)	RELAY SOLENOID CONTACTOR E.P.	PNEUMATIC TRANSDUCER ELECTRIC TRANSDUCER 4-20ma	TEMPERATURE PRESSURE CURRENT STATUS AUXILIARY CONTACT	TEMPERATURE PRESSURE RELATIVE HUMIDITY CURRENT FLOW	EQUIPMENT STATUS MAINTENANCE ALARM FAILURE	HIGH LIMIT LOW LIMIT ALARM FAILURE	SCHEDULED START/STOP OPTIMUM START/STOP ENERGY LIMITING DAYLIGHT SETBACK SPEED CONTROL - LOW SPEED HEATING LOCKOUT RESET INITIALIZE P DISCHARGE AIR RESET HOT WATER BOILER OA COOLING INTERLOCK CHILLER WATER RESET CONDENSER WATER RESET MONITOR COLOR GRAPHICS
1. FAN STOP/START	•						• •
2. FAN ALARM					•		• •
3. FAN SPEED			•				• •
4. FAN STATUS				•	•		• •
5. MOTORIZED DAMPER WITH END SWITCH	•						• •
6. GAS DETECTION LOW LEVEL ALARM				•	•		• •
7. GAS DETECTION MID LEVEL ALARM				•	•		• •
8. GAS DETECTION HIGH LEVEL ALARM				•	•		• •
9. GAS DETECTION FAULT				•	•		• •

2 EXHAUST FAN (EF-4)
SCALE: NTS

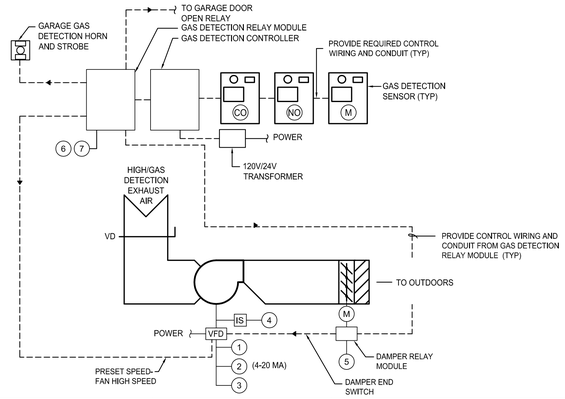

CONTROL POINTS LIST	HARDWARE				SOFTWARE		
	OUTPUT		INPUT		ALARMS		BMS FUNCTION
SYSTEM: EXHAUST FAN	DIGITAL	ANALOG	DIGITAL	ANALOG	DIGITAL	ANALOG	
POINT DESCRIPTION (X)	RELAY SOLENOID CONTACTOR E.P.	PNEUMATIC TRANSDUCER ELECTRIC TRANSDUCER 4-20ma	TEMPERATURE PRESSURE CURRENT STATUS AUXILIARY CONTACT	TEMPERATURE PRESSURE RELATIVE HUMIDITY CURRENT FLOW	EQUIPMENT STATUS MAINTENANCE ALARM FAILURE	HIGH LIMIT LOW LIMIT ALARM FAILURE	SCHEDULED START/STOP OPTIMUM START/STOP ENERGY LIMITING DAYLIGHT SETBACK SPEED CONTROL - LOW SPEED HEATING LOCKOUT RESET INITIALIZE P DISCHARGE AIR RESET HOT WATER BOILER OA COOLING INTERLOCK CHILLER WATER RESET CONDENSER WATER RESET MONITOR COLOR GRAPHICS
1. FAN STOP/START	•						• •
2. FAN ALARM					•		• •
3. FAN SPEED			•				• •
4. FAN STATUS				•	•		• •
5. MOTORIZED DAMPER WITH END SWITCH	•						• •
6. GAS DETECTION LOW LEVEL ALARM				•	•		• •
7. GAS DETECTION MID LEVEL ALARM				•	•		• •
8. GAS DETECTION HIGH LEVEL ALARM				•	•		• •
9. GAS DETECTION FAULT				•	•		• •

3 EXHAUST FAN (EF-5,6,7)
SCALE: NTS

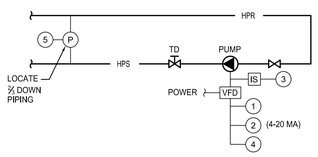

CONTROL POINTS LIST	HARDWARE				SOFTWARE		
	OUTPUT		INPUT		ALARMS		BMS FUNCTION
SYSTEM: PUMP- VARIABLE SPEED	DIGITAL	ANALOG	DIGITAL	ANALOG	DIGITAL	ANALOG	
POINT DESCRIPTION (X)	RELAY SOLENOID CONTACTOR E.P.	PNEUMATIC TRANSDUCER ELECTRIC TRANSDUCER 4-20ma	TEMPERATURE PRESSURE CURRENT STATUS AUXILIARY CONTACT	TEMPERATURE PRESSURE RELATIVE HUMIDITY CURRENT FLOW	EQUIPMENT STATUS MAINTENANCE PUMP OPERATING	HIGH LIMIT LOW LIMIT ALARM FAILURE	SCHEDULED START/STOP OPTIMUM START/STOP SPEED CONTROL DAYLIGHT SETBACK ENERGY LIMITING TEMPERATURE CONTROL INITIALIZE P DISCHARGE AIR RESET HOT WATER BOILER OA COOLING INTERLOCK CHILLER WATER RESET CONDENSER WATER RESET FAN SUBNET ALARM SUMMARY COLOR GRAPHICS
1. PUMP STOP/START	•				•		• •
2. SPEED			•			•	• •
3. STATUS				•	•		• •
4. ALARM				•	•		• •
5. DIFFERENTIAL PRESSURE SENSOR				•		•	• •

4 PUMPS (P-1,2)
SCALE: NTS

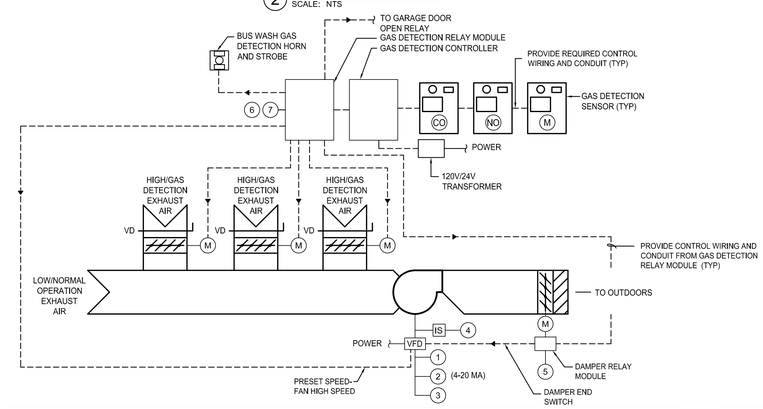

CONTROL POINTS LIST	HARDWARE				SOFTWARE		
	OUTPUT		INPUT		ALARMS		BMS FUNCTION
SYSTEM: EXHAUST FAN	DIGITAL	ANALOG	DIGITAL	ANALOG	DIGITAL	ANALOG	
POINT DESCRIPTION (X)	RELAY SOLENOID CONTACTOR E.P.	PNEUMATIC TRANSDUCER ELECTRIC TRANSDUCER 4-20ma	TEMPERATURE PRESSURE CURRENT STATUS AUXILIARY CONTACT	TEMPERATURE PRESSURE RELATIVE HUMIDITY CURRENT FLOW	EQUIPMENT STATUS MAINTENANCE ALARM FAILURE	HIGH LIMIT LOW LIMIT ALARM FAILURE	SCHEDULED START/STOP OPTIMUM START/STOP ENERGY LIMITING DAYLIGHT SETBACK SPEED CONTROL - LOW SPEED HEATING LOCKOUT RESET INITIALIZE P DISCHARGE AIR RESET HOT WATER BOILER OA COOLING INTERLOCK CHILLER WATER RESET CONDENSER WATER RESET MONITOR COLOR GRAPHICS
1. FAN STOP/START	•						• •
2. FAN ALARM					•		• •
3. FAN SPEED			•				• •
4. FAN STATUS				•	•		• •
5. MOTORIZED DAMPER WITH END SWITCH	•						• •
6. GAS DETECTION LOW LEVEL ALARM				•	•		• •
7. GAS DETECTION MID LEVEL ALARM				•	•		• •
8. GAS DETECTION HIGH LEVEL ALARM				•	•		• •
9. GAS DETECTION FAULT				•	•		• •

5 EXHAUST FAN (EF-8)
SCALE: NTS

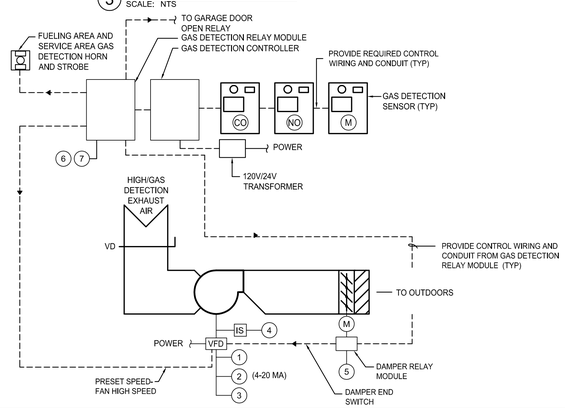

CONTROL POINTS LIST	HARDWARE				SOFTWARE		
	OUTPUT		INPUT		ALARMS		BMS FUNCTION
SYSTEM: EXHAUST FAN	DIGITAL	ANALOG	DIGITAL	ANALOG	DIGITAL	ANALOG	
POINT DESCRIPTION (X)	RELAY SOLENOID CONTACTOR E.P.	PNEUMATIC TRANSDUCER ELECTRIC TRANSDUCER 4-20ma	TEMPERATURE PRESSURE CURRENT STATUS AUXILIARY CONTACT	TEMPERATURE PRESSURE RELATIVE HUMIDITY CURRENT FLOW	EQUIPMENT STATUS MAINTENANCE ALARM FAILURE	HIGH LIMIT LOW LIMIT ALARM FAILURE	SCHEDULED START/STOP OPTIMUM START/STOP ENERGY LIMITING DAYLIGHT SETBACK SPEED CONTROL - LOW SPEED HEATING LOCKOUT RESET INITIALIZE P DISCHARGE AIR RESET HOT WATER BOILER OA COOLING INTERLOCK CHILLER WATER RESET CONDENSER WATER RESET MONITOR COLOR GRAPHICS
1. FAN STOP/START	•						• •
2. FAN ALARM					•		• •
3. FAN SPEED			•				• •
4. FAN STATUS				•	•		• •
5. MOTORIZED DAMPER WITH END SWITCH	•						• •
6. GAS DETECTION LOW LEVEL ALARM				•	•		• •
7. GAS DETECTION MID LEVEL ALARM				•	•		• •
8. GAS DETECTION HIGH LEVEL ALARM				•	•		• •
9. GAS DETECTION FAULT				•	•		• •

6 EXHAUST FAN (EF-9,10,11,12)
SCALE: NTS

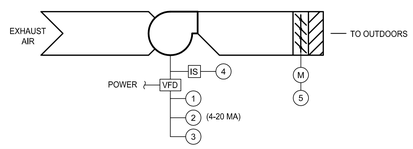

CONTROL POINTS LIST	HARDWARE				SOFTWARE		
	OUTPUT		INPUT		ALARMS		BMS FUNCTION
SYSTEM: EXHAUST FAN	DIGITAL	ANALOG	DIGITAL	ANALOG	DIGITAL	ANALOG	
POINT DESCRIPTION (X)	RELAY SOLENOID CONTACTOR E.P.	PNEUMATIC TRANSDUCER ELECTRIC TRANSDUCER 4-20ma	TEMPERATURE PRESSURE CURRENT STATUS AUXILIARY CONTACT	TEMPERATURE PRESSURE RELATIVE HUMIDITY CURRENT FLOW	EQUIPMENT STATUS MAINTENANCE ALARM FAILURE	HIGH LIMIT LOW LIMIT ALARM FAILURE	SCHEDULED START/STOP OPTIMUM START/STOP ENERGY LIMITING DAYLIGHT SETBACK SPEED CONTROL - LOW SPEED HEATING LOCKOUT RESET INITIALIZE P DISCHARGE AIR RESET HOT WATER BOILER OA COOLING INTERLOCK CHILLER WATER RESET CONDENSER WATER RESET MONITOR COLOR GRAPHICS
1. FAN STOP/START	•						• •
2. FAN ALARM					•		• •
3. FAN STATUS					•		• •
4. MOTORIZED DAMPER WITH END SWITCH	•						• •
5. GAS DETECTION FAULT					•		• •

7 EXHAUST FAN (EF-1,2,3)
SCALE: NTS

CONTROL POINTS LIST	HARDWARE				SOFTWARE		
	OUTPUT		INPUT		ALARMS		BMS FUNCTION
SYSTEM: MISCELLANEOUS CONTROL POINTS	DIGITAL	ANALOG	DIGITAL	ANALOG	DIGITAL	ANALOG	
POINT DESCRIPTION (X)	RELAY SOLENOID CONTACTOR E.P.	PNEUMATIC TRANSDUCER ELECTRIC TRANSDUCER 4-20ma	TEMPERATURE PRESSURE CURRENT STATUS SWITCH CONTACT AUXILIARY CONTACT	TEMPERATURE RELATIVE HUMIDITY CURRENT FLOW	SPEED REFERENCE EQUIPMENT STATUS MAINTENANCE PUMP OPERATING	HIGH LIMIT LOW LIMIT ALARM FAILURE	SCHEDULED START/STOP OPTIMUM START/STOP SPEED CONTROL DAYLIGHT SETBACK ENERGY LIMITING TEMPERATURE CONTROL HEATING CONTROL RESET INITIALIZE P HOT WATER BOILER OA COOLING INTERLOCK CHILLER WATER RESET CONDENSER WATER RESET FAN SUBNET ALARM SUMMARY COLOR GRAPHICS
1. EXPANSION TANK			•		•	•	• •
2. SPACE SENSOR RM IT A127						• •	• •
3. SPACE SENSOR IT RM M129						• •	• •
4. SPACE SENSOR RM M125						• •	• •

8 MISCELLANEOUS CONTROL POINTS
SCALE: NTS

GLTC
GREATER LYNCHBURG TRANSIT COMPANY
1301 Kemper Street PO Box 797
Lynchburg, VA 24505-0797

PROJECT ADDRESS:
419 Bradley Dr.
Lynchburg, VA
24501-4901

Operations & Maintenance Facility

BID DOCUMENTS

wendel
1420 King Street, Suite 510
Alexandria, VA 22314
www.wendelcompanies.com
p:703.299.8718 f:703.299.8719
ALEXANDRIA ARCHITECTURE, ENGINEERING, LAND SURVEYING & LANDSCAPE ARCHITECTS, INC

Wiley|Wilson
Constant Progress
127 Nationwide Drive, Lynchburg, Virginia 24502-4272
phone 434.947.7777 | fax 434.947.1377 | web wileywilson.com

Civil · Stormwater · Traffic · Transportation
WBE/DBE
EPR
"Engineering & Planning Resources"
637 Berkshire Circle, Charlottesville, VA 22901
434.202.5082 www.epr-corp.com

NOTE:
THIS DOCUMENT, AND THE IDEAS AND DESIGNS INCORPORATED HEREIN, AS AN INSTRUMENT OF PROFESSIONAL SERVICE, IS THE PROPERTY OF THE ARCHITECT AND ENGINEER AND IS NOT TO BE USED IN WHOLE OR IN PART FOR ANY OTHER PROJECT WITHOUT THE WRITTEN AUTHORIZATION OF THE ARCHITECT AND ENGINEER.
ALL REPORTS, PLANS, OR SPECIFICATIONS PREPARED FOR THE PROJECT NAMED ON THIS DOCUMENT, SPECIFICATION, PLAN, OR REPORT IS PROHIBITED IN ACCORDANCE WITH STATE LAW, CODE AND RULES.

COMMONWEALTH OF VIRGINIA
DAMOND F. JOHNSON, II
Lic. No. 0402235
PROFESSIONAL ENGINEER

Revision Number	Issued by	Revision Description	Revision Date

DWG. TITLE

HVAC CONTROL DIAGRAMS

DATE	09/24/2014
SCALE	AS NOTED
DWN.	GMM
CHK.	CRL
PROJ. No.	444505
DWG. No.	

H401

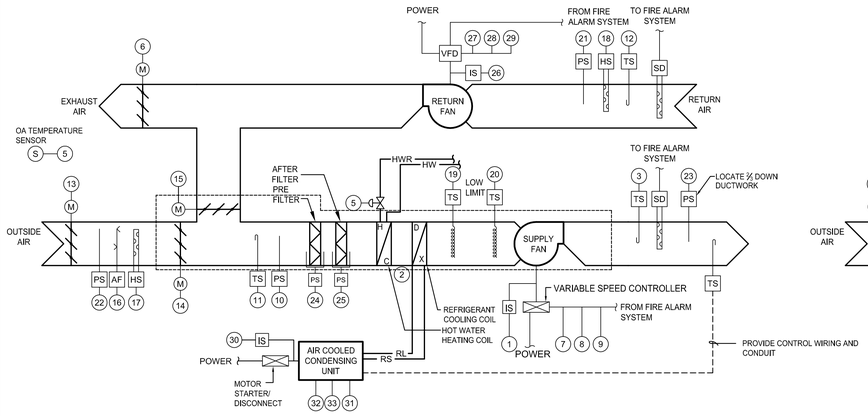

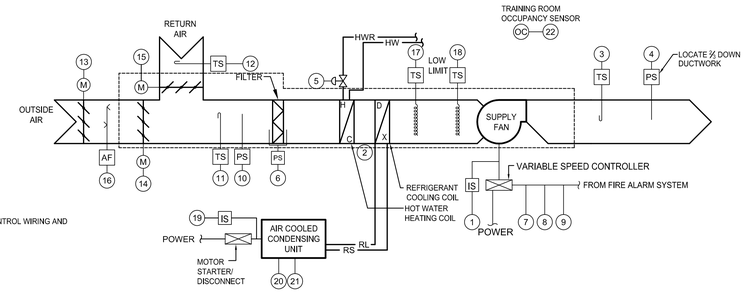

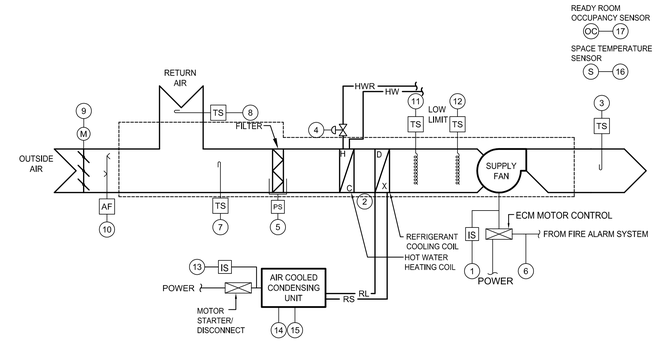

CONTROL POINTS LIST

SYSTEM: AIR HANDLING UNIT AND RELIEF AIR FAN

| POINT DESCRIPTION (X) | HARDWARE OUTPUT DIGITAL: RELAY | SOLENOID | CONTACTOR | E.P. | HARDWARE OUTPUT ANALOG: PNEUMATIC TRANSDUCER | ELECTRIC TRANSDUCER | 4-20ma | HARDWARE INPUT DIGITAL: TEMPERATURE | PRESSURE | CURRENT STATUS | SWITCH STATUS | AUXILIARY CONTACT | HARDWARE INPUT ANALOG: TEMPERATURE | PRESSURE | RELATIVE HUMIDITY | FLOW | CO2 | SOFTWARE ALARMS DIGITAL: EQUIPMENT STATUS | MAINTENANCE | FAILURE | SOFTWARE ALARMS ANALOG: HIGH LIMIT | LOW LIMIT | RUN TIME | FAILURE | SOFTWARE BMS FUNCTION: SCHEDULES START/STOP | OPTIMUM START/STOP | UNIT ENABLE/DISABLE | DAYLIGHT SETBACK | LAYOUT SETBACK | VENTILATION | TEMPERATURE CONTROL | HEAT PUMP CONTROL | RETURN AIR RESET | ENTHALPY | FILTER PRESSURE | STATIC PRESSURE | SUPPLY FLOW | RETURN FLOW | MONITOR | COLOR GRAPHICS
|---|---|---|---|---|---|---|---|---|---|---|---|---|---|---|---|---|---|---|---|---|---|---|---|---|---|---|---|---|---|---|---|---|---|---|---|---|---|---|---|---|---|---|---|---|
| 1. SUPPLY FAN STATUS | | | | | | | | | | | | | | | | • | | | | | | | | | • | | | | | | | | | | | | | | | | | | | • | • |
| 2. CONDENSATE ALARM | | | | | | | | | | | | • | | | | | | | | • | | | | | | | | | | | | | | | | | | | | | | | • | • |
| 3. DISCHARGE TEMPERATURE | | | | | | | | | | | | | | | • | | | | | | | • | • | | | | | | | | | • | | | | | | | | | | | | • |
| 4. OUTDOOR AIR TEMPERATURE | | | | | | | | | | | | | | | • | | | | | | | | | | | | | | | | • | | | | | | | | | | | | | • |
| 5. HOT WATER CONTROL VALVE | | | | | • | | | | | | | | | | | | | | | | | | | | | | | | | | | • | | | | | | | | | | | | • |
| 6. EXHAUST AIR DAMPER WITH END SWITCH | • | | | | | | | | | | | • | | | | | | | | • | | | | | | | | | | | • | | | | | | | | | | | | | • |
| 7. SUPPLY FAN SPEED | | | | | • | | | | | | | | | | | | | | | | | | | | | | | | | | | • | | | | | | | | | | | | • |
| 8. SUPPLY FAN START/STOP | • | | | | | | | | | | | | | | | | | | | | | | | | | • | | | | | | | | | | | | | | | | | | • |
| 9. SUPPLY FAN ALARM | | | | | | | | | | | | • | | | | | | | | • | | | | | | | | | | | | | | | | | | | | | | | • | • |
| 10. MIXED AIR PLENUM PRESSURE | | | | | | | | | | | | | | | | • | | | | | | | | | | | | | | | | | | | | | | | | | | | | • |
| 11. MIXED AIR TEMPERATURE | | | | | | | | | | | | | | | • | | | | | | | | | | | | | | | | • | | | • | | | | | | | | | | • |
| 12. RETURN AIR TEMPERATURE | | | | | | | | | | | | | | | • | | | | | | | | | | | | | | | | | | | | | | | | | | | • | • |
| 13. OUTDOOR AIR DAMPER WITH END SWITCH | • | | | | | | | | | | | • | | | | | | | | • | | | | | | | | | | | • | | | | | | | | | | | | | • |
| 14. OUTDOOR AIR DAMPER | | | | | • | | | | | | | | | | | | | | | | | | | | | | | | | | | • | • | | | | | | | | | | | • |
| 15. RETURN AIR DAMPER | | | | | • | | | | | | | | | | | | | | | | | | | | | | | | | | | • | • | | • | | | | | | | | | • |
| 16. OUTDOOR AIRFLOW | | | | | | | | | | | | | | | | | • | | | | | | | | | | | | | | | | | | | | | | | | | | • | • |
| 17. OUTDOOR AIR HUMIDITY | | | | | | | | | | | | | | | | • | | | | | | | | | | | | | | | | • | | | | | | | | | | | | • |
| 18. RETURN AIR HUMIDITY | | | | | | | | | | | | | | | | • | | | | | | | | | | | | | | | | • | | | | | | | | | | | | • |
| 19. DISCHARGE TEMPERATURE #1 (FREEZE-40 DEG F) | | | | | | | | | | | | | | | | | | | | | | • | | | | | | | | | | | | | | | | | | | | | • | • |
| 20. DISCHARGE TEMPERATURE #2 (FREEZE-50 DEG F) | | | | | | | | | | | | | | | | | | | | | | • | | | | | | | | | | | | | | | | | | | | | • | • |
| 21. RETURN STATIC PRESSURE | | | | | | | | | | | | | | | | • | | | | | | | | | | | | | | | | | | | | | | | | | | • | • | • |
| 22. OUTSIDE AIR INTAKE STATIC PRESSURE | | | | | | | | | | | | | | | | • | | | | | | | | | | | | | | | | | | | | | | | | | | • | | • |
| 23. DISCHARGE STATIC PRESSURE | | | | | | | | | | | | | | | | • | | | | | | | | | | | | | | | | | | | | | | | | | | • | • | • |
| 24. PRE-FILTER PRESSURE | | | | | | | | | | | | | | | | • | | | | | | | | | | | | | | | | | | | • | | | | | | | | | | • |
| 25. POST FILTER PRESSURE | | | | | | | | | | | | | | | | • | | | | | | | | | | | | | | | | | | | • | | | | | | | | | | • |
| 26. RETURN FAN STATUS | | | | | | | | | | | | | | | | | • | | | | | | | | • | | | | | | | | | | | | | | | | | | • | • |
| 27. RETURN FAN START/STOP | | • | | | | | | | | | | | | | | | | | | | | | | | | • | | | | | | | | | | | | | | | | | | • |
| 28. RETURN FAN SPEED | | | | | • | | | | | | | | | | | | | | | | | | | | | | | | | | | | | | | | | | | | | | • | • |
| 29. RETURN FAN ALARM | | | | | | | | | | | | • | | | | | | | | • | | | | | | | | | | | | | | | | | | | | | | | • | • |
| 30. ACCU STATUS | | | | | | | | | | | | | | | | | • | | | | | | | | • | | | | | | | | | | | | | | | | | | • | • |
| 31. ACCU ALARM | | | | | | | | | | | | • | | | | | | | | • | | | | | | | | | | | | | | | | | | | | | | | • | • |
| 32. ACCU ENABLE/DISABLE | • | | | | | | | | | | | | | | | | | | | | | | | | | | | | | | • | | | | | | | | | | | | | • |
| 33. ACCU SETPOINT | | | | | • | | | | | | | | | | | | | | | | | | | | | | | | | | | | • | | | | | | | | | | | • |
| 34. | | | | | | | | | | | | | | | | | | | | | | | | | | | | | | | | | | | | | | | | | | | | |

1 AIR HANDLING UNIT CONTROL POINTS LIST (AHU-1 & RAF-1)
SCALE: NTS

CONTROL POINTS LIST

SYSTEM: AIR HANDLING UNIT

| POINT DESCRIPTION (X) | HARDWARE OUTPUT DIGITAL: RELAY | SOLENOID | CONTACTOR | E.P. | HARDWARE OUTPUT ANALOG: PNEUMATIC TRANSDUCER | ELECTRIC TRANSDUCER | 4-20ma | HARDWARE INPUT DIGITAL: TEMPERATURE | PRESSURE | CURRENT STATUS | SWITCH STATUS | AUXILIARY CONTACT | HARDWARE INPUT ANALOG: TEMPERATURE | PRESSURE | RELATIVE HUMIDITY | FLOW | CO2 | SOFTWARE ALARMS DIGITAL: EQUIPMENT STATUS | MAINTENANCE | FAILURE | SOFTWARE ALARMS ANALOG: HIGH LIMIT | LOW LIMIT | RUN TIME | FAILURE | SOFTWARE BMS FUNCTION: SCHEDULES START/STOP | OPTIMUM START/STOP | UNIT ENABLE/DISABLE | DAYLIGHT SETBACK | LAYOUT SETBACK | VENTILATION | TEMPERATURE CONTROL | HEAT PUMP CONTROL | RETURN AIR RESET | ENTHALPY | FILTER PRESSURE | STATIC PRESSURE | SUPPLY FLOW | RETURN FLOW | MONITOR | COLOR GRAPHICS
|---|---|---|---|---|---|---|---|---|---|---|---|---|---|---|---|---|---|---|---|---|---|---|---|---|---|---|---|---|---|---|---|---|---|---|---|---|---|---|---|---|---|---|---|---|
| 1. SUPPLY FAN STATUS | | | | | | | | | | | | | | | | • | | | | | | | | | • | | | | | | | | | | | | | | | | | | | • | • |
| 2. CONDENSATE ALARM | | | | | | | | | | | | • | | | | | | | | • | | | | | | | | | | | | | | | | | | | | | | | • | • |
| 3. DISCHARGE TEMPERATURE | | | | | | | | | | | | | | | • | | | | | | | • | • | | | | | | | | | • | | | | | | | | | | | | • |
| 4. DISCHARGE STATIC PRESSURE | | | | | | | | | | | | | | | | • | | | | | | | | | | | | | | | | | | | | | | | | • | • | | | • |
| 5. HOT WATER CONTROL VALVE | | | | | | | | | • | | | | | | | | | | | | | | | | | | | | | | | • | | | | | | | | | | | | • |
| 6. FILTER PRESSURE | | | | | | | | | | | | | | | | • | | | | | | | | | | | | | | | | | | | | | | | | | | | | • |
| 7. SUPPLY FAN SPEED | | | | | | | | | • | | | | | | | | | | | | | | | | | | | | | | | | | | | | | • | • | | | | • |
| 8. SUPPLY FAN START/STOP | • | | | | | | | | | | | | | | | | | | | | | | | | | • | | | | | | | | | | | | | | | | | | • |
| 9. SUPPLY FAN ALARM | | | | | | | | | | | | • | | | | | | | | • | | | | | | | | | | | | | | | | | | | | | • | • | • |
| 10. MIXED AIR PLENUM PRESSURE | | | | | | | | | | | | | | | | • | | | | | | | | | | | | | | | | | | | | | | | | | | | | • |
| 11. MIXED AIR TEMPERATURE | | | | | | | | | | | | | | • | | | | | | | | | | | | | | | | | | | | | | | | | | | • | • | • |
| 12. RETURN AIR TEMPERATURE | | | | | | | | | | | | | | • | | | | | | | | | | | | | | | | | | | | | | | | | | | • | • | • |
| 13. OUTDOOR AIR DAMPER WITH END SWITCH | • | | | | | | | | | | | • | | | | | | | | • | | | | | | | | | | | | • | | | | | | | | | | | | • |
| 14. OUTDOOR AIR DAMPER | | | | | | | | | • | | | | | | | | | | | | | | | | | | | | | | | | | | | | | | | | | | | • |
| 15. RETURN AIR DAMPER | | | | | | | | | • | | | | | | | | | | | | | | | | | | | | | | | | | | | | | | | | | | | • |
| 16. OUTDOOR AIRFLOW | | | | | | | | | | | | | | | | | • | | | | | | | | | | | | | | | | | | | | | | | | | • | • | • |
| 17. DISCHARGE TEMPERATURE #1 (FREEZE-40 DEG F) | | | | | | | | | | | | | | | | | | | | | | • | | | | | | | | | | | | | | | | | | | | | • | • |
| 18. DISCHARGE TEMPERATURE #2 (FREEZE-50 DEG F) | | | | | | | | | | | | | | | | | | | | | | • | | | | | | | | | | | | | | | | | | | | | • | • |
| 19. ACCU STATUS | | | | | | | | | | | | | | | | • | | | | | | | | | | • | | | | | | | | | | | | | | | | | | • |
| 20. ACCU ALARM | | | | | | | | | | | | • | | | | | | | | • | | | | | | | | | | | | | | | | | | | | | | | • | • |
| 21. ACCU ENABLE/DISABLE COOLING STAGE #1 | • | | | | | | | | | | | | | | | | | | | | | | | | | | | | | | • | | | • | | | | | | | | | | • |
| 22. TRAINING ROOM OCCUPANCY SENSOR | | | | | | | | | | | | • | | | | | | | | | | | | | | | | | | | • | | • | | | | | | | | | | | • |
| 23. | | | | | | | | | | | | | | | | | | | | | | | | | | | | | | | | | | | | | | | | | | | | |

2 AIR HANDLING UNIT CONTROL POINTS LIST (AHU-2)
SCALE: NTS

CONTROL POINTS LIST

SYSTEM: FAN COIL UNIT

| POINT DESCRIPTION (X) | HARDWARE OUTPUT DIGITAL: RELAY | SOLENOID | CONTACTOR | E.P. | HARDWARE OUTPUT ANALOG: PNEUMATIC TRANSDUCER | ELECTRIC TRANSDUCER | 4-20ma | HARDWARE INPUT DIGITAL: TEMPERATURE | PRESSURE | CURRENT STATUS | SWITCH STATUS | AUXILIARY CONTACT | HARDWARE INPUT ANALOG: TEMPERATURE | PRESSURE | RELATIVE HUMIDITY | FLOW | CO2 | SOFTWARE ALARMS DIGITAL: EQUIPMENT STATUS | MAINTENANCE | FAILURE | SOFTWARE ALARMS ANALOG: HIGH LIMIT | LOW LIMIT | RUN TIME | FAILURE | SOFTWARE BMS FUNCTION: SCHEDULES START/STOP | OPTIMUM START/STOP | UNIT ENABLE/DISABLE | DAYLIGHT SETBACK | LAYOUT SETBACK | VENTILATION | TEMPERATURE CONTROL | HEAT PUMP CONTROL | RETURN AIR RESET | ENTHALPY | FILTER PRESSURE | STATIC PRESSURE | SUPPLY FLOW | RETURN FLOW | MONITOR | COLOR GRAPHICS
|---|---|---|---|---|---|---|---|---|---|---|---|---|---|---|---|---|---|---|---|---|---|---|---|---|---|---|---|---|---|---|---|---|---|---|---|---|---|---|---|---|---|---|---|---|
| 1. SUPPLY FAN STATUS | | | | | | | | | | | | | | | | | • | | | | | | | | • | | | | | | | | | | | | | | | | | | | • | • |
| 2. CONDENSATE ALARM | | | | | | | | | | | | | | | | | | | | • | | | | | | | | | | | | | | | | | | | | | | | • | • |
| 3. DISCHARGE TEMPERATURE | | | | | | | | | | | | | | | | | | | | | | • | | | | | | | | | | | | | | | | | | | | | | • |
| 4. HOT WATER CONTROL VALVE | | | | | | | | | | | | | | | | • | | | | | | | | | | | | | | | | | | | | | | | | | | | | • |
| 5. FILTER PRESSURE | | | | | | | | | | | | | | | | | | | | | | | | | | | | | | | | | | | | | | | | | | | | • |
| 6. SUPPLY FAN SPEED | | | | | | | | | | | | | | | | • | | | | | | | | | | | | | | | | | | | | | | | | | | | | • |
| 7. MIXED AIR TEMPERATURE | | | | | | | | | | | | | | | | | | | | | | • | | | | | | | | | | | | | | | | | | | | | | • |
| 8. RETURN AIR TEMPERATURE | | | | | | | | | | | | | | | | | | | | | | • | | | | | | | | | | | | | | | | | | | | | | • |
| 9. OUTDOOR AIR DAMPER WITH END SWITCH | • | | | | | | | | | | | | | | | | | | | | | • | | | | | | | | | | | | | | | | | | | | | | • |
| 10. OUTDOOR AIRFLOW | | | | | | | | | | | | | | | | | | | | | | | • | | | | | | | | | | | | | | | | | | | | | • |
| 11. DISCHARGE TEMPERATURE #1 (FREEZE-40 DEG F) | | | | | | | | | | | | | | | | | | | | | | | | | | | | | | | | | | | | | | | | | | | | • |
| 12. DISCHARGE TEMPERATURE #2 (FREEZE-50 DEG F) | | | | | | | | | | | | | | | | | | | | | | | | | | | | | | | | | | | | | | | | | | | | • |
| 13. ACCU STATUS | | | | | | | | | | | | | | | | | | | | | | | • | | | | | | | | | | | | | | | | | | | | | • |
| 14. ACCU ALARM | | | | | | | | | | | | | | | | | | | | • | | | | | | | | | | | | | | | | | | | | | | | | • |
| 15. ACCU ENABLE/DISABLE COOLING STAGE #1 | • | | | | | | | | | | | | | | | | | | | | | | | | | | | | | | | | | • | | • | | | | | | | | • |
| 16. SPACE SENSOR | | | | | | | | | | | | | | | | | | | | | | • | | | | | | | | | | | | • | | • | | | | | | | | • |
| 17. READY ROOM OCCUPANCY SENSOR | | | | | | | | | | | | | | | | | | | | • | | | | | | | | | | | | | | • | | • | | | | | | | | • |

3 FAN COIL UNIT CONTROL POINTS LIST (FCU-1)
SCALE: NTS

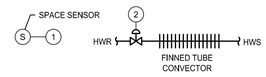

CONTROL POINTS LIST

SYSTEM: REHEAT COIL

| POINT DESCRIPTION (X) | HARDWARE OUTPUT DIGITAL: RELAY | SOLENOID | CONTACTOR | E.P. | HARDWARE OUTPUT ANALOG: PNEUMATIC TRANSDUCER | ELECTRIC TRANSDUCER | 4-20ma | HARDWARE INPUT DIGITAL: TEMPERATURE | PRESSURE | CURRENT STATUS | SWITCH STATUS | AUXILIARY CONTACT | HARDWARE INPUT ANALOG: TEMPERATURE | PRESSURE | RELATIVE HUMIDITY | FLOW | CO2 | SOFTWARE ALARMS DIGITAL: EQUIPMENT STATUS | MAINTENANCE | FAILURE | SOFTWARE ALARMS ANALOG: HIGH LIMIT | LOW LIMIT | RUN TIME | FAILURE | SOFTWARE BMS FUNCTION: SCHEDULES START/STOP | OPTIMUM START/STOP | UNIT ENABLE/DISABLE | DAYLIGHT SETBACK | LAYOUT SETBACK | VENTILATION | TEMPERATURE CONTROL | HEAT PUMP CONTROL | RETURN AIR RESET | ENTHALPY | FILTER PRESSURE | STATIC PRESSURE | SUPPLY FLOW | RETURN FLOW | MONITOR | COLOR GRAPHICS
|---|---|---|---|---|---|---|---|---|---|---|---|---|---|---|---|---|---|---|---|---|---|---|---|---|---|---|---|---|---|---|---|---|---|---|---|---|---|---|---|---|---|---|---|---|
| 1. SPACE TEMPERATURE | | | | | | | | | | | | | | | | • | | | | | | | | | • | | | | | | | | | | | | | | | | | | | | • |
| 2. HOT WATER CONTROL VALVE | | | | | | | | | | | | | | | • | | | | | | | | | | | | | | | | | | | | | | | | | | | | | | • |
| 3. | | | | | | | | | | | | | | | | | | | | | | | | | | | | | | | | | | | | | | | | | | | | |

6 FINNED TUBE CONVECTOR CONTROL POINTS LIST (FTC)
SCALE: NTS

CONTROL POINTS LIST

SYSTEM: UNIT HEATER AND CABINET UNIT HEATER

| POINT DESCRIPTION (X) | HARDWARE OUTPUT DIGITAL: RELAY | SOLENOID | CONTACTOR | E.P. | HARDWARE OUTPUT ANALOG: PNEUMATIC TRANSDUCER | ELECTRIC TRANSDUCER | 4-20ma | HARDWARE INPUT DIGITAL: TEMPERATURE | PRESSURE | CURRENT STATUS | SWITCH STATUS | AUXILIARY CONTACT | HARDWARE INPUT ANALOG: TEMPERATURE | PRESSURE | RELATIVE HUMIDITY | FLOW | CO2 | SOFTWARE ALARMS DIGITAL: EQUIPMENT STATUS | MAINTENANCE | FAILURE | SOFTWARE ALARMS ANALOG: HIGH LIMIT | LOW LIMIT | RUN TIME | FAILURE | SOFTWARE BMS FUNCTION: SCHEDULES START/STOP | OPTIMUM START/STOP | UNIT ENABLE/DISABLE | DAYLIGHT SETBACK | LAYOUT SETBACK | VENTILATION | TEMPERATURE CONTROL | HEAT PUMP CONTROL | RETURN AIR RESET | ENTHALPY | FILTER PRESSURE | STATIC PRESSURE | SUPPLY FLOW | RETURN FLOW | MONITOR | COLOR GRAPHICS
|---|---|---|---|---|---|---|---|---|---|---|---|---|---|---|---|---|---|---|---|---|---|---|---|---|---|---|---|---|---|---|---|---|---|---|---|---|---|---|---|---|---|---|---|---|
| 1. FAN STOP/START | | • | | | | | | | | | | | | | | | | | | | | | | | • | | | | | | | | | | | | | | | | | | | | • |
| 2. FAN STATUS | | | | | | | | | | | | | | | | • | | | | | | | | | | | | | | | | | | | | | | | | | | | | • |
| 3. SPACE SENSOR | | | | | | | | | | | | | | | • | | | | | | | • | | | • | | | | | | | | | | | | | | | | | | | • |
| 4. HOT WATER CONTROL VALVE | | | | | | | • | | | | | | | | | | | | | | | | | | • | | | | | | | | | | | | | | | | | | | • |

4 UNIT HEATER AND CABINET UNIT HEATER CONTROL POINTS LIST (UH & CUH)
SCALE: NTS

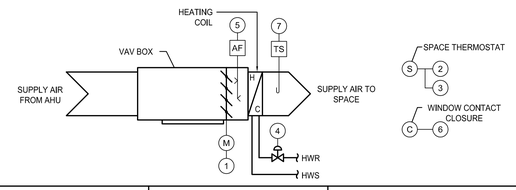

CONTROL POINTS LIST

SYSTEM: VARIABLE AIR VOLUME (VAV)

| POINT DESCRIPTION (X) | HARDWARE OUTPUT DIGITAL: RELAY | SOLENOID | CONTACTOR | E.P. | HARDWARE OUTPUT ANALOG: PNEUMATIC TRANSDUCER | ELECTRIC TRANSDUCER | 4-20ma | HARDWARE INPUT DIGITAL: TEMPERATURE | PRESSURE | CURRENT STATUS | SWITCH STATUS | AUXILIARY CONTACT | HARDWARE INPUT ANALOG: TEMPERATURE | PRESSURE | RELATIVE HUMIDITY | FLOW | CO2 | SOFTWARE ALARMS DIGITAL: EQUIPMENT STATUS | MAINTENANCE | FAILURE | SOFTWARE ALARMS ANALOG: HIGH LIMIT | LOW LIMIT | RUN TIME | FAILURE | SOFTWARE BMS FUNCTION: SCHEDULES START/STOP | OPTIMUM START/STOP | UNIT ENABLE/DISABLE | DAYLIGHT SETBACK | LAYOUT SETBACK | VENTILATION | TEMPERATURE CONTROL | HEAT PUMP CONTROL | RETURN AIR RESET | ENTHALPY | FILTER PRESSURE | STATIC PRESSURE | SUPPLY FLOW | RETURN FLOW | MONITOR | COLOR GRAPHICS
|---|---|---|---|---|---|---|---|---|---|---|---|---|---|---|---|---|---|---|---|---|---|---|---|---|---|---|---|---|---|---|---|---|---|---|---|---|---|---|---|---|---|---|---|---|
| 1. VAV DAMPER | | | | | | | • | | | | | | | | | | | | | | | | | | | | | | | | | | | • | | | | | | | • | | | • |
| 2. SPACE TEMPERATURE | | | | | | | | | | | | | | | • | | | | | | | | | | | | • | | • | | | | | • | | | | | | | • | | | • |
| 3. SPACE TEMPERATURE OCCUPIED OVERRIDE SETPOINT | | | | | | | | | | | | | | • | | | | | | | | | | | | | | | | | | | | • | | | | | | | | | | • |
| 4. HOT WATER CONTROL VALVE | | | | | | | | | | | | | | | | | | | | | | | | | | | | | | | | | | • | | | | | | | | | | • |
| 5. AIRFLOW SENSOR | | | | | | | | | | | | | | | | • | | | | | | | | | | | | | | | | | | | | | | | | | | | • | • |
| 6. WINDOW CONTACT CLOSURE | | | | | | | | | | | | | | | • | | | | | | | | | | | | | • | | | | | | | | | | | | | | | | • |
| 7. LEAVING AIR TEMPERATURE | | | | | | | | | | | | | | | | | • | | | | | | | | | | | | | | | | | | | | | | | | | | • | • |

5 VARIABLE AIR VOLUME BOX WITH REHEAT CONTROL POINTS LIST (VAV)
SCALE: NTS

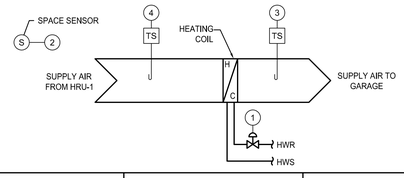

CONTROL POINTS LIST

SYSTEM: REHEAT COIL

| POINT DESCRIPTION (X) | HARDWARE OUTPUT DIGITAL: RELAY | SOLENOID | CONTACTOR | E.P. | HARDWARE OUTPUT ANALOG: PNEUMATIC TRANSDUCER | ELECTRIC TRANSDUCER | 4-20ma | HARDWARE INPUT DIGITAL: TEMPERATURE | PRESSURE | CURRENT STATUS | SWITCH STATUS | AUXILIARY CONTACT | HARDWARE INPUT ANALOG: TEMPERATURE | PRESSURE | RELATIVE HUMIDITY | FLOW | CO2 | SOFTWARE ALARMS DIGITAL: EQUIPMENT STATUS | MAINTENANCE | FAILURE | SOFTWARE ALARMS ANALOG: HIGH LIMIT | LOW LIMIT | RUN TIME | FAILURE | SOFTWARE BMS FUNCTION: SCHEDULES START/STOP | OPTIMUM START/STOP | UNIT ENABLE/DISABLE | DAYLIGHT SETBACK | LAYOUT SETBACK | VENTILATION | TEMPERATURE CONTROL | HEAT PUMP CONTROL | RETURN AIR RESET | ENTHALPY | FILTER PRESSURE | STATIC PRESSURE | SUPPLY FLOW | RETURN FLOW | MONITOR | COLOR GRAPHICS
|---|---|---|---|---|---|---|---|---|---|---|---|---|---|---|---|---|---|---|---|---|---|---|---|---|---|---|---|---|---|---|---|---|---|---|---|---|---|---|---|---|---|---|---|---|
| 1. SPACE TEMPERATURE | | | | | | | | | | | | | | | | • | | | | | | | | | • | | • | | • | | | | | | | | | | | | | | | • |
| 2. HOT WATER CONTROL VALVE | | | | | | | | | | | | | | | • | | | | | | | | | | | | | | | | | | | | • | | | | | | | | | • |
| 3. LEAVING AIR TEMPERATURE | | | | | | | | | | | | | | | | | | | | | | | | | | | | | | | | | | | • | | | | | | | | | • |
| 4. ENTERING AIR TEMPERATURE | | | | | | | | | | | | | | | | | | | | | | | | | | | | | | | | | | | • | | | | | | | | | • |

7 REHEAT COIL CONTROL POINTS LIST (RHC-1)
SCALE: NTS

GREATER LYNCHBURG TRANSIT COMPANY
1301 Kemper Street PO Box 797
Lynchburg, VA 24505-0797

PROJECT ADDRESS:
419 Bradley Dr.
Lynchburg, VA
24501-4901

Operations & Maintenance Facility

BID DOCUMENTS

wendel
1420 King Street, Suite 510
Alexandria, VA 22314
www.wendelcompanies.com
p:703.299.8718 f:703.299.8719
ALEXANDRIA ARCHITECTURE, ENGINEERING, LAND SURVEYING & LANDSCAPE ARCHITECTS, INC

Wiley|Wilson
Consultant Programs
127 Nationwide Drive, Lynchburg, Virginia 24502-4272
phone 434.947.7777 | fax 434.947.8411 | web wileywilson.com

Civil · Stormwater · Traffic · Transportation
VSBE/DBE
EPR
"Engineering & Planning Resources"
637 Berkshire Circle, Charlottesville, VA 22901
434.202.5082 www.epr-corp.com

NOTE:

THIS DOCUMENT, AND THE IDEAS AND DESIGNS INCORPORATED HEREIN, AS AN INSTRUMENT OF PROFESSIONAL SERVICE, IS THE PROPERTY OF THE ARCHITECT AND ENGINEER AND IS NOT TO BE USED IN WHOLE OR IN PART, FOR ANY OTHER PROJECT WITHOUT WRITTEN AUTHORIZATION BY THE ARCHITECT AND ENGINEER. UNAUTHORIZED ALTERATION OR ADDITION TO ANY SURVEY DRAWING, DESIGN, SPECIFICATION, PLAN OR REPORT IS PROHIBITED IN ACCORDANCE WITH STATE LAW, CODE 5193 PASS.

COMMONWEALTH OF VIRGINIA
RAYMOND F. JOHNSON, II
Lic. No. 0402235
PROFESSIONAL ENGINEER

Revision Number	Issued by	Revision Description	Revision Date

DWG. TITLE

HVAC CONTROL DIAGRAMS

DATE	09/24/2014
SCALE	AS NOTED
DWN.	GMM
CHK.	CRL
PROJ. No.	444505
DWG. No.	H402

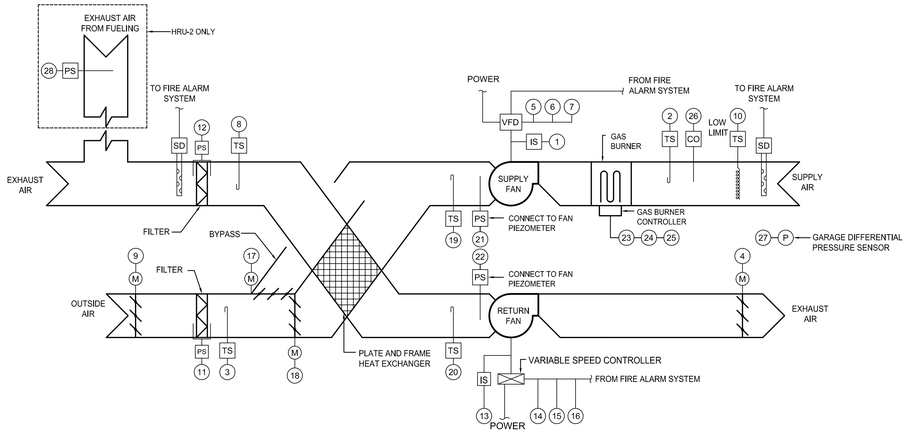

CONTROL POINTS LIST	HARDWARE												SOFTWARE															
	OUTPUT								INPUT				ALARMS						BMS FUNCTION									
	DIGITAL				ANALOG				DIGITAL				ANALOG				DIGITAL		ANALOG									
SYSTEM: HEAT RECOVERY UNIT / POINT DESCRIPTION (X)	RELAY SOLENOID	CONTACTOR	CONTACT	PNEUMATIC TRANSDUCER	PNEUMATIC TRANSDUCER 4-20mA				TEMPERATURE SENSOR	PRESSURE SENSOR	CURRENT SENSOR	AUXILIARY CONTACT	TEMPERATURE SENSOR	RELATIVE HUMIDITY SENSOR	CURRENT SENSOR	POSITION SENSOR	SWITCH STATUS	EQUIPMENT STATUS	MAINTENANCE ALARM	HIGH LIMIT	LOW LIMIT	HIGH LIMIT	LOW LIMIT	FAILURE	ABS LOW VERIFICATION	SCHEDULED START/STOP	SCHEDULED START/STOP	SOFT START/STOP	UNOCCUPIED OVERRIDE	DAYNIGHT SETBACK	DAYNIGHT SETBACK	TIME DELAY TIMER	CONTROL	BINARY CONTROL	DX COOLING CONTROL	LIN RESET PRESSURE	STATIC PRESSURE CONTROL	CHILLED WATER RESET	BOILER	RETURN FLOW	COOLING	COOLING SPACES
1. SUPPLY FAN STATUS																•									•												•	•
2. DISCHARGE TEMPERATURE															•						•	•										•					•	•
3. OUTDOOR AIR TEMPERATURE															•																•							•
4. EXHAUST AIR DAMPER WITH END SWITCH	•										•							•										•										•
5. SUPPLY FAN SPEED						•																														•		•
6. SUPPLY FAN START/STOP		•																								•												•
7. SUPPLY FAN ALARM											•							•																			•	•
8. RETURN AIR TEMPERATURE															•																						•	•
9. OUTDOOR AIR DAMPER WITH END SWITCH	•										•							•										•										•
10. DISCHARGE TEMPERATURE #1 (FREEZE-40 DEG F)																					•																•	•
11. FILTER PRESSURE														•																				•				•
12. FILTER PRESSURE														•																				•				•
13. RETURN FAN STATUS																•									•												•	•
14. RETURN FAN START/STOP		•																								•												•
15. RETURN FAN SPEED						•																														•	•	•
16. RETURN FAN ALARM											•							•																			•	•
17. OUTSIDE AIR BYPASS DAMPER						•																									•							•
18. OUTSIDE AIR FACE DAMPER						•																									•							•
19. HX DISCHARGE TEMPERATURE- SUPPLY SIDE															•																						•	•
20. HX DISCHARGE TEMPERATURE- RETURN SIDE															•																						•	•
21. SUPPLY FAN DIFFERENTIAL PRESSURE TRANSDUCER																•																					•	•
22. RETURN FAN DIFFERENTIAL PRESSURE TRANSDUCER																•																					•	•
23. GAS BURNER ALARM																	•																				•	•
24. GAS BURNER DISCHARGE AIR TEMPERATURE SETPOINT						•																									•							•
25. GAS BURNER DISCHARGE AIR TEMPERATURE						•																									•							•
26. SUPPLY AIR CO MONITOR																	•											•									•
27. GARAGE PRESSURE														•																				•				•
28. FUELING AREA RETURN DUCT PRESSURE SENSOR														•											•						•							•
29.																																						
30.																																						

1 HEAT RECOVERY CONTROL POINTS LIST (HRU-1 & HRU-2)
SCALE: NTS

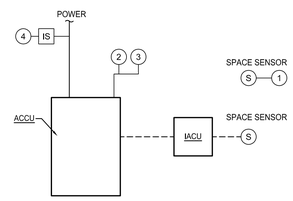

PROVIDE ALL REQUIRED CONTROL WIRING BETWEEN THE INDOOR UNIT, OUTDOOR UNIT, AND CONTROL UNIT

CONTROL POINTS LIST	HARDWARE												SOFTWARE															
	OUTPUT								INPUT				ALARMS						BMS FUNCTION									
	DIGITAL				ANALOG				DIGITAL				ANALOG				DIGITAL		ANALOG									
SYSTEM: SPLIT SYSTEM / POINT DESCRIPTION (X)	RELAY SOLENOID	CONTACTOR	CONTACT	PNEUMATIC TRANSDUCER	PNEUMATIC TRANSDUCER 4-20mA				TEMPERATURE SENSOR	PRESSURE SENSOR	CURRENT SENSOR	AUXILIARY CONTACT	TEMPERATURE SENSOR	RELATIVE HUMIDITY SENSOR	CURRENT SENSOR	POSITION SENSOR	SWITCH STATUS	EQUIPMENT STATUS	MAINTENANCE ALARM	HIGH LIMIT	LOW LIMIT	HIGH LIMIT	LOW LIMIT	FAILURE	ABS LOW VERIFICATION	SCHEDULED START/STOP	SCHEDULED START/STOP	SOFT START/STOP	FAN COOLING	DAYNIGHT SETBACK	DAYNIGHT SETBACK	TIME DELAY TIMER	GLYCOL TEMPERATURE RESET	DISCHARGE AIR RESET	HOT WATER RESET	CHILLED WATER RESET	CONDENSER WATER RESET	BOILER	COOLING	COOLING SPACES
1. SPACE TEMPERATURE SENSOR (TYP ALL)															•						•	•															•	•
2. SYSTEM ALARM (TYP ALL)																		•		•																	•	•
3. SYSTEM ENABLE/DISABLE			•																							•											•	
4. SYSTEM STATUS											•														•												•	•
5.																																						
6.																																						
7.																																						

2 SPLIT SYSTEM CONTROL POINTS LIST
SCALE: NTS

GREATER LYNCHBURG TRANSIT COMPANY
1301 Kemper Street PO Box 797
Lynchburg, VA 24505-0797

PROJECT ADDRESS:
419 Bradley Dr.
Lynchburg, VA
24501-4901

Operations & Maintenance Facility

BID DOCUMENTS

wendel
1420 King Street, Suite 510
Alexandria, VA 22314
www.wendelcompanies.com
p:703.299.8718 f:703.299.8719
ALEXANDRIA ARCHITECTURE, ENGINEERING, LAND SURVEYING & LANDSCAPE ARCHITECTS, INC

Wiley|Wilson
Consultant Progress
127 Nationwide Drive, Lynchburg, Virginia 24502-4272
phone 434.947.7777 | fax 434.947.1021 | web wileywilson.com

Civil · Stormwater · Traffic · Transportation
VSBE/DBE
EPR
"Engineering & Planning Resources"
637 Berkshire Circle, Charlottesville, VA 22901
434.202.5082, www.epr-corp.com

NOTE:
THIS DOCUMENT, AND THE IDEAS AND DESIGNS INCORPORATED HEREIN, AS AN INSTRUMENT OF PROFESSIONAL SERVICE, IS THE PROPERTY OF THE ARCHITECT AND THE ARCHITECT RESERVES ALL RIGHTS THEREIN. NO PART OF THIS DOCUMENT MAY BE REPRODUCED WITHOUT THE WRITTEN AUTHORIZATION OF THE ARCHITECT AND ENGINEER. UNAUTHORIZED ALTERATION OR ADDITION TO ANY SURVEY DRAWING, DESIGN, SPECIFICATION, PLAN OR REPORT IS PROHIBITED IN ACCORDANCE WITH STATE LAW, CODE AND RULES.

COMMONWEALTH OF VIRGINIA
RAYMOND F. JOHNSON, II
Lic. No. 0402035
PROFESSIONAL ENGINEER

Revision Number	Issued by:	Revision Description	Revision Date

DWG. TITLE

HVAC CONTROL DIAGRAMS

DATE	09/24/2014
SCALE	AS NOTED
DWN.	GMM
CHK.	CRL
PROJ. No.	444505
DWG. No.	H403

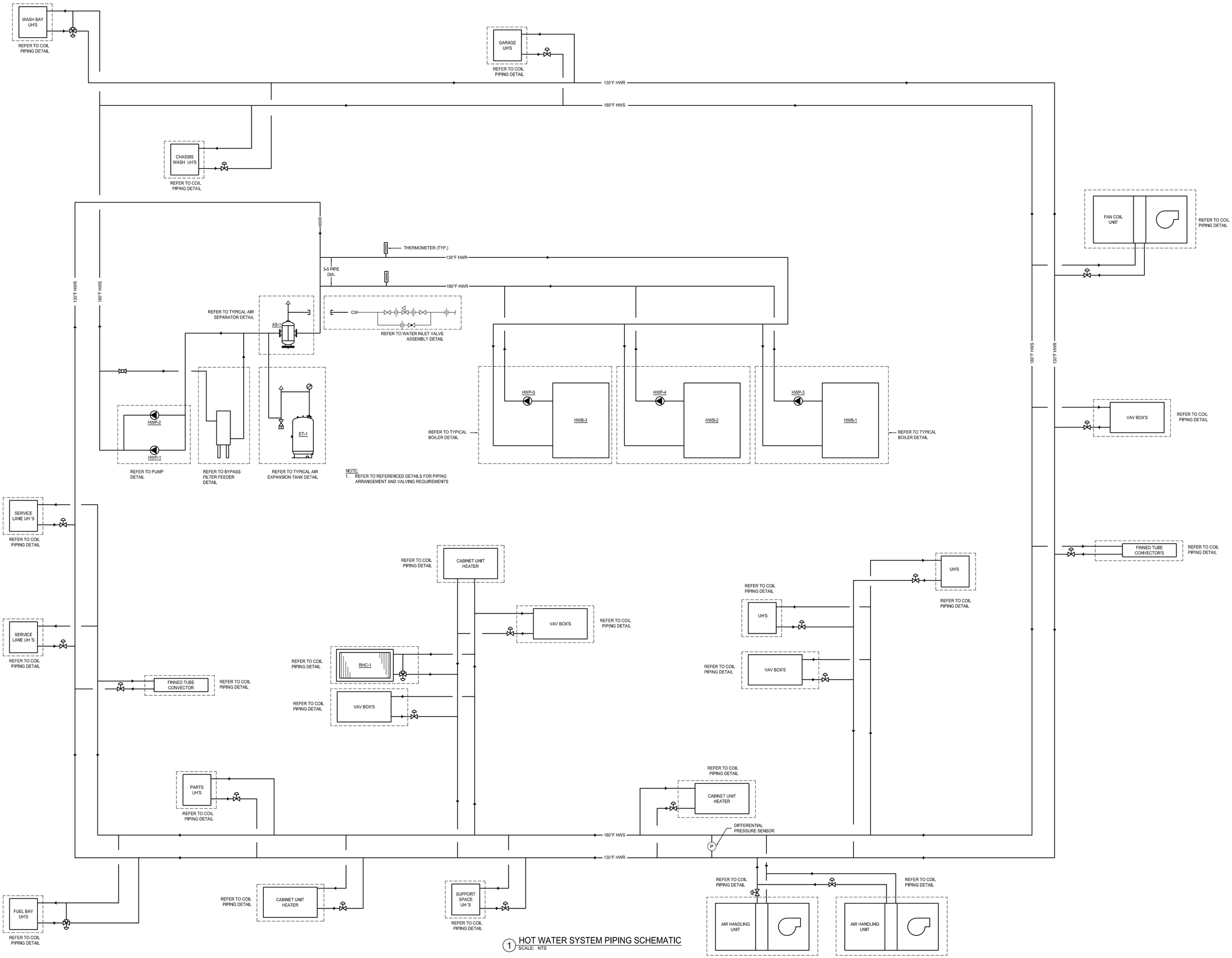

1 HOT WATER SYSTEM PIPING SCHEMATIC
SCALE: NTS

GREATER LYNCHBURG TRANSIT COMPANY
1301 Kemper Street PO Box 797
Lynchburg, VA 24505-0797

PROJECT ADDRESS:
419 Bradley Dr.
Lynchburg, VA
24501-4901

Operations & Maintenance Facility

BID DOCUMENTS

wendel
1420 King Street, Suite 510
Alexandria, VA 22314
www.wendelcompanies.com
p:703.299.8718 f:703.299.8719
ALEXANDRIA ARCHITECTURE, ENGINEERING, LAND SURVEYING & LANDSCAPE ARCHITECTS, INC

Wiley|Wilson
Constant Progress
127 Nationwide Drive, Lynchburg, Virginia 24502-4272
phone 434.947.7777 | fax 434.947.1021 | web wileywilson.com

Civil · Stormwater · Traffic · Transportation
EPR
"Engineering & Planning Resources"
637 Berkshire Circle, Charlottesville, VA 22901
434.202.5082 www.epr-corp.com

NOTE:
THIS DOCUMENT, AND THE IDEAS AND DESIGNS INCORPORATED HEREIN, AS AN INSTRUMENT OF PROFESSIONAL SERVICE, IS THE PROPERTY OF THE ARCHITECT AND ENGINEER AND IS TO BE RETURNED UPON REQUEST. IT IS NOT TO BE USED ON ANY PROJECT WITHOUT THE WRITTEN AUTHORIZATION OF THE ARCHITECT AND ENGINEER. UNAUTHORIZED ALTERATION OR ADDITION TO ANY SURVEY DRAWING, DESIGN, SPECIFICATION, PLAN OR REPORT IS PROHIBITED IN ACCORDANCE WITH STATE LAW, CODE AND RULES.

COMMONWEALTH OF VIRGINIA
ANTHONY E. JOHNSON, II
Lic. No. 042215
PROFESSIONAL ENGINEER

Revision Number	Issued by	Revision Description	Revision Date

DWG. TITLE

HVAC SCHEMATIC

DATE	09/24/2014
SCALE	AS NOTED
DWN.	GMM
CHK.	CRL
PROJ. No.	444505
DWG. No.	H501