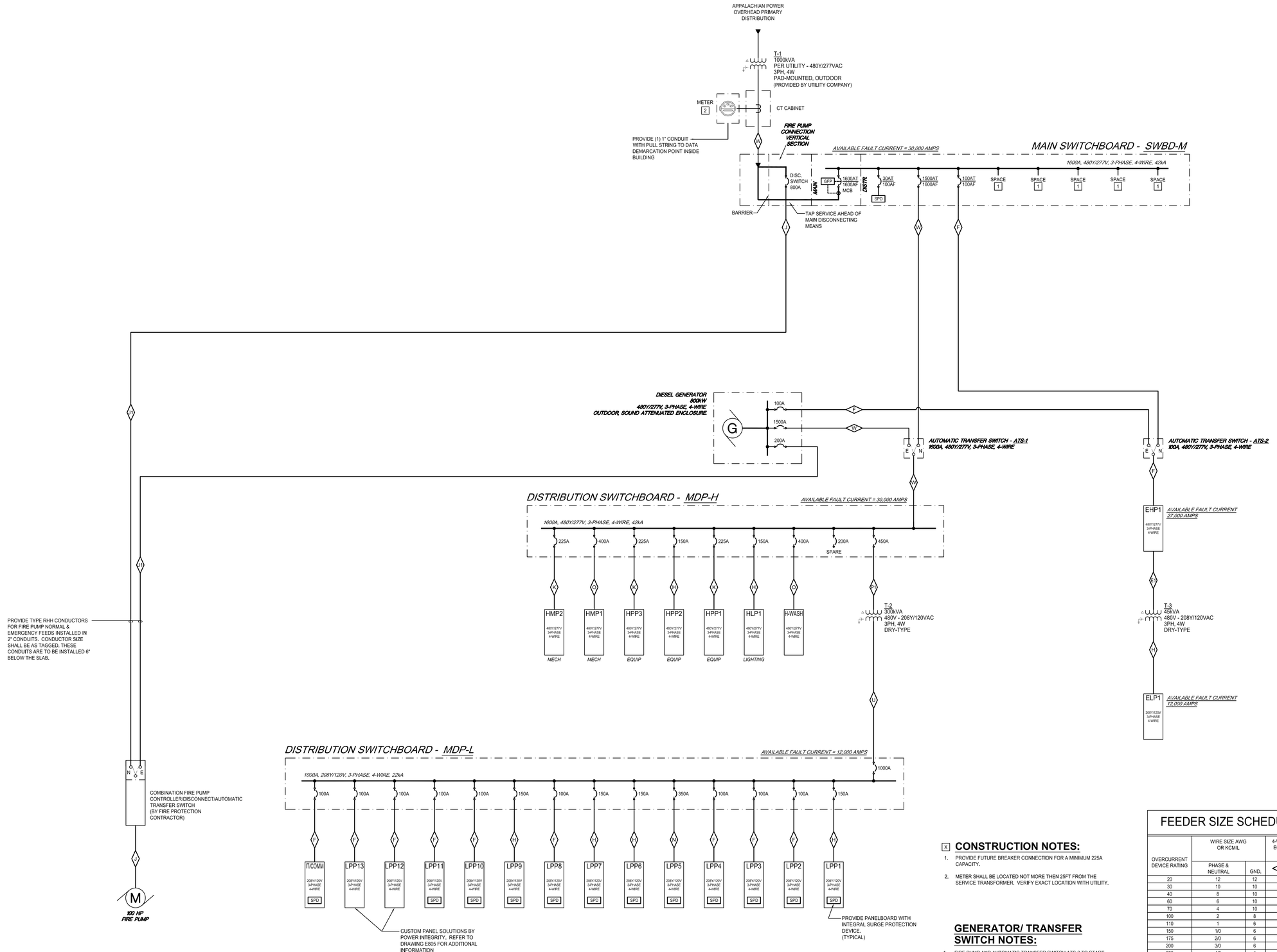

1 SINGLE LINE DIAGRAM
SCALE: NONE

X CONSTRUCTION NOTES:

1. PROVIDE FUTURE BREAKER CONNECTION FOR A MINIMUM 225A CAPACITY.
2. METER SHALL BE LOCATED NOT MORE THEN 25FT FROM THE SERVICE TRANSFORMER. VERIFY EXACT LOCATION WITH UTILITY.

GENERATOR/ TRANSFER SWITCH NOTES:

1. FIRE PUMP AND AUTOMATIC TRANSFER SWITCH ATS-2 TO START WITH NO DELAY.
2. AUTOMATIC TRANSFER ATS-1 TO HAVE 10 SECOND STARTING DELAY.
3. AIR HANDLING UNIT NO.1 TO HAVE 15 SECOND STARTING DELAY. (PROVIDED WITH UNIT BY MECHANICAL/ HVAC CONTRACTOR).

FEEDER SIZE SCHEDULE

OVERCURRENT DEVICE RATING	WIRE SIZE AWG OR KCMIL		4-WIRE FEEDERS WITH EQUIPMENT GROUND		3-WIRE FEEDERS WITH EQUIPMENT GROUND	
	PHASE & NEUTRAL	GND.	Ø	CONDUIT SIZE	Ø	CONDUIT SIZE
20	12	12	A	3/4"	A1	3/4"
30	10	10	B	3/4"	B1	3/4"
40	8	10	C	3/4"	C1	3/4"
60	6	10	D	1"	D1	1"
70	4	10	E	1 1/4"	E1	1 1/4"
100	2	8	F	1 1/4"	F1	1 1/4"
110	1	6	G	1 1/2"	G1	1 1/2"
150	1/0	6	H	2"	H1	2"
175	2/0	6	I	2"	I1	2"
200	3/0	6	J	2"	J1	2"
225	4/0	4	K	2 1/2"	K1	2 1/2"
250	250	4	L	2 1/2"	L1	2 1/2"
300	350	4	M	3"	M1	3"
350	500	2	N	3"	N1	3"
400	600	2	O	3 1/2"	O1	3"
450	2-4/0	2	P	2-2 1/2"	P1	2-2"
500	2-250	2	Q	2-2 1/2"	Q1	2-2 1/2"
600	2-350	1	R	2-3"	R1	2-3"
700	2-500	1/0	S	2-3"	S1	2-3"
800	2-600	1/0	T	2-3 1/2"	T1	2-3"
1000	3-500	2/0	U	3-3 1/2"	U1	3-3"
1200	3-600	3/0	V	3-3 1/2"	V1	3-3 1/2"
1600	4-600	4/0	W	4-3 1/2"	W1	4-3 1/2"
2000	5-600	250	X	5-3 1/2"	X1	5-3 1/2"
2500	6-600	350	Y	6-3 1/2"	Y1	6-3 1/2"
3000	8-500	500	Z	8-3 1/2"	Z1	8-3 1/2"
4000	10-500	500	AA	10-3 1/2"	AA1	10-3 1/2"
5000	12-600	2-500	BB	12-3 1/2"	BB1	12-3 1/2"
6000	16-500	2-500	CC	16-3 1/2"	CC1	16-3"

GREATER LYNCHBURG TRANSIT COMPANY
1301 Kemper Street PO Box 797
Lynchburg, VA 24505-0797

PROJECT ADDRESS:
419 Bradley Dr.
Lynchburg, VA
24501-4901

Operations & Maintenance Facility

BID DOCUMENTS

wendel
1420 King Street, Suite 510
Alexandria, VA 22314
www.wendelcompanies.com
p:703.299.8718 f:703.299.8719
ALEXANDRIA ARCHITECTURE, ENGINEERING, LAND SURVEYING & LANDSCAPE ARCHITECTS, INC

Wiley|Wilson
Consultant Programs
121 Nationwide Drive, Lynchburg, Virginia 24502-4272
phone 434.947.7777 | fax 434.947.1011 | web wileywilson.com

Civil · Stormwater · Traffic · Transportation
VSBE/DBE
E&PR
"Engineering & Planning Resources"
637 Berkshire Circle, Charlottesville, VA 22901
434.202.5082 www.epr-corp.com

NOTE:
THIS DOCUMENT, AND THE IDEAS AND DESIGNS INCORPORATED HEREIN, AS AN INSTRUMENT OF PROFESSIONAL SERVICE, IS THE PROPERTY OF THE ARCHITECT AND ENGINEER AND IS NOT TO BE USED IN WHOLE OR IN PART, FOR ANY OTHER PROJECT WITHOUT WRITTEN AUTHORIZATION BY THE ARCHITECT AND ENGINEER. UNAUTHORIZED ALTERATION OR ALTERATION TO ANY SURVEY DRAWING, DESIGN, SPECIFICATION, PLAN OR REPORT IS PROHIBITED IN ACCORDANCE WITH STATE LAW, CODE AND RULES.

COMMONWEALTH OF VIRGINIA
PETER T. VOMSCHEIDT, SR.
Lic. No. 042134
PROFESSIONAL ENGINEER

Revision Number	Issued by	Revision Description	Revision Date

DWG. TITLE
SINGLE LINE DIAGRAM

DATE 09/24/2014
SCALE AS NOTED
DWN. RB CHK. PTV
PROJ. NO. 444505
DWG. NO.
E600

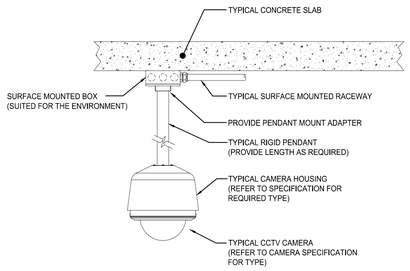

PENDANT MOUNTED
TYPICAL CCTV CAMERA
2 SCALE: NONE

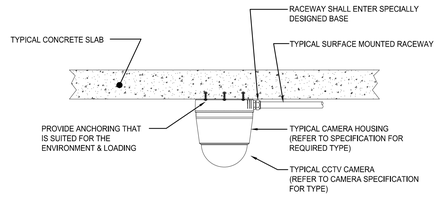

SURFACE MOUNTED
TYPICAL CCTV CAMERA DETAIL
3 SCALE: NONE

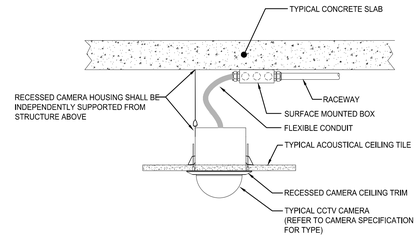

FLUSH MOUNTED
TYPICAL CCTV CAMERA DETAIL
4 SCALE: NONE

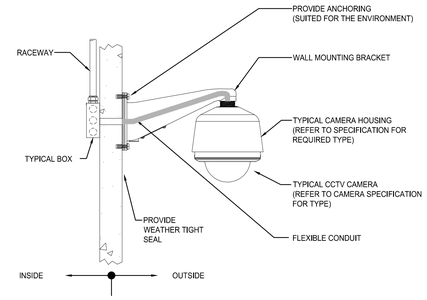

WALL MOUNTED
TYPICAL CCTV CAMERA DETAIL
5 SCALE: NONE

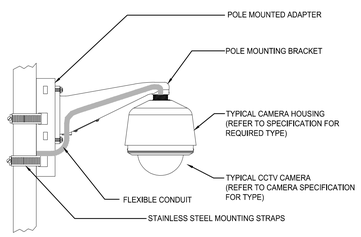

POLE MOUNTED
TYPICAL CCTV CAMERA DETAIL
6 SCALE: NONE

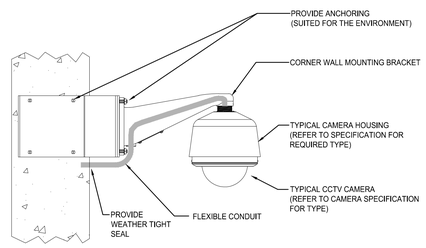

CORNER MOUNTED
TYPICAL CCTV CAMERA DETAIL
7 SCALE: NONE

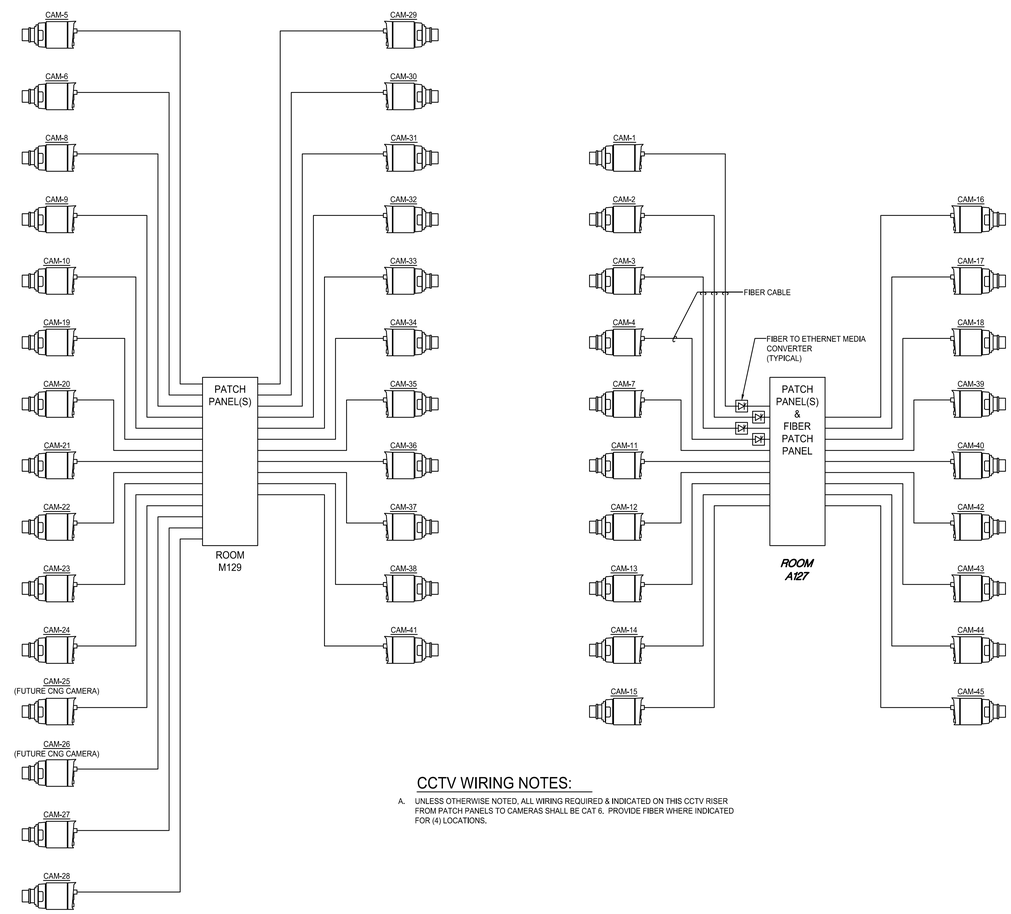

CCTV WIRING NOTES:

A. UNLESS OTHERWISE NOTED, ALL WIRING REQUIRED & INDICATED ON THIS CCTV RISER FROM PATCH PANELS TO CAMERAS SHALL BE CAT 6. PROVIDE FIBER WHERE INDICATED FOR (4) LOCATIONS.

CCTV RISER
1 SCALE: N.T.S.

GREATER LYNCHBURG TRANSIT COMPANY
1301 Kemper Street PO Box 797
Lynchburg, VA 24505-0797

PROJECT ADDRESS:
419 Bradley Dr.
Lynchburg, VA
24501-4901

Operations &
Maintenance Facility

BID DOCUMENTS

wendel
1420 King Street, Suite 510
Alexandria, VA 22314
www.wendelcompanies.com
p:703.299.8718 f:703.299.8719
ALEXANDRIA ARCHITECTURE, ENGINEERING,
LAND SURVEYING & LANDSCAPE ARCHITECTS, INC

Wiley|Wilson
Constant Progress
127 Nationwide Drive, Lynchburg, Virginia 24502-4272
phone 434.947.7777 | fax 434.947.1011 | web wileywilson.com

Civil · Stormwater · Traffic · Transportation
EPR
"Engineering & Planning Resources"
637 Berkshir Circle, Charlottesville, VA 22901
434.202.5082, www.epr-cdvl.com

NOTE:
THIS DOCUMENT, AND THE IDEAS AND DESIGNS INCORPORATED HEREIN, AS AN INSTRUMENT OF PROFESSIONAL SERVICE, IS THE PROPERTY OF THE ARCHITECT AND ENGINEER AND IS NOT TO BE USED IN WHOLE OR IN PART, FOR ANY OTHER PROJECT WITHOUT THE WRITTEN AUTHORIZATION OF THE ARCHITECT AND ENGINEER. UNAUTHORIZED ALTERATION OR ADDITION TO ANY SURVEY DRAWING, DESIGN, SPECIFICATION, PLAN OR REPORT IS PROHIBITED IN ACCORDANCE WITH STATE LAW, CODE AND RULES.

COMMONWEALTH OF VIRGINIA
PETER T. VOMSCHEIDT, SR.
Lic. No. 047134
PROFESSIONAL ENGINEER

Revision Number	Issued by	Revision Description	Revision Date

DWG. TITLE

CCTV RISER AND

CAMERA MOUNTING DETAILS

DATE:	09/24/2014		
SCALE:	AS NOTED		
DWN.	VB	CHK.	PTV
PROJ. No.	444505		

DWG. No.

E601

PA CIRCUIT SCHEDULE

1	MAINTENANCE BAYS, TOOL BOX STORAGE, & COMMON WORK AREA
2	PARTS, BATTERY AND TIRE AREA
3	GENERAL MAINT. AREA
4	ADMIN AREA
5	FUEL AND WASH AREA

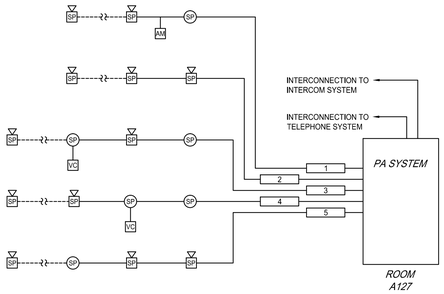

1 PA SYSTEM RISER
SCALE: NONE

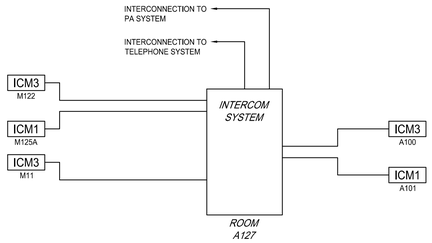

2 INTERCOM SYSTEM RISER
SCALE: NONE

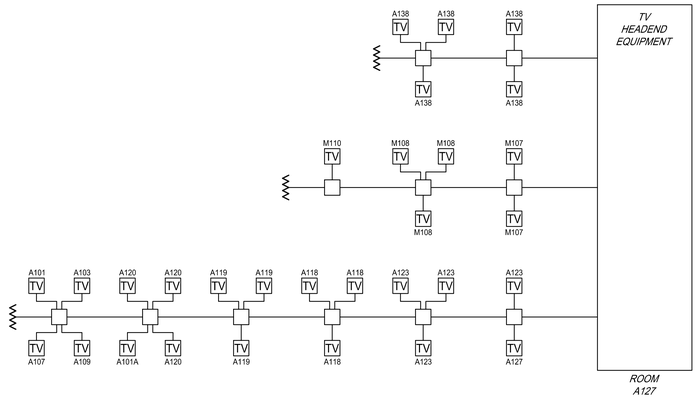

3 TV SYSTEM RISER
SCALE: NONE

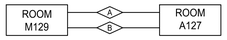

B WIRING:

A. (1) 12-STRAND FIBER (OM4)
(1) 6-STRAND FIBER (SM)

B. (6) CAT6 CABLES

4 DATA RISER
SCALE: NONE

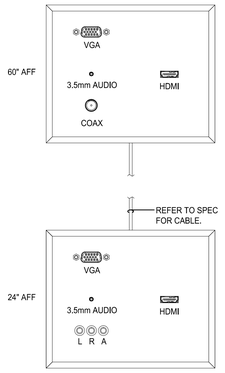

DETAIL NOTE:

A. REFER TO SPECIFICATIONS FOR ADDITIONAL INFORMATION ON COMPONENTS INDICATED.

5 TYPICAL A/V LOCATION
SCALE: NONE

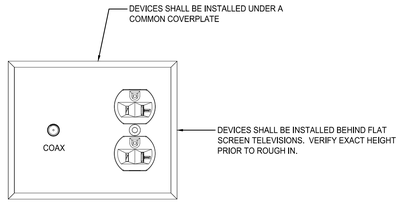

6 TYPICAL TV LOCATION
SCALE: NONE

GREATER LYNCHBURG TRANSIT COMPANY
1301 Kemper Street PO Box 797
Lynchburg, VA 24505-0797

PROJECT ADDRESS:
419 Bradley Dr.
Lynchburg, VA
24501-4901

Operations & Maintenance Facility

BID DOCUMENTS

wendel
1420 King Street, Suite 510
Alexandria, VA 22314
www.wendelcompanies.com
p:703.299.8718 f:703.299.8719
ALEXANDRIA ARCHITECTURE, ENGINEERING, LAND SURVEYING & LANDSCAPE ARCHITECTS, INC

Wiley|Wilson
Constant Progress
127 Nationwide Drive, Lynchburg, Virginia 24502-4272
phone 434.947.7891 | fax 434.947.7851 | web wilsonbow.com

Civil · Stormwater · Traffic · Transportation
E&PR
"Engineering & Planning Resources"
637 Berkshire Circle, Charlottesville, VA 22901
434.202.5082, www.epr-corp.com

NOTE:
THIS DOCUMENT, AND THE IDEAS AND DESIGNS INCORPORATED HEREIN, AS AN INSTRUMENT OF PROFESSIONAL SERVICE, IS THE PROPERTY OF THE ARCHITECT AND ENGINEER AND IS NOT TO BE USED IN WHOLE OR IN PART, FOR ANY OTHER PROJECT WITHOUT THE WRITTEN AUTHORIZATION OF THE ARCHITECT AND ENGINEER. UNAUTHORIZED ALTERATION OR ADDITION TO ANY SURVEY DRAWING, DESIGN, SPECIFICATION, PLAN OR REPORT IS PROHIBITED IN ACCORDANCE WITH STATE LAW, CODE AND RULES.

Revision Number	Issued by	Revision Description	Revision Date

DWG. TITLE

INTERCOM, PA, DATA & TV SYSTEMS RISER DIAGRAMS

DATE	09/24/2014		
SCALE	AS NOTED		
DWN.	VB	CHK.	PTV
PROJ. No.	444505		
DWG. No.	E602		

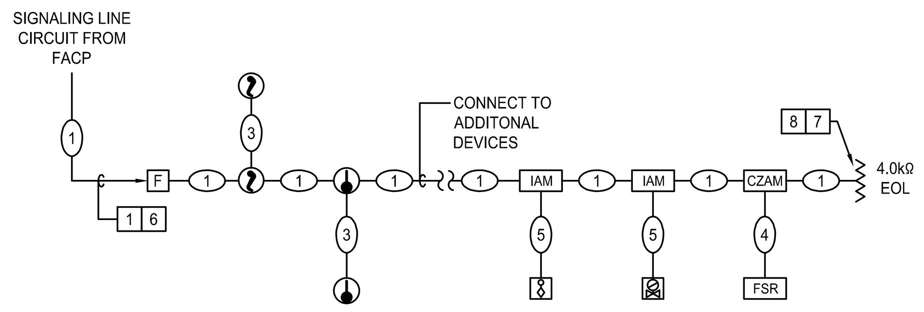

2 TYPICAL WIRING FOR SLC CIRCUIT
SCALE: NONE

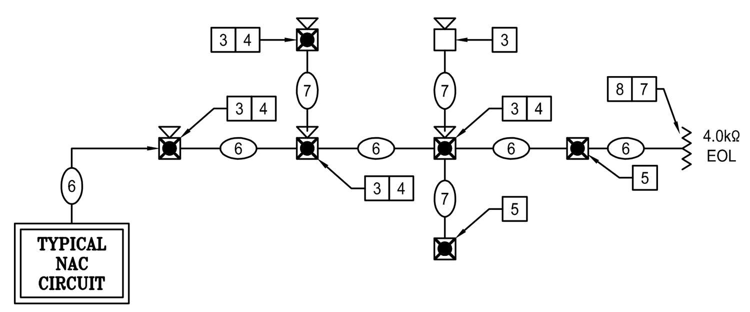

3 TYPICAL NOTIFICATION CIRCUIT
SCALE: NONE

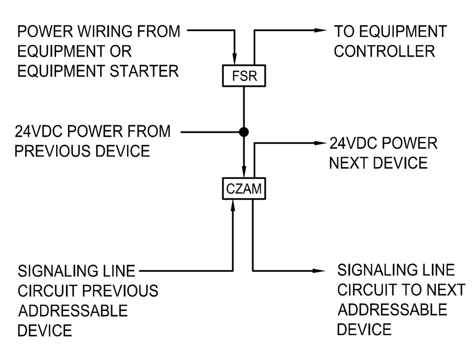

4 TYPICAL FAN SHUTDOWN RELAY WIRING DIAGRAM
SCALE: NONE

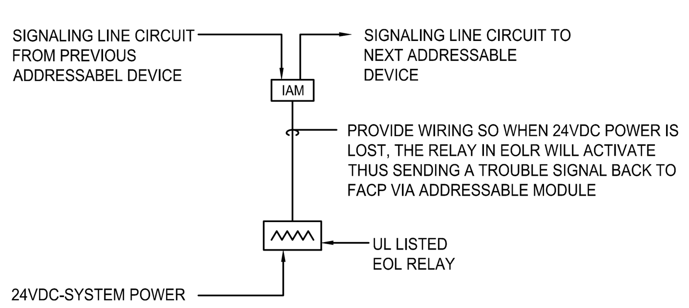

5 TYPICAL WIRING AT END OF 24VDC SYSTEM POWER CIRCUIT
SCALE: NONE

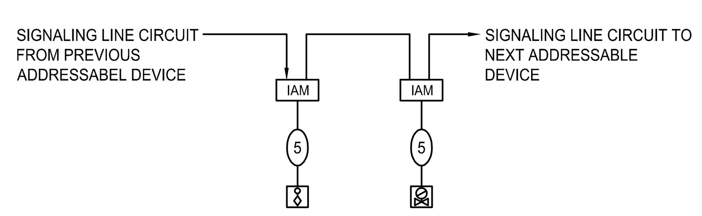

6 TYPICAL SPRINKLER SYSTEM INTERFACE WIRING SCHEMATIC
SCALE: NONE

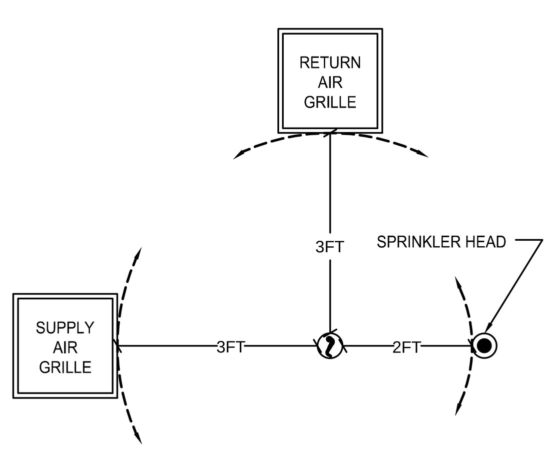

7 SMOKE DETECTOR MINIMUM CLEARANCES
SCALE: NONE

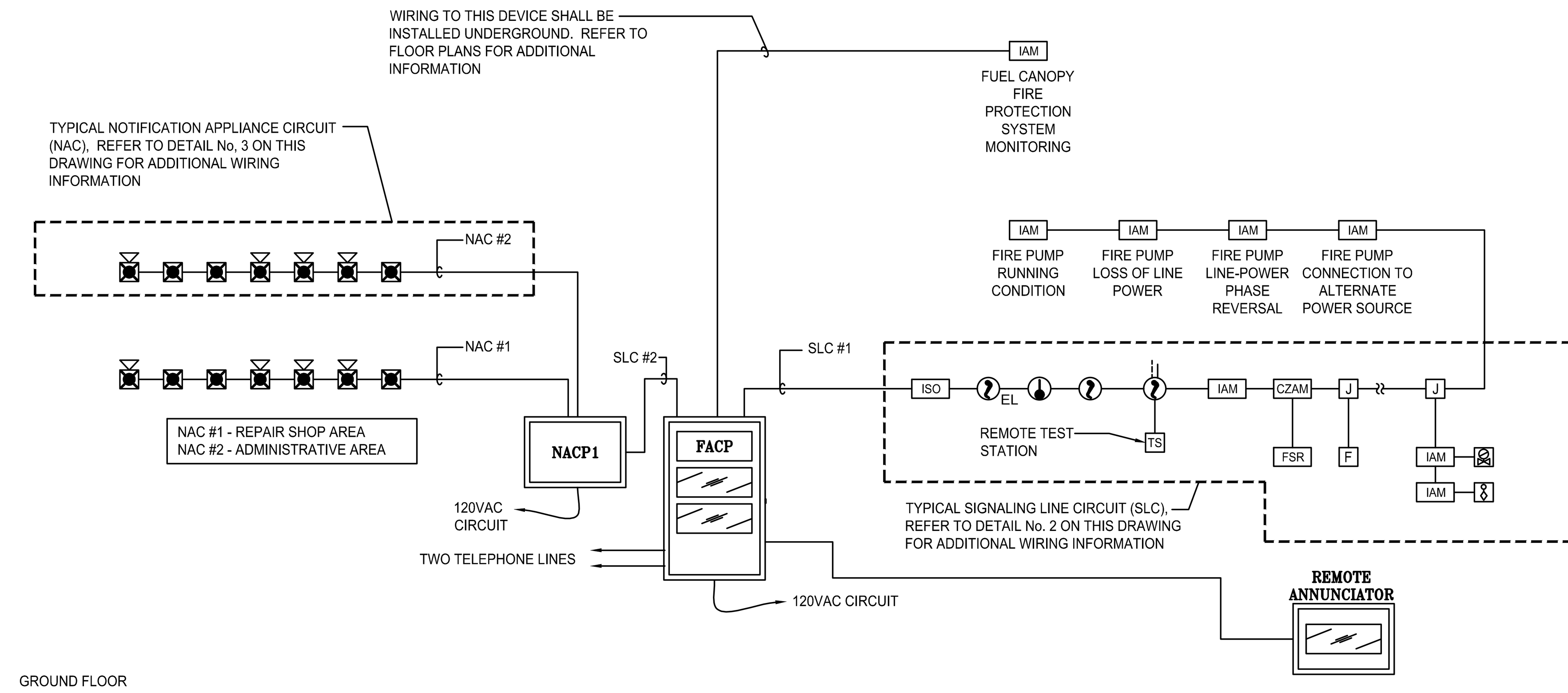

1 FIRE ALARM RISER DIAGRAM
SCALE: NONE

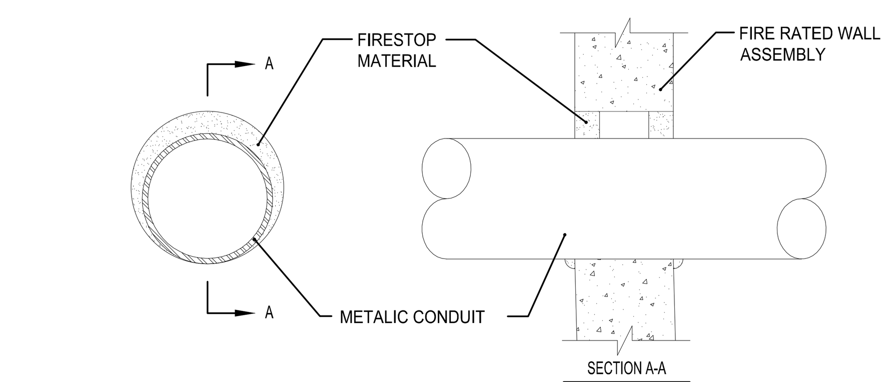

NOTES:
A REFER TO LATEST VERSION OF UL ISSUED DIRECTORY FOR ADDTIONAL INFORMATION FOR REQUIRED WORK ON LISTED THROUGH-PENETRATION FIRESTOP SYSTEMS.

B FIRESTOP MATERIAL-PROVIDE MIN 5/8" THICKNESS OF FILL MATERIAL APPLIED WITHIN THE ANNULUS, FLUSH WITH BOTH SURFACES OF WALL. AT THE POINT OR CONTINUOUS CONTACT LOCATIONS BETWEEN CONDUIT & WALL PROVIDE A MIN 1/2". DIAMETER BEAD OF FIRESTOP MATERIAL THE PIPE-WALL INTERFACE ON BOTH SURFACES OF WALL.

8 UL SYSTEM: WJ-1067 THROUGHT PENETRATION OF 2HR WALL ASSEMBLY
SCALE: NONE

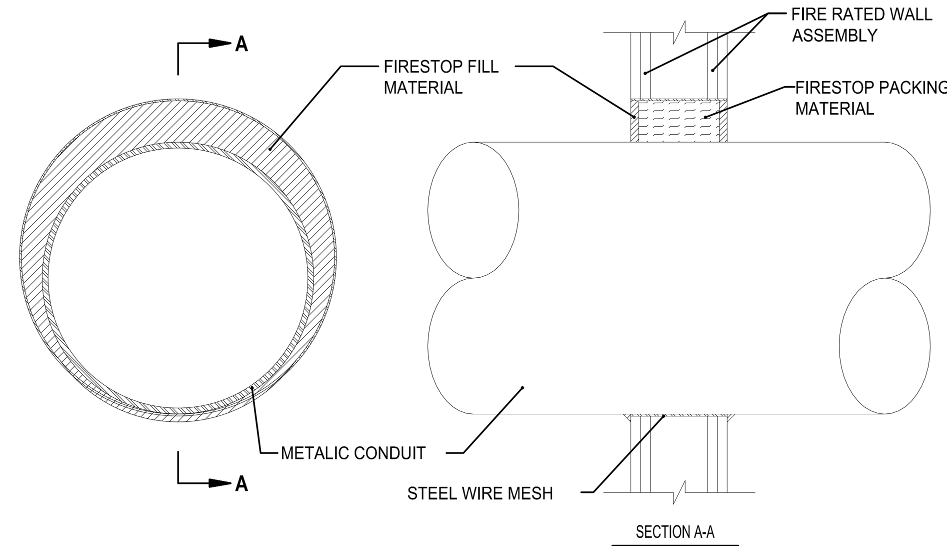

NOTES:
A REFER TO LATEST VERSION OF UL ISSUED DIRECTORY FOR ADDTIONAL INFORMATION FOR REQUIRED WORK ON LISTED THROUGH-PENETRATION FIRESTOP SYSTEMS.

B FIRESTOP SYSTEM-PROVIDE THE FIRESTOP SYSTEM CONSISTING OF THE FOLLOWING:

1 STEEL WIRE MESH-PROVIDE No. 8 STEEL WIRE MESH HAVING A MIN 1" LAP ALONG THE LONGITUDINAL SEAM. LENGTH OF STEEL WIRE MESH TO BE 4-3/4" CENTERED AND FORMED TO FIT PERIPHERY OF THROUGH OPENING.

2 FIRESTOP PACKING MATERIAL-PROVIDE MON. 4-1/2" THICKNESS FO FLEXIBLE URETHANE SHEET FIRMLY PACKED INTO OPENING AS PERMANENT FORM. PACHING MATERIAL TO BE RECESSED FROM BOTH SURFACES OF WALL REQUIRED TO ACCOMMODATE THE REQUIRED THICKNESS OF FILL MATERIAL.

3 FIRESTOP FILL MATERIAL-PROIVDE SEALANT MIN. 1/4" THICKNESS APPLIED WITHIN THE ANNULUS, FLUSH WITH BOTH SURFACES OF WALL. PROVIDE A MIN 1/2" DIAMETER BEAD OF FIRESTOP FILL MATERIAL AT THE WALL/PIPE INTERFGACE ON BOTH SUFACES OF WALL ASSEMBLY.

9 UL SYSTEM: W-L-1058 THROUGHT PENETRATION OF WALL ASSEMBLY
SCALE: NONE

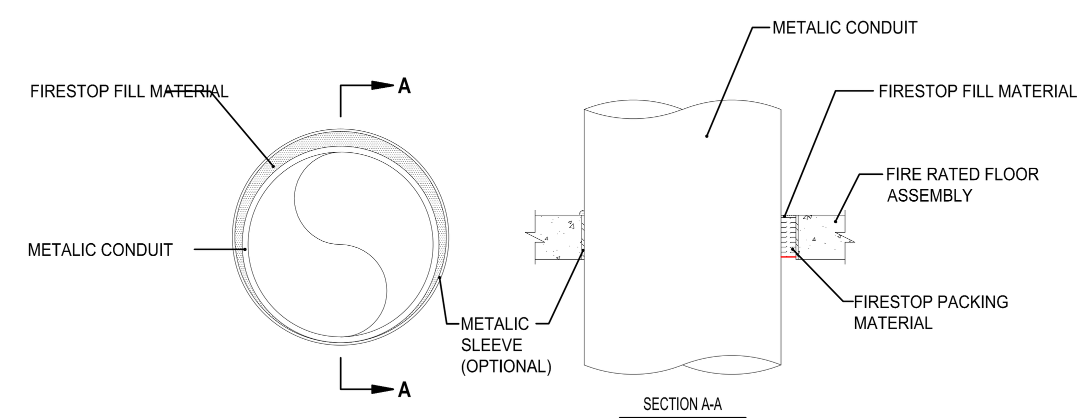

NOTES:
A REFER TO LATEST VERSION OF UL ISSUED DIRECTORY FOR ADDTIONAL INFORMATION FOR REQUIRED WORK ON LISTED THROUGH-PENETRATION FIRESTOP SYSTEMS.

B FIRESTOP SYSTEM-PROVIDE THE FIRESTOP SYSTEM CONSISTING OF THE FOLLOWING:
1 FIRESTOP PACKING MATERIAL-PROVIDE MIN 4" THICKNESS OF MIN 4 PCF MINERAL WOOL BATT INSULATION FIRMLY PACKED INTO OPENING AS A PERMANENT FORM. PACKING MATERIAL TO BE RECESSED FROM TOP SURFACE OF FLOOR OR SLEEVE AS REQUIRED TO ACCOMMODATE THE REQUIRED THICKNESS OF FIRESTOP FILL MATERIAL.

2 FIRESTOP FILL MATERIAL-PROIVDE SEALANT MIN. 1/4" THICKNESS APPLIED WITHIN THE ANNULUS, FLUSH WITH TOP SURFACE OF FLOOR OR SLEEVE AT THE POINT OR CONTINUOUS CONTACT LOCATIONS BETWEEN PENETRANT & CONCRETE OR SLEEVE. PROVIDE A MIN 1/4" DIAMETER BEAD OF FIRESTOP FILL MATERIAL AT THE CONCRETE OR SLEEVE/ PIPE PENETRANT.

10 UL SYSTEM: CAJ-1226 THROUGHT PENETRATION OF 2HR FLOOR ASSEMBLY
SCALE: NONE

GENERAL NOTES:

A. DEVICES INDICATED ARE SHOWN FOR CIRCUITING INTENT ONLY, & SHALL NOT BE CONSIDERED AS ABSOLUTE QUANTITIES, TYPES, LOCATIONS ETC.

B. PROVIDE, AT THE END OF ALL 24V SYSTEM POWER CIRCUIT(S), AN END-OF-LINE RELAY, CONNECTED TO AN IAM, SUPERVISE & MONITOR LOSS OF SYSTEM POWER.

C. INSTALL SMOKE DETECTOR(S) A MINIMUM OF 3'-0" AWAY FROM AIR SUPPLY OR RETURN REGISTERS & DIFFUSERS.

D. DEVICE TERMINAL NUMBERS & CONFIGURATION DIFFER FROM MFGR. TO MFGR. TERMINAL DEVICE NUMBERS & DEVICE CONFIGURATIONS INDICATED ARE FOR GENERAL CONCEPT ONLY, & SHALL BE VERIFIED WITH THE ACTUAL MFGR. SELECTED FOR THE PROJECT.

E. PROVIDE ISOLATOR MODULES ON ALL SLC CIRCUITS AT EVERY 25TH DEVICE.

X DRAWING NOTES:

1. "T" TAPPING OF THE SYSTEM POWER CIRCUIT, IS NOT PERMITTED.
2. WIRING BETWEEN CONTROL TYPE ZONE ADDRESSABLE MODULES (CZAM) & ELEVATOR CONTROLLERS SHALL BE THROUGH NORMALLY CLOSED DRY CONTACT CLOSURES IN THE MODULE (UN-POWERED).
3. REFER TO FIRE ALARM RISER (THIS DRAWING) FOR HORN/STROBE NAC CIRCUIT ASSIGNMENTS.
4. STROBE LIGHTS SHALL BE WIRED SO AS TO ALLOW STROBES TO REMAIN FLASHING, UPON SILENCING OF THE AUDIBLE ALARM NOTIFICATION APPLIANCES.
5. "T" TAPPING OF THE AUDIBLE OR VISUAL ALARM NOTIFICATION CIRCUIT WIRING, IS NOT PERMITTED.
6. A SYSTEM POWER 24VDC SUPERVISED CIRCUIT SHALL BE INSTALLED ALONG WITH THE ENTIRE SLC PATH, FROM THE FIRST ALARM INITIATING DEVICE IN THE CIRCUIT, TO THE LAST ALARM INITIATING DEVICE IN THE CIRCUIT. SINGLE DEVICE TAKE-OFFS FROM THE MAIN PATH SHALL NOT BE REQUIRED TO CARRY THE SYSTEM POWER CIRCUIT.
7. PROVIDE, AT THE END OF ALL SYSTEM POWER CIRCUITS, AN END-OF-LINE RELAY & AN INDIVIDUAL ADDRESSABLE POINT MODULE (IAM), CONNECTED TO SUPERVISE & MONITOR LOSS OF SYSTEM POWER.
8. INSTALL AFTER LAST ALARM INITIATING DEVICE IN THE CIRCUIT.
9. PROVIDE INTERFACE BETWEEN CONVENTIONAL TYPE HEAT DETECTORS & ADDRESSABLE FIRE ALARM SYSTEM.

FIRE ALARM SYSTEM WIRING NOTES:

1. (1) SIGNALING LINE CIRCUIT CABLE + (1) SYSTEM POWER CABLE (24VDC) - (2) #18 AWG & (2) #14 AWG
2. (1) SIGNALING LINE CIRCUIT CABLE - (2) #18 AWG
3. (2) SIGNALING LINE CIRCUIT CABLES (1 IN & 1 OUT) - (2) #18 AWG & (2) #18 AWG
4. (1) SYSTEM POWER CIRCUIT CABLE (24VDC) - (2) #14 AWG
5. (1) NON DATA CONDUCTORS - (2) #14 AWG IN FLEXIBLE METAL RACEWAY.
6. (1) NOTIFICATION APPLIANCE CIRCUIT CABLE - (2) #14 AWG
7. (2) NOTIFICATION APPLIANCE CIRCUIT CABLES (1 IN & 1 OUT) - (2) #14 AWG & (2) #14 AWG

* ALL WIRING REQUIREMENTS ARE TO BE VERIFIED WITH SELECTED FIRE ALARM SYSTEM PROVIDER. ADDITIONAL COMPENSATION WILL NOT BE PROVIDED FOR FAILURE TO PROVIDE WIRING PER EQUIPMENT MANUFACTURER'S REQUIREMENTS.

GREATER LYNCHBURG TRANSIT COMPANY
1301 Kemper Street PO Box 797
Lynchburg, VA 24505-0797

PROJECT ADDRESS:
419 Bradley Dr.
Lynchburg, VA
24501-4901

Operations & Maintenance Facility

BID DOCUMENTS

wendel
1420 King Street, Suite 510
Alexandria, VA 22314
www.wendelcompanies.com
p:703.299.8718 f:703.299.8719
ALEXANDRIA ARCHITECTURE, ENGINEERING, LAND SURVEYING & LANDSCAPE ARCHITECTS, INC

Wiley|Wilson Constant Progress
127 Nationwide Drive, Lynchburg, Virginia 24502-4272
phone 434.947.1901 | fax 434.947-1601 | web wileywilson.com

Civil . Stormwater . Traffic . Transportation
WBE/DBE
E&PR
"Engineering & Planning Resources"
637 Berkmar Circle, Charlottesville, VA 22901
434.202.5082. www.epr-corp.com

NOTE:
THIS DOCUMENT, AND THE IDEAS AND DESIGNS INCORPORATED HEREIN, AS AN INSTRUMENT OF PROFESSIONAL SERVICE, IS THE PROPERTY OF THE ARCHITECT AND ENGINEER AND IS NOT TO BE USED IN WHOLE OR IN PART, FOR ANY OTHER PROJECT WITHOUT THE WRITTEN AUTHORIZATION OF THE ARCHITECT AND ENGINEER. UNAUTHORIZED ALTERATION OR ADDITION TO ANY SURVEY DRAWING, DESIGN, SPECIFICATION, PLAN OR REPORT IS PROHIBITED IN ACCORDANCE WITH STATE LAW, CODE AND RULES.

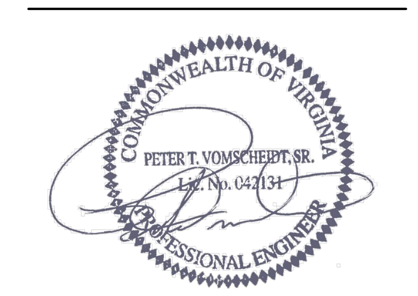

Revision Number	Issued by	Revision Description	Revision Date

DWG. TITLE
FIRE ALARM SYSTEM RISER, NOTES & DETAILS

DATE	09/24/2014		
SCALE	AS NOTED		
DWN.	VB	CHK.	PTV
PROJ. No.	444505		
DWG. No.	E603		

DATE/TIME PRINTED: 9/23/2014 6:22:05 PM FILEPATH: P:\444505 GLTC OM SCHEMATIC DESIGN\16. CAD\DWG\ELEC\COMPOSITE\E603

GROUNDING ABBREVIATIONS:

EGC	EQUIPMENT GROUNDING CONDUCTOR
BJ	BONDING JUMPER
EBJ	EQUIPMENT BONDING JUMPER
GEC	GROUNDING ELECTRODE CONDUCTOR
G	GROUND BUS
NC	NEUTRAL CONDUCTOR
N	NEUTRAL BUS
SGC	SUPPLEMENTAL GROUND CONDUCTOR

GENERAL NOTES:

A. EQUIPMENT GROUNDING CONDUCTOR SHALL BE PROVIDED WITH EACH FEEDER/BRANCH CIRCUIT. SEE CONDUIT AND CABLE SCHEDULES FOR QUANTITY AND SIZES.

B. GROUNDING ELECTRODE CONDUCTOR SHALL BE INSULATED #4/0 IN 3/4" CONDUIT UNLESS OTHERWISE INDICATED.

C. SUPPLEMENTAL GROUND CONDUCTORS SHALL BE INSULATED #4/0 IN 3/4:" CONDUIT .

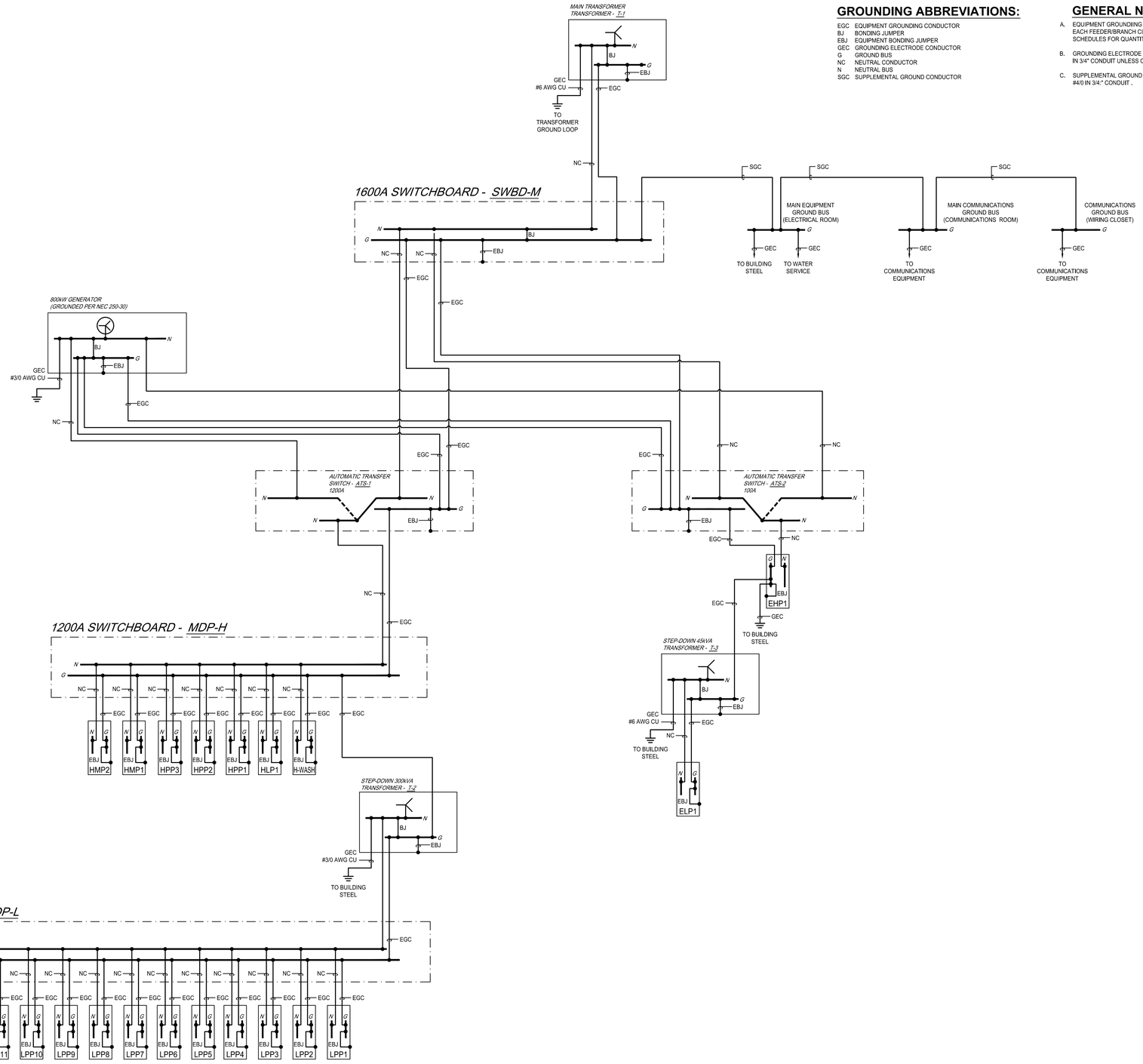

1 ELECTRICAL GROUNDING DIAGRAM
SCALE: NONE

GREATER LYNCHBURG TRANSIT COMPANY
1301 Kemper Street PO Box 797
Lynchburg, VA 24505-0797

PROJECT ADDRESS:
419 Bradley Dr.
Lynchburg, VA
24501-4901

Operations &
Maintenance Facility

BID DOCUMENTS

wendel
1420 King Street, Suite 510
Alexandria, VA 22314
www.wendelcompanies.com
p:703.299.8718 f:703.299.8719
ALEXANDRIA ARCHITECTURE, ENGINEERING, LAND SURVEYING & LANDSCAPE ARCHITECTS, INC

Wiley|Wilson
Constant Progress
101 Nationwide Drive, Lynchburg, Virginia 24502-4273
phone 434.947.7777 | fax 434.947.1011 | web wileywilson.com

Civil · Stormwater · Traffic · Transportation
EPR
"Engineering & Planning Resources"
637 Berkshire Circle, Charlottesville, VA 22901
434.202.5082, www.epr-cdm.com

NOTE:
THIS DOCUMENT, AND THE IDEAS AND DESIGNS INCORPORATED HEREIN, AS AN INSTRUMENT OF PROFESSIONAL SERVICE, IS THE PROPERTY OF THE ARCHITECT AND ENGINEER AND IS NOT TO BE USED IN WHOLE OR IN PART FOR ANY OTHER PROJECT WITHOUT THE WRITTEN AUTHORIZATION OF THE ARCHITECT AND ENGINEER. ANY REPRODUCTION OF THIS DOCUMENT OR ANY PART THEREOF, INCLUDING DESIGN, SPECIFICATION, PLAN OR REPORT IS PROHIBITED IN ACCORDANCE WITH STATE LAW, CODE AND RULES.

COMMONWEALTH OF VIRGINIA
PETER T. VOMSCHERIL JR.
Reg. No. 042134
PROFESSIONAL ENGINEER

Revision Number	Issued by	Revision Description	Revision Date

DWG. TITLE

GROUNDING SYSTEM
SINGLE LINE DIAGRAM

DATE	09/24/2014
SCALE	AS NOTED
DWN.	RB
CHK.	PTV
PROJ. No.	444505
DWG. No.	E604

DATA NAME: 444505 - E604.DWG | DATE: 9/24/2014 3:11:11 PM | USER NAME: P:\444505 GLTC OPS FACILITY\CAD\DWG\E-DRAWINGS\