SUPERVISED BY CITY_OF_LYNCHBURG
PROJECT MANAGER STEVE_CAMPBELL.MATTERN & CRAIG (540)-345-9342
SURVEYED BY MATTERN_&_CRAIG_(540)-345-9342
DESIGNED BY MIKE_AGEE.MATTERN_&_CRAIG

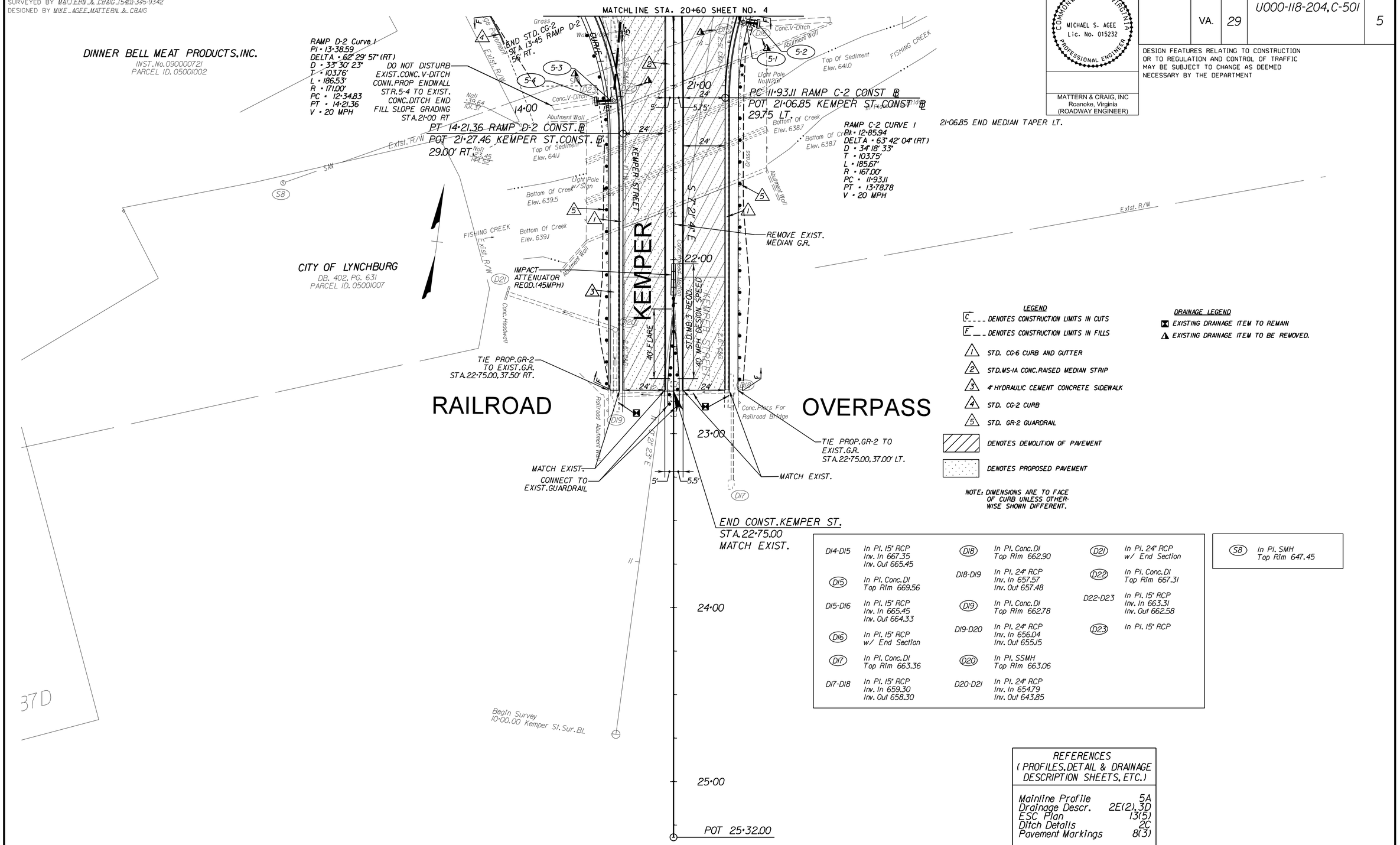

REVISED	STATE	ROUTE	PROJECT	SHEET NO.
	VA.	29	U000-118-204, C-501	5

COMMONWEALTH OF VIRGINIA
MICHAEL S. AGEE
Lic. No. 015232
PROFESSIONAL ENGINEER

MATTERN & CRAIG, INC
Roanoke, Virginia
(ROADWAY ENGINEER)

DESIGN FEATURES RELATING TO CONSTRUCTION OR TO REGULATION AND CONTROL OF TRAFFIC MAY BE SUBJECT TO CHANGE AS DEEMED NECESSARY BY THE DEPARTMENT

LEGEND

- C ___ DENOTES CONSTRUCTION LIMITS IN CUTS
- F ___ DENOTES CONSTRUCTION LIMITS IN FILLS
- 1 STD. CG-6 CURB AND GUTTER
- 2 STD. MS-1A CONC. RAISED MEDIAN STRIP
- 3 4" HYDRAULIC CEMENT CONCRETE SIDEWALK
- 4 STD. CG-2 CURB
- 5 STD. GR-2 GUARDRAIL
- DENOTES DEMOLITION OF PAVEMENT
- DENOTES PROPOSED PAVEMENT

NOTE: DIMENSIONS ARE TO FACE OF CURB UNLESS OTHERWISE SHOWN DIFFERENT.

DRAINAGE LEGEND

- EXISTING DRAINAGE ITEM TO REMAIN
- EXISTING DRAINAGE ITEM TO BE REMOVED.

DI4-DI5	In Pl. 15" RCP Inv. In 667.35 Inv. Out 665.45	DI8	In Pl. Conc. DI Top Rim 662.90	D21	In Pl. 24" RCP w/ End Section
DI5	In Pl. Conc. DI Top Rim 669.56	DI8-DI9	In Pl. 24" RCP Inv. In 657.57 Inv. Out 657.48	D22	In Pl. Conc. DI Top Rim 667.31
DI5-DI6	In Pl. 15" RCP Inv. In 665.45 Inv. Out 664.33	DI9	In Pl. Conc. DI Top Rim 662.78	D22-D23	In Pl. 15" RCP Inv. In 663.31 Inv. Out 662.58
DI6	In Pl. 15" RCP w/ End Section	DI9-D20	In Pl. 24" RCP Inv. In 656.04 Inv. Out 655.15	D23	In Pl. 15" RCP
DI7	In Pl. Conc. DI Top Rim 663.36	D20	In Pl. SSMH Top Rim 663.06		
DI7-DI8	In Pl. 15" RCP Inv. In 659.30 Inv. Out 658.30	D20-D21	In Pl. 24" RCP Inv. In 654.79 Inv. Out 643.85		

S8	In Pl. SMH Top Rim 647.45

REFERENCES
(PROFILES, DETAIL & DRAINAGE DESCRIPTION SHEETS, ETC.)

Mainline Profile	5A
Drainage Descr.	2E(2), 3D
ESC Plan	13(5)
Ditch Details	2C
Pavement Markings	8(3)

SCALE 0 25' 50'

PROJECT	SHEET NO.
U000-118-204	5

SUPERVISED BY CITY OF LYNCHBURG
PROJECT MANAGER STEVE CAMPBELL MATTERN & CRAIG (540)-345-9342
SURVEYED BY MATTERN & CRAIG (540)-345-9342
DESIGNED BY MIKE AGEE MATTERN & CRAIG

COMMONWEALTH OF VIRGINIA
MICHAEL S. AGEE
Lic. No. 015232
PROFESSIONAL ENGINEER

MATTERN & CRAIG, INC
Roanoke, Virginia
(ROADWAY ENGINEER)

REVISED	STATE	STATE ROUTE	STATE PROJECT	SHEET NO.
	VA.	29	U000-118-204, C-501	5A

DESIGN FEATURES RELATING TO CONSTRUCTION OR TO REGULATION AND CONTROL OF TRAFFIC MAY BE SUBJECT TO CHANGE AS DEEMED NECESSARY BY THE DEPARTMENT

PROFILE: KEMPER STREET

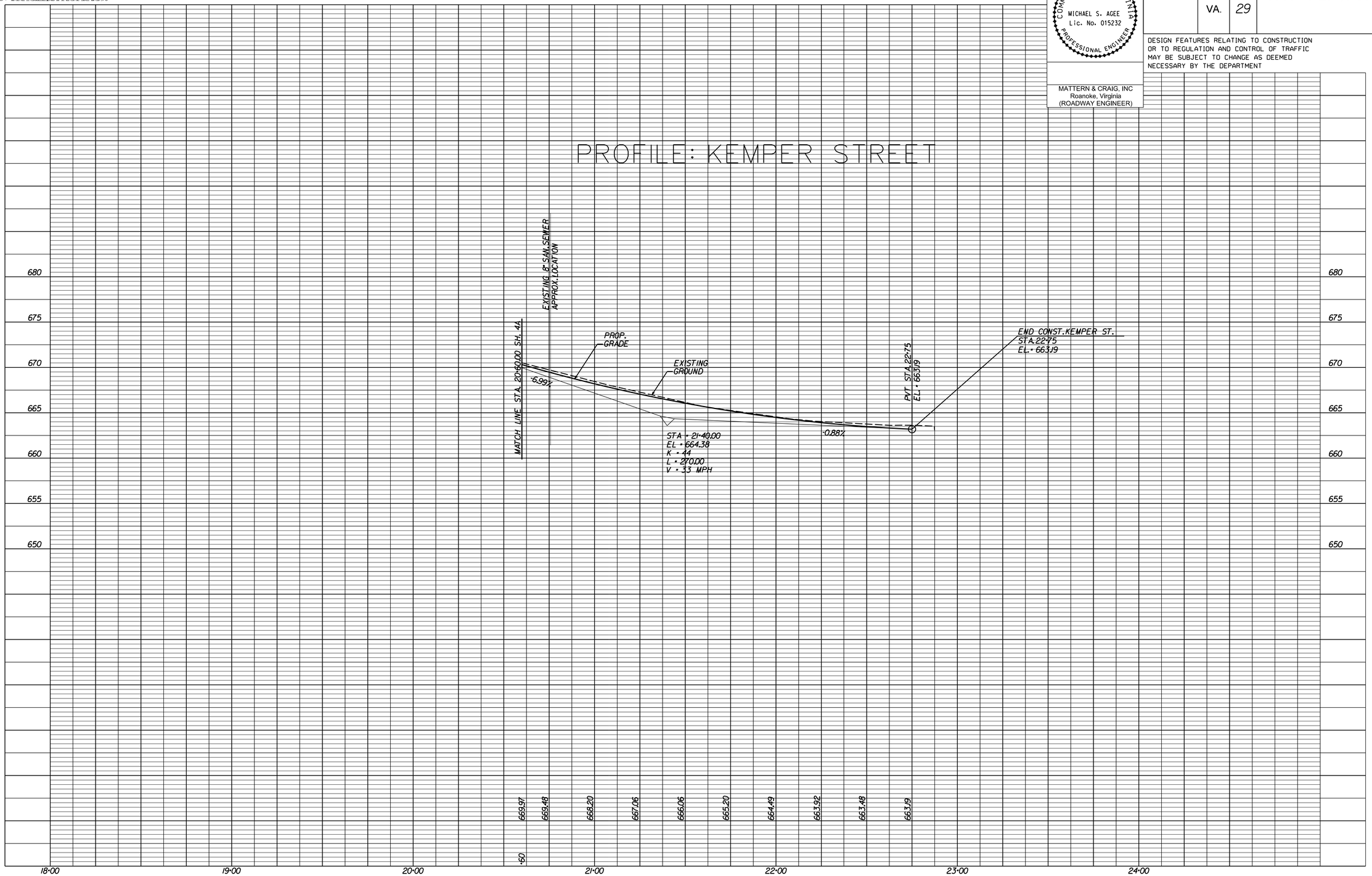

PROJECT	SHEET NO.
U000-118-204	5A

SUPERVISED BY CITY OF LYNCHBURG
PROJECT MANAGER STEVE CAMPBELL, MATTERN & CRAIG (540)-345-9342
SURVEYED BY MATTERN & CRAIG (540)-345-9342
DESIGN BY MIKE AGEE, MATTERN & CRAIG

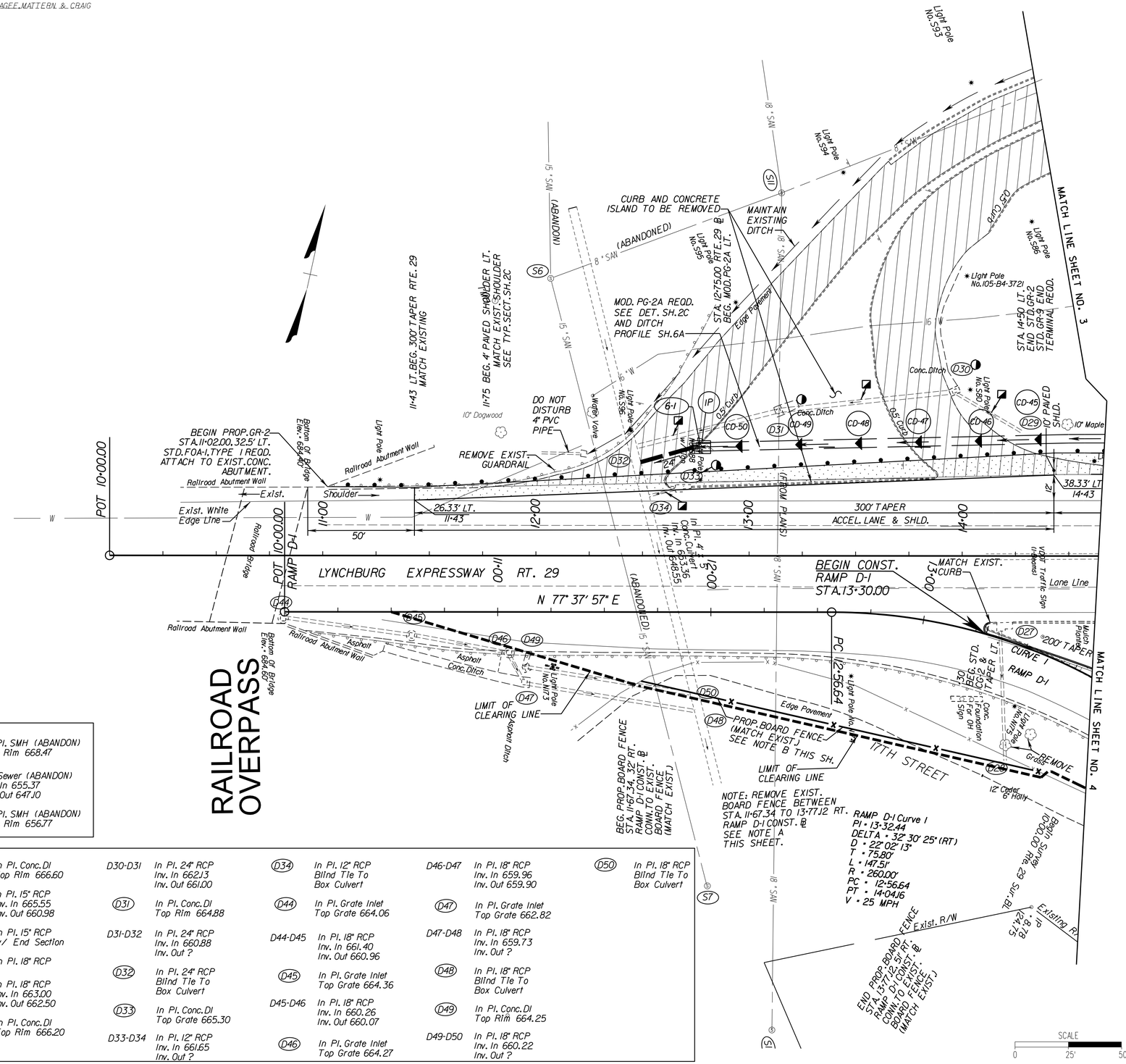

(S6)	In Pl. SMH (ABANDON) Top Rim 668.47
S6-S7	15" Sewer (ABANDON) Inv In 655.37 Inv Out 647.10
(S7)	In Pl. SMH (ABANDON) Top Rim 656.77

(D27)	In Pl. Conc. DI Top Rim 666.60	D30-D31	In Pl. 24" RCP Inv. In 662.13 Inv. Out 661.00	(D34)	In Pl. 12" RCP Blind Tie To Box Culvert	D46-D47	In Pl. 18" RCP Inv. In 659.96 Inv. Out 659.90	(D50)	In Pl. 18" RCP Blind Tie To Box Culvert
D27-D28	In Pl. 15" RCP Inv. In 665.55 Inv. Out 660.98	(D31)	In Pl. Conc. DI Top Rim 664.88	(D44)	In Pl. Grate Inlet Top Grate 664.06	(D47)	In Pl. Grate Inlet Top Grate 662.82		
(D28)	In Pl. 15" RCP w/ End Section	D31-D32	In Pl. 24" RCP Inv. In 660.88 Inv. Out ?	D44-D45	In Pl. 18" RCP Inv. In 661.40 Inv. Out 660.96	D47-D48	In Pl. 18" RCP Inv. In 659.73 Inv. Out ?		
(D29)	In Pl. 18" RCP	(D32)	In Pl. 24" RCP Blind Tie To Box Culvert	(D45)	In Pl. Grate Inlet Top Grate 664.36	(D48)	In Pl. 18" RCP Blind Tie To Box Culvert		
D29-D30	In Pl. 18" RCP Inv. In 663.00 Inv. Out 662.50	(D33)	In Pl. Conc. DI Top Grate 665.30	D45-D46	In Pl. 18" RCP Inv. In 660.26 Inv. Out 660.07	(D49)	In Pl. Conc. DI Top Rim 664.25		
(D30)	In Pl. Conc. DI Top Rim 666.20	D33-D34	In Pl. 12" RCP Inv. In 661.65 Inv. Out ?	(D46)	In Pl. Grate Inlet Top Grate 664.27	D49-D50	In Pl. 18" RCP Inv. In 660.22 Inv. Out ?		

COMMONWEALTH OF VIRGINIA
MICHAEL S. AGEE
Lic. No. 015232
PROFESSIONAL ENGINEER

MATTERN & CRAIG, INC
Roanoke, Virginia
(ROADWAY ENGINEER)

REVISED	STATE	STATE ROUTE	STATE PROJECT	SHEET NO.
	VA.	29	U000-118-204, C-501	6

DESIGN FEATURES RELATING TO CONSTRUCTION OR TO REGULATION AND CONTROL OF TRAFFIC MAY BE SUBJECT TO CHANGE AS DEEMED NECESSARY BY THE DEPARTMENT

LEGEND

C - - - DENOTES CONSTRUCTION LIMITS IN CUTS
F - - - DENOTES CONSTRUCTION LIMITS IN FILLS
REMOVE EXIST. RAMPS AND TOPSOIL AND SEED
DENOTES PROPOSED PAVEMENT
(IP) DENOTES INLET PROTECTION: STD. AND SPEC. 3.07

DRAINAGE LEGEND

EXISTING DRAINAGE ITEM TO BE ABANDONED.
REMOVE EXISTING STRUCTURE.

NOTE: DIMENSIONS ARE TO FACE OF CURB UNLESS OTHERWISE SHOWN DIFFERENT.

NOTE A: REMOVE EXIST BOARD FENCE BETWEEN STA. 11+67.34 TO STA. 13+77.12 RAMP D-1 CONST. @ RT. CONTRACTOR SHALL CLEAR BRUSH AND TREES BETWEEN LIMIT OF CLEARING LINE SHOWN ON PLAN AND RAMP D-1 CONST. @ TO PROVIDE CLEAR SIGHT DISTANCE BETWEEN R.R. BRIDGE AND VEHICLE DETECTION AREA ON RAMP D-1 AND D-2 STA. 16+00. COST TO CLEAR AREA AND REMOVE FENCE TO BE INCLUDED IN PRICE BID FOR "CLEARING AND GRUBBING.

NOTE B: BOARD FENCE SHALL MATCH THE EXISTING BOARD FENCE IN PLACE. BOARD FENCE SHALL BE INSTALLED SO THAT THE TOPS FORM A REGULAR GRADE LINE. BOARD FENCE SHALL CONFORM TO SECTION 507, FENCES OF THE 2007 VDOT ROAD AND BRIDGE SPECIFICATIONS. BOARD FENCE SHALL BE MEASURED AND PAID FOR IN UNITS OF LINEAR FEET. COMPLETE IN PLACE AND SHALL INCLUDE HARDWARE, CLEARING, LEVELING, PREPARING TERRAIN AT THE FENCE LEVEL, CORNER POSTS, LINE POSTS, BRACING, ATTACHING TO POSTS AND DISPOSING OF SURPLUS AND UNSUITABLE MATERIAL.

REFERENCES (PROFILES, DETAIL & DRAINAGE DESCRIPTION SHEETS, ETC.)

Drainage Descr.	2E(2), 3D
Ditch Details	2C
Ditch Profile	6A
Pavement Marking	8(3)

PROJECT	SHEET NO.
U000-118-204	6

SUPERVISED BY CITY OF LYNCHBURG
PROJECT MANAGER STEVE CAMPBELL MATTERN & CRAIG (540)-345-9342
SURVEYED BY MATTERN & CRAIG (540)-345-9342
DESIGNED BY MIKE AGEE MATTERN & CRAIG

COMMONWEALTH OF VIRGINIA
MICHAEL S. AGEE
Lic. No. 015232
PROFESSIONAL ENGINEER

MATTERN & CRAIG, INC
Roanoke, Virginia
(ROADWAY ENGINEER)

REVISED	STATE	STATE ROUTE	STATE PROJECT	SHEET NO.
	VA.	29	U000-118-204, C-501	6A

DESIGN FEATURES RELATING TO CONSTRUCTION OR TO REGULATION AND CONTROL OF TRAFFIC MAY BE SUBJECT TO CHANGE AS DEEMED NECESSARY BY THE DEPARTMENT

DITCH PROFILE LEFT STA. 12+20 - 21+00 RTE. 29 CONST. ℄

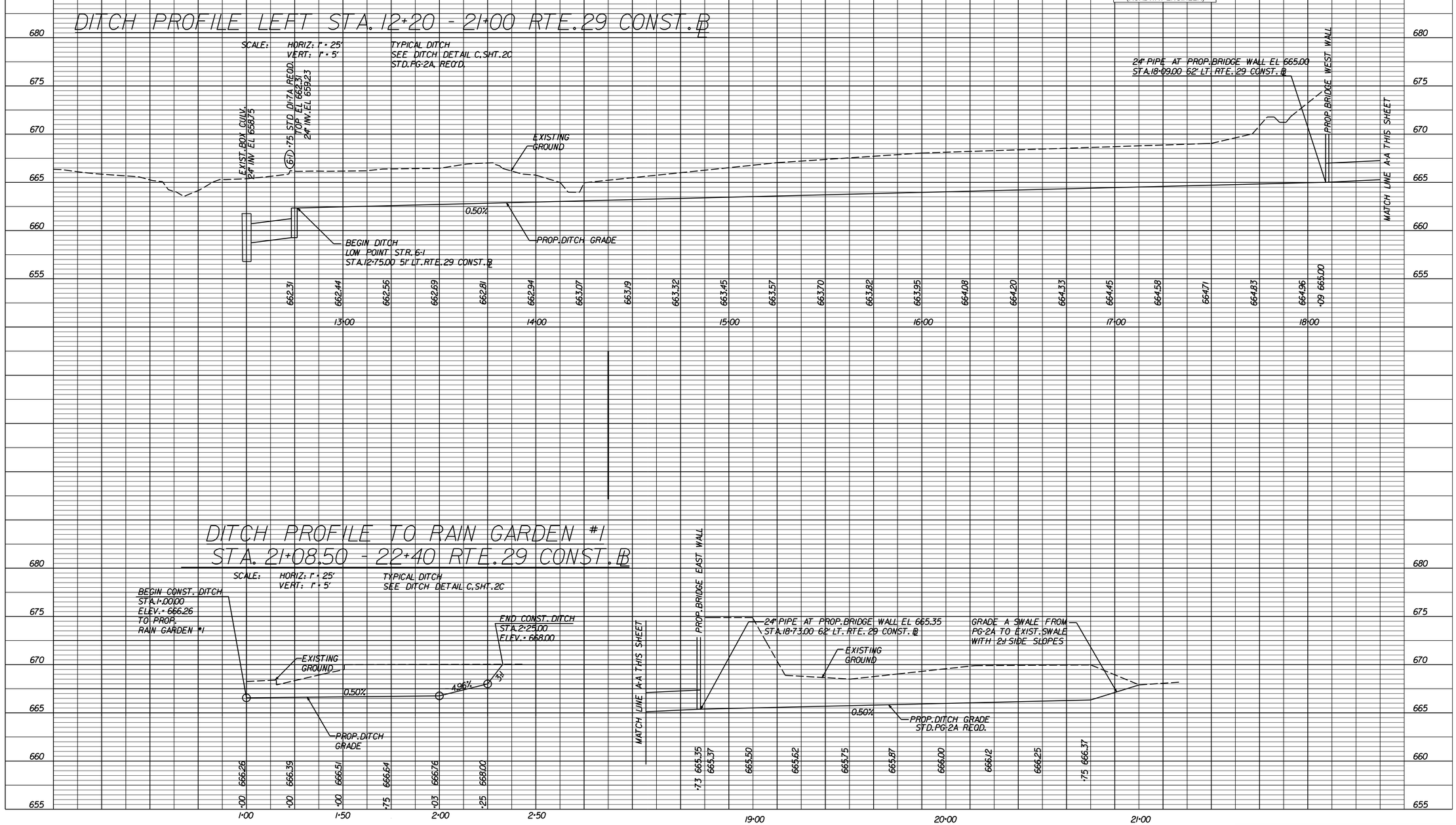

DITCH PROFILE TO RAIN GARDEN #1
STA. 21+08.50 - 22+40 RTE. 29 CONST. ℄

PROJECT	SHEET NO.
U000-118-204	6A

DEPARTMENT OF PUBLIC WORKS
ENGINEERING DIVISION

PROPOSED BRIDGE REPLACEMENT KEMPER STREET (ROUTE 460) OVER LYNCHBURG EXPRESSWAY (ROUTE 29A)

STATE PROJECT NUMBER U000-118-204, C-501, B-601

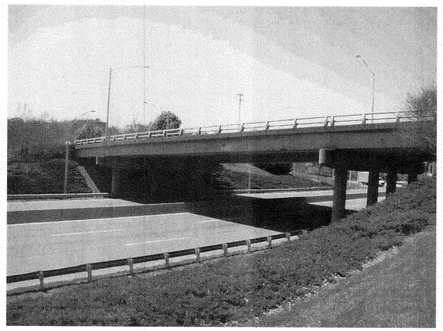

EXISTING STRUCTURE NO. 1851

GENERAL CONSTRUCTION NOTES:

This project shall be constructed in accordance with:
1. VDOT Road and Bridge Specifications, 2007
2. VDOT Road and Bridge Standards, 2008
3. City of Lynchburg Manual of Specifications and Standard Details, Nov. 2009
4. Virginia Work Area Protection Manual dated June, 2011 and latest revisions, and as amended by the Supplemental Specifications & contract documents for this project and these drawings.

INDEX OF SHEETS

Sheet No.	Description
7(1)	Title sheet, index of sheets and table of revisions
7(2)	Plan, profile, design exceptions and general notes
7(3)	Estimated quantities, bridge layout and substructure layout
7(4)	Abutment A - Plan & Elevation
7(5)	Abutment A - Details & Footing Plan
7(6)	Abutment B - Plan & Elevation
7(7)	Abutment B - Details & Footing Plan
7(8)	Transverse section
7(9)	Deck plan and elevations
7(10)	Deck extension details
7(11)	Erection diagram and top of slab elevations
7(12)	Prestressed Concrete Bulb-T (PCBT-45)
7(13)	Prestressed Concrete Bulb-T
	miscellaneous beam details
7(14)	Prestressed Concrete Bulb-T
	miscellaneous beam details
7(15)	Prestressed Concrete Bulb-T (PCBT-45)
	intermediate diaphragm details
7(16)	Prestressed beam bearing details
7(17)	Bridge railing and notes
7(18)	Railing connections and notes
7(19)	Bridge conduit system
7(20)	Water line system
7(21)	Reinforcing steel schedule - Superstructure
7(22)	Reinforcing steel schedule - Abutments
7(23)	Engineering Geology 1
7(24)	Engineering Geology 2
7(25)	Engineering Geology 3

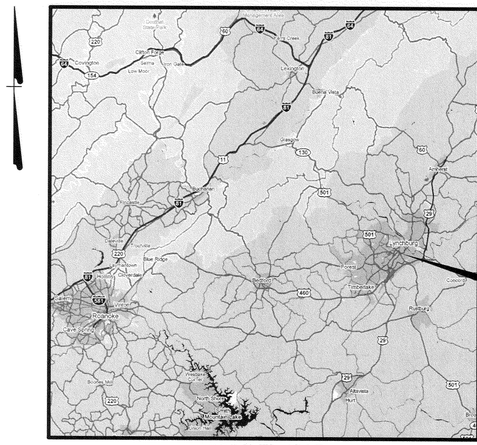

VICINITY MAP
Not to scale

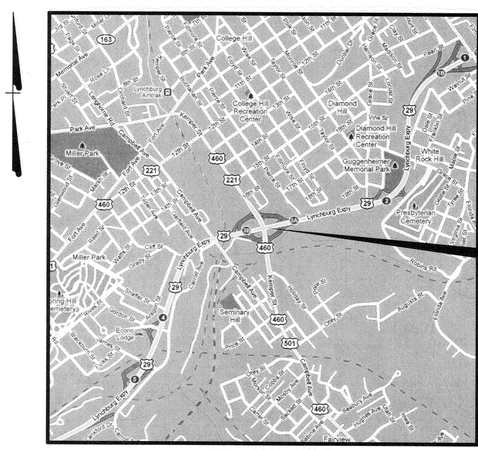

LOCATION MAP
Not to scale

COMMONWEALTH OF VIRGINIA
7/29/14
CHAD M. THOMAS
Lic. No. 036962
PROFESSIONAL ENGINEER

MATTERN & CRAIG
ROANOKE, VA
STRUCTURAL ENGINEER

APPROVED	
DATE	CITY ENGINEER
DATE	EROSION & SEDIMENT CONTROL ADMINISTRATOR
DATE	UTILITIES ENGINEER
DATE	CONSTRUCTION MANAGER

Rev. No.	Sheets Revised	Date

TABLE OF REVISIONS

PROJECT NO.: U000-118-204, C-501, B-601
DATE: 7/18/2014
SHEET: 1 OF 25

Revisions	Date

Issue Date: 31-JULY-2014
Drawn By: DKA
Designed By: MLF
Checked By: CMT
Date: 29-JULY-2014

Mattern & Craig
CONSULTING ENGINEERS • SURVEYORS
701 FIRST STREET, S.W.
ROANOKE, VIRGINIA 24016
(540) 345-9342
FAX (540) 345-7691

BRIDGE REPLACEMENT - KEMPER STREET (ROUTE 460)
OVER LYNCHBURG EXPRESSWAY (ROUTE 29A)

TITLE SHEET, INDEX OF SHEETS AND TABLE OF REVISIONS

CITY OF LYNCHBURG, VIRGINIA

Vertical Scale: N/A
Horizontal Scale: N/A
Commission Number: 2387E
Sheet No.: 7(1)

STATE	FEDERAL AID ROUTE	FEDERAL AID PROJECT	STATE ROUTE	STATE PROJECT	SHEET NO.
VA.	—	—	29	U000-118-204, C-501, B-601	7(2)
NBIS Number: 000000000020571			UPC No. 94745		
Federal Oversight Code: NFO			FHWA Construction and Scour Code: X281-SN		

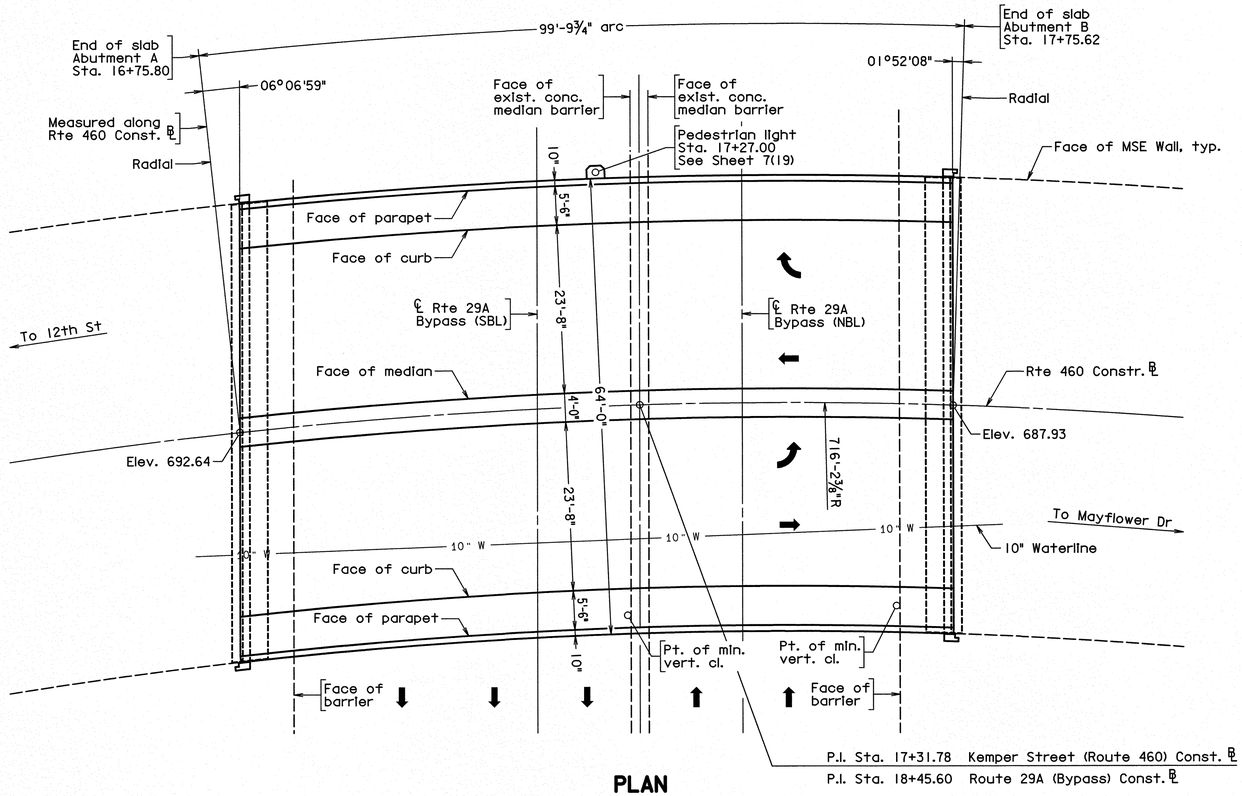

PLAN
Scale: 1" = 10'-0"

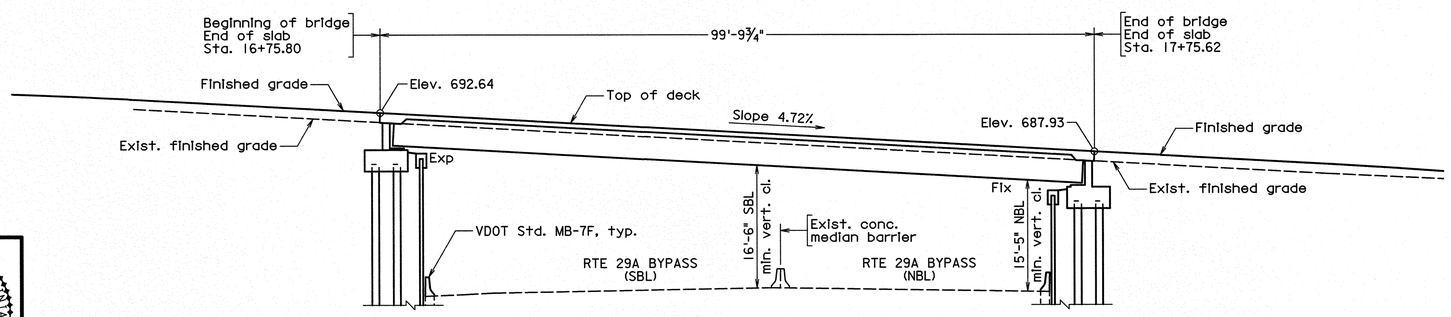

ABUTMENT A **ABUTMENT B**

DEVELOPED SECTION ALONG CONSTR. ℄
Scale: 1" = 10'-0"

GENERAL NOTES:

Widths: 5'-6" sidewalk, 23'-8" roadway, 4'-0" median, 23'-8" roadway, 5'-6" sidewalk
62'-4" face-to-face of parapets
64'-0" out to out deck width.

Span layout: 95'-1" prestressed concrete 45" bulb-T beam span

Capacity: HL-93 loading.

Specifications:

Construction: Virginia Department of Transportation Road and Bridge Specifications, 2007.

Design: AASHTO LRFD Bridge Design Specifications, 6th Edition, 2012; 2013 Interim Specifications; and VDOT Modifications.

Standards: Virginia Department of Transportation Road and Bridge Standards, 2008.

These plans are incomplete unless accompanied by the Supplemental Specifications and Special Provisions included in the contract documents.

This project is to be constructed in accordance with the Virginia Department of Transportation Work Area Protection Manual, June 2011 and latest revisions.

Design loading includes 20 psf allowance for construction tolerances and construction methods. Design loading includes 15 psf allowance for future wearing surface.

The use of prestressed deck panels as stay-in-place forms will not be permitted.

All structural steel, including bearings, shall be galvanized ASTM A36.

Low permeability concrete shall be used in this project.

Concrete in the superstructure including parapets, sidewalks and terminal walls shall be Class A4; in abutments, Class A3.

Prestressed concrete in beams shall be Class A5 having a minimum compressive cylinder strength at 28 days equal to 8,000 psi and a minimum compressive cylinder strength at time of release of strands equal to 7,000 psi.

All reinforcing steel shall be deformed and shall conform to ASTM A615, Grade 60 except for reinforcing steels noted as CRR (corrosion resistant reinforcing) which shall conform to applicable specifications noted in the special provision. All reinforcing bar dimensions on the detailed drawings are to centers of bars except where otherwise noted and are subject to fabrication and construction tolerances.

Corrosion resistant reinforcing (CRR) steels shall conform to one or more of the three Classes listed in the special provision. The minimum yield strength shall be: 100 ksi for low carbon/chromium and 60 ksi for stainless clad or solid stainless steel. The Class(es) of CRR steel(s) required on this project is/are noted on plan sheets and in the reinforcing steel schedule. Corrosion Resistant Reinforcing Steel, Class II or Class III, may be substituted for Class I. Corrosion Resistant Reinforcing Steel, Class III, may be substituted for Class II.

Prestressing strands shall be uncoated, seven-wire, low-relaxation steel strands conforming to ASTM A416 Grade 270.

H-Piles (HP 10x42) in footings for Abutments A & B have a design capacity of 30 tons per pile.

Prior to pile driving operations, the Contractor shall prebore for a 10" steel pile at each pile location to ensure location and plumbness of each pile. Preboring operations shall be in accordance with the requirements of Section 403. The bored holes shall be a depth of 10'-0". After setting the pile in the drilled hole, the pile shall be driven to refusal and the area around the pile shall be filled with flowable backfill. All cost associated with the preboring operations and filling the void with flowable backfill shall be included in the unit price for preboring 10" steel pile.

All piles shall be in place prior to construcion of the MSE retaining structure.

Bridge No. of existing bridge is 1851. Plan No. is 165-16.

The entire existing bridge, including the slope protection is to be dismantled and removed from the site in a safe and legal manner. The Contractor should note that portions of the existing bridge are constructed using asbestos and/or lead containing materials. A copy of the hazardous materials report prepared by F&R is included in the specification. The cost for dismantling and removing the existing structure shall be included in the price bid for Dismantle and Remove Exist. Structure (Str. No. 1851.) The cost shall include all labor, materials and equipment necessary to perform the work, including design and construction of a debris collection system to prevent debris from falling onto roadway below bridge and removal and disposal of asbestos and/or lead materials.

COMMONWEALTH OF VIRGINIA
7/29/14
CHAD M. THOMAS
Lic. No. 036962
PROFESSIONAL ENGINEER

MATTERN & CRAIG
ROANOKE, VA
STRUCTURAL ENGINEER

PLANS BY:	Mattern & Craig
COORDINATED:	Steven A. Campbell
SUPERVISED:	Steven R. Alvis
DESIGNED:	M.L. Fizzano/P.F. Cardwell
DRAWN:	Darren K. Allen
CHECKED:	Chad M. Thomas

Mattern & Craig
CONSULTING ENGINEERS • SURVEYORS
701 FIRST STREET S.W.
ROANOKE, VIRGINIA 24016
(540) 345-9342
FAX (540) 345-7691

No.	Description	Date

REVISIONS

For Table of Revisions, see Sheet 2.

CITY OF LYNCHBURG, VIRGINIA

PROPOSED BRIDGE REPLACEMENT FOR KEMPER STREET (RTE. 460) OVER LYNCHBURG EXPRESSWAY (RTE. 29A) 0.1 MI. S.E. OF INT. 16th STREET

PLAN NO. 1851BR

Date: July 31, 2014

STATE	FEDERAL AID ROUTE	FEDERAL AID PROJECT	STATE ROUTE	STATE PROJECT	SHEET NO.
VA.	—	—	29	U000-118-204, C-501, B-601	7(3)

ESTIMATED QUANTITIES - SUBSTRUCTURE ONLY

		Concrete Class A3 CY **	Corrosion Resistant Reinforcing Steel Class I LB	Steel Piles 10" LF	Pile Point For 10" Steel Pile EA	Dynamic Pile Test (End Bearing Piles) EA	Preboring 10" Steel Pile LF
Abutment A	Neat	9.6	620	—	—	—	—
	Footing	36.3	3,430	877	26	1	260
Abutment B	Neat	9.6	620	—	—	—	—
	Footing	36.1	3,410	713	26	1	260
Total		91.6	8,080	1590	52	2	520

** Low permeability concrete shall be used for the construction of this structure.

⊗ Denotes items to be paid for on the basis of plan quantities in accordance with current Road and Bridge Specifications.

ESTIMATED QUANTITIES - SUPERSTRUCTURE ONLY

Item		Units	Quantity
Concrete Class A4	**	CY	239.6
Corrosion Resistant Reinf. Steel, Class I	⊗	LB	44,230
Bridge railing	★ ⊗	LF	200
Prestressed Concrete Beam, Bulb-T, 45" depth, +90'-100'	⊗	EA	9
Bridge-Deck Grooving	⊗	SY	570
Concrete Substructure Surface Repair (Bridge 8000, Campbell Ave. over Rte. 29)		SY	5

** Low permeability concrete shall be used for the construction of this structure.

⊗ Denotes items to be paid for on the basis of plan quantities in accordance with current Road and Bridge Specifications.

★ Only includes portion of railing on the bridge from abutment to abutment. Portion of railing off of the bridge shall be included in the bid price for MSE Retaining Structure.

LUMP SUM BID ITEMS

Mobilization	LS
Construction Surveying	LS
Dismantle and Remove Existing Structure Number (Str. No. 1851)	LS
Waterline system	LS
MSE Retaining Structure	LS

GENERAL NOTES (CONT'D):

B.M.: Metal VDOT disk set in concrete and stamped 118-0039, located approx. 128 ft north of existing bridge in median between ramps.

The backwall at each abutment shall be waterproofed in accordance with the requirements of Sec. 405 and Sec. 416.

The existing waterline shall be relocated as noted on Sheet 7(20).

The waterline and pipe supports on the existing structure are designated as Type B structure elements in accordance with Section 411 of the Specifications.

The project includes concrete substructure surface repairs for the adjacent bridge No. 8000, Campbell Ave. over Route 29 Expressway, in areas of the abutments as directed by the Engineer.
Pay Item: Concrete Substructure Surface Repairs
Quantity: 5 SY

The location of utilities, including underground utilities, is indicated on the drawings insofar as their existence and location were known at the time of preparation of the drawings. However, nothing in these contract documents shall be construed as a guarantee that such utilities are in the location indicated or that they actually exist, or that other utilities are not within the area of operations.

The Contractor shall make necessary investigations to determine the existence and locations of such utilities. The Contractor shall pay for any damage to and for maintenance of protection of existing utilities and structures including water services, sewer laterals, telephone, power, and fiber optic lines.

Before the work is started, the Contractor shall notify all companies, corporations, municipalities, and individuals who own utilities on the construction site, in the right-of-way or immediately adjacent to the construction area if those utilities may be affected by the work. The Contractor shall arrange to have the various utilities located and to have them removed or relocated as required, or to determine the method of protection acceptable to the respective owner, if the method of protection is not specified hereinafter. Any cost incurred with removing, relocating or protecting utilities shall be borne by the Contractor unless indicated otherwise. The Contractor shall work with and assist the city (or utility owner) by coordinating all utility relocation operations.

All utilities which are damaged or misaligned shall be repaired or replaced by the respective utility company(s) and/or the City of Lynchburg at the expense of the Contractor.

The Contractor shall coordinate all work within the vicinity of existing utilities (water, gas, etc.) with the respective utility company. All coordination of utility service is the responsibility of the Contractor. The work shall be conducted in accordance with the rules and regulations of the respective utility company. Temporary bracing or supports shall be installed as needed to sufficiently support and/or protect utility lines, etc. during construction, and any damage to the utilities/conduits shall be repaired at the contractor's expense. All methods for supporting and maintaining the existing utilities shall be subject to the approval of the respective utility company and the owner. Any utilities removed as part of the work, and not indicated to be removed or abandoned, shall be restored using materials and installation equal to the utility's and/or the City of Lynchburg standards.

MSE WALL NOTES:

The minimum design life of the MSE wall shall be 100-year.

The maximum allowable foundation bearing pressure shall be as follows: 2 tons/sq. ft below elevation 685 at Abutment A, and 670 at Abutment B, 1.5 tons/sq. ft above these elevations

The anticipated MSE wall total settlement is ½ inch and differential settlement is 1 inch.

The entire area of mechanically stabilized earth mass behind the MSE wall for the full width of the roadway shall be backfilled with select backfill material specified by the MSE wall manufacturer. The existing slopes to be backfilled shall be bench cut every 2 feet in elevation change, prior to placing backfill. The cost of all materials, labor, and equipment for excavation and select backfill in this area shall be included in the price bid for the MSE Retaining Structure.

The lateral limits of excavation are dependent on the depth at a particular location below the wall. Additional localized excavation may be required depending on the site conditions at the time of construction as determined by the Geotechnical Engineer in the field.

An impervious membrane shall be placed below the pavement and just above the first row of reinforcement to intercept any flows containing deicing chemicals. The membrane shall be sloped to drain away from the facing to an intercepting longitudinal drain outletted beyond the reinforced zone. The cost of the impervious membrane shall be included in the price bid for the MSE Retaining Structure.

A geotextile shall be used as a separator between the mechanically stabilized earth mass and the subbase.

Corrosion resistant reinforcing steel shall be used in copings facing panels, and moment slabs.

For additional details of the steel railing, refer to sheets 7(17) and 7(18).

Coping, Railing, Moment slab, and Paving shall not be placed until until a minimum of 30 days after wall completion have elapsed.

The selected wall supplier will submit a detailed design including calculations and shop drawings for approval. A complete reinforcing steel schedule shall be included in the shop drawings. This submittal shall be sealed by a professional engineer registered in the Commonwealth of Virginia.

Provide drainage details such as perforated pipe underdrain and/or drainage blanket based upon field conditions.

All panel types and other related elements shall be detailed on shop drawings.

Contractor shall coordinate MSE wall details at connection to bridge with bridge plans.

See Special Provision for Mechanically Stabilized Earth walls.

The bid price for the MSE Retaining Structure shall include all labor, materials, and equipment necessary to design, fabricate, transport, and construct the walls per the project documents and per the design provided by the MSE wall manufacturer. The bid price for this item shall include excavation, foundation preparation, select backfill material, geotextile, impervious membrane, reinforcing steel, drainage materials, and all other incidentals associated with and required for construction of the MSE wall.

The cost of the preformed joint filler and stone behind barrier (VDOT Std MB-7F) shall be included in the price bid for VDOT Std MB-7F.

The design of the MSE wall shall include the design of the moment slab, coping, and railing system off of the bridge. See Sheet 7(17) for details. The cost of the moment slab, coping, and railing system off of the bridge shall be included in the bid price for MSE Retaining Structure.

The cost of the concrete sidewalk above the moment slab and shall be included in the price bid for the hydraulic cement concrete sidewalk, 4".

Prior to wall construction, the foundation shall be compacted with a smooth wheel vibratory roller. The drums of the roller shall be ballasted and each pass of the roller shall overlap one half the width of the previous pass. The roller shall make at least ten passes over the proposed wall foundation zone. No density test will be required. Any Foundation soils found to be unsuitable shall be removed and replaced with select material Type I minimum CBR of 30.

Minimum panel design thickness is 5½ inches. Thickness of concrete must increase to accommodate any architectural surface finish that may be specified.

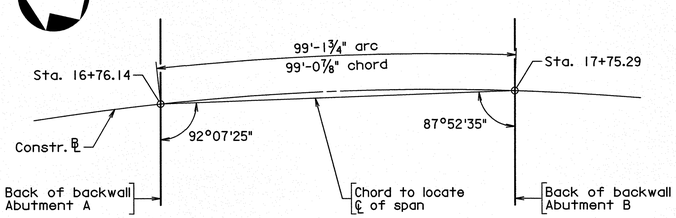

BRIDGE LAYOUT
Scale: 1" = 20'

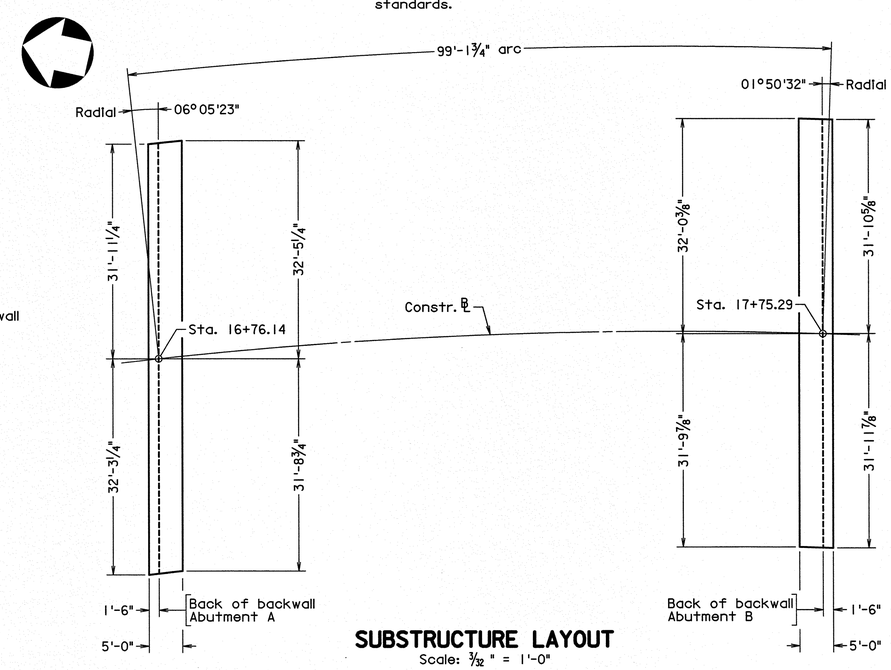

SUBSTRUCTURE LAYOUT
Scale: 3/32" = 1'-0"

Mattern & Craig
CONSULTING ENGINEERS • SURVEYORS
701 FIRST STREET S.W.
ROANOKE, VIRGINIA 24016
(540) 345-9342
FAX (540) 345-7691

COMMONWEALTH OF VIRGINIA
7/29/14
CHAD M. THOMAS
Lic. No. 036962
PROFESSIONAL ENGINEER

MATTERN & CRAIG
ROANOKE, VA
STRUCTURAL ENGINEER

No.	Description	Date
	Revisions	

BRIDGE REPLACEMENT
KEMPER STREET OVER LYNCHBURG EXPRESSWAY

CITY OF LYNCHBURG, VIRGINIA

ESTIMATED QUANTITIES
BRIDGE LAYOUT
SUBSTRUCTURE LAYOUT

Designed: MLF	Date	Plan No.	Sheet No.
Drawn: DKG	July 2014	1851BR	3 of 25
Checked: CMT			

STATE	FEDERAL AID ROUTE	FEDERAL AID PROJECT	STATE ROUTE	STATE PROJECT	SHEET NO.
VA.	—	—	29	U000-118-204, C-501, B-601	7(4)

Notes:

1. For details of the deck extension, see Sheet 7(10).
2. For waterline details, see Sheet 7(20).

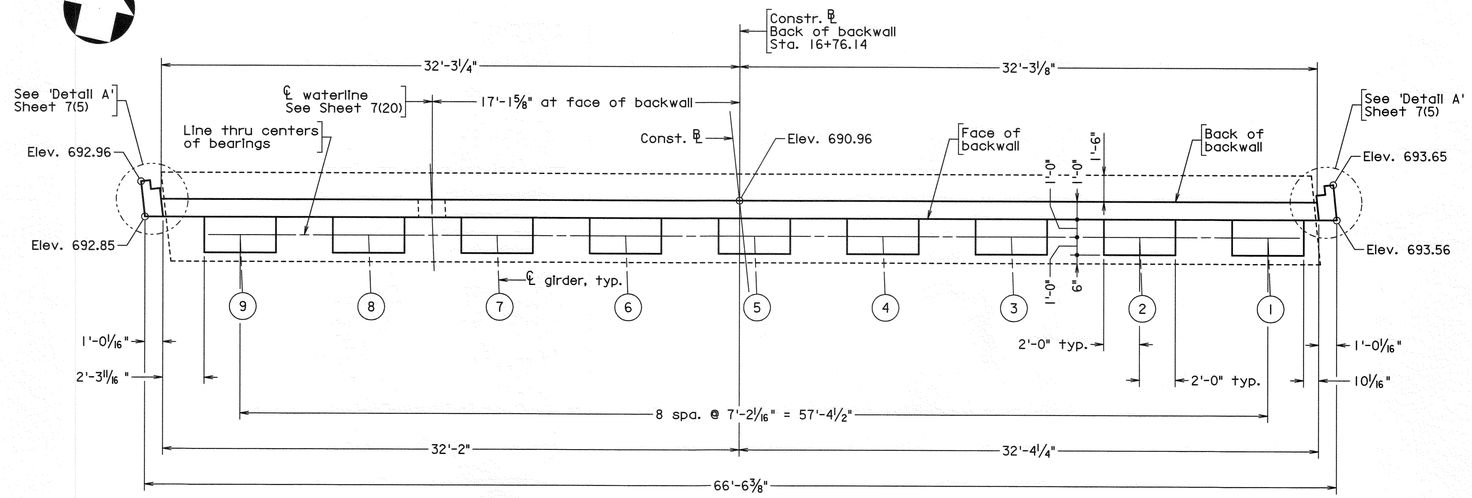

PLAN

Scale: ¼" = 1'-0"

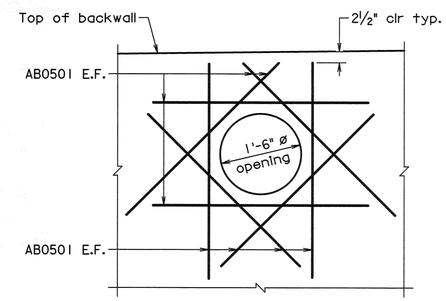

PIPE PENETRATION DETAIL

Not to scale
(Wall reinf. not shown for clarity)

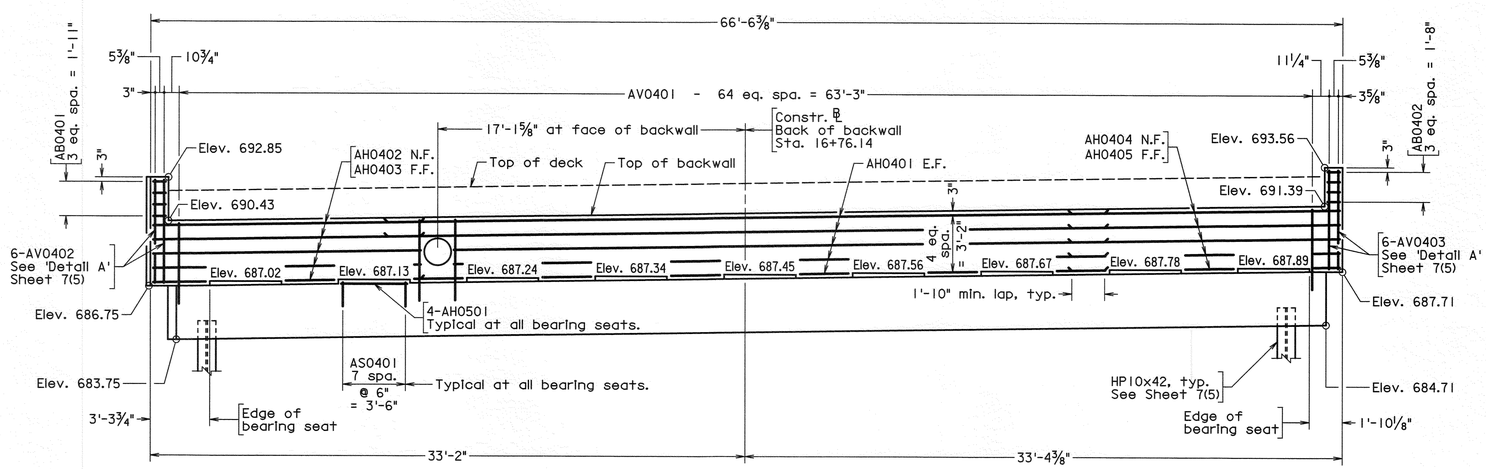

ELEVATION

Scale: ¼" = 1'-0"

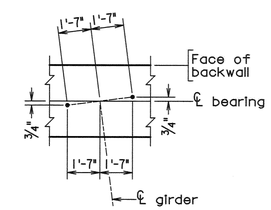

ANCHOR BOLT LAYOUT

Not to scale

Mattern & Craig
CONSULTING ENGINEERS • SURVEYORS
701 FIRST STREET S.W.
ROANOKE, VIRGINIA 24016
(540) 345-9342
FAX (540) 345-7691

COMMONWEALTH OF VIRGINIA
7/29/14
CHAD M. THOMAS
Lic. No. 036962
PROFESSIONAL ENGINEER

MATTERN & CRAIG
ROANOKE, VA
STRUCTURAL ENGINEER

No.	Description	Date
	Revisions	

BRIDGE REPLACEMENT
KEMPER STREET OVER LYNCHBURG EXPRESSWAY

CITY OF LYNCHBURG, VIRGINIA

ABUTMENT A
PLAN & ELEVATION

Designed: MLF
Drawn: DKA
Checked: CMT

Date	Plan No.	Sheet No.
July 2014	1851BR	4 of 25

STATE	FEDERAL AID ROUTE	FEDERAL AID PROJECT	STATE ROUTE	STATE PROJECT	SHEET NO.
VA.	—	—	29	U000-118-204, C-501, B-601	7(5)

Notes:

The rub plates shall be centered horizontally on the wing haunch and centered vertically on the deck extension.

Cost of the rub plates and joint filler shall be included in the price bid for Concrete Class A3.

For details of the deck extension, see Sheet 7(10).

The ½" expanded rubber joint filler shall extend the full length of the deck slab extension.

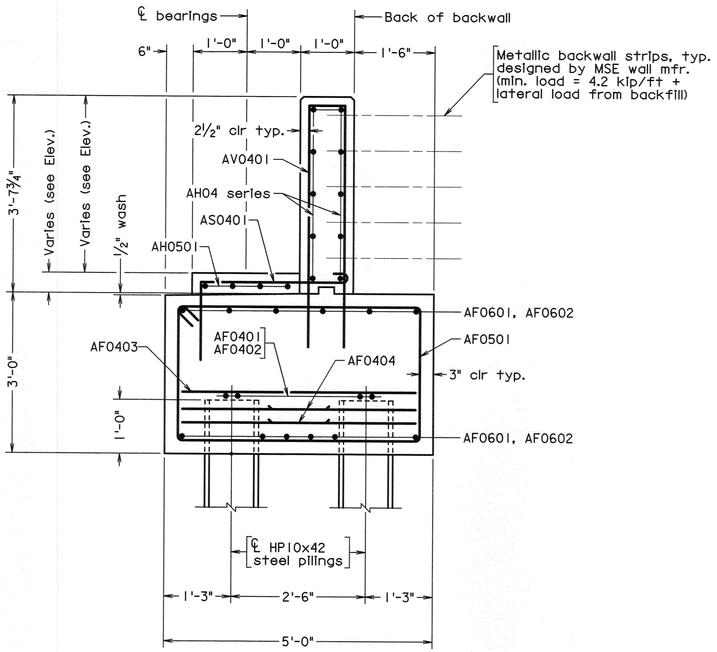

TYP. ABUTMENT SECTION

Scale: ¾" = 1'-0"

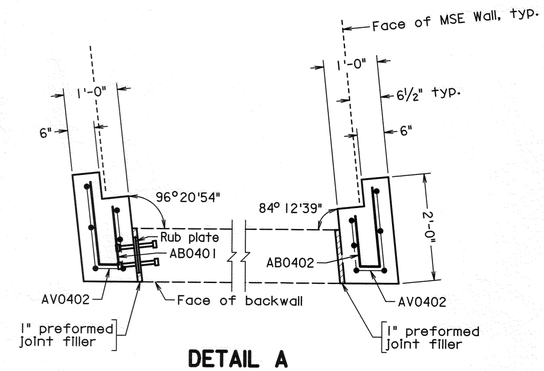

DETAIL A

Not to scale

Note: For details of rub plates see Rub Plate Detail

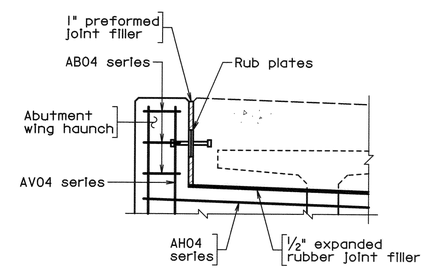

PART TRANSVERSE SECTION

Scale: ¾" = 1'-0"

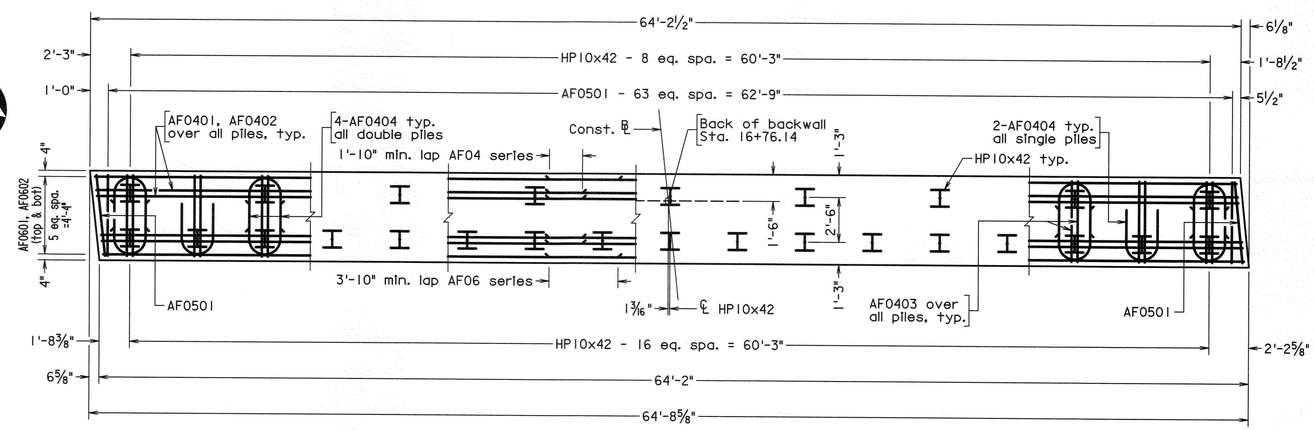

FOOTING PLAN

Scale: ¼" = 1'-0"

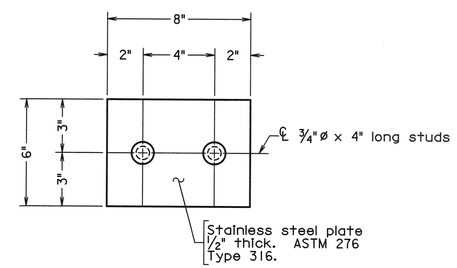

RUB PLATE DETAIL

Scale: 3" = 1'-0"

Mattern & Craig
CONSULTING ENGINEERS • SURVEYORS
701 FIRST STREET S.W.
ROANOKE, VIRGINIA 24016
(540) 345-9342
FAX (540) 345-7691

COMMONWEALTH OF VIRGINIA
7/29/14
CHAD M. THOMAS
Lic. No. 038962
PROFESSIONAL ENGINEER

MATTERN & CRAIG
ROANOKE, VA
STRUCTURAL ENGINEER

No.	Description	Date
	Revisions	

BRIDGE REPLACEMENT
KEMPER STREET OVER LYNCHBURG EXPRESSWAY

CITY OF LYNCHBURG, VIRGINIA

ABUTMENT A DETAILS & FOOTING PLAN

Designed: MLF	Date	Plan No.	Sheet No.
Drawn: DKA	July 2014	1851BR	5 of 25
Checked: CMT			

STATE	FEDERAL AID ROUTE	FEDERAL AID PROJECT	STATE ROUTE	STATE PROJECT	SHEET NO.
VA.	—	—	29	U000-118-204, C-501, B-601	7(6)

Notes:

1. For details of the deck extension, see Sheet 7(10).
2. For waterline details, see Sheet 7(20).

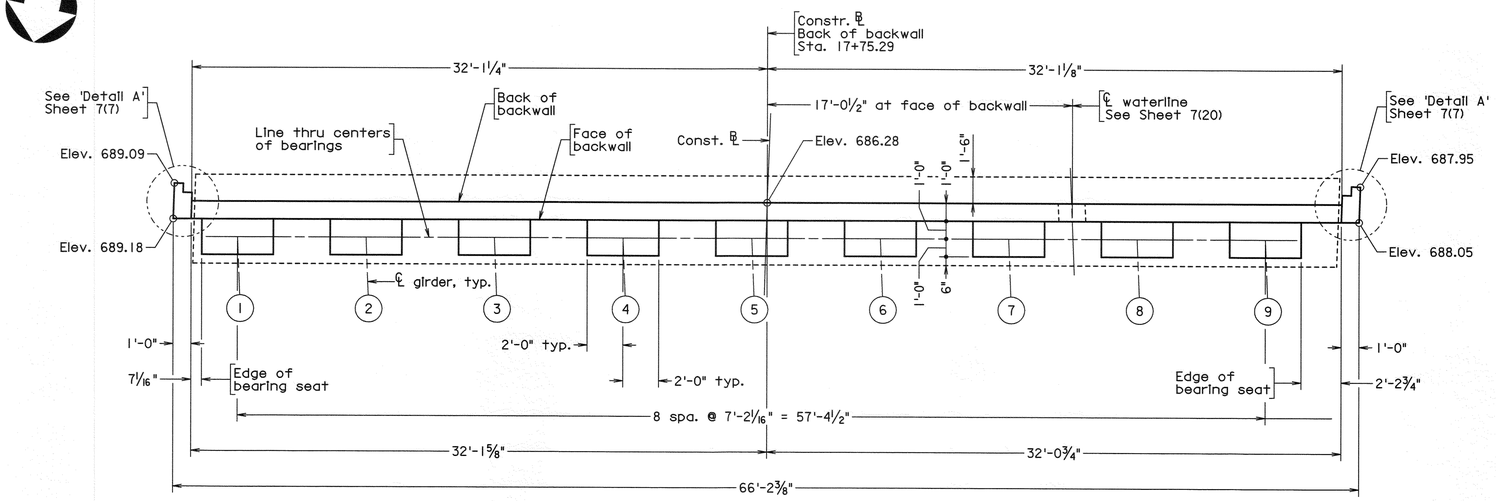

PLAN

Scale: ¼" = 1'-0"

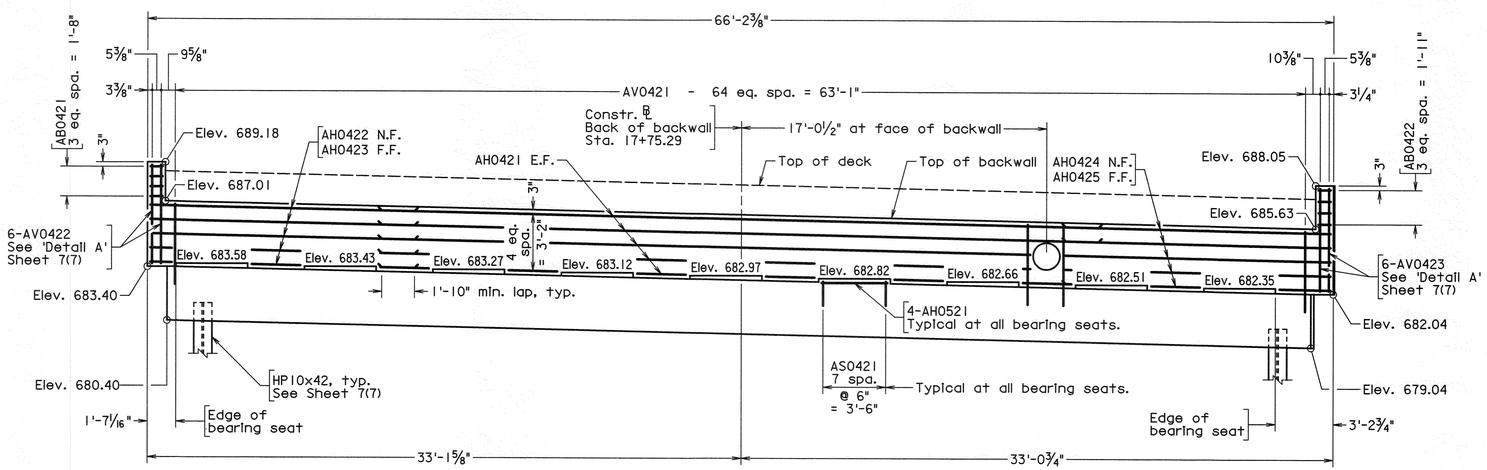

ELEVATION

Scale: ¼" = 1'-0"

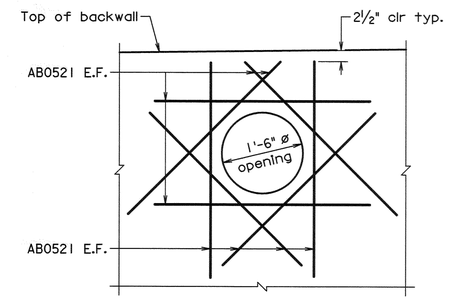

PIPE PENETRATION DETAIL

Not to scale
(Wall reinf. not shown for clarity)

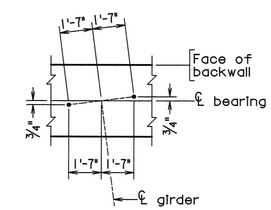

ANCHOR BOLT LAYOUT

Not to scale

Mattern & Craig
CONSULTING ENGINEERS • SURVEYORS
701 FIRST STREET S.W.
ROANOKE, VIRGINIA 24016
(540) 345-9342
FAX (540) 345-7691

COMMONWEALTH OF VIRGINIA
7/29/14
CHAD M. THOMAS
Lic. No. 036962
PROFESSIONAL ENGINEER

MATTERN & CRAIG
ROANOKE, VA
STRUCTURAL ENGINEER

No.	Description	Date
	Revisions	

BRIDGE REPLACEMENT
KEMPER STREET OVER LYNCHBURG EXPRESSWAY

CITY OF LYNCHBURG, VIRGINIA

ABUTMENT B PLAN & ELEVATION

Designed: MLF
Drawn: DKA
Checked: CMT

Date	Plan No.	Sheet No.
July 2014	1851BR	6 of 25

STATE	FEDERAL AID ROUTE	FEDERAL AID PROJECT	STATE ROUTE	STATE PROJECT	SHEET NO.
VA.	—	—	29	U000-118-204, C-501, B-601	7(7)

Notes:

The rub plates shall be centered horizontally on the wing haunch and centered vertically on the deck extension.

Cost of the rub plates and joint filler shall be included in the price bid for Concrete Class A3.

For details of the deck extension, see Sheet 7(10).

The ½" expanded rubber joint filler shall extend the full length of the deck slab extension.

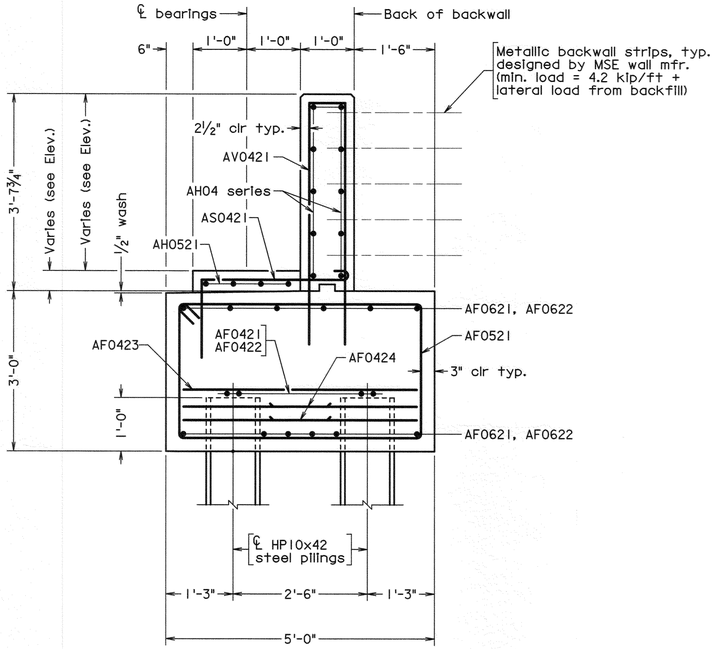

TYP. ABUTMENT SECTION

Scale: ¾" = 1'-0"

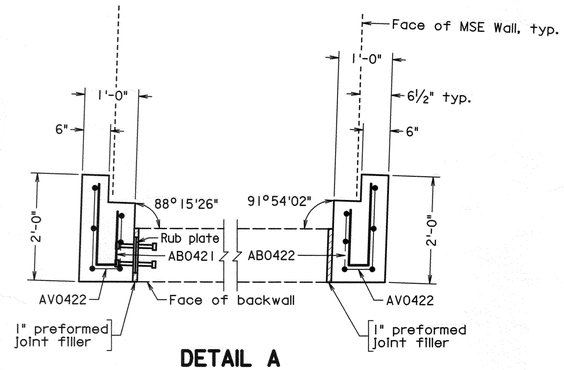

DETAIL A

Not to scale

Note: For details of rub plates see Rub Plate Detail

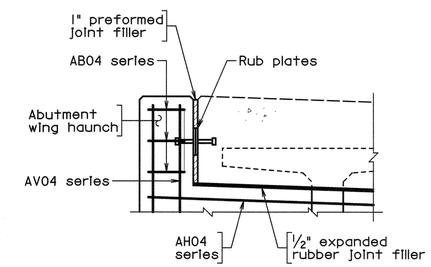

PART TRANSVERSE SECTION

Scale: ¾" = 1'-0"

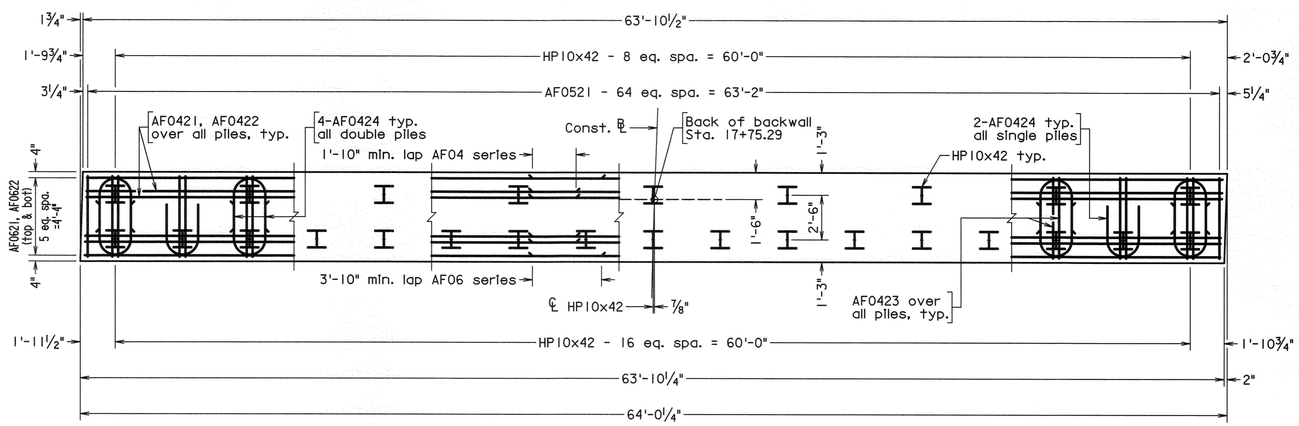

FOOTING PLAN

Scale: ¼" = 1'-0"

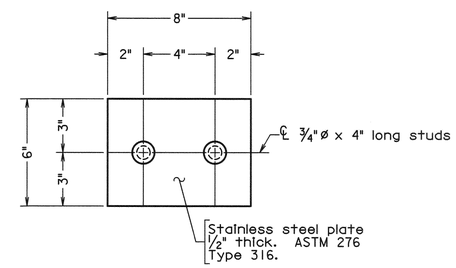

RUB PLATE DETAIL

Scale: 3" = 1'-0"

Mattern & Craig
CONSULTING ENGINEERS • SURVEYORS
701 FIRST STREET S.W.
ROANOKE, VIRGINIA 24016
(540) 345-9342
FAX (540) 345-7691

COMMONWEALTH OF VIRGINIA
7/29/14
CHAD M. THOMAS
Lic. No. 036962
PROFESSIONAL ENGINEER

MATTERN & CRAIG
ROANOKE, VA
STRUCTURAL ENGINEER

No.	Description	Date
	Revisions	

BRIDGE REPLACEMENT
KEMPER STREET OVER LYNCHBURG EXPRESSWAY

CITY OF LYNCHBURG, VIRGINIA

ABUTMENT B DETAILS & FOOTING PLAN

Designed: MLF	Date	Plan No.	Sheet No.
Drawn: DKA	July 2014	1851BR	7 of 25
Checked: CMT			

STATE	FEDERAL AID ROUTE	FEDERAL AID PROJECT	STATE ROUTE	STATE PROJECT	SHEET NO.
VA.	—	—	29	U000-118-204, C-501, B-601	7(8)

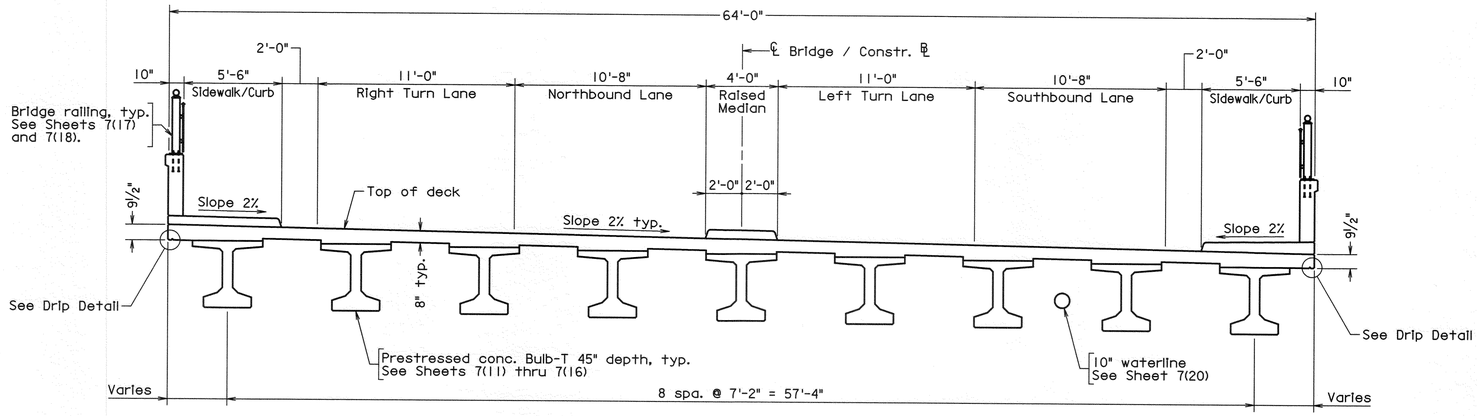

TRANSVERSE SECTION

Scale: 1/4" = 1'-0"

NOTES:

1. See Plan on Sheet 7(2) and on Roadway plans for median geometrics.
2. For waterline details, see Sheet 7(20).
3. For deck plan, elevations, and deck extension details, see Sheets 7(9) and 7(10).

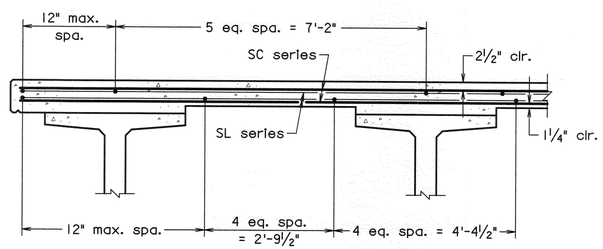

PART SECTION

Not to scale

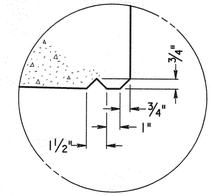

DRIP DETAIL

Not to scale

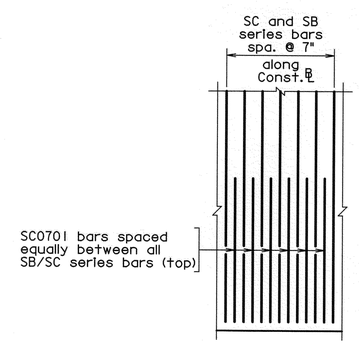

DECK OVERHANG PLAN

Not to scale

(SL series bars not shown for clarity)

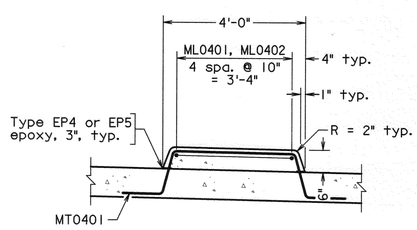

MEDIAN SECTION

Not to scale

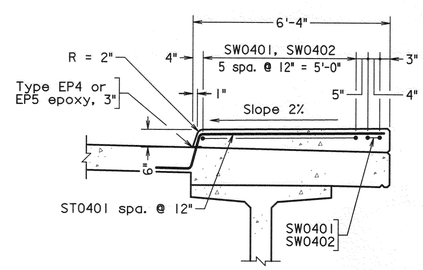

SIDEWALK SECTION

Not to scale

Railing not shown for clarity. Similar at high end of deck.

Mattern & Craig
CONSULTING ENGINEERS • SURVEYORS
701 FIRST STREET S.W.
ROANOKE, VIRGINIA 24016
(540) 345-9342
FAX (540) 345-7691

COMMONWEALTH OF VIRGINIA
7/29/14
CHAD M. THOMAS
Lic. No. 036962
PROFESSIONAL ENGINEER

MATTERN & CRAIG
ROANOKE, VA
STRUCTURAL ENGINEER

No.	Description	Date
	Revisions	

BRIDGE REPLACEMENT
KEMPER STREET OVER LYNCHBURG EXPRESSWAY

CITY OF LYNCHBURG, VIRGINIA

TRANSVERSE SECTION

Designed: MLF
Drawn: DKA
Checked: CMT

Date	Plan No.	Sheet No.
July 2014	1851BR	8 of 25

STATE	FEDERAL AID ROUTE	FEDERAL AID PROJECT	STATE ROUTE	STATE PROJECT	SHEET NO.
VA.	—	—	29	U000-118-204, C-501, B-601	7(9)

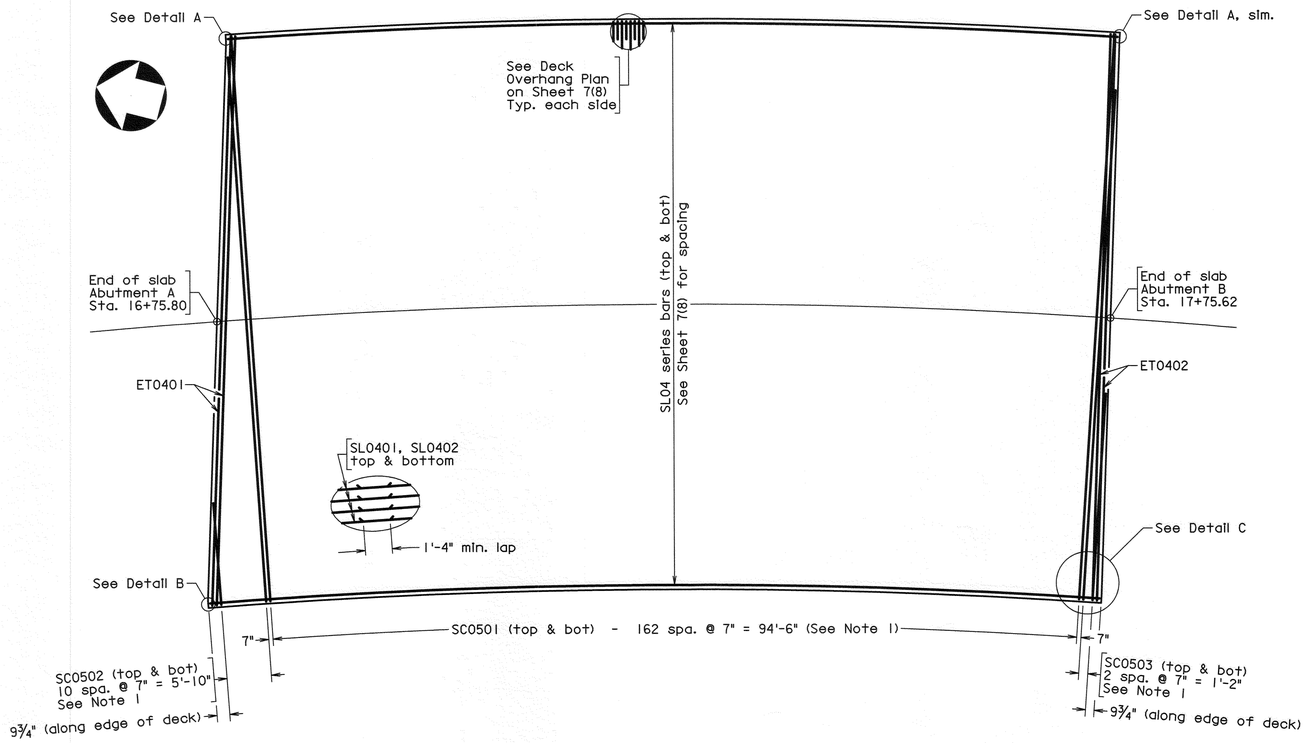

DECK SLAB PLAN

Scale: 1/8" = 1'-0"

Notes:

1. Spacing for the SC series bars are given along the construction baseline unless otherwise noted.
2. For spacing of the SL series bars, see Sheet 7(8).
3. For deck extension details, see Sheet 7(10).

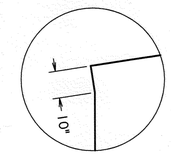

DETAIL A

Not to scale

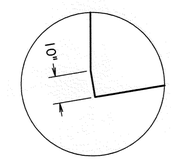

DETAIL B

Not to scale

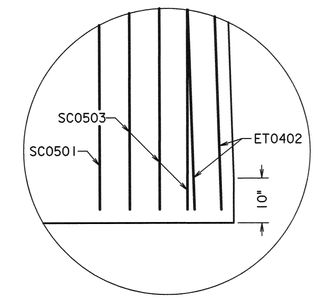

DETAIL C

Not to scale

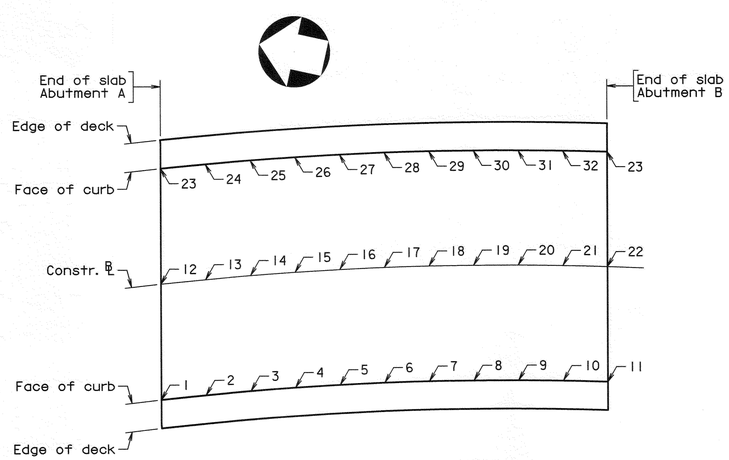

DECK ELEVATIONS PLAN

Not to scale

DECK ELEVATIONS

Point	Station	Elevation	Point	Station	Elevation	Point	Station	Elevation
1	16+72.95	692.26	12	16+75.80	692.64	23	16+78.45	693.03
2	16+83.30	691.77	13	16+85.78	692.17	24	16+88.09	692.58
3	16+93.66	691.28	14	16+95.76	691.70	25	16+97.72	692.12
4	17+04.01	690.79	15	17+05.75	691.23	26	17+07.36	691.67
5	17+14.37	690.31	16	17+15.73	690.76	27	17+16.99	691.21
6	17+24.72	689.82	17	17+25.71	690.28	28	17+26.63	690.76
7	17+35.07	689.33	18	17+35.69	689.81	29	17+36.27	690.30
8	17+45.43	688.84	19	17+45.67	689.34	30	17+45.90	689.85
9	17+55.78	688.35	20	17+55.66	688.87	31	17+55.54	689.39
10	17+66.14	687.86	21	17+65.64	688.40	32	17+65.17	688.94
11	17+76.49	687.37	22	17+75.62	687.93	33	17+74.81	688.49

Mattern & Craig
CONSULTING ENGINEERS • SURVEYORS
701 FIRST STREET S.W.
ROANOKE, VIRGINIA 24016
(540) 345-9342
FAX (540) 345-7691

COMMONWEALTH OF VIRGINIA
7/29/14
CHAD M. THOMAS
Lic. No. 036962
PROFESSIONAL ENGINEER

MATTERN & CRAIG
ROANOKE, VA
STRUCTURAL ENGINEER

No.	Description	Date

Revisions

BRIDGE REPLACEMENT
KEMPER STREET OVER LYNCHBURG EXPRESSWAY

CITY OF LYNCHBURG, VIRGINIA

DECK PLAN AND ELEVATIONS

Designed: MLF
Drawn: DKA
Checked: CMT

Date	Plan No.	Sheet No.
July 2014	1851BR	9 of 25

STATE	FEDERAL AID ROUTE	FEDERAL AID PROJECT	STATE ROUTE	STATE PROJECT	SHEET NO.
VA.	—	—	29	U000-118-204, C-501, B-601	7(10)

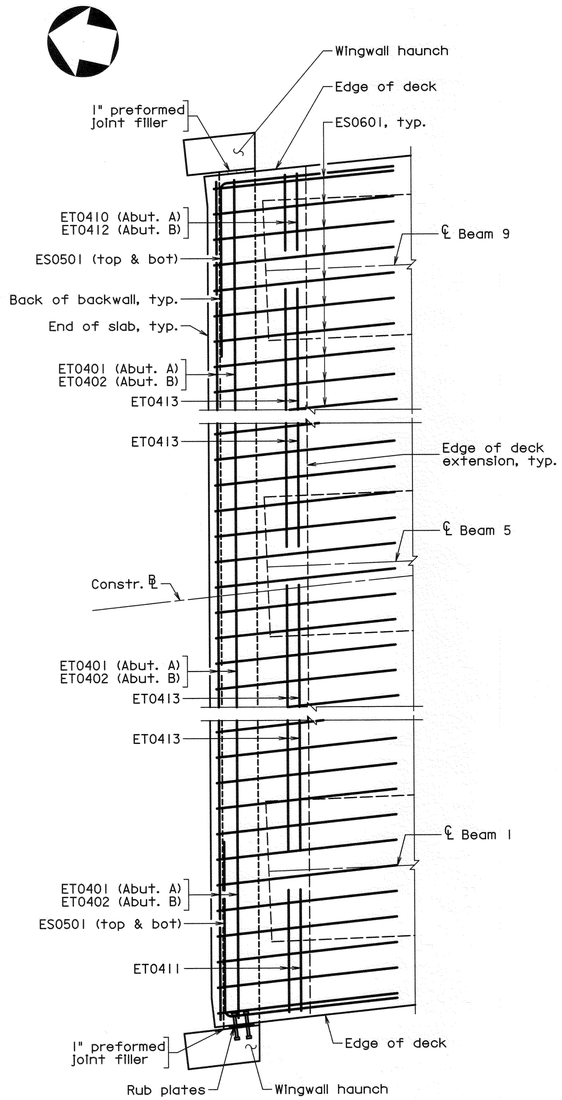

ABUTMENT A SLAB END PLAN

Scale: ½" = 1'-0"
(SC and SL series bars not shown for clarity)

Note:
Details shown above for corner reinforcement is typical for longitudinally opposite corners at Abutment B. Details shown above for rub plates is typical for diagonally opposite corners at Abument B.

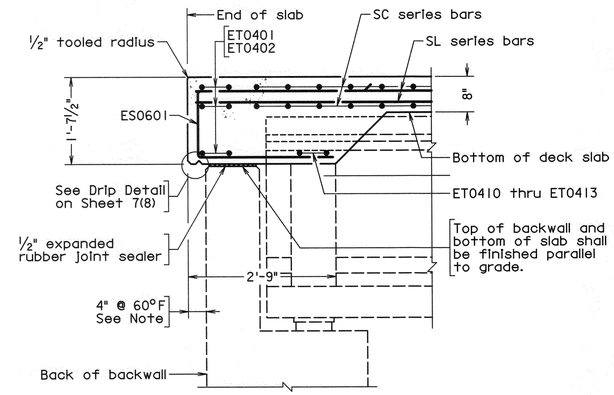

TYP. SLAB END DETAIL

Scale: ¾" = 1'-0"

Note:
Provide dimension as necessary to maintain 4" minimum at 60°F. Adjustments to dimension shall be varied by 3/32" for each 10°F variation from 60°F.

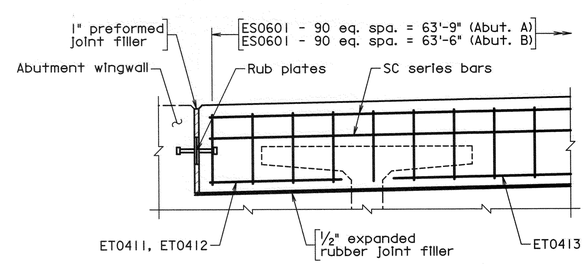

PART TRANSVERSE SECTION

Scale: ¾" = 1'-0"

Notes:

1. Slab end detail is perpendicular to end of slab.
2. ES0601 bars are parallel to Construction Baseline.
3. The ½" expanded rubber joint filler shall extend the full length of the deck slab extension.
4. For details of abutments, see Sheets 7(4) thru 7(7).
5. For details of rub plates, see Sheets 7(5) and 7(7).
6. For details of spacing for SL series bars, see Sheet 7(8).
7. For details of spacing for SC series bars, see Sheet 7(9).

Mattern & Craig
CONSULTING ENGINEERS • SURVEYORS
701 FIRST STREET S.W.
ROANOKE, VIRGINIA 24016
(540) 345-9342
FAX (540) 345-7691

COMMONWEALTH OF VIRGINIA
7/29/14
CHAD M. THOMAS
Lic. No. 036962
PROFESSIONAL ENGINEER

MATTERN & CRAIG
ROANOKE, VA
STRUCTURAL ENGINEER

No.	Description	Date
	Revisions	

BRIDGE REPLACEMENT
KEMPER STREET OVER LYNCHBURG EXPRESSWAY

CITY OF LYNCHBURG, VIRGINIA

DECK EXTENSION DETAILS

Designed: MLF	Date	Plan No.	Sheet No.
Drawn: DKA	July 2014	1851BR	10 of 25
Checked: CMT			

STATE	FEDERAL AID ROUTE	FEDERAL AID PROJECT	STATE ROUTE	STATE PROJECT	SHEET NO.
VA.	—	—	29	U000-118-204, C-501, B-601	7(11)

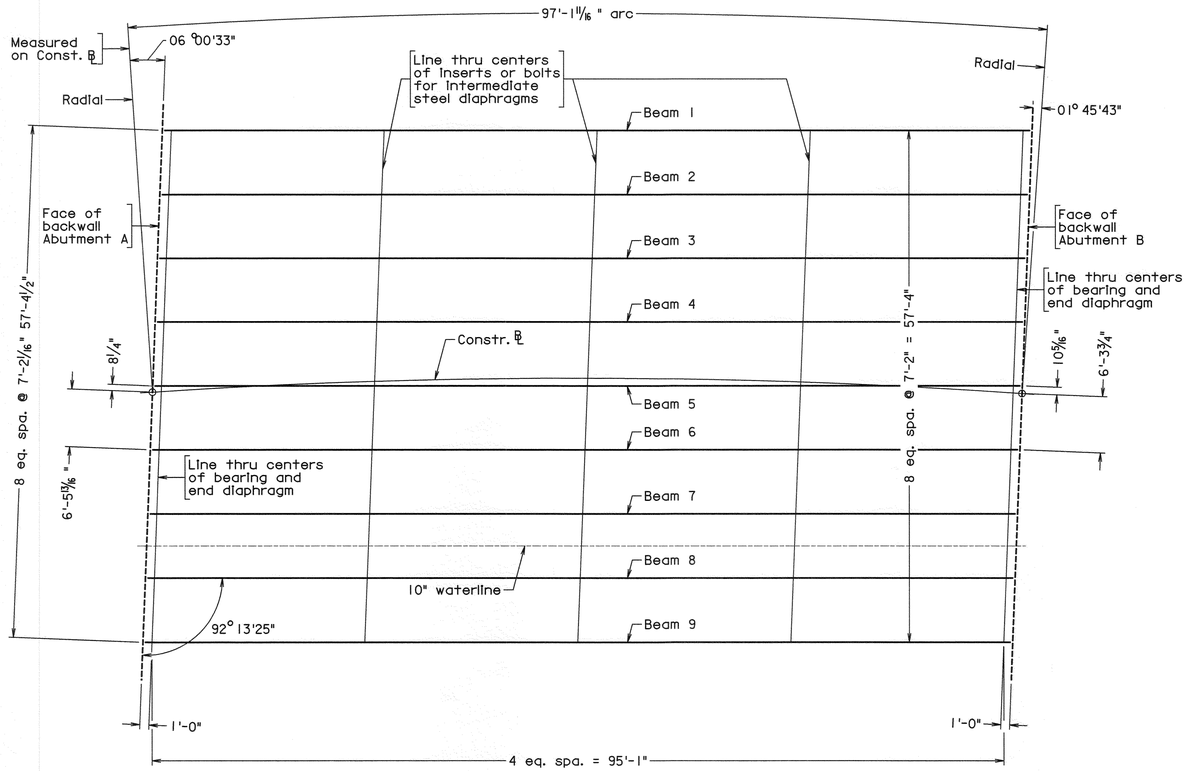

ERECTION DIAGRAM
Scale: 1/8" = 1'-0"

Notes:

1. For chord layout between substructures, see Sheet 7(3).
2. For prestressed concrete beam details, see Sheets 7(12) and 7(13).
3. For end diaphragm details, see Sheet 7(14).
4. For intermediate diphragm details, see Sheet 7(15).
5. For beam bearing details, see Sheet 7(16).
7. For waterline details, see Sheet 7(20).

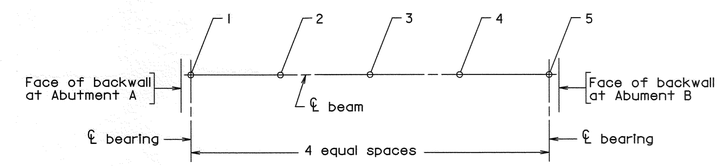

PLAN
Showing points of top of slab elevations

TOP OF SLAB ELEVATIONS ALONG ℄ BEAMS

Point	1	2	3	4	5
Beam 1	692.98	691.88	690.79	689.72	688.67
Beam 2	692.87	691.76	690.66	689.58	688.51
Beam 3	692.76	691.63	690.53	689.44	688.36
Beam 4	692.65	691.51	690.40	689.29	688.21
Beam 5	692.54	691.40	690.27	689.15	688.06
Beam 6	692.43	691.28	690.13	689.01	687.90
Beam 7	692.32	691.16	690.00	688.87	687.75
Beam 8	692.22	691.04	689.87	688.73	687.60
Beam 9	692.11	690.92	689.74	688.58	687.44

Mattern & Craig
CONSULTING ENGINEERS • SURVEYORS
701 FIRST STREET S.W.
ROANOKE, VIRGINIA 24016
(540) 345-9342
FAX (540) 345-7691

COMMONWEALTH OF VIRGINIA
7/29/14
CHAD M. THOMAS
Lic. No. 038962
PROFESSIONAL ENGINEER

MATTERN & CRAIG
ROANOKE, VA
STRUCTURAL ENGINEER

No.	Description	Date

Revisions

BRIDGE REPLACEMENT
KEMPER STREET OVER LYNCHBURG EXPRESSWAY

CITY OF LYNCHBURG, VIRGINIA

ERECTION DIAGRAM AND TOP OF SLAB ELEVATIONS

Designed: MLF	Date	Plan No.	Sheet No.
Drawn: DKA	July 2014	18511BR	11 of 25
Checked: CMT			

STATE	FEDERAL AID ROUTE	FEDERAL AID PROJECT	STATE ROUTE	STATE PROJECT	SHEET NO.
VA.	—	—	29	U000-118-204, C-501, B-601	7(12)

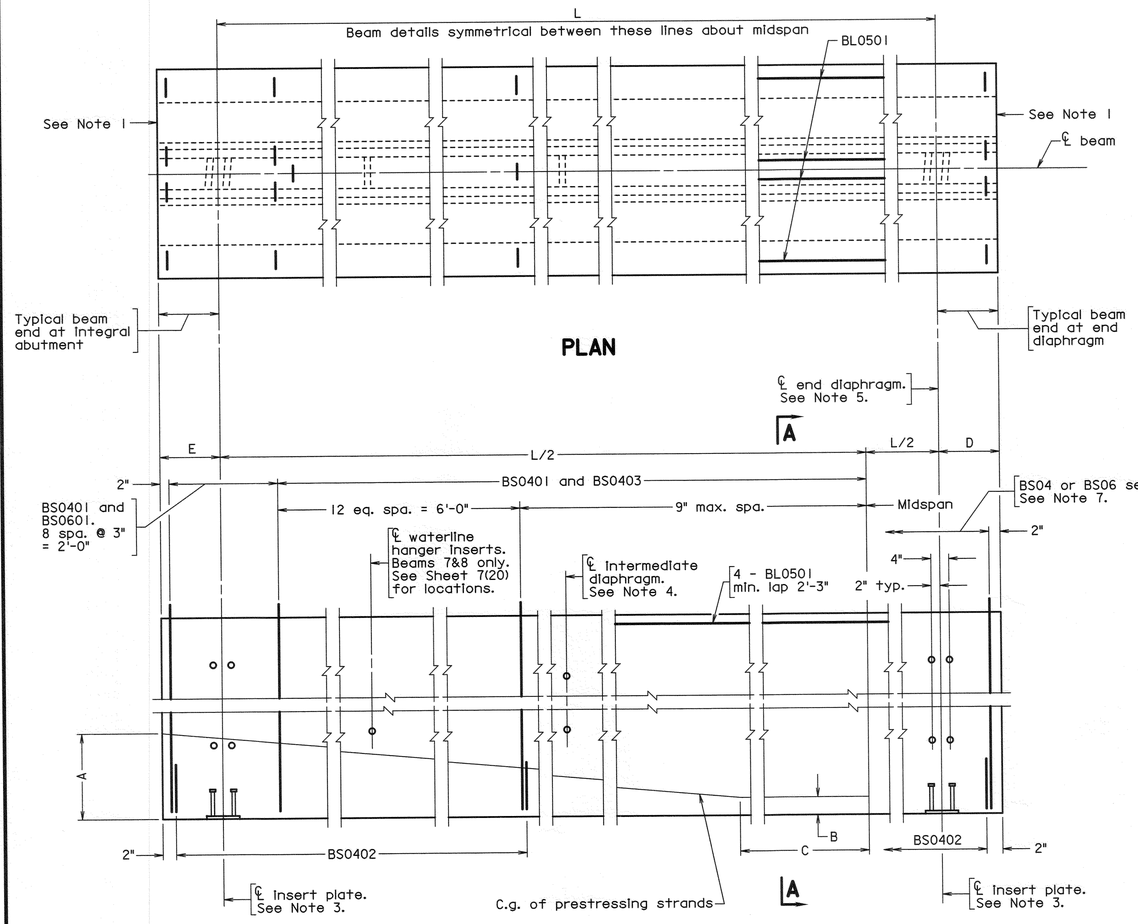

PLAN

SECTION ON CENTERLINE

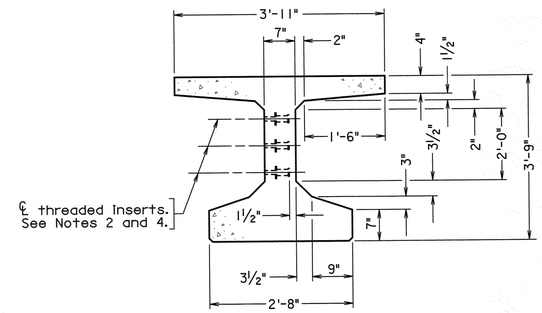

TYPICAL BEAM SECTION

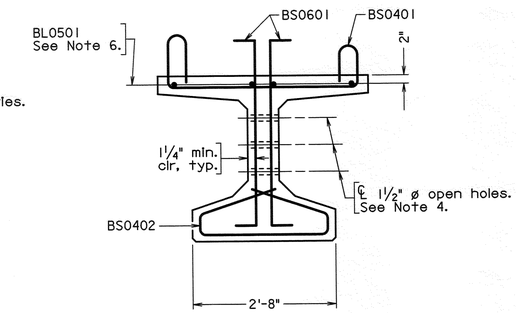

END VIEW

For dimensions not shown, see Typical Beam Section.

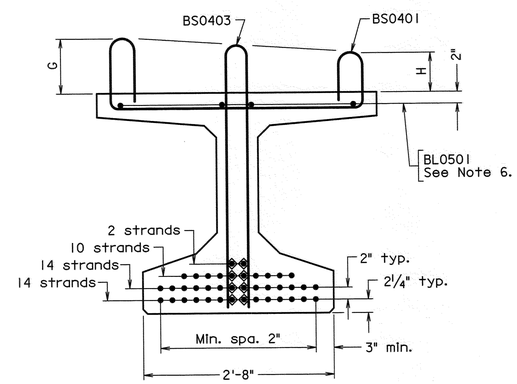

◇ Denotes harped strands

SECTION A-A

For dimensions not shown, see Typical Beam Section.
Scale: 1" = 1'-0"

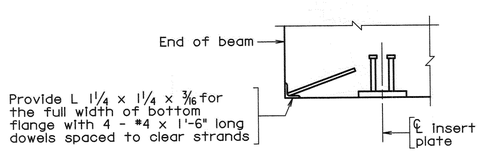

TYPICAL BOTTOM FLANGE EDGE DETAIL

Not to scale

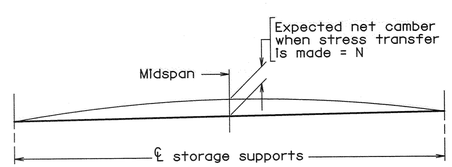

CAMBER DIAGRAM

Not to scale

Notes:

1. At beam ends use 1" deep recesses around local strand groups with 2" minimum edge clearances and fill with pneumatically applied mortar immediately after clipping strands. An approved epoxy mortar covering the ends of strands with a minimum thickness of 1/8" may be used as an alternate. Strands should be cool before mortar is applied. After mortar is allowed to cure, the entire end of beam shall be covered with epoxy type EP-3T.
2. Threaded inserts shall be provided at all exterior beams and at interior beams where line of diaphragms is discontinued at an interior beam. Threaded inserts shall be flared thin slab 7/8" - 9 NC threaded plain ferrule inserts having a minimum ultimate mechanical tensile strength of 8,000 pounds.
3. For details of insert plate, see Sheet 7(13).
4. 1½" ø open holes shall be formed with non-rigid tubing. For location of end and intermediate diaphagms, see Erection Diagram on sheet 7(11). For location and number of holes or inserts required for end and intermediate diaphragms, see Sheets 7(14) and 7(15).
5. The Contractor, after written approval from the Engineer, may use different prestressing strand arrangement provided that the total prestressing force and c.g. are the same as shown on the plans.
6. 4 - ½" ø strands stressed to 1,000 lbs. may be substituted for 4 - BL05 series bars.
7. For beam end reinforcing details, dead load deflection diagram, reinforcing steel schedule and miscellaneous details, see Sheets 7(13) thru 7(14).

DIMENSION TABLE

Beam	Prestr. force at Release lb. per strand	No. and size of strands / beam	Net Camber N in.	A ft.-in.	B in	C ft.-in.	D ft.-in.	E ft.-in.	G in.	H in.	L ft.-in.
1-9	43,943	40 - 0.6"ø	2¾	0-11	4¼	9-7⅞	0-8½	0-8½	6⅝	5⅞	95-1

Scale: ¾" = 1'-0" unless otherwise noted

COMMONWEALTH OF VIRGINIA
7/29/14
CHAD M. THOMAS
Lic. No. 036962
PROFESSIONAL ENGINEER

MATTERN & CRAIG
ROANOKE, VA
STRUCTURAL ENGINEER

No.	Description	Date

Revisions

BRIDGE REPLACEMENT
KEMPER STREET OVER LYNCHBURG EXPRESSWAY

CITY OF LYNCHBURG, VIRGINIA

PRESTRESSED CONCRETE BULB-T (PCBT-45)

Designed: MLF
Drawn: DKA
Checked: CMT

Date	Plan No.	Sheet No.
July 2014	1851BR	12 of 25

Mattern & Craig
CONSULTING ENGINEERS • SURVEYORS
701 FIRST STREET S.W.
ROANOKE, VIRGINIA 24016
(540) 345-9342
FAX (540) 345-7691

PCBT-45C (MOD.) 06-14-2010

STATE	FEDERAL AID ROUTE	FEDERAL AID PROJECT	STATE ROUTE	STATE PROJECT	SHEET NO.
VA.	—	—	29	U000-118-204, C-501, B-601	7(13)

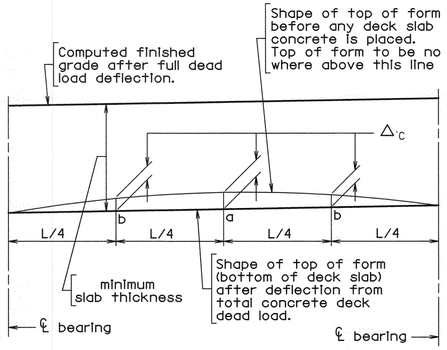

Adjustment of deck slab forms to correct for dead load deflections shall be made by varying thickness of concrete bolster between slab and beam without alteration of slab thickness. Longitudinal screed should be set above final finished grade by amounts = Δ_{C2}

Δ_{C1} = Deflection of beam from dead load of concrete deck slab, bolsters and diaphragms and does not include the deflection of the beam from its own weight.

Δ_{C2} = Deflection of composite section from dead load (e.g. parapet and curb added after deck is cast).

$\Delta_C = \Delta_{C1} + \Delta_{C2}$

ANTICIPATED DEAD LOAD DEFLECTION

Beams	At a		At b	
	Δ_{C1}	Δ_{C2}	Δ_{C1}	Δ_{C2}
1 - 9	1 7/16	1/4	1 1/16	3/16

DEAD LOAD DEFLECTION DIAGRAM

REINFORCING STEEL SCHEDULE

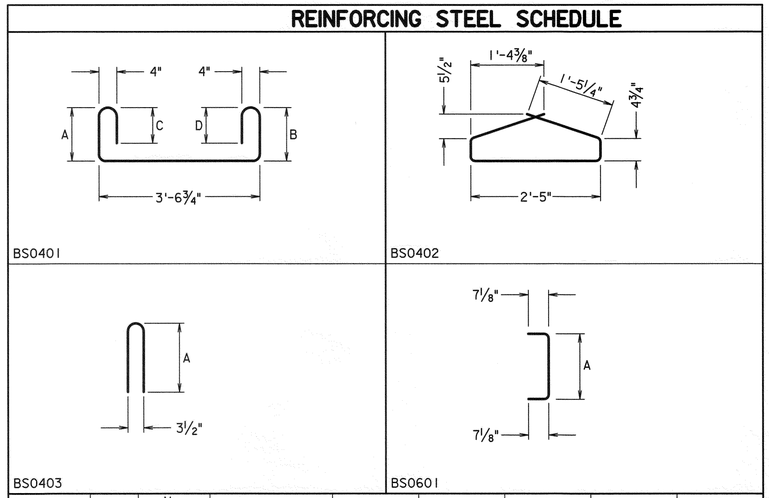

Mark	Size	No. per beam	Length	Pin ø	A	B	C	D
BL0501	#5	8	49'-3"	——				
BS0401	#4	150	6'-7 1/4"	2"	9 1/2"	8 3/4"	8 5/8"	7 7/8"
BS0402	#4	42	5'-9 3/4"	2"				
BS0403	#4	132	8'-2 1/2"	3"	4'-1/2"			
BS0601	#6	36	4'-8 1/2"	4 1/2"	4'-1/2"			

Dimensions in bending diagram are out-to-out of bars.

Reinforcing bars shown in the above schedules are per beam for all beams.

All reinforcing bars shall be corrosion resistant reinforcing steel - low carbon/chromium.

At the Contractor's option and at no additional cost, bar BS0402 may be fabricated as a two piece bar with a minimum 1'-3" lap.

NOTES:

1. Insert plate shall provide uniform bearing over its entire contact area.
2. For beam details and notes, see Sheet 7(12).
3. For bearing details, see Sheet 7(16).

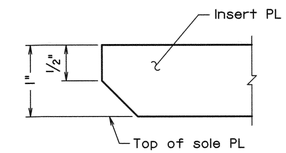

INSERT PLATE CHAMFER DETAIL

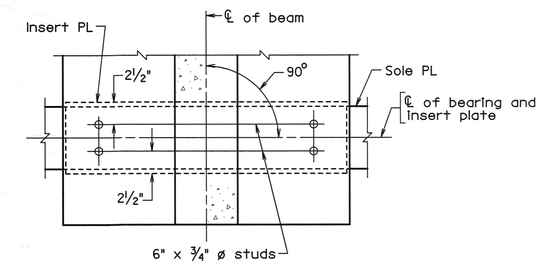

SECTION A-A

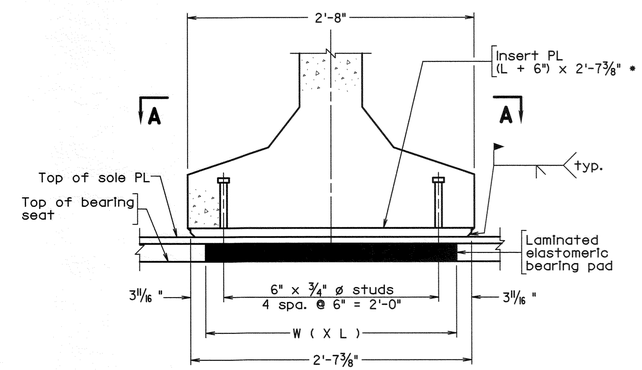

INSERT PLATE DETAILS

* For laminated elastomeric bearing pad dimensions, see sheet 7(16).

Not to scale

No.	Description	Date

Revisions

BRIDGE REPLACEMENT
KEMPER STREET OVER LYNCHBURG EXPRESSWAY

CITY OF LYNCHBURG, VIRGINIA

PRESTRESSED CONCRETE BULB-T MISCELLANEOUS BEAM DETAILS

Designed: MLF
Drawn: DKG
Checked: CMJ

Date	Plan No.	Sheet No.
July 2014	1851BR	13 of 25

Mattern & Craig
CONSULTING ENGINEERS • SURVEYORS
701 FIRST STREET S.W.
ROANOKE, VIRGINIA 24016
(540) 345-9342
FAX (540) 345-7691

PCBT-MISC1 (MOD.) 06-14-2010

COMMONWEALTH OF VIRGINIA
7/29/14
CHAD M. THOMAS
Lic. No. 036962
PROFESSIONAL ENGINEER

MATTERN & CRAIG
ROANOKE, VA
STRUCTURAL ENGINEER

STATE	FEDERAL AID ROUTE	FEDERAL AID PROJECT	STATE ROUTE	STATE PROJECT	SHEET NO.
VA.	—	—	29	U000-118-204, C-501, B-601	7(14)

Notes:

1. For beam details and notes, see Sheet 7(12).
2. BS0401, BS0402, BS0403, BS0601 may be shifted as directed by the Engineer to clear inserts, open holes and studs in insert plates.

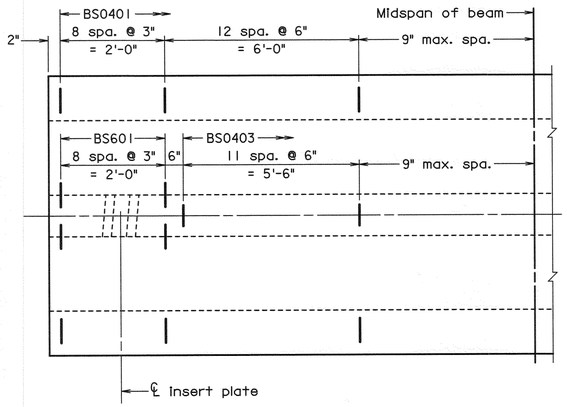

TOP FLANGE AND WEB REINFORCEMENT DETAILS AT END DIAPHRAGMS

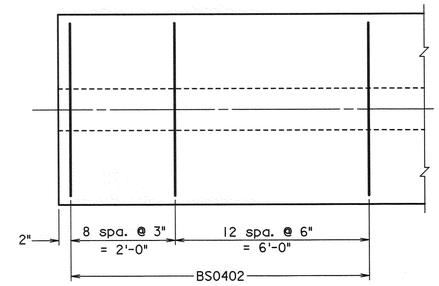

BOTTOM FLANGE REINFORCEMENT END DETAILS AT END DIAPHRAGMS

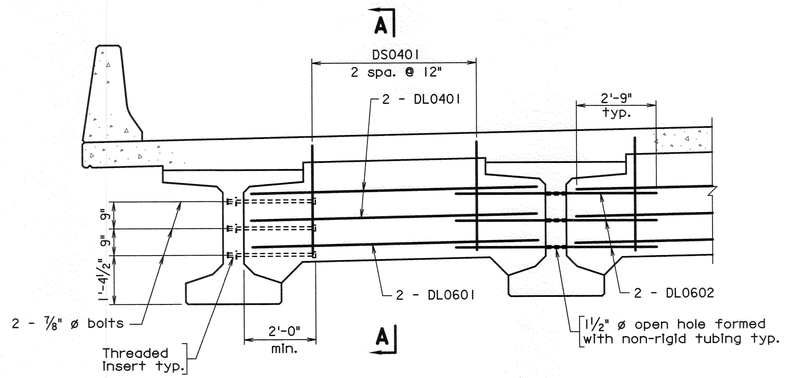

END DIAPHRAGM DETAILS - PCBT-45

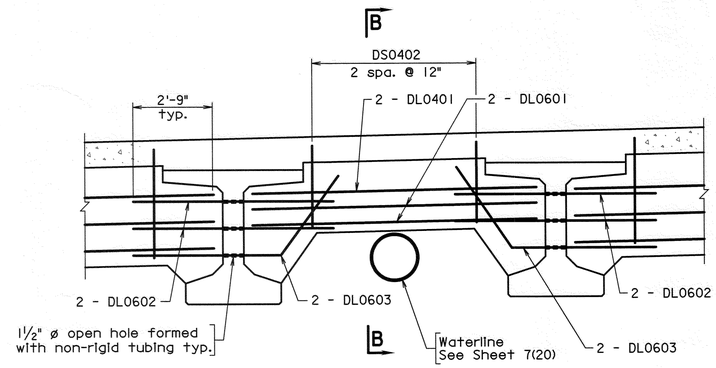

END DIAPHRAGM DETAILS - PCBT-45 BETWEEN BEAMS 7 AND 8

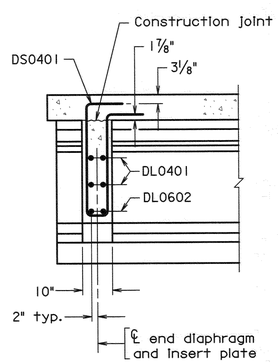

SECTION A-A

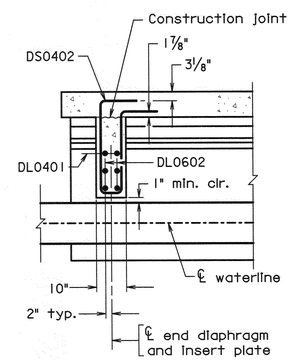

SECTION B-B

Not to scale

Mattern & Craig
CONSULTING ENGINEERS • SURVEYORS
701 FIRST STREET S.W.
ROANOKE, VIRGINIA 24016
(540) 345-9342
FAX (540) 345-7691

PCBT-MISC2 (MOD.) 06-14-2010

COMMONWEALTH OF VIRGINIA
7/29/14
CHAD M. THOMAS
Lic. No. 036962
PROFESSIONAL ENGINEER

MATTERN & CRAIG
ROANOKE, VA
STRUCTURAL ENGINEER

No.	Description	Date
	Revisions	

BRIDGE REPLACEMENT
KEMPER STREET OVER LYNCHBURG EXPRESSWAY

CITY OF LYNCHBURG, VIRGINIA

PRESTRESSED CONCRETE BULB-T MISCELLANEOUS BEAM DETAILS

Designed: MLF	Date	Plan No.	Sheet No.
Drawn: DKA	July 2014	1851BR	14 of 25
Checked: CMT			

STATE	FEDERAL AID ROUTE	FEDERAL AID PROJECT	STATE ROUTE	STATE PROJECT	SHEET NO.
VA.	—	—	29	U000-118-204, C-501, B-601	7(17)

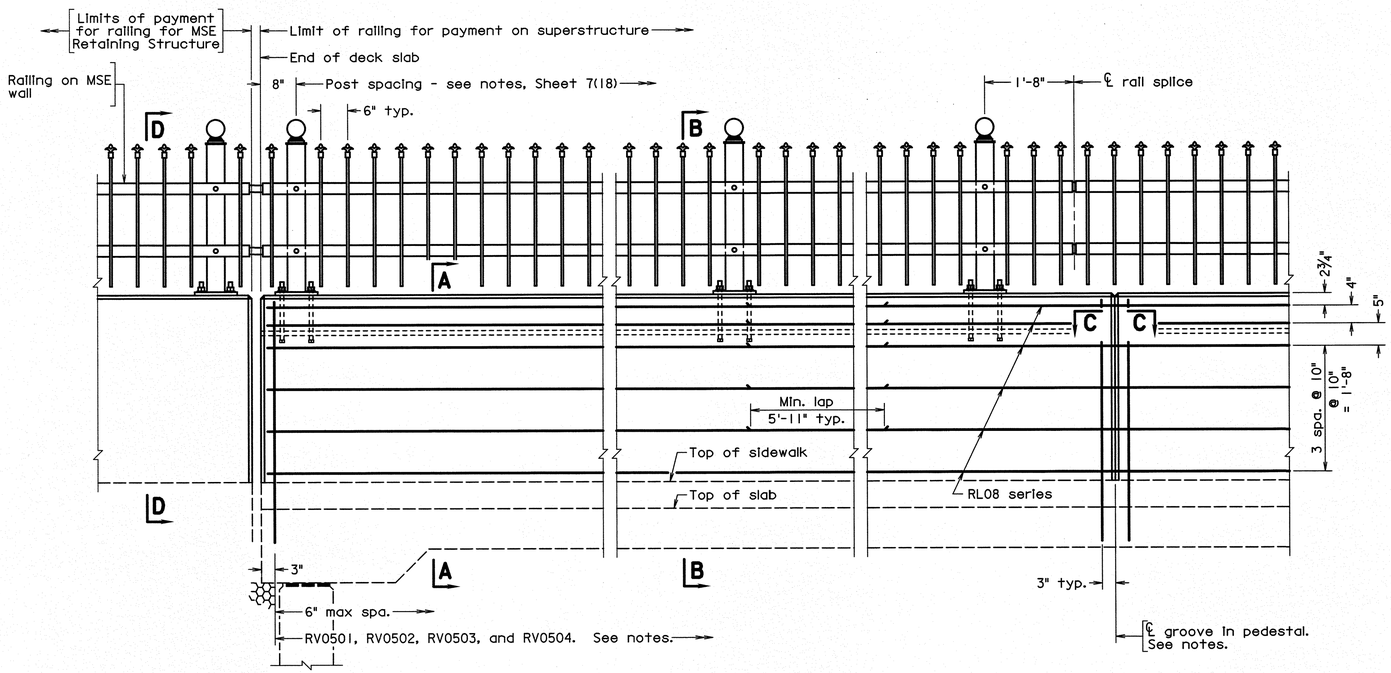

ABUTMENT

ELEVATION

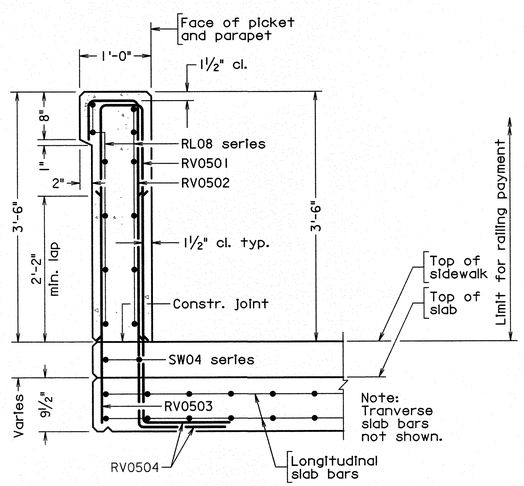

SECTION A-A

Scale: 1" = 1'-0"

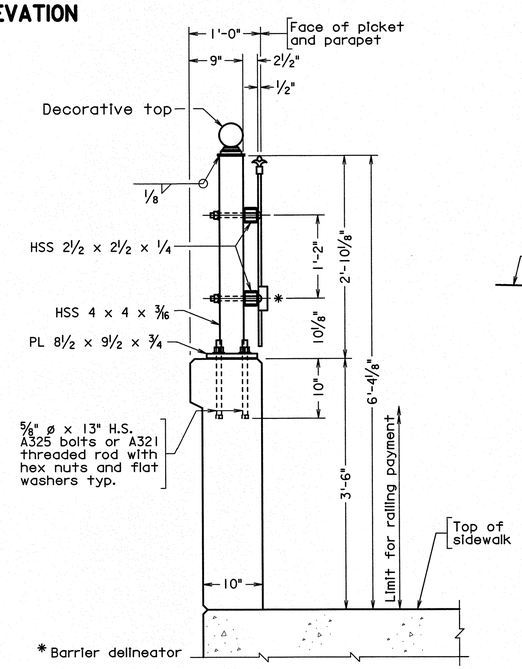

SECTION B-B

Scale: 1" = 1'-0"

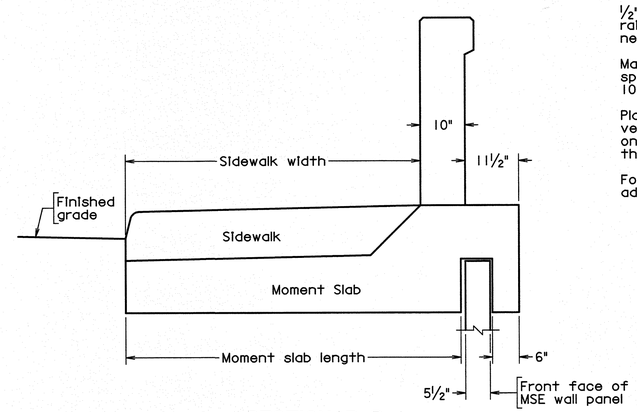

SECTION D-D

Notes:

1. The dimensions shown above are for the MSE wall manufacture's information only. The design of the MSE wall shall include the design of the moment slab, coping, and railing system off of the bridge. See MSE wall notes on Sheet 7(3).
2. Cost for the moment slab, coping, and railing system off of the bridge shall be included in the price bid for MSE Retaining Structure.

Notes:

All reinforcing bars shall be Corrosion Resistant Reinforcing Steel, Class I. Reinforcing bars RV0501 and RV0503 shall alternate with RV502 6" maximum spacing as shown in Section A-A.

All concrete shall be Class A4.

All bevels for concrete on this sheet shall be ¾". Rounded edges with 1" radius may be used in lieu of bevels along top or railing.

Plates shall be ASTM A36 steel.

Post, rail, and picket members shall be ASTM A500 Grade B steel. Steel pipe sleeves shall be ASTM A53. Round head bolts shall be ASTM449. All other bolts shall be ASTM A 325. Nuts shall be ASTM A563, Grade DH or ASTM A194, Grade 2H and washers shall be ASTM F436. All steel shall be hot dip galvanized. After galvanizing, all steel members shall be painted black with the following Tnemec paint system (or approved equal):

Surface Preparation: SSPC-SP7 abrasive sweep blast.
First Coat: Series N69 Black at 4.0-6.0 mils dft.
Second Coat: Series 73 Urethane Black at 2.0-3.0 mils dft.
Total Dry Film Thickness: 60.-9.0 mils dft.

Pickets shall be ½" x ½" solid steel.

Posts shall be seated on neoprene pads ⅛" minimum thickness, having a nominal durometer hardness of 60. Pads shall conform to post base dimensions.

Bolts for attaching rails to posts are ¾" diameter round head (with slot in head) with hex nut and washer. Holes in post and railing tubing shall be ⅞" diameter. Bolt extensions beyond the nut shall be limited to the smaller of one and a half finishing turns or ¼ inch. If the extension is longer, the excess will be cut off, the edges of the bolt end ground so that no sharp edges remain and cold galvanizing applied to damaged galvanized areas.

Cut bottom of posts to match cross slope before welding so that posts will be vertical. Steel shims may be used for adjusting post alignment, maximum thickness of shim build-up not to exceed ⅛". Where more tilting of the post is required, the concrete shall be ground down.

Anchor bolts may be set normal to profile grade.

Barrier delineator size, color, and spacing to be in accordance with the Specifications. Cost of delineator to be included in the price bid for railing. Reflective surface of barrier delineator, in all instances, to be facing oncoming traffic.

½" diameter drain holes shall be provided in both top and bottom rails approximately half-way between posts except at open joints near pier(s). Drain holes shall be provided at each low end of rail.

Maximum spacing of grooves in pedestal shall be limited to 3 x post spacing, shall be centered between posts and shall be no closer than 10'-0" to end of pedestal.

Plan dimensions shown are measured in the respective horizontal and vertical planes. The reinforcing steel shown has been detailed based on a standard ¼" per foot cross slope. The Contractor shall adjust the reinforcing steel as required for other cross slopes.

For details of rail connections, reinforcing steel schedule, and additional notes, see Sheet 7(18).

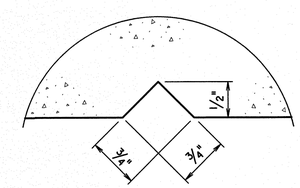

SECTION C-C

Full scale

Groove detail for both sides of rail

COMMONWEALTH OF VIRGINIA
7/29/14
CHAD M. THOMAS
Lic. No. 036992
PROFESSIONAL ENGINEER

MATTERN & CRAIG
ROANOKE, VA
STRUCTURAL ENGINEER

Scale: ¾" = 1'-0" unless otherwise noted.

No.	Description	Date

Revisions

BRIDGE REPLACEMENT
KEMPER STREET OVER LYNCHBURG EXPRESSWAY

CITY OF LYNCHBURG, VIRGINIA

BRIDGE RAILING AND NOTES

Designed: MLF
Drawn: DKA
Checked: MLF

Date	Plan No.	Sheet No.
July 2014	1851BR	17 of 25

Mattern & Craig
CONSULTING ENGINEERS • SURVEYORS
701 FIRST STREET S.W.
ROANOKE, VIRGINIA 24016
(540) 345-3822
FAX (540) 345-7691

STATE	FEDERAL AID ROUTE	FEDERAL AID PROJECT	STATE ROUTE	STATE PROJECT	SHEET NO.
VA.	—	—	29	U000-118-204, C-501, B-601	7(16)

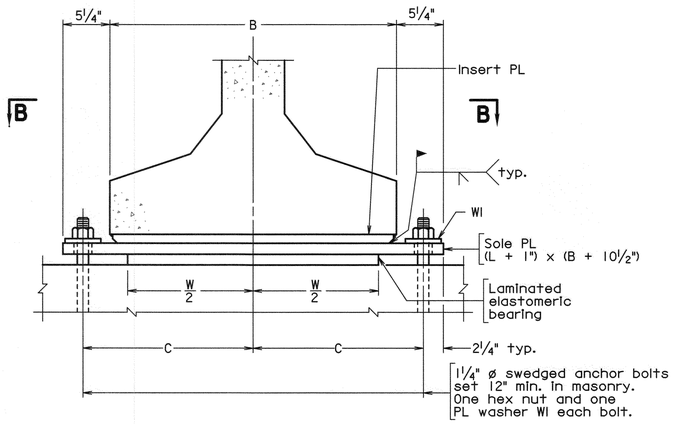

SECTION A-A

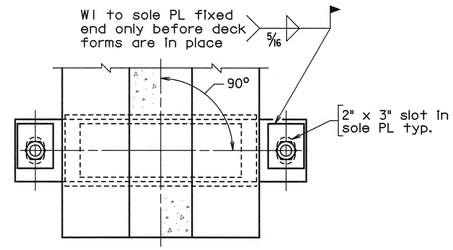

SECTION B-B

Notes:

Material: Elastomer - 50 durometer hardness.
Shim - ASTM A36 or A1011 mild steel.

Elastomeric bearings shall be molded as a single unit.

Bevel sole plates to grade shown in table. Minimum ¾" thickness.

In welding insert plate to sole plate, ample time shall be allowed between weld passes to prevent heat damage to the concrete, sole plate and elastomeric pad. Elastomer shall not be subjected to temperatures higher than 400°F.

For designation of fixed or expansion bearings, see elevation view on Sheet 7(2).

The sole plate shall be galvanized.

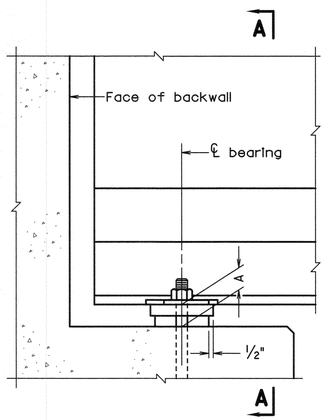

ABUTMENT ELEVATION

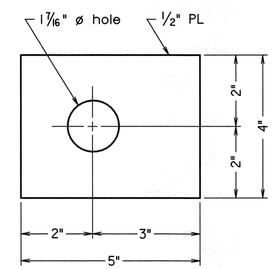

WASHER W1

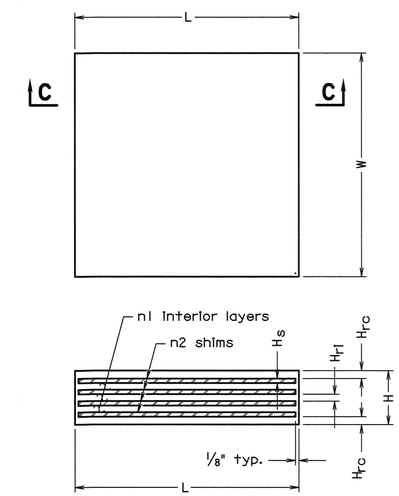

SECTION C-C

LAMINATED ELASTOMERIC BEARING

E / F	Abut.	Beam Type	A	B	C	Laminated Elastomeric Bearing W	L	H	H_{rc}	n1 @ H_{r1}	n2 @ H_s	Grade %	Total Load (kips)
E	A	PCBT	4 1/16	32	19	22	13	3	0.375	3 @ 0.5905	4 @ 0.1196	4.72	226
F	B	PCBT	4 1/16	32	19	22	13	3	0.375	3 @ 0.5905	4 @ 0.1196	4.72	226

All dimensions in table are in inches.
Total Load (kips) is the total unfactored service load with impact per beam.

Not to scale

Mattern & Craig
CONSULTING ENGINEERS • SURVEYORS
701 FIRST STREET S.W.
ROANOKE, VIRGINIA 24016
(540) 345-9342
FAX (540) 345-7691

BBD-8 (MOD.) 06-14-2010

COMMONWEALTH OF VIRGINIA
7/29/14
CHAD M. THOMAS
Lic. No. 036962
PROFESSIONAL ENGINEER

MATTERN & CRAIG
ROANOKE, VA
STRUCTURAL ENGINEER

No.	Description	Date

Revisions

BRIDGE REPLACEMENT
KEMPER STREET OVER LYNCHBURG EXPRESSWAY

CITY OF LYNCHBURG, VIRGINIA

PRESTRESSED BEAM BEARING DETAILS

Designed: MLF
Drawn: RKA
Checked: CMT

Date	Plan No.	Sheet No.
July 2014	1851BR	16 of 25