STATE	FEDERAL AID ROUTE	FEDERAL AID PROJECT	STATE ROUTE	STATE PROJECT	SHEET NO.
VA.	—	—	29	U000-118-204, C-501, B-601	7(17)

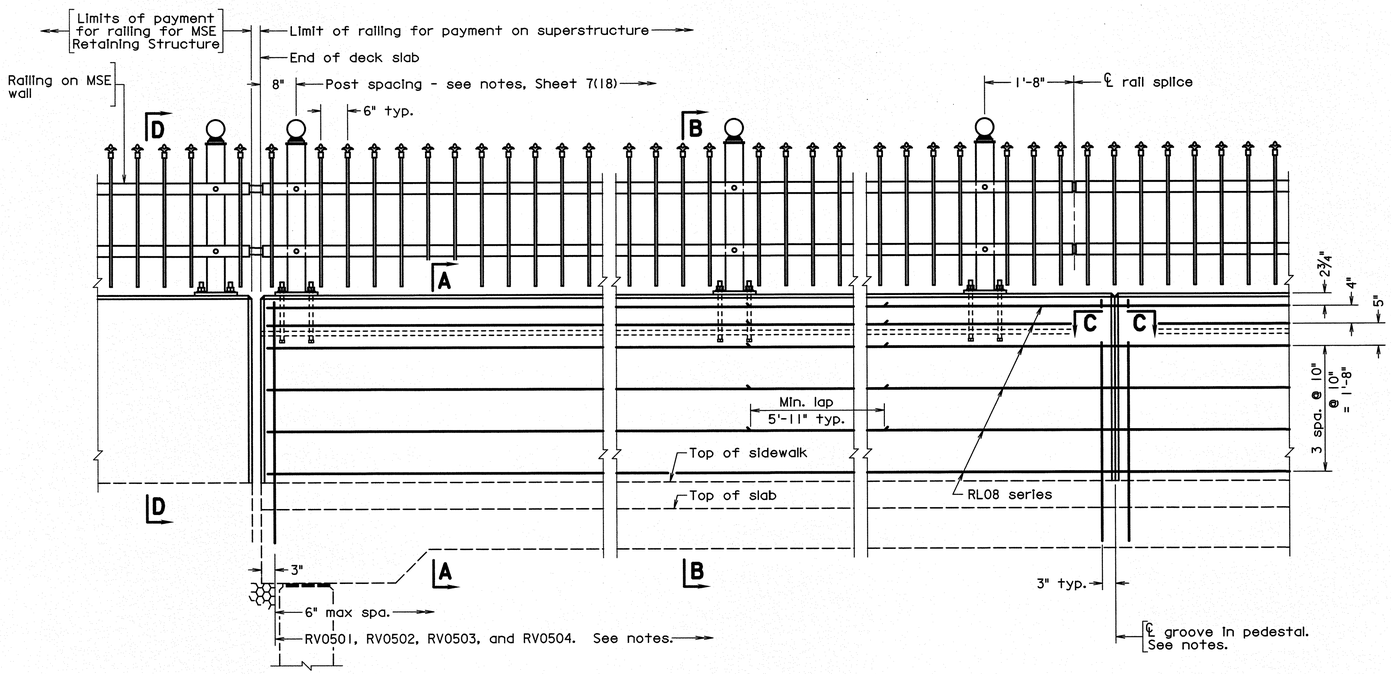

ABUTMENT

ELEVATION

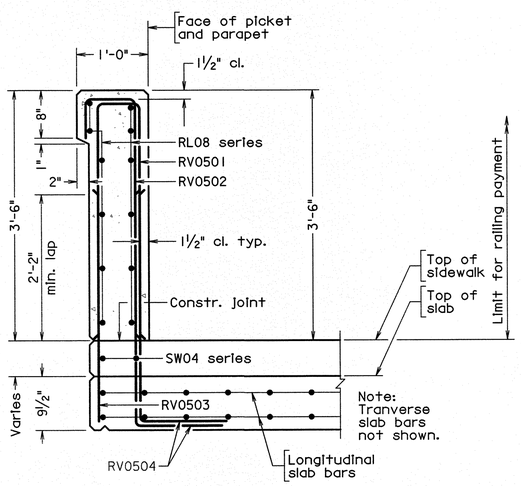

SECTION A-A

Scale: 1" = 1'-0"

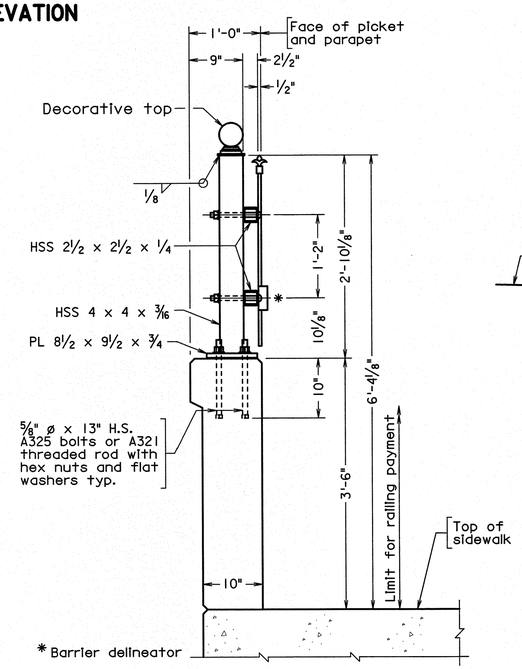

SECTION B-B

Scale: 1" = 1'-0"

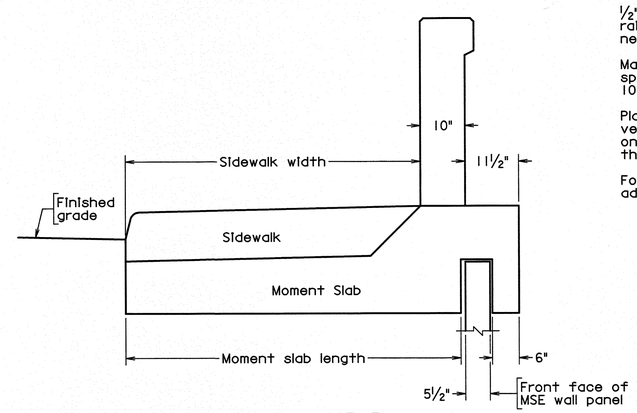

SECTION D-D

Notes:

1. The dimensions shown above are for the MSE wall manufacture's information only. The design of the MSE wall shall include the design of the moment slab, coping, and railing system off of the bridge. See MSE wall notes on Sheet 7(3).
2. Cost for the moment slab, coping, and railing system off of the bridge shall be included in the price bid for MSE Retaining Structure.

Notes:

All reinforcing bars shall be Corrosion Resistant Reinforcing Steel, Class I. Reinforcing bars RV0501 and RV0503 shall alternate with RV502 6" maximum spacing as shown in Section A-A.

All concrete shall be Class A4.

All bevels for concrete on this sheet shall be ¾". Rounded edges with 1" radius may be used in lieu of bevels along top or railing.

Plates shall be ASTM A36 steel.

Post, rail, and picket members shall be ASTM A500 Grade B steel. Steel pipe sleeves shall be ASTM A53. Round head bolts shall be ASTM449. All other bolts shall be ASTM A 325. Nuts shall be ASTM A563, Grade DH or ASTM A194, Grade 2H and washers shall be ASTM F436. All steel shall be hot dip galvanized. After galvanizing, all steel members shall be painted black with the following Tnemec paint system (or approved equal):

Surface Preparation: SSPC-SP7 abrasive sweep blast.
First Coat: Series N69 Black at 4.0-6.0 mils dft.
Second Coat: Series 73 Urethane Black at 2.0-3.0 mils dft.
Total Dry Film Thickness: 60.-9.0 mils dft.

Pickets shall be ½" x ½" solid steel.

Posts shall be seated on neoprene pads ⅛" minimum thickness, having a nominal durometer hardness of 60. Pads shall conform to post base dimensions.

Bolts for attaching rails to posts are ¾" diameter round head (with slot in head) with hex nut and washer. Holes in post and railing tubing shall be ⅞" diameter. Bolt extensions beyond the nut shall be limited to the smaller of one and a half finishing turns or ¼ inch. If the extension is longer, the excess will be cut off, the edges of the bolt end ground so that no sharp edges remain and cold galvanizing applied to damaged galvanized areas.

Cut bottom of posts to match cross slope before welding so that posts will be vertical. Steel shims may be used for adjusting post alignment, maximum thickness of shim build-up not to exceed ⅛". Where more tilting of the post is required, the concrete shall be ground down.

Anchor bolts may be set normal to profile grade.

Barrier delineator size, color, and spacing to be in accordance with the Specifications. Cost of delineator to be included in the price bid for railing. Reflective surface of barrier delineator, in all instances, to be facing oncoming traffic.

½" diameter drain holes shall be provided in both top and bottom rails approximately half-way between posts except at open joints near pier(s). Drain holes shall be provided at each low end of rail.

Maximum spacing of grooves in pedestal shall be limited to 3 x post spacing, shall be centered between posts and shall be no closer than 10'-0" to end of pedestal.

Plan dimensions shown are measured in the respective horizontal and vertical planes. The reinforcing steel shown has been detailed based on a standard ¼" per foot cross slope. The Contractor shall adjust the reinforcing steel as required for other cross slopes.

For details of rail connections, reinforcing steel schedule, and additional notes, see Sheet 7(18).

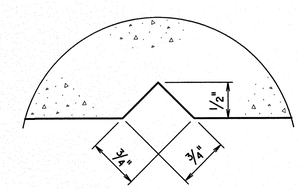

SECTION C-C

Full scale

Groove detail for both sides of rail

Scale: ¾" = 1'-0" unless otherwise noted.

COMMONWEALTH OF VIRGINIA
7/29/14
CHAD M. THOMAS
Lic. No. 036962
PROFESSIONAL ENGINEER

MATTERN & CRAIG
ROANOKE, VA
STRUCTURAL ENGINEER

Mattern & Craig
CONSULTING ENGINEERS • SURVEYORS
701 FIRST STREET S.W.
ROANOKE, VIRGINIA 24016
(540) 342-5372
(540) 345-3202
FAX (540) 345-7691

No.	Description	Date
	Revisions	

BRIDGE REPLACEMENT
KEMPER STREET OVER LYNCHBURG EXPRESSWAY

CITY OF LYNCHBURG, VIRGINIA

BRIDGE RAILING AND NOTES

Designed: MLF	Date	Plan No.	Sheet No.
Drawn: DKA	July 2014	1851BR	17 of 25
Checked: MLF			

STATE	FEDERAL AID ROUTE	FEDERAL AID PROJECT	STATE ROUTE	STATE PROJECT	SHEET NO.
VA.	—	—	29	U000-118-204, C-501, B-601	7(18)

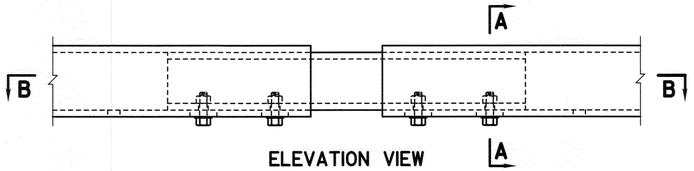

ELEVATION VIEW

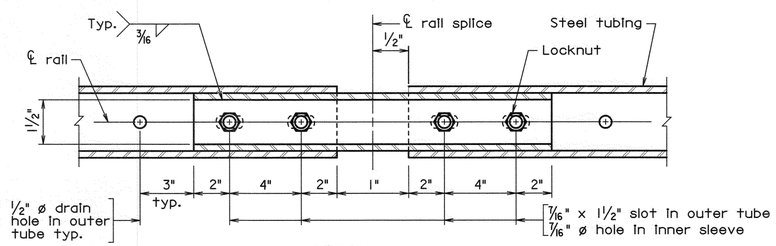

SECTION B-B

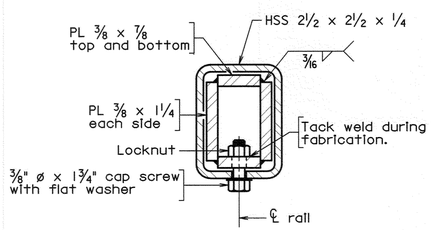

SECTION A-A
SECTION AT RAIL SPLICE

RAIL SPLICE DETAILS

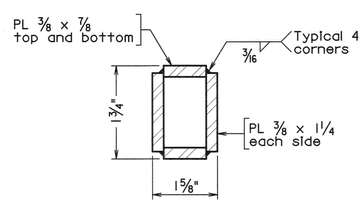

FINISHED DIMENSIONS OF INNER SLEEVE RAIL

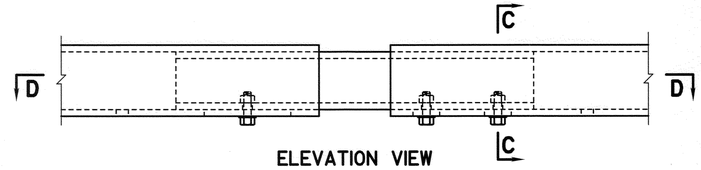

ELEVATION VIEW

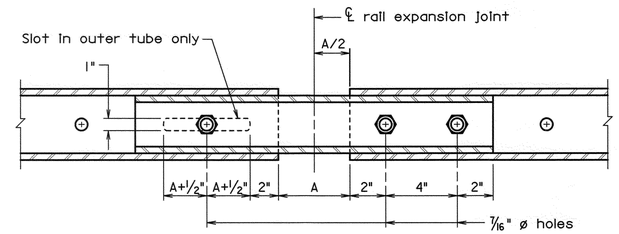

SECTION D-D
For details and dimensions not shown, see Section B-B.

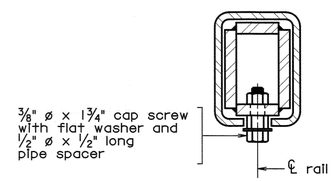

SECTION C-C
Details not shown similar to Section A-A.

RAIL EXPANSION JOINT DETAILS

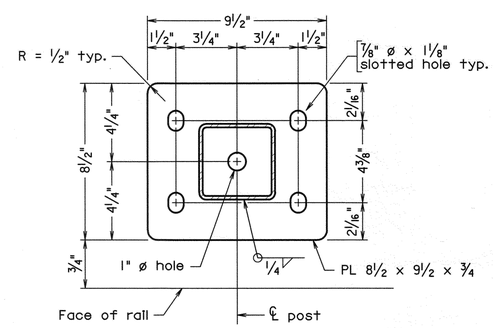

BASE PLATE DETAIL

Notes:

Rails to be continuous over a minimum of 3 posts before splicing.

Posts shall be equally spaced within a span. Maximum spacing is 7'-0". Minimum spacing is 6'-6".

Rail expansion joint shall be provided at each end of the bridge. Dimension A for expansion joints is equal to 2". Bolts in slot shall be tightened only to a point that will allow railing movement.

For steel railing, see Sheet 7(17).

The Contractor shall determine all dimensions and details necessary for installation.

Bid Item for Bridge Railing shall include rails, rail posts, bearing pads, anchor assemblies, sleeves, grounding materials and other associated metal parts as shown on the plans. Also included in this bid item is the concrete noted on sheet 7(17) and reinforcing steel indicated in Reinforcing Steel Schedule.

REINFORCING STEEL SCHEDULE

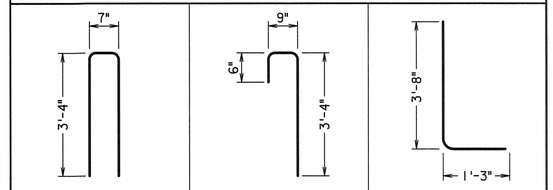

Mark	Size	No.	Pin ø	Length	Location
RL0801	#8	48	—	40'-0"	Parapet
RL0802	#8	24	—	31'-6"	Parapet
RV0501	#5	200	3 3/4"	7'-0"	Parapet
RV0502	#5	200	3 3/4"	4'-4"	Parapet
RV0503	#5	200	—	3'-8"	Parapet
RV0504	#5	400	3 3/4"	4'-10"	Parapet

Dimensions in bending diagram are out-to-out of bars, except as shown.

Not to scale

No.	Description	Date
	Revisions	

BRIDGE REPLACEMENT
KEMPER STREET OVER LYNCHBURG EXPRESSWAY

CITY OF LYNCHBURG, VIRGINIA

RAIL CONNECTIONS AND NOTES

Designed: MLF
Drawn: BKA
Checked: CMJ

Date	Plan No.	Sheet No.
July 2014	1851BR	18 of 25

Mattern & Craig
CONSULTING ENGINEERS • SURVEYORS
701 FIRST STREET S.W.
ROANOKE, VIRGINIA 24016
(540) 345-9342
FAX (540) 345-7691

08-07-2012

BR27D-11 (MOD.)

COMMONWEALTH OF VIRGINIA
7/29/14
CHAD M. THOMAS
Lic. No. 036962
PROFESSIONAL ENGINEER

MATTERN & CRAIG
ROANOKE, VA
STRUCTURAL ENGINEER

STATE	FEDERAL AID ROUTE	FEDERAL AID PROJECT	STATE ROUTE	STATE PROJECT	SHEET NO.
VA.	—	—	29	U000-118-204, C-501, B-601	7(19)

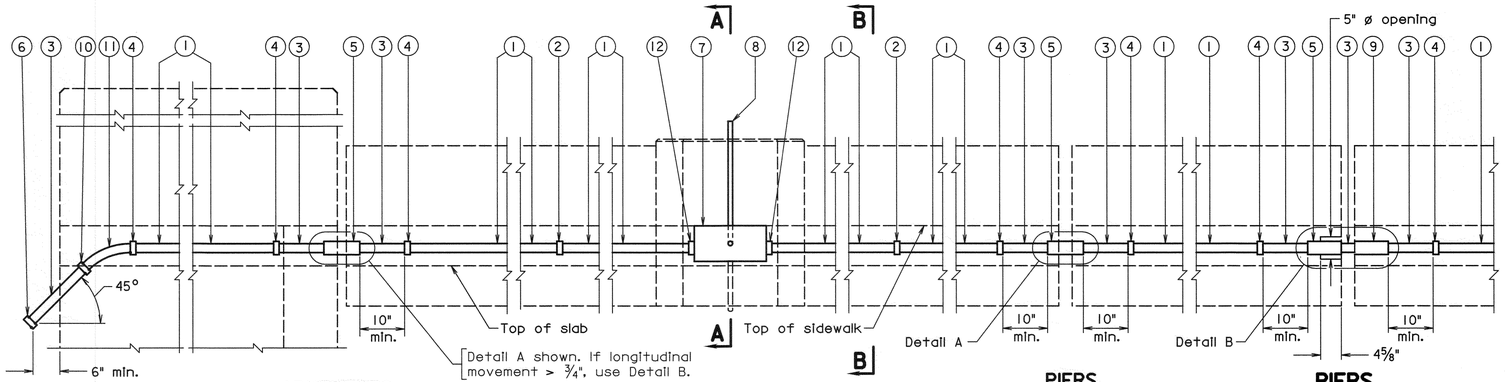

ABUTMENTS

PIERS
For longitudinal movement ≤ ¾"

PIERS
For longitudinal movement > ¾"

CONDUIT LAYOUT
Scale: ¾" = 1'-0"
(Railing not shown)

1. 2" ø nonmetallic conduit
2. Nonmetallic coupling
3. 2" ø metal conduit
4. Adapter to connect nonmetallic conduit to metal conduit
5. Metal expansion and deflection fitting
6. 2" ø pipe cap
7. 8" x 8" x 1'-4" junction box
8. 1" ø metal conduit. Furnish locknut and bushing to connect conduit to junction box.
9. Metal expansion fitting
10. Pipe coupling
11. 2" ø 45° 13" R steel elbow
12. Bell fitting or bushing to connect conduit to junction box

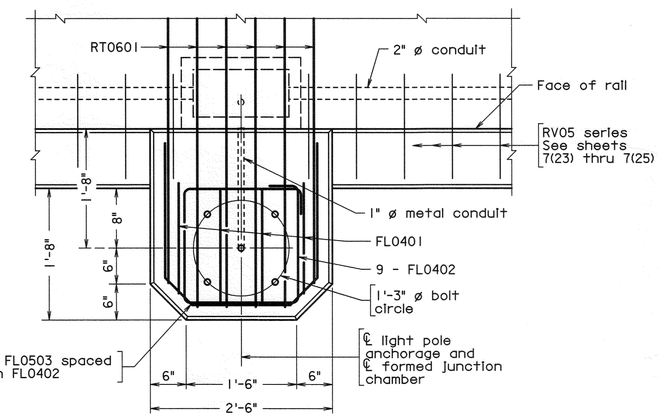

PLAN

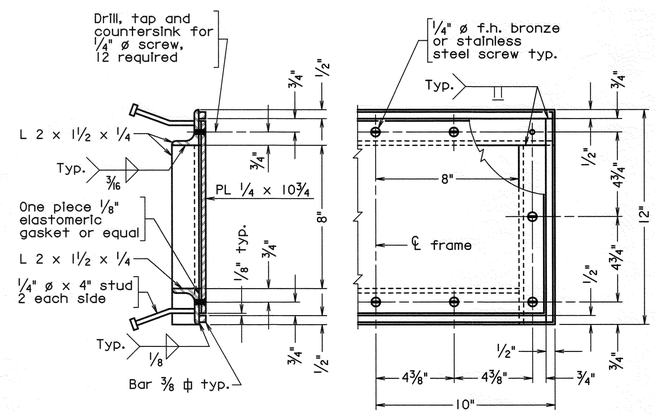

JUNCTION CHAMBER FRAME
Scale: 3" = 1'-0"

Notes:

All reinforcing bars shall be Corrosion Resistant Reinforcing Steel, Class I.

Cut or bend bars to clear junction chamber.

Close adherence to the manufacturer's requirements in regard to clearances for the installation of deflection fittings shall be observed.

Junction chamber frame and cover to be galvanized, after fabrication, in accordance with ASTM A123.

Cost of Bridge Conduit System and anchorages shall be included in price bid for railing.

Anchor bolt specification:

Nuts (Top): ASTM F467 Alloy 6262-T9 or 6061-T6,
(Bottom): ASTM A563.
Thread series for all nuts to be UNC-2B.
Washers: (Top): ASTM B209 Alloy Alclad 2024-T3 or T4, 2¼" ø x 0.165".
(Bottom): ASTM F844.
Rods: 1" diameter, ASTM A276, type 430 or 410 annealed, hot finished. Threads on rods may be rolled or cut. 3½" at each end of rod shall be threaded. Each rod shall be supplied with 3 washers and 3 nuts.

In the designations noted above, top refers to hardware above the top of baseplate. Bottom refers to hardware below the baseplate including embedment in concrete.

The Contractor shall determine all dimensions and details necessary for installation.

Conduit shall be grounded in conformance with Section 700 with grounding materials that conform to Section 238.

Location of light pole shall be adjusted such that rail post clears the light pole base area.

Pedestrian light pole type: Holophane model no. NYA 16 F5J 17 P07 LAB BK.

Pedestrian light fixture type: Holophane model no. WFC15AHP12BC3SH.

For light pole locations, see roadway plans and Sheet 7(2).

Contractor shall coordinate light pole and fixture installation with AEP.

REINFORCING STEEL SCHEDULE

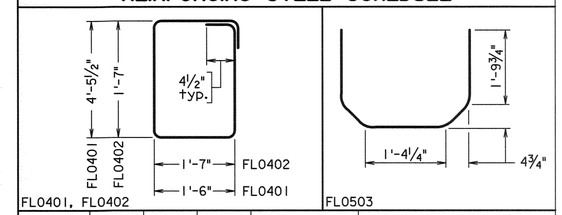

Mark	No.	Size	Pin ø	Length	Location
FL0401	16	#4	2"	12'-5"	Light base
FL0402	36	#4	2"	6'-8"	Light base
FL0503	36	#5	3¾"	6'-0"	Light base
RT0601	24	#6	——	8'-0"	Top of deck slab

Dimensions in bending diagram are out-to-out of bars.

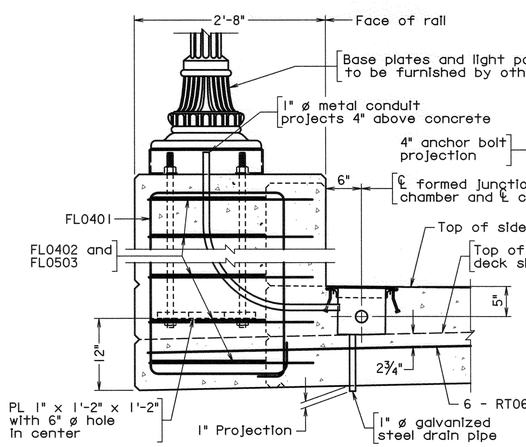

SECTION A-A

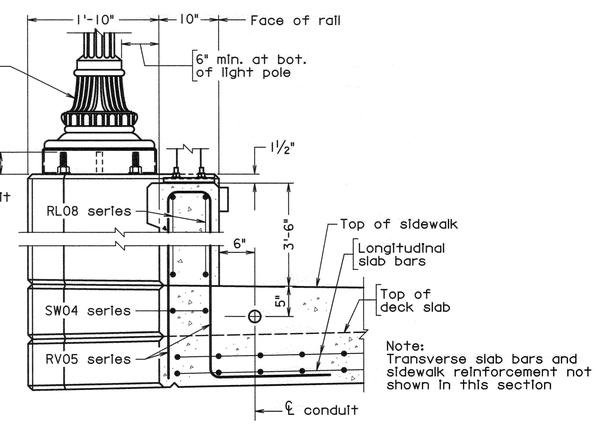

SECTION B-B

Scale: 1" = 1'-0" unless otherwise shown.

Mattern & Craig
CONSULTING ENGINEERS • SURVEYORS
701 FIRST STREET S.W.
ROANOKE, VIRGINIA 24016
(540) 345-9342
FAX (540) 345-7691

08-07-2012

BCS-33A (MOD.)

COMMONWEALTH OF VIRGINIA
7/29/14
CHAD M. THOMAS
Lic. No. 036962
PROFESSIONAL ENGINEER

MATTERN & CRAIG
ROANOKE, VA
STRUCTURAL ENGINEER

No.	Description	Date

Revisions

BRIDGE REPLACEMENT
KEMPER STREET OVER LYNCHBURG EXPRESSWAY

CITY OF LYNCHBURG, VIRGINIA

BRIDGE CONDUIT SYSTEM

Designed: MLF
Drawn: PKA
Checked: CMT

Date	Plan No.	Sheet No.
July 2014	1851BR	19 of 25

STATE	FEDERAL AID ROUTE	FEDERAL AID PROJECT	STATE ROUTE	STATE PROJECT	SHEET NO.
VA.	—	—	29	U000-118-204, C-501, B-601	7(20)

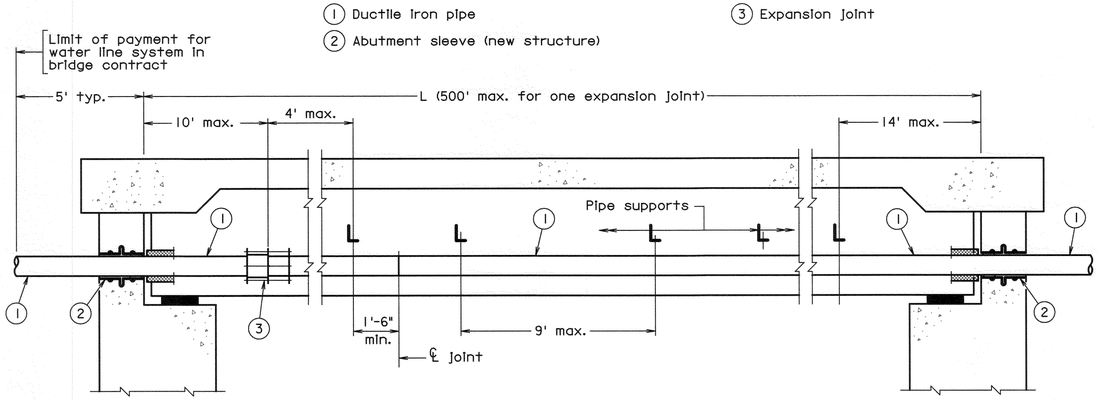

ELEVATION
Not to scale

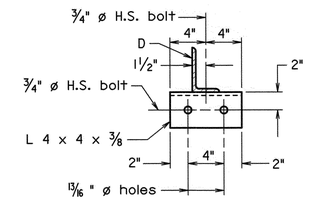

DETAIL A
Scale: 1½" = 1'-0"

Notes:

Material - Ductile iron with mechanical joint (all joints restrained) For Ductile Iron Pipe Specifications see Sheet 11(1) of the Roadway Plan Set.
Stee Casing - API 5L-B ⅜" wall

Structural steel for angles shall be ASTM A36. The angles shall be galvanized in accordance with ASTM A123.

Abutment - Casing as detailed or Century-Line sleeve to be used for proposed structure only. Slope casing or sleeve to match beam grade.
Seal - one link-seal at each face.

Expansion Joint - EBAA Iron EX-TEND 200 with 4" total axial movement; or equal.

Galvanization - Miscellaneous hardware: Rods, nuts, etc. shall be galvanized in accordance with ASTM A153 unless otherwise specified.

Casing Spacer shall be the Spider Support and Spacer Assembly by Spider Manufacturing, or equal product designed for this use.

Insulation - Polyisocyanurate foam insulation with PVC jacket required for pipe and fittings.

Pipe hangers shall be as manufactured by Anvil International, Inc (Grinnell) or equal.

Payment - Water Line System shall be paid for on a lump sum basis, wherein no measurement shall be made, and shall be paid for at the contract lump sum price, which price shall include furnishing and installing ductile iron water main, gate valves, tapping sleeves and valves, bends, fittings, expansion joints, testing, disinfecting (when required), insulation and cover (when required), hangers, rollers, rods, abutment sleeves, link seals, joint restraint (including concrete reaction blocking), abandonment of existing waterlines and miscellaneous hardware; all as detailed on the Water Line System drawing included herein as well as on Plan Sheet series 11 in the roadway plans. Such price shall be full compensation for furnishing all materials, labor, tools, equipment and incidentals necessary to complete the work.

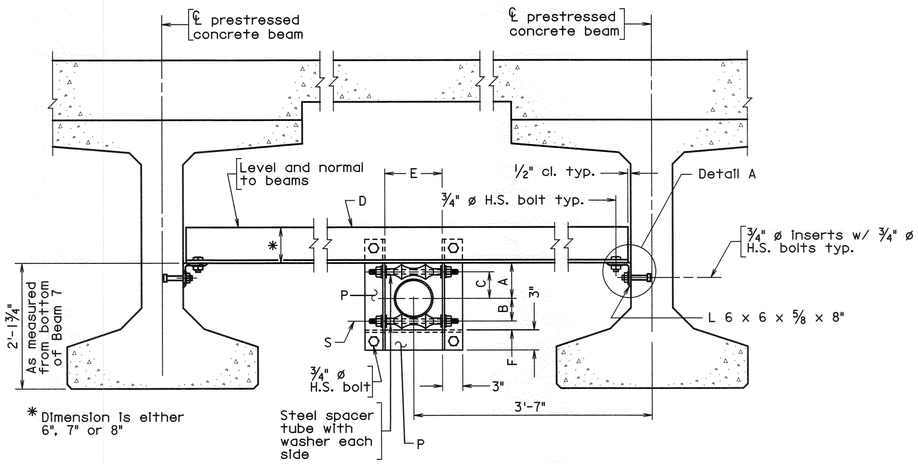

TYPICAL SUPPORT DETAIL AT EXPANSION JOINT
Scale: 1" = 1'-0"

For insulation, use 2" polyisocyanurate insulation with white PVC jacket and protection saddles. Provide support detail on both sides of expansion joint for bridges over 500'.

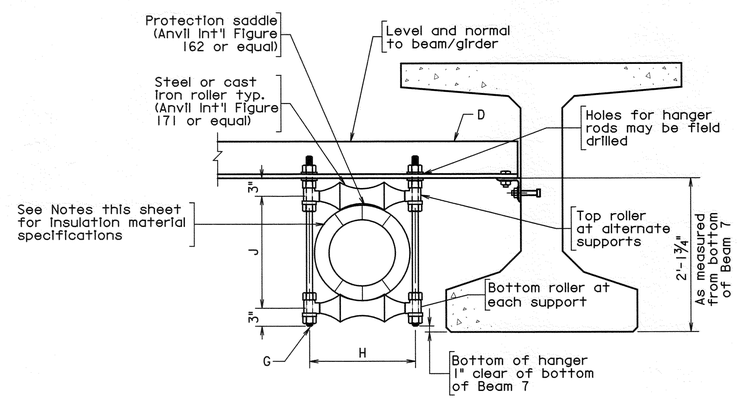

TYPICAL SUPPORT DETAIL
Scale: 1" = 1'-0"

For details not shown, see Typical Support Detail at Expansion Joint.

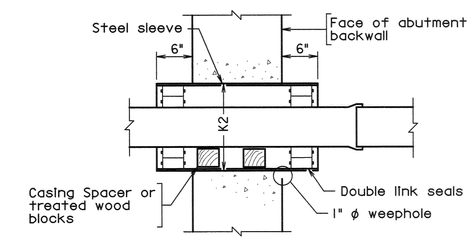

OPTION 1

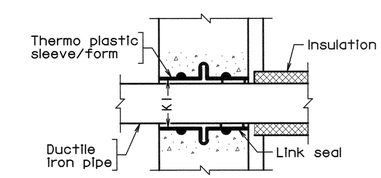

OPTION 2

ABUTMENT SLEEVE DETAIL
Scale: 1" = 1'-0"

DIMENSIONS

Pipe ø	A	B	C	D	E	F	G	H	J	K1	K2	P	S
10"	12½"	9¼"	9½"	L 6 x 4 x ½	1'-5"	2¾"	1"	1'-5¾"	1'-6¾"	1'-2"	1'-6"	L 3 x 3 ½ x ⅜	1⅛"

G = diameter of rod
S = diameter of shaft

Scale as noted.

Mattern & Craig
CONSULTING ENGINEERS • SURVEYORS
701 FIRST STREET S.W.
ROANOKE, VIRGINIA 24016
(540) 345-9342
FAX (540) 345-7691

06-14-2010

BWL-2

COMMONWEALTH OF VIRGINIA
7/29/14
CHAD M. THOMAS
Lic. No. 036962
PROFESSIONAL ENGINEER

MATTERN & CRAIG
ROANOKE, VA
STRUCTURAL ENGINEER

No.	Description	Date
	Revisions	

BRIDGE REPLACEMENT
KEMPER STREET OVER LYNCHBURG EXPRESSWAY
CITY OF LYNCHBURG, VIRGINIA

WATER LINE SYSTEM

Designed: MLF	Date	Plan No.	Sheet No.
Drawn: RKA	July 2014	1851BR	20 of 25
Checked: CMT			

STATE	FEDERAL AID ROUTE	FEDERAL AID PROJECT	STATE ROUTE	STATE PROJECT	SHEET NO.
VA.	—	—	29	U000-118-204, C-501, B-601	7(21)

REINFORCING STEEL SCHEDULE

MARK	NO.	BAR SIZE	PIN DIA. FT-IN	LENGTH FT-IN	LENGTH FT-IN	WEIGHT (LBS.)	LOCATION
				SUPERSTRUCTURE - CORROSION RESISTANT REINFORCING			
DL0401	60	4		06-03		251	END DIAPHRAGM
DL0601	36	6		06-03		338	END DIAPHRAGM
DL0602	76	6		06-07		752	END DIAPHRAGM
DL0603	8	6	00-04 1/2	07-04		88	END DIAPHRAGM
DS0401	42	4	00-03	07-07		213	END DIAPHRAGM
DS0402	6	4	00-03	06-04		26	END DIAPHRAGM
SC0501	326	5		63-06		21592	SLAB
SC0502	22	5		05-07	TO 60-04	757	SLAB
SC0503	6	5		17-11	TO 54-06	227	SLAB
SC0701	338	7		07-09		5355	SLAB
SL0401	242	4		40-00		6467	SLAB
SL0402	121	4		22-03		1799	SLAB
ES0501	8	5	00-03 3/4	09-11		83	SLAB EXTENSION
ES0601	182	6	00-04 1/2	08-09		2381	SLAB EXTENSION
ET0410	2	4		02-01		3	SLAB EXTENSION
ET0411	4	4		03-04		9	SLAB EXTENSION
ET0412	2	4		01-09		3	SLAB EXTENSION
ET0413	32	4		06-01		131	SLAB EXTENSION
ET0501	6	5		63-10		400	SLAB EXTENSION
ET0502	6	5		63-06		398	SLAB EXTENSION
ML0401	10	4		40-00		268	MEDIAN
ML0402	5	4		22-03		75	MEDIAN
MT0401	101	4	00-03	07-01		478	MEDIAN
ST0401	202	4	00-03	07-08		1035	SIDEWALK
SW0401	32	4		40-00		856	SIDEWALK
SW0402	16	4		22-03		238	SIDEWALK
	TOTAL WEIGHT OF PRECEEDING GROUP OF BARS					44223	

DIMENSION TABLE

TYPE	A FT-IN	B FT-IN	C FT-IN	D FT-IN	E P FT-IN	F Q FT-IN	G R FT-IN	H FT-IN	I S FT-IN	J T FT-IN	K U FT-IN	L FT-IN	V FT-IN	N
1	06-03													
1	06-03													
1	06-07													
2	05-01				01-07 7/16	01-07 7/16	02-03							
69	00-08	00-08	00-05	03-03	03-00									
69	00-08	00-08	00-05	02-07 1/4	02-04 1/4									
1	63-06													
1	VARY													
1	VARY				02-04 5/16									
1	07-09				02-11									
1	40-00				02-01									
1	22-03													
6		05-00	05-00											
7		01-02 1/2	05-00	02-06										
1	02-01													
1	03-04													
1	01-09													
1	06-01													
1	63-10													
1	63-06													
1	40-00													
1	22-03													
19	01-00			03-06	00-09 1/2	00-01 9/16	00-09 5/8							
18		01-00	05-11		00-09 1/2	00-01 9/16	00-09 5/8							
1	40-00													
1	22-03													

DIMENSION VARIATION TABLE

MARK	NO. EA. LEN.	DIMEN-SION	FROM FT-IN	TO FT-IN	VARY BY FT-IN	DIMEN-SION	FROM FT-IN	TO FT-IN	VARY BY FT-IN
SC0502	2	A	05-07	60-04	04-11 3/4				
SC0503	2	A	17-11	54-06	18-03 1/2				

BENDING DIAGRAM

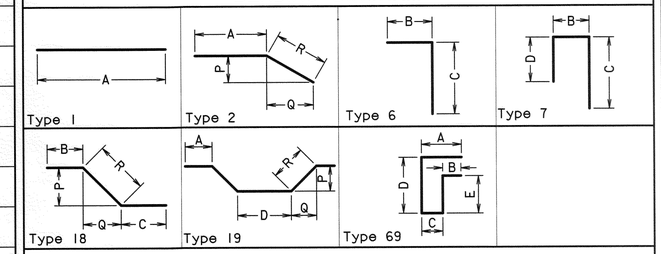

Mattern & Craig
CONSULTING ENGINEERS • SURVEYORS
701 FIRST STREET S.W.
ROANOKE, VIRGINIA 24016
(540) 345-9342
FAX (540) 345-7691

COMMONWEALTH OF VIRGINIA
7/29/14
CHAD M. THOMAS
Lic. No. 036962
PROFESSIONAL ENGINEER

MATTERN & CRAIG
ROANOKE, VA
STRUCTURAL ENGINEER

NOTES:

Dimensions in Bending Diagram are out-to-out of bars.

Weights in schedule are based on density of 490 lb/ft.

If fabrication of deck slab bar is not possible for length detailed and multiple bars are required, bars shall have the least number of Class B splices possible. Splices shall be located approximately at points of contraflexure and splices in alternate bars shall be located in different bays.

No.	Description	Date
	Revisions	

BRIDGE REPLACEMENT
KEMPER STREET OVER LYNCHBURG EXPRESSWAY

CITY OF LYNCHBURG, VIRGINIA

REINFORCING STEEL SCHEDULE SUPERSTRUCTURE

Designed: MLF
Drawn: DKA
Checked: CMT

Date	Plan No.	Sheet No.
July 2014	1851BR	21 of 25

STATE	FEDERAL AID ROUTE	FEDERAL AID PROJECT	STATE ROUTE	STATE PROJECT	SHEET NO.
VA.	—	—	29	U000-118-204, C-501, B-601	7(22)

REINFORCING STEEL SCHEDULE

MARK	NO.	BAR SIZE	PIN DIA. FT-IN	LENGTH FT-IN FT-IN	WEIGHT (LBS.)	LOCATION
				ABUTMENT A - CORROSION RESISTANT REINFORCING		
AB0401	4	4	00-03	03-00	9	WING
AB0402	4	4	00-03	02-08	8	WING
AB0501	16	5	00-03¾	04-05	74	BACKWALL
AF0401	4	4		40-00	107	FOOTING
AF0402	4	4		25-09	69	FOOTING
AF0403	34	4		04-06	103	FOOTING
AF0404	52	4		05-07	194	FOOTING
AF0501	66	5	00-02½	14-05	992	FOOTING
AF0601	12	6		40-00	721	FOOTING
AF0602	12	6		27-09	501	FOOTING
AH0401	10	4		40-00	268	BACKWALL
AH0402	5	4	00-03	16-06	56	BACKWALL
AH0403	5	4	00-03	15-01	51	BACKWALL
AH0404	5	4	00-03	16-05	55	BACKWALL
AH0405	5	4	00-03	14-11	50	BACKWALL
AS0401	72	4	00-03	04-01	196	SEAT
AS0501	36	5		03-07	135	SEAT
AV0401	65	4	00-03	09-05	408	BACKWALL
AV0402	6	4		05-08	23	WING
AV0403	6	4		05-05	22	WING
	TOTAL WEIGHT OF PRECEEDING GROUP OF BARS				4042	
				ABUTMENT B - CORROSION RESISTANT REINFORCING		
AB0421	4	4	00-03	03-00	8	WING
AB0422	4	4	00-03	03-00	9	WING
AB0521	16	5	00-03¾	04-05	74	BACKWALL
AF0421	4	4		40-00	107	FOOTING
AF0422	4	4		25-09	69	FOOTING
AF0423	34	4		04-06	103	FOOTING
AF0424	52	4		05-07	194	FOOTING
AF0521	65	5	00-02½	14-05	977	FOOTING
AF0621	12	6		40-00	721	FOOTING
AF0622	12	6		27-09	501	FOOTING
AH0421	10	4		40-00	268	BACKWALL
AH0422	5	4	00-03	16-06	56	BACKWALL
AH0423	5	4	00-03	15-00	51	BACKWALL
AH0424	5	4	00-03	16-06	56	BACKWALL
AH0425	5	4	00-03	15-01	51	BACKWALL
AS0421	72	4	00-03	04-01	196	SEAT
AS0521	36	5		03-07	135	SEAT
AV0421	65	4	00-03	09-05	408	BACKWALL
AV0422	6	4		05-05	22	WING
AV0423	6	4		05-08	23	WING
	TOTAL WEIGHT OF PRECEEDING GROUP OF BARS				4029	

DIMENSION TABLE

TYPE	A FT-IN	B FT-IN	C FT-IN	D FT-IN	E P FT-IN	F Q FT-IN	G R FT-IN	H FT-IN	I S FT-IN	J T FT-IN	K U FT-IN	L FT-IN	V FT-IN	N
22	01-01½			01-07		00-00 11/16	00-06							
22	01-06¼			00-11¾		00-00⅝	00-06							
25	03-03							00-05						
1	40-00													
1	25-09													
1	04-06													
45	03-00	03-00	02-00											
51		04-06	02-06					00-05⅝						
1	40-00													
1	27-09													
1	40-00													
2	15-00				01-06⅞	00-02⅛	01-07							
2	14-06				00-07 15/16	00-00⅛	00-08							
33	15-00				00-01 3/16	00-01 5/16	01-06¼							
33	14-06				00-06 3/16	00-00⅝	00-06¼							
32		02-07	01-01					00-04½						
1	03-07													
7		00-07	04-06	04-06										
1	05-08													
1	05-05													
22	01-07			01-00¾		00-00 3/16	00-06							
22	01-01½			01-07¼		00-00 3/16	00-06							
25	03-03							00-05						
1	40-00													
1	25-09													
1	04-06													
45	03-00	03-00	02-00											
51		04-06	02-06					00-05⅝						
1	40-00													
1	27-09													
1	40-00													
33	15-00				01-07	00-00 9/16	01-07							
33	14-06				00-07¼	00-00¼	00-07¼							
2	15-00				01-07¼	00-00⅝	01-07¼							
2	14-06				00-08	00-00¼	00-08							
32		02-07	01-01					00-04½						
1	03-07													
7		00-07	04-06	04-06										
1	05-05													
1	05-08													

DIMENSION VARIATION TABLE

MARK	NO. EA. LEN.	DIMEN-SION	FROM FT-IN	TO FT-IN	VARY BY FT-IN	DIMEN-SION	FROM FT-IN	TO FT-IN	VARY BY FT-IN

BENDING DIAGRAM

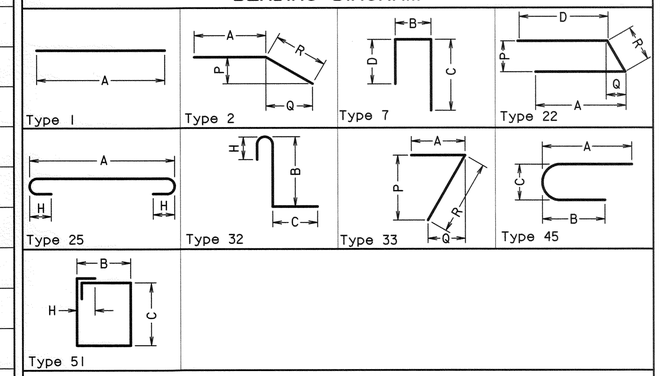

Mattern & Craig
CONSULTING ENGINEERS • SURVEYORS
701 FIRST STREET S.W.
ROANOKE, VIRGINIA 24016
(540) 345-9342
FAX (540) 345-7691

COMMONWEALTH OF VIRGINIA
7/29/14
CHAD M. THOMAS
Lic. No. 036962
PROFESSIONAL ENGINEER

MATTERN & CRAIG
ROANOKE, VA
STRUCTURAL ENGINEER

NOTES:

Dimensions in Bending Diagram are out-to-out of bars.

Weights in schedule are based on density of 490 lb/ft.

If fabrication of deck slab bar is not possible for length detailed and multiple bars are required, bars shall have the least number of Class B splices possible. Splices shall be located approximately at points of contraflexure and splices in alternate bars shall be located in different bays.

No.	Description	Date
	Revisions	

BRIDGE REPLACEMENT
KEMPER STREET OVER LYNCHBURG EXPRESSWAY

CITY OF LYNCHBURG, VIRGINIA

REINFORCING STEEL SCHEDULE ABUTMENTS

Designed: MLF
Drawn: DKA
Checked: CMJ

Date: July 2014

Plan No.: 1851BR

Sheet No.: 22 of 25

STATE	FEDERAL AID ROUTE	FEDERAL AID PROJECT	STATE ROUTE	STATE PROJECT	SHEET NO.
VA.	—	—	29	U000-118-204, C-501, B-601	7(23)

BORING NO. 1

ABUTMENT A

STATION: 16+32 OFFSET: 42' L
LATITUDE: XX.X °N LONGITUDE: XX.X °W
SURFACE ELEVATION: 694 ft COORD. DATUM: XXX

Date(s) Drilled: 9 JUN 14
Drilling Method(s): N-series double-tube wire-line core barrel w/ diamond bit
SPT Method: Automatic SPT hammer
Other Test(s)
Driller: xxx
Logger: JRC

GROUND WATER
El. N/A

FIELD DATA

DEPTH (ft)	ELEVATION (ft)	STANDARDED PENETRATION TEST HAMMER BLOWS	SAMPLE INTERVAL	FIELD DESCRIPTION OF STRATA
				0.0 / 694 TOPSOIL
				0.2 / 693.8 FILL: BROWN MICACEOUS SANDY SILT
2		3 5 6	2.0–3.5	2.0 / 692 RESIDUUM: TAN AND GRAY MICACEOUS SANDY SILT
4	690			
6		2 3 7	4.5–6.0	
				6.0 / 688 BROWNISH-GRAY MICACEOUS SILTY SAND
8		7 9 12	7.5–9.0	
10	685	5 7 9	9.5–11.0	
12				
14	680	3 5 8	14.5–16.0	SAMPLE 14.5'-16.0' NON-PLASTIC (SM) 100.0% PASSING NO. 4 19.9% PASSING NO. 200
16				
18				
20	675	3 7 12	19.5–21.0	
22				
24	670	9 13 14	24.5–26.0	
26				
28				28.0 / 666 TAN AND REDDISH-TAN MICACEOUS SILTY SAND
30	665	2 13 27	29.5–31.0	
32				32.0 / 662 HIGHLY WEATHERED TO DECOMPOSED BROWN SCHIST
34	660			

LAB DATA: LIQUID LIMIT (LL), PLASTICITY INDEX (PI), MOISTURE CONTENT (%)

REMARKS:

PAGE 1 OF 2

BORING NO. 1

ABUTMENT A

STATION: 16+32 OFFSET: 42' L
LATITUDE: XX.X °N LONGITUDE: XX.X °W
SURFACE ELEVATION: 694 ft COORD. DATUM: XXX

Date(s) Drilled: 9 JUN 14
Drilling Method(s): N-series double-tube wire-line core barrel w/ diamond bit
SPT Method: Automatic SPT hammer
Other Test(s)
Driller: xxx
Logger: JRC

GROUND WATER
El. N/A

FIELD DATA

DEPTH (ft)	ELEVATION (ft)	STANDARDED PENETRATION TEST HAMMER BLOWS	SAMPLE INTERVAL	CORE RECOVERY (%)	ROCK QUALITY DESIGNATION (%)	FIELD DESCRIPTION OF STRATA
34	660	33 50	34.5–35.4			SAMPLE 34.5'-35.4' VERY HARD LAST 10 BLOWS
36						AUGER SCRAPING AND BUMPING 34.5'-39.5'
38	655					
40		40	39.5–40.0	53	34	SAMPLE 39.5'-40.0' BOUNCING LAST 10 BLOWS; 40.0 / 654 TOP OF ROCK: DARK GRAY SCHIST
42						
44	650			90	75	CORE BARREL BLOCKED AT 43.2'; 43.2 / 650.8 WEATHERED ZONE
46						43.6 / 650.4 DARK GRAY SCHIST
48	645			94	84	46.1 / 647.9 WEATHERED ZONE
50						46.6 / 647.4 GRAY SCHIST
52						
54	640					52.9 / 641.1 BOTTOM OF HOLE COMPLETED: 5:00 PM, 9 JUN 14

W.L. 13 JUNE: DRY

LAB DATA: LIQUID LIMIT (LL), PLASTICITY INDEX (PI), MOISTURE CONTENT (%)

REMARKS:

PAGE 2 OF 2

SUBSURFACE INFORMATION - Boring Logs

This subsurface information shown on the boring logs in these plans was obtained with reasonable care and recorded in good faith solely for use by the City in establishing design controls for the project. The City has no reason to suspect that such information is not reasonably accurate as an approximate indication of the subsurface conditions at the sites where the borings were taken. The City does not in any way warrant or guarantee that such data can be projected as indicative of conditions beyond the limits of the borings shown; and any such projections by bidders are purely interpretive and altogether speculative. Further, the City does not in any way guarantee, either expressly or by implication, the sufficiency of the information for bid purposes.

The boring logs are made available to bidders in order that they may have access to subsurface data identical to that which is possessed by the City, and are not intended as a substitute for personal investigation, interpretation and judgment by the bidders.

COMMONWEALTH OF VIRGINIA
7/29/14
CHAD M. THOMAS
Lic. No. 036562
PROFESSIONAL ENGINEER

MATTERN & CRAIG
ROANOKE, VA
STRUCTURAL ENGINEER

Mattern & Craig
CONSULTING ENGINEERS • SURVEYORS
701 FIRST STREET S.W.
ROANOKE, VIRGINIA 24016
(540) 345-9342
FAX (540) 345-7691

No.	Description	Date

Revisions

BRIDGE REPLACEMENT
KEMPER STREET OVER LYNCHBURG EXPRESSWAY

CITY OF LYNCHBURG, VIRGINIA

ENGINEERING GEOLOGY I

Designed: MLF
Drawn: DKA
Checked: CMT

Date	Plan No.	Sheet No.
July 2014	1851BR	23 of 25

STATE	FEDERAL AID ROUTE	FEDERAL AID PROJECT	STATE ROUTE	STATE PROJECT	SHEET NO.
VA.	—	—	29	U000-118-204, C-501, B-601	7(24)

Mattern & Craig
CONSULTING ENGINEERS • SURVEYORS
701 FIRST STREET S.W.
ROANOKE, VIRGINIA 24016
(540) 345-9342
FAX (540) 345-7691

BORING NO. 2 — ABUTMENT B

STATION: 18+35 OFFSET: 75' L
LATITUDE: XX.X 'N LONGITUDE: XX.X 'W
SURFACE ELEVATION: 674 ft COORD. DATUM: XXX

Date(s) Drilled: 11 JUN 14
Drilling Method(s): N-series double-tube wire-line core barrel w/ diamond bit
SPT Method: Automatic SPT hammer
Other Test(s)
Driller: xxx
Logger: JRC

GROUND WATER
El. N/A

FIELD DATA: DEPTH (ft), ELEVATION (ft), SOIL: STANDARDED PENETRATION TEST HAMMER BLOWS, SOIL RECOVERY (%), SAMPLE LEGEND, SAMPLE INTERVAL; ROCK: CORE RECOVERY (%), ROCK QUALITY DESIGNATION; STRATA LEGEND

LAB DATA: LIQUID LIMIT (LL), PLASTICITY INDEX (PI), MOISTURE CONTENT (%)

FIELD DESCRIPTION OF STRATA

Depth (ft)	Elevation (ft)	Standard Penetration Test Hammer Blows	Sample Interval	Core Recovery (%)	Rock Quality Designation	Field Description of Strata
						0.0 / 674 TOPSOIL
						0.5 / 673.5 BROWN MICACEOUS SILT
2		2 3 6	2.0–3.5			1.5 / 672.5 RESIDUUM: RED MICACEOUS CLAYEY SILT
4	670					4.0 / 670 RED, GRAY AND BROWN MICACEOUS SILTY SAND
6		5 8 9	5.0–6.5			
8		3 3 4	7.5–9.0			7.0 / 667 TAN MICACEOUS SILTY SAND; SAMPLE 7.5'-9.0'; NON-PLASTIC (SM); 100.0% PASSING NO. 4; 43.3% PASSING NO. 200
10	665	4 5 5	10–11.5			9.5 / 664.5 GRAY-BROWN AND TAN MICACEOUS SILTY SAND
12						
14	660					
16		12 24 30	15–16.4			16.0 / 658 HIGHLY WEATHERED TO DECOMPOSED BROWN SCHIST
18	655					
20		30	20–20.2	99	0	20.2 / 653.8 TOP OF ROCK: WEATHERED TO PARTIALLY WEATHERED TAN AND GRAY SCHIST
22						SAMPLE 20.0'-20.2'; TOOLS BOUNCING; CORE BARREL BLOCKED AT 21.0'
24	650					
26				65	20	22.3 / 651.7 WEATHERED TAN AND GRAY SCHIST
28						
30	645					28.6 / 645.4 WEATHERED TO PARTIALLY WEATHERED TAN AND GRAY SCHIST
32				90	36	30.9 / 643.1 BOTTOM OF HOLE; COMPLETED: 1:50 PM, 11 JUN 14; W.L. 13 JUNE: DRY
34	640					

REMARKS:

PAGE 1 OF 1

BORING NO. 3 — ABUTMENT B

STATION: 18+35 OFFSET: 63' R
LATITUDE: XX.X 'N LONGITUDE: XX.X 'W
SURFACE ELEVATION: 685 ft COORD. DATUM: XXX

Date(s) Drilled: 11 JUN 14
Drilling Method(s): N-series double-tube wire-line core barrel w/ diamond bit
SPT Method: Automatic SPT hammer
Other Test(s)
Driller: xxx
Logger: JRC

GROUND WATER
El. N/A

FIELD DATA: DEPTH (ft), ELEVATION (ft), SOIL: STANDARDED PENETRATION TEST HAMMER BLOWS, SOIL RECOVERY (%), SAMPLE LEGEND, SAMPLE INTERVAL; ROCK: CORE RECOVERY (%), ROCK QUALITY DESIGNATION; STRATA LEGEND

LAB DATA: LIQUID LIMIT (LL), PLASTICITY INDEX (PI), MOISTURE CONTENT (%)

FIELD DESCRIPTION OF STRATA

Depth (ft)	Elevation (ft)	Standard Penetration Test Hammer Blows	Sample Interval	Core Recovery (%)	Rock Quality Designation	Field Description of Strata
						0.0 / 685 TOPSOIL
						0.5 / 684.5 RESIDUUM: REDDISH-TAN MICACEOUS SILTY SAND
2		8 30	2.0–3.0			
4						
6	680	3 9 10	5.0–6.5			
8		12 18 30	7.5–8.9			7.0 / 678 TAN, REDDISH-TAN AND GRAY SILTY SAND; SAMPLE 7.5'-8.9'; NON-PLASTIC (SM); 92.0% PASSING NO. 4; 20.4% PASSING NO. 200
10	675	25 16 18	10–11.5			
12						
14						
16	670	30	15–15.4			14.0 / 671 HIGHLY WEATHERED TO DECOMPOSED TAN SCHIST
18						
20	665	20	20–20.2	99	22	20.2 / 664.8 TOP OF ROCK: PARTIALLY WEATHERED TAN AND GRAY SCHIST; SAMPLE 20.0'-20.2'; TOOLS BOUNCING
22						
24				92	62	21.7 / 663.3 HIGHLY WEATHERED TO WEATHERED GRAY BROWN SCHIST
26	660					22.1 / 662.9 PARTIALLY WEATHERED TO WEATHERED GRAY SCHIST
28						
30	655			98	78	
32						
34						
36	650					34.2 / 650.8 BOTTOM OF HOLE; COMPLETED: 11:45 AM, 12 JUN 14; W.L. 13 JUNE: DRY

REMARKS:

PAGE 1 OF 1

SUBSURFACE INFORMATION - Boring Logs

This subsurface information shown on the boring logs in these plans was obtained with reasonable care and recorded in good faith solely for use by the City in establishing design controls for the project. The City has no reason to suspect that such information is not reasonably accurate as an approximate indication of the subsurface conditions at the sites where the borings were taken. The City does not in any way warrant or guarantee that such data can be projected as indicative of conditions beyond the limits of the borings shown; and any such projections by bidders are purely interpretive and altogether speculative. Further, the City does not in any way guarantee, either expressly or by implication, the sufficiency of the information for bid purposes.

The boring logs are made available to bidders in order that they may have access to subsurface data identical to that which is possessed by the City, and are not intended as a substitute for personal investigation, interpretation and judgment by the bidders.

COMMONWEALTH OF VIRGINIA
7/29/14
CHAD M. THOMAS
Lic. No. 036962
PROFESSIONAL ENGINEER

MATTERN & CRAIG
ROANOKE, VA
STRUCTURAL ENGINEER

No.	Description	Date

Revisions

BRIDGE REPLACEMENT
KEMPER STREET OVER LYNCHBURG EXPRESSWAY
CITY OF LYNCHBURG, VIRGINIA

ENGINEERING GEOLOGY 2

Designed: MLF
Drawn: DKA
Checked: CMT

Date	Plan No.	Sheet No.
July 2014	1851BR	24 of 25

STATE	FEDERAL AID ROUTE	FEDERAL AID PROJECT	STATE ROUTE	STATE PROJECT	SHEET NO.
VA.	—	—	29	U000-118-204, C-501, B-601	7(25)

BORING NO. 4

ABUTMENT A

STATION: 16+08 OFFSET: 40' R
LATITUDE: XX.X °N LONGITUDE: XX.X °W
SURFACE ELEVATION: 696 ft COORD. DATUM: XXX

FIELD DATA

Date(s) Drilled: 12 JUN 14
Drilling Method(s): N-series double-tube wire-line core barrel w/ diamond bit
SPT Method: Automatic SPT hammer
Other Test(s)
Driller: xxx
Logger: JRC

GROUND WATER
El. N/A

DEPTH (ft)	ELEVATION (ft)	STANDARDED PENETRATION TEST HAMMER BLOWS	SAMPLE INTERVAL	CORE RECOVERY (%)	FIELD DESCRIPTION OF STRATA	LIQUID LIMIT (LL)	PLASTICITY INDEX (PI)	MOISTURE CONTENT (%)
	695				0.0 / 696 TOPSOIL 0.5 / 695.5 RESIDUUM: TAN AND ORANGE-TAN MICACEOUS SILTY SAND			
2		3 6 9	2.0–3.5					
4								
6	690	5 6 7	5.0–6.5					
8		7 14 16	7.5–9.0					
10	685	2 3 6	10–11.5		9.5 / 686.5 TAN AND LIGHT MAROON SILT			
12								
14					12.5 / 683.5 TAN AND ORANGE-TAN MICACEOUS SILTY SAND			
16	680	14 16 16	15–16.5		SAMPLE 15.0' – 16.5' NON-PLASTIC (SM) 100% PASSING NO. 4 13.0% PASSING NO. 200			
18								
20	675	11 14 22	20–21.5					
22								
24								
26	670	15 21 30	25–26.4		26.0 / 670 HIGHLY WEATHERED TO DECOMPOSED TAN SCHIST			
28								
30	665	30 49 30	30.0–31.3		SAMPLE 30.0' – 31.3' TOOLS BOUNCING CORE BARREL ON – HARD BRIEFLY CORED FROM 31.3' TO 47.0' NO RECOVERY			
32								
34				0				

REMARKS:

PAGE 1 OF 2

BORING NO. 4

ABUTMENT A

STATION: 16+08 OFFSET: 40' R
LATITUDE: XX.X °N LONGITUDE: XX.X °W
SURFACE ELEVATION: 696 ft COORD. DATUM: XXX

FIELD DATA

Date(s) Drilled: 12 JUN 14
Drilling Method(s): N-series double-tube wire-line core barrel w/ diamond bit
SPT Method: Automatic SPT hammer
Other Test(s)
Driller: xxx
Logger: JRC

GROUND WATER
El. N/A

DEPTH (ft)	ELEVATION (ft)	CORE RECOVERY (%)	ROCK QUALITY DESIGNATION	FIELD DESCRIPTION OF STRATA	LIQUID LIMIT (LL)	PLASTICITY INDEX (PI)	MOISTURE CONTENT (%)
				CORED FROM 31.3' TO 47.0', NO RECOVERY			
36	660	0					
38							
40	655	0	0				
42							
44							
46	650	0	0				
48		0	0	47.0 / 649 TOP OF ROCK: WEATHERED TO HIGHLY WEATHERED TAN AND GRAY SCHIST			
50	645	86 71	8 0				
52				51.9 / 644.1 HIGHLY WEATHERED TAN AND BROWN SCHIST			
54		0	0				
56	640			TOOLS BINDING 54.2 / 641.8 BOTTOM OF HOLE COMPLETED: 3:45 PM, 13 JUN 14			
58							
60	635						
62							
64							
66	630						
68							

REMARKS:

PAGE 2 OF 2

SUBSURFACE INFORMATION - Boring Logs

This subsurface information shown on the boring logs in these plans was obtained with reasonable care and recorded in good faith solely for use by the City in establishing design controls for the project. The City has no reason to suspect that such information is not reasonably accurate as an approximate indication of the subsurface conditions at the sites where the borings were taken. The City does not in any way warrant or guarantee that such data can be projected as indicative of conditions beyond the limits of the borings shown; and any such projections by bidders are purely interpretive and altogether speculative. Further, the City does not in any way guarantee, either expressly or by implication, the sufficiency of the information for bid purposes.

The boring logs are made available to bidders in order that they may have access to subsurface data identical to that which is possessed by the City, and are not intended as a substitute for personal investigation, interpretation and judgment by the bidders.

COMMONWEALTH OF VIRGINIA
7/29/14
CHAD M. THOMAS
Lic. No. 036962
PROFESSIONAL ENGINEER

Mattern & Craig
CONSULTING ENGINEERS • SURVEYORS
701 FIRST STREET S.W.
ROANOKE, VIRGINIA 24016
(540) 345-9342
FAX (540) 345-7691

MATTERN & CRAIG
ROANOKE, VA
STRUCTURAL ENGINEER

No.	Description	Date

Revisions

BRIDGE REPLACEMENT
KEMPER STREET OVER LYNCHBURG EXPRESSWAY

CITY OF LYNCHBURG, VIRGINIA

ENGINEERING GEOLOGY 3

Designed: MLF
Drawn: RKA
Checked: CMT

Date	Plan No.	Sheet No.
July 2014	1851BR	25 of 25

SUPERVISED BY CITY OF LYNCHBURG
PROJECT MANAGER STEVE CAMPBELL, MATTERN & CRAIG (540)-345-9342
SURVEYED BY MATTERN & CRAIG (540)-345-9342
DESIGNED BY MIKE AGEE, MATTERN & CRAIG

GENERAL NOTES:

1. THE CONSTRUCTION ITEMS ON THIS PROJECT ARE TO BE INSTALLED IN ACCORDANCE WITH THE VIRGINIA DEPARTMENT OF TRANSPORTATION ROAD AND BRIDGE SPECIFICATIONS DATED 2007, VDOT SPECIAL PROVISIONS AND COPIED NOTES, ROAD AND BRIDGE STANDARDS DATED 2008 AND AS AMENDED BY CONTRACT PROVISIONS AND THESE PLANS. THE CONTRACTOR SHALL NOTIFY THE CITY PUBLIC WORKS ENGINEER BEFORE COMMENCING.
2. PAVEMENT MARKINGS ON THIS PROJECT ARE TO BE INSTALLED IN ACCORDANCE WITH SECTION 704 OF THE VIRGINIA DEPARTMENT OF TRANSPORTATION ROAD AND BRIDGE SPECIFICATIONS DATED 2007, AND AS AMENDED BY CONTRACT PROVISIONS AND THESE PLANS.
3. PAVEMENT MARKINGS SHALL CONSIST OF CENTER LINES (4"), LANE LINES (6") AND (4"), DIAGONAL LINES (24"), CROSSWALK LINES (12"), AND STOP LINES (24"), AS DEPICTED ON THE PLAN SHEETS.
4. CENTER LINES AND LANE LINES SHALL BE YELLOW AND WHITE TYPE A PAVEMENT LINE MARKING MATERIAL, RESPECTIVELY.
5. PAVEMENT MARKINGS FOR STOP LINES, DIAGONAL LINES, YIELD LINES, CROSSWALK LINES, AND ARROWS SHALL BE TYPE B, CLASS I PAVEMENT MARKING MATERIAL.
6. UPON COMPLETION OF PROJECT CONTRACTOR TO REMOVE ALL TYPE III BARRICADES AND ASSOCIATED TEMPORARY SIGNS AND RETURN TO OWNER. COORDINATE WITH CITY OF LYNCHBURG.
7. PAINT, LIQUID ASPHALT OR TAPE WILL NOT BE ALLOWED FOR ERADICATING EXISTING PAVEMENT MARKINGS. ERADICATION SHALL BE DONE BY GRINDING ONLY.
8. ALL SIGNS AND SIGN LAYOUTS SHALL CONFORM TO THE LATEST EDITIONS OF THE VIRGINIA WORK AREA PROTECTION MANUAL, MANUAL ON UNIFORM TRAFFIC CONTROL DEVICES, THE VIRGINIA SUPPLEMENT TO THE MUTCD, VDOT ROAD AND BRIDGE STANDARDS AND VDOT ROAD AND BRIDGE SPECIFICATIONS.
9. CONTRACTOR SHALL PROVIDE AND INSTALL ALL PERMANENT, AND TEMPORARY SIGNS AND POSTS. IF SIGNS AND POSTS ARE NOT SET UP AS A PAY ITEM, THEY SHALL BE CONSIDERED INCIDENTAL TO THE PRICE OF OTHER ITEMS.
10. SPACING BETWEEN DOUBLE SOLID YELLOW LINES SHALL BE 4".
11. ALL EXISTING SIGNS ASSOCIATED WITH RAMPS TO BE REMOVED.
12. CONTRACTOR SHALL RELOCATE ALL EXISTING ROUTE NO. SIGNS. RELOCATE SIGN, POST AND PROVIDE CONC. FOUNDATION WHERE REQD. PRICE BID FOR RELOCATING EXISTING SIGNS W/NEW CONC. FOUNDATION SHALL BE INCLUDED IN THE PRICE BID FOR OTHER ITEMS.
13. RELOCATE, REMOVE, MODIFY AND REPLACE EXISTING OVERHEAD SIGNS AS REQUIRED ON LYNCHBURG EXPRESSWAY, ROUTE 29.

TURN LANE ARROWS

TURN ARROWS REQUIRED IN ACCORDANCE WITH THE FOLLOWING, UNLESS OTHERWISE DIRECTED BY THE ENGINEER.

TURN LANE LENGTH

301' OR LONGER: 3 ARROWS
- 1 ARROW LOCATED AT BEGINNING OF FULL WIDTH TURN LANE.
- 1 ARROW LOCATED AT MIDPOINT OF FULL WIDTH TURN LANE.
- 1 ARROW LOCATED 50' BACK FROM STOP BAR.

300' OR LESS: 2 ARROWS
- 1 ARROW LOCATED AT BEGINNING OF FULL WIDTH TURN LANE.
- 1 ARROW LOCATED 50' BACK FROM STOP BAR.

PAVEMENT MARKING SUMMARY / PERMANENT SIGN SUMMARY

SHEET NO.	TYPE B, CLASS VI CONTRAST PAVEMENT LINE MARKING 7"	PAVEMENT LINE MARKING TYPE A 4"	PAVEMENT LINE MARKING TYPE A 6"	PAVEMENT LINE MARKING TYPE A 8"	TYPE B, CLASS I PAVEMENT MESSAGE MARKING ELONGATED ARROW (SINGLE)	PREFORMED 24" THERMOPLASTIC (STOPBAR)	PREFORMED 24" THERMOPLASTIC (DIAGONAL)	PREFORMED 12" THERMOPLASTIC	PREFORMED 12" X 18" THERMOPLASTIC	SIGN PANEL*	SIGN POST STP-1, 2" 10 GA.	SIGN POST STP-1 2 3/16"	SIGN POST STP-1 2 1/2"	CONC. FOUNDATION STP-1	SIGN POST SPD-3	CONC. FOUNDATION SSP-VIA	REMOVE EXISTING SIGN
	L.F.	L.F.	L.F.	L.F.	EA.	L.F.	L.F.	L.F.	EA.	S.F.	L.F.	L.F.	L.F.	EA.	L.F.	EA.	EA.
8(1)	–	2470	–	310	2	60	125	–	–	208	81	10	233	23	–	–	–
8(2)	330	3575	–	360	7	75	75	125	8	325	147	–	111	23	56	4	–
8(3)	–	1155	1420	44	–	–	4	–	–	644	–	43	76	10	77	5	13
8(3A)	–	–	–	–	–	–	–	–	–	369	–	–	–	–	54	4	3
1G(3A)	–	–	–	–	–	–	–	–	–	8	–	–	–	–	–	–	–
TOTAL	330	7465	1420	714	9	135	204	125	8	1554	228	53	420	56	187	13	16

*COST OF MOUNTING SIGNS S-10, S-11 AND S-15 SHALL BE INCLUDED IN PRICE BID FOR SIGN PANEL.

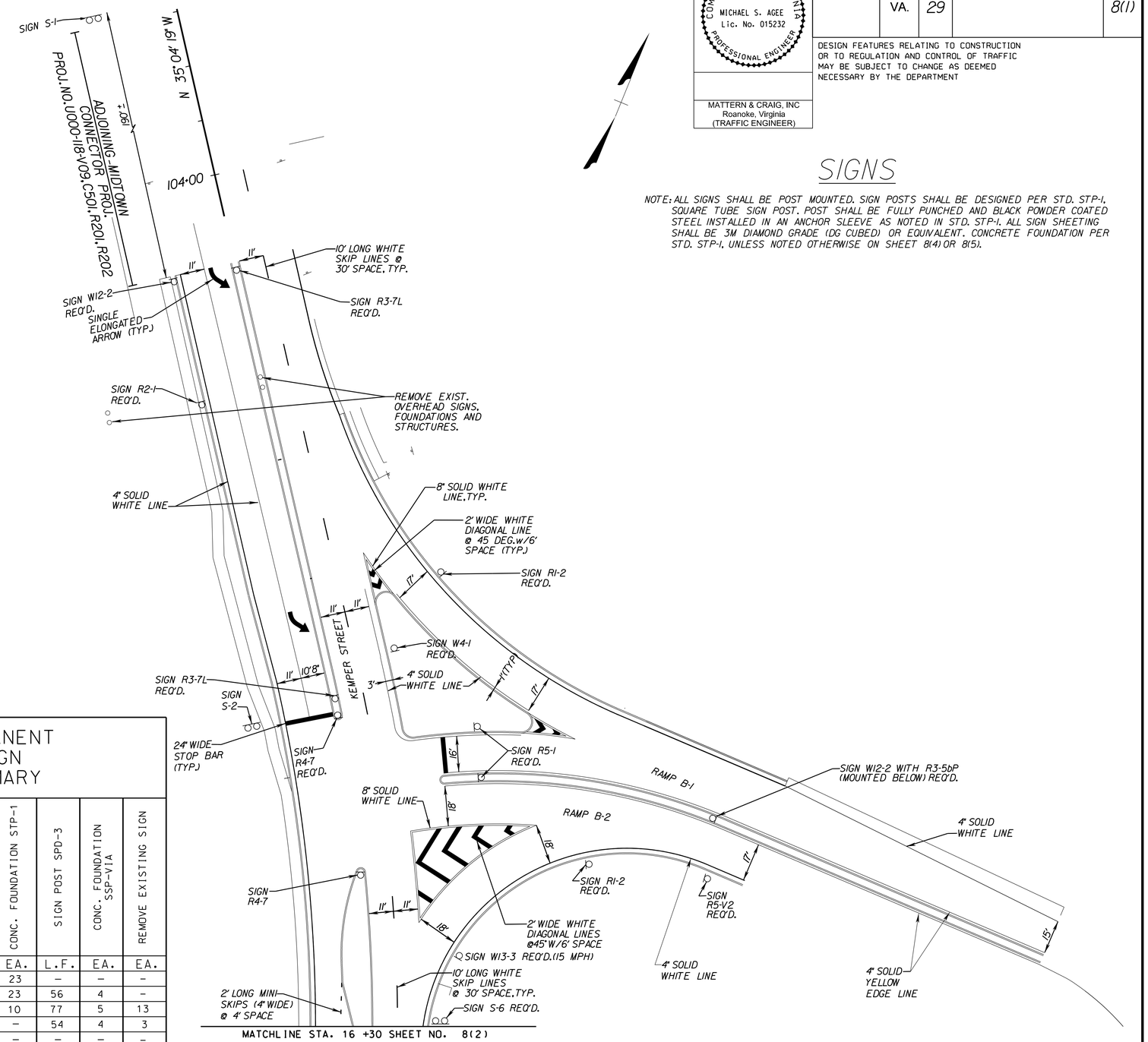

COMMONWEALTH OF VIRGINIA
MICHAEL S. AGEE
Lic. No. 015232
PROFESSIONAL ENGINEER

MATTERN & CRAIG, INC
Roanoke, Virginia
(TRAFFIC ENGINEER)

REVISED	STATE	STATE ROUTE	STATE PROJECT	SHEET NO.
	VA.	29	U000-118-204, C-501	8(1)

DESIGN FEATURES RELATING TO CONSTRUCTION OR TO REGULATION AND CONTROL OF TRAFFIC MAY BE SUBJECT TO CHANGE AS DEEMED NECESSARY BY THE DEPARTMENT

SIGNS

NOTE: ALL SIGNS SHALL BE POST MOUNTED. SIGN POSTS SHALL BE DESIGNED PER STD. STP-1, SQUARE TUBE SIGN POST. POST SHALL BE FULLY PUNCHED AND BLACK POWDER COATED STEEL INSTALLED IN AN ANCHOR SLEEVE AS NOTED IN STD. STP-1. ALL SIGN SHEETING SHALL BE 3M DIAMOND GRADE (DG CUBED) OR EQUIVALENT. CONCRETE FOUNDATION PER STD. STP-1, UNLESS NOTED OTHERWISE ON SHEET 8(4) OR 8(5).

SUPERVISED BY CITY OF LYNCHBURG
PROJECT MANAGER STEVE CAMPBELL,MATTERN & CRAIG (540)-345-9342
SURVEYED BY MATTERN & CRAIG (540)-345-9342
DESIGNED BY MIKE AGEE,MATTERN & CRAIG

COMMONWEALTH OF VIRGINIA
MICHAEL S. AGEE
Lic. No. 015232
PROFESSIONAL ENGINEER

MATTERN & CRAIG, INC
Roanoke, Virginia
(TRAFFIC ENGINEER)

REVISED	STATE	STATE ROUTE	STATE PROJECT	SHEET NO.
	VA.	29	U000-118-204, C-501	8(2)

DESIGN FEATURES RELATING TO CONSTRUCTION OR TO REGULATION AND CONTROL OF TRAFFIC MAY BE SUBJECT TO CHANGE AS DEEMED NECESSARY BY THE DEPARTMENT

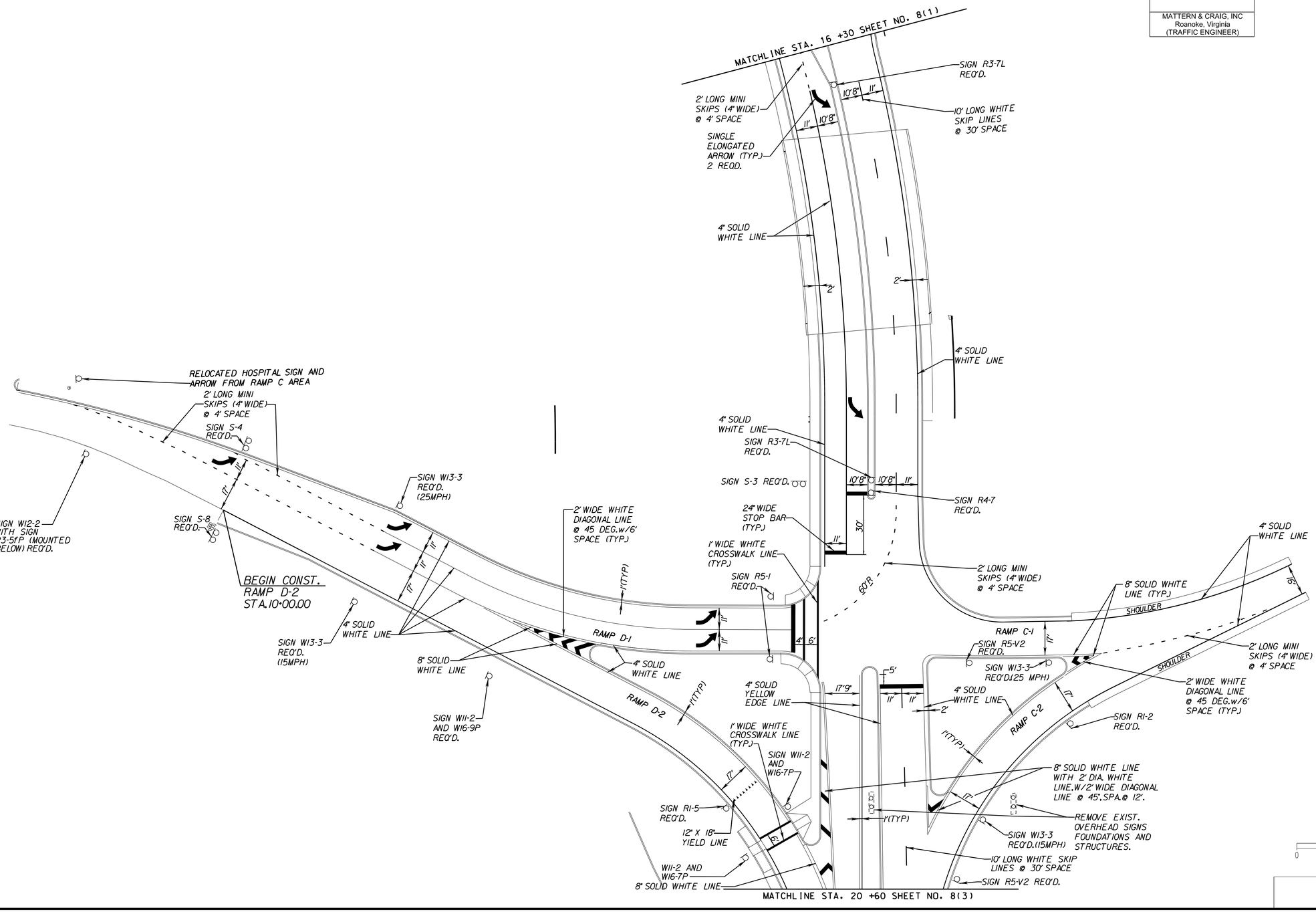

PROJECT	SHEET NO.
U000-118-204	8(2)

SUPERVISED BY CITY OF LYNCHBURG
PROJECT MANAGER STEVE CAMPBELL MATTERN & CRAIG (540)-345-9342
SURVEYED BY MATTERN & CRAIG (540)-345-9342
DESIGNED BY MIKE AGEE MATTERN & CRAIG

REVISED	STATE	STATE ROUTE	STATE PROJECT	SHEET NO.
	VA.	29	U000-118-204, C-501	8(3)

COMMONWEALTH OF VIRGINIA
MICHAEL S. AGEE
Lic. No. 015232
PROFESSIONAL ENGINEER

MATTERN & CRAIG, INC
Roanoke, Virginia
(TRAFFIC ENGINEER)

DESIGN FEATURES RELATING TO CONSTRUCTION OR TO REGULATION AND CONTROL OF TRAFFIC MAY BE SUBJECT TO CHANGE AS DEEMED NECESSARY BY THE DEPARTMENT

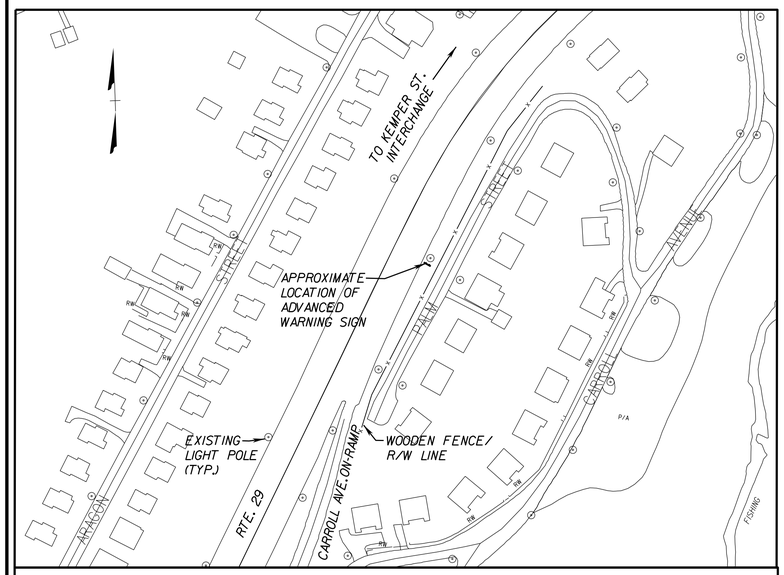

ADVANCED WARNING SIGN LOCATION

NO SCALE

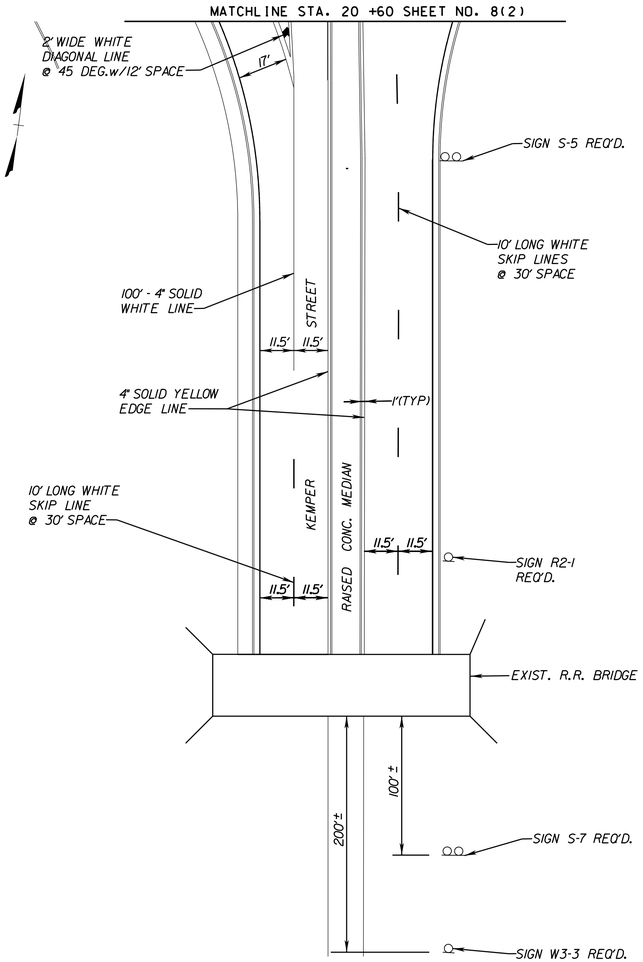

DENOTES DEMOLITION OF PAVEMENT

RT 29 ACCEL.LANE

NOTE 1: REPLACE EXIST.POST MOUNTED SIGN (EAST BUS. 460 AND SOUTH BUS. 501) LOCATED 650'± SOUTH OF EXIST.OVERHEAD SIGN BRIDGE WITH PROP.SIGN S-9.

NOTE 2: REMOVE FROM OVERHEAD SIGN BRIDGE THE MIDDLE SIGN (SOUTH 221, WEST BUS. 460 AND NORTH BUS. 501) AND REPLACE EXIST. RIGHT SIGN (EAST. BUS. 460 SOUTH BUS. 501) WITH PROP.SIGN S-10.

NOTE 3: REPLACE EXIST.EXIT NUMBER PLAQUE "EXITS 3B-A ON ADVANCE GUIDE SIGN ½ MILE WEST OF KEMPER ST./RTE.29 INTERCHANGE WITH PROP.SIGN S-15.

NOTE 4: INSTALL POST MOUNTED ADVANCED WARNING SIGNS S-16 AND S-17 (TOP/BOTTOM) 1200' FROM RAMP D ON THE RIGHT SHOULDER OF ROUTE 29 JUST NORTH OF THE CARROLL STREET INTERCHANGE ON-RAMP. PROVIDE STD. FB-2 FLASHING LIGHTS. MOUNT FLASHING LIGHTS ON POST ABOVE SIGN S-16. SEE LOCATION THIS SHEET. COORDINATE SPECIFIC SIGN LOCATION WITH CITY. SEE SH.9(3) FOR ADDITIONAL INFORMATION.

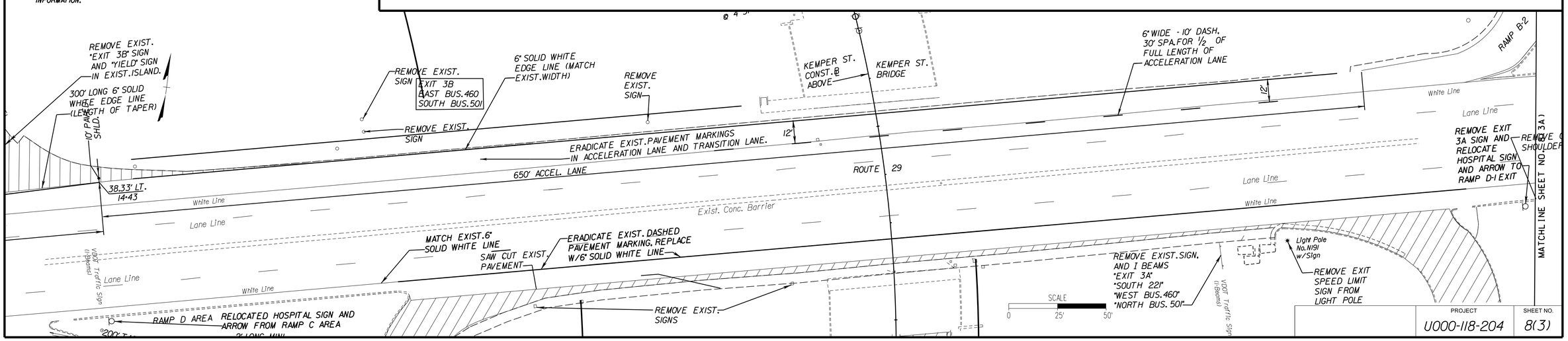

PROJECT	SHEET NO.
U000-118-204	8(3)

SUPERVISED BY CITY OF LYNCHBURG
PROJECT MANAGER STEVE CAMPBELL,MATTERN & CRAIG (540)-345-9342
SURVEYED BY MATTERN & CRAIG (540)-345-9342
DESIGNED BY MIKE AGEE,MATTERN & CRAIG

COMMONWEALTH OF VIRGINIA
MICHAEL S. AGEE
Lic. No. 015232
PROFESSIONAL ENGINEER

MATTERN & CRAIG, INC
Roanoke, Virginia
(TRAFFIC ENGINEER)

REVISED	STATE	STATE		SHEET NO.
		ROUTE	PROJECT	
	VA.	29	U000-118-204,C-501	8(3A)

DESIGN FEATURES RELATING TO CONSTRUCTION OR TO REGULATION AND CONTROL OF TRAFFIC MAY BE SUBJECT TO CHANGE AS DEEMED NECESSARY BY THE DEPARTMENT

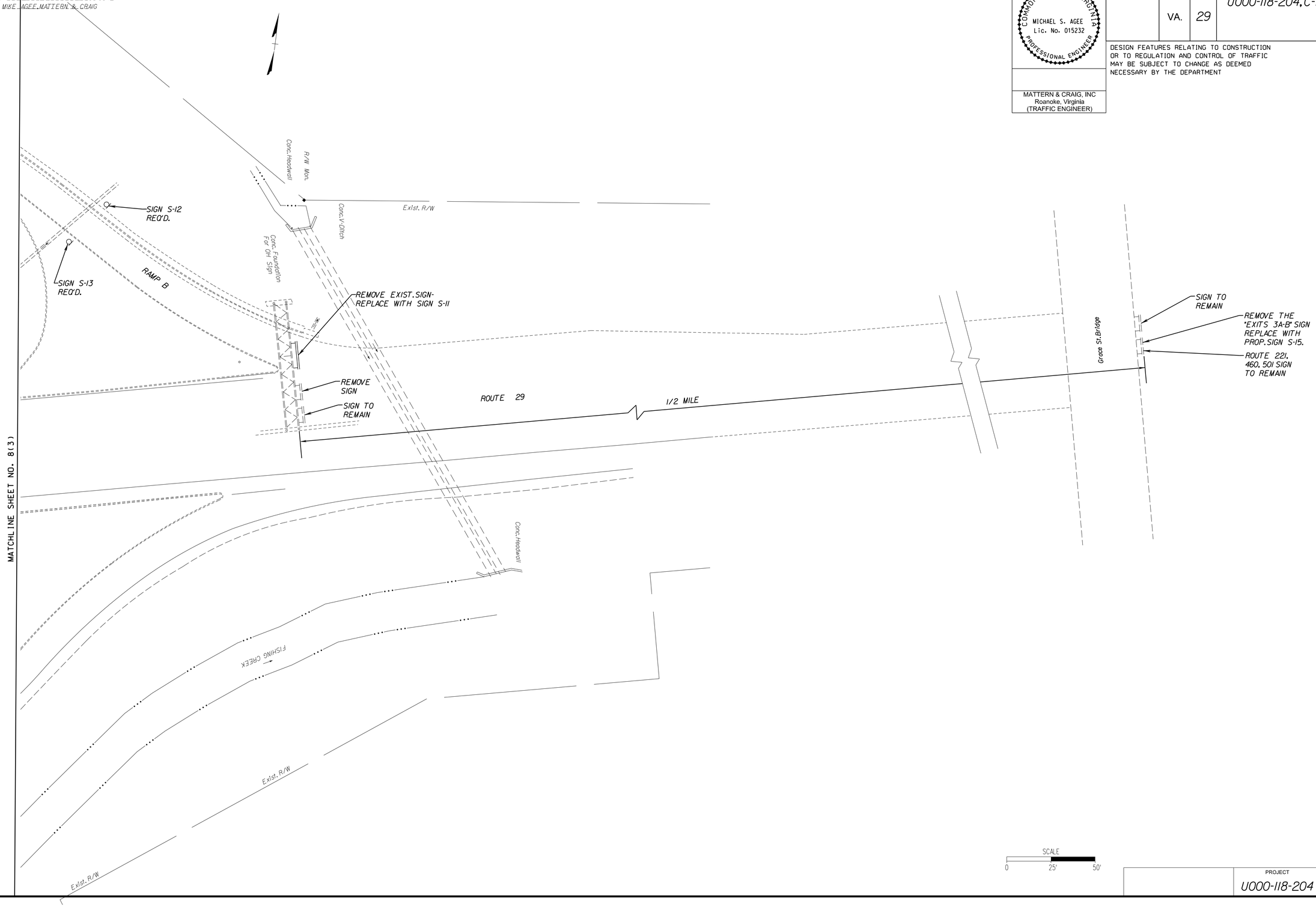

PROJECT	SHEET NO.
U000-118-204	8(3A)

SUPERVISED BY CITY OF LYNCHBURG
PROJECT MANAGER STEVE CAMPBELL MATTERN & CRAIG (540)-345-9342
SURVEYED BY MATTERN & CRAIG (540)-345-9342
DESIGNED BY MIKE AGEE MATTERN & CRAIG

COMMONWEALTH OF VIRGINIA
MICHAEL S. AGEE
Lic. No. 015232
PROFESSIONAL ENGINEER

MATTERN & CRAIG, INC
Roanoke, Virginia
(TRAFFIC ENGINEER)

REVISED	STATE	STATE ROUTE	STATE PROJECT	SHEET NO.
	VA.	29	U000-118-204, C-501	8(4)

DESIGN FEATURES RELATING TO CONSTRUCTION OR TO REGULATION AND CONTROL OF TRAFFIC MAY BE SUBJECT TO CHANGE AS DEEMED NECESSARY BY THE DEPARTMENT

SIGN SCHEDULE

TEXT NO.	TEXT	SIGN NO.	SIGN STRUCT. STD.	PANEL SIZE W	PANEL SIZE H	LETTER TYPE	COLOR COMB.	STD. NO.	QUANTITY	SIGN AREA S.F. EA.	REMARKS
1		R1-2	TYPE A STP-1 2½"	48"	48"	STD.	C-20	R1-2	3	8	
2		W4-1	TYPE A STP-1 2½"	36"	36"	STD.	C-8	W4-1	1	9	
3		R4-7	TYPE A STP-1 2"	24"	30"	STD.	C-1	R4-7	3	5	
4	RAMP 15 MPH	W13-3	TYPE A STP-1 2½"	36"	48"	STD.	C-1	W13-3	3	12	
5	RAMP 25 MPH	W13-3	TYPE A STP-1 2½"	36"	48"	STD.	C-1	W13-3	2	12	
6	DO NOT ENTER	R5-1	TYPE A STP-1 2"	30"	30"	STD.	C-10	R5-1	4	6.25	
7	14'-3"	W12-2	TYPE A STP-1 2½"	36"	36"	STD.	C-8	W12-2	3	9	TYPE C MOUNTING USED IN CONJUNCTION WITH SIGN R3-5FP OR R3-5bP
8	NO PEDESTRIANS, BICYCLES, MOPEDS, ANIMALS, SELF-PROPELLED MACHINERY, OR EQUIPMENT	R5-V2	TYPE A STP-1 2½"	36"	48"	STD.	C-1	R5-V2	3	12	

NOTE: ALL SIGNS THIS SHEET STD.PRS-1.

TEXT NO.	TEXT	SIGN NO.	SIGN STRUCT. STD.	PANEL SIZE W	PANEL SIZE H	LETTER TYPE	COLOR COMB.	STD. NO.	QUANTITY	SIGN AREA S.F. EA.	REMARKS
9		W11-2	TYPE C STP-1 2" TWO-POST W=2.5'	36"	36"	STD.	C-8	W11-2	3	9	
10		W16-7P	TYPE C STP-1 2" TWO-POST W=2.5'	30"	18"	STD.	C-8	W16-7P	2	3.75	MOUNT BELOW SIGN W11-2, SPD-5 POST MOUNTING
11	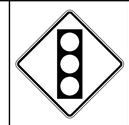	W3-3	TYPE A STP-1 2½"	36"	36"	STD.	STD.	W3-3	1	9	
12	AHEAD	W16-9P	TYPE C STP-1 2" TWO-POST W=2.5'	30"	18"	STD.	C-8	W16-9P	1	3.75	MOUNT BELOW SIGN W11-2, SPD-5 POST MOUNTING
13	SPEED LIMIT 35	R2-1	TYPE A STP-1 2 3/16"	30"	36"	STD.	C-1	R2-1	2	7.5	
14	YIELD HERE TO	R1-5	TYPE A STP-1 2½"	36"	36"	STD.	C-1	R1-5	1	9	
15	LEFT LANE MUST TURN LEFT	R3-7L	TYPE A STP-1 2"	30"	30"	STD.	C-1	R3-7L	4	6.25	
16	RIGHT LANE	R3-5rP	TYPE C STP-1 2" TWO-POST W=2.5'	30"	12"	STD.	C-8	R3-5rP	1	2.5	MOUNT BELOW SIGN W12-2, SPD-5 POST MOUNTING
17	LEFT LANE	R3-5bP	TYPE C STP-1 2" TWO-POST W=2.5'	30"	12"	STD.	C-8	R3-5bP	1	2.5	MOUNT BELOW SIGN W12-2, SPD-5 POST MOUNTING

TRAFFIC CONTROL DEVICE PLANS
SIGNING AND PAVEMENT MARKINGS
SIGN SCHEDULE

PROJECT	SHEET NO.
U000-118-204	8(4)

SUPERVISED BY CITY OF LYNCHBURG
PROJECT MANAGER STEVE CAMPBELL MATTERN & CRAIG (540)-345-9342
SURVEYED BY MATTERN & CRAIG (540)-345-9342
DESIGNED BY MIKE AGEE MATTERN & CRAIG

COMMONWEALTH OF VIRGINIA
MICHAEL S. AGEE
Lic. No. 015232
PROFESSIONAL ENGINEER

MATTERN & CRAIG, INC
Roanoke, Virginia
(TRAFFIC ENGINEER)

REVISED	STATE	STATE ROUTE	STATE PROJECT	SHEET NO.
	VA.	29	U000-118-204, C-501	8(5)

DESIGN FEATURES RELATING TO CONSTRUCTION OR TO REGULATION AND CONTROL OF TRAFFIC MAY BE SUBJECT TO CHANGE AS DEEMED NECESSARY BY THE DEPARTMENT

SIGN SCHEDULE

TEXT NO.	TEXT	SIGN NO.	SIGN STRUCT. STD.	PANEL SIZE W	PANEL SIZE H	LETTER TYPE	COLOR COMB.	STD. NO.	QUANTITY	SIGN AREA S.F. EA.	REMARKS
16	SEE SH.8(6) FOR SIGN LAYOUT	S-1	TYPE S STP-1 2 3/16" & 2 1/2"- THREE-POST W=3.9'	78"	78"	-	-	SPECIAL	1	42.25	SEE SH.8(6) FOR LETTER TYPE AND COLOR COMB.
17	SEE SH.8(6) FOR SIGN LAYOUT	S-2	TYPE S STP-1 2 3/16" & 2 1/2"- TWO-POST W=3.6'	72"	60"	-	-	SPECIAL	1	30	SEE SH.8(6) FOR LETTER TYPE AND COLOR COMB.
18	SEE SH.8(6) FOR SIGN LAYOUT	S-3	TYPE S STP-1 2 3/16" & 2 1/2"- TWO-POST W=4.5'	90"	60"	-	-	SPECIAL	1	37.5	SEE SH.8(6) FOR LETTER TYPE AND COLOR COMB.
19	SEE SH.8(6) FOR SIGN LAYOUT	S-4	SPD-3	120"	84"	-	-	SPECIAL	1	70	SEE SH.8(6) FOR LETTER TYPE AND COLOR COMB.
20	SEE SH.8(7) FOR SIGN LAYOUT	S-5	TYPE S STP-1 2 3/16" & 2 1/2"- TWO-POST W=4.5'	90"	60"	-	-	SPECIAL	1	37.5	SEE SH.8(7) FOR LETTER TYPE AND COLOR COMB.
21	SEE SH.8(7) FOR SIGN LAYOUT	S-6	TYPE S STP-1 2 1/2"- THREE-POST W=3.6'	72"	60"	-	-	SPECIAL	1	30	SEE SH.8(7) FOR LETTER TYPE AND COLOR COMB.

TEXT NO.	TEXT	SIGN NO.	SIGN STRUCT. STD.	PANEL SIZE W	PANEL SIZE H	LETTER TYPE	COLOR COMB.	STD. NO.	QUANTITY	SIGN AREA S.F. EA.	REMARKS
22	SEE SH.8(7) FOR SIGN LAYOUT	S-7	TYPE S STP-1 2 3/16" & 2 1/2"- THREE-POST W=3.9'	78"	78"	-	-	SPECIAL	1	42.25	SEE SH.8(7) FOR LETTER TYPE AND COLOR COMB.
23	SEE SH.8(7) FOR SIGN LAYOUT	S-8	SPD-3	84"	84"	-	-	SPECIAL	1	49	SEE SH.8(7) FOR LETTER TYPE AND COLOR COMB.
24	SEE SH.8(8) FOR SIGN LAYOUT	S-9	SPD-3	-	-	-	-	SPECIAL	1	181.25	SEE SH.8(8) FOR PANEL SIZE, LETTER TYPE AND COLOR COMB.
25	SEE SH.8(8) FOR SIGN LAYOUT	S-10/ S-11	OSS-1 SPD-1	-	-	-	-	SPECIAL	1	236.5	SEE SH.8(8) FOR PANEL SIZE, LETTER TYPE AND COLOR COMB.
26	SEE SH.8(8) FOR SIGN LAYOUT	S-12	SPD-3	120"	72"	-	-	SPECIAL	1	60	SEE SH.8(8) FOR LETTER TYPE AND COLOR COMB.
27	SEE SH.8(8) FOR SIGN LAYOUT	S-13	SPD-3	84"	84"	-	-	SPECIAL	1	49	SEE SH.8(8) FOR LETTER TYPE AND COLOR COMB.
28	SEE SH.8(9) FOR SIGN LAYOUT	S-14	TYPE S STP-1 2 3/16"- THREE-POST W=3.3'	66"	48"	-	-	SPECIAL	1	22	SEE SH.8(9) FOR LETTER TYPE AND COLOR COMB.
29	SEE SH.8(9) FOR SIGN LAYOUT	S-15	OSS-1 SPD-1	114"	30"	-	-	SPECIAL	1	23.75	SEE SH.8(9) FOR LETTER TYPE AND COLOR COMB.
30	SEE SH.8(9) FOR SIGN LAYOUT	S-16	SPD-3	144"	60"	-	-	SPECIAL	1	60	SEE SH.8(9) FOR LETTER TYPE AND COLOR COMB. MOUNT ABOVE S-17
31	SEE SH.8(9) FOR SIGN LAYOUT	S-17	SPD-3	144"	24"	-	-	SPECIAL	1	24	SEE SH.8(9) FOR LETTER TYPE AND COLOR COMB. MOUNT BELOW S-16

TRAFFIC CONTROL DEVICE PLANS
SIGNING AND PAVEMENT MARKINGS
SIGN SCHEDULE

PROJECT	SHEET NO.
U000-118-204	8(5)