PRINCETON CIRCLE WATER LINE, SANITARY SEWER & STORM SEWER REPLACEMENT PLAN

LEGEND

	ABANDONED OR DEMOLISH
500	CONTOUR (INTERVAL AS INDICATED ON SITE PLAN)
	EC-2 LINER
	EDGE OF EXISTING PAVEMENT
X	FENCE
GAS	GAS LINE
OHC	OVERHEAD CABLE LINE
OHE	OVERHEAD ELECTRIC LINE
OHT	OVERHEAD TELEPHONE LINE
PL	PROPERTY LINE
R/W	RIGHT-OF-WAY
SAN	SANITARY SEWER
+ 499.50	SPOT ELEVATION
SS	STORM SEWER
UGE	UNDERGROUND ELECTRICAL LINE
UGT	UNDERGROUND TELEPHONE LINE
W	WATER LINE
	WOOD LINE
	UTILITY EASEMENTS
	DRAINAGE EASEMENT
	CONCRETE
	NEW PAVEMENT
	STONE
	BENCHMARK
WM	DOUBLE WATER METER SETTING
	DROP INLET
FH	FIRE HYDRANT
IPF	IRON PIN FOUND
IPS	IRON PIN SET
	LIGHT POLE
	POWER POLE
SAN	SAN. SEWER MANHOLE
CO	SANITARY CLEAN OUT
	TELEPHONE POLE WITH GUY WIRE & ANCHOR
	TREE
WM	WATER METER
WV	WATER VALVE
ARV	AIR RELEASE VALVE
C F	CUT / FILL LINES
C2-1	STRUCTURE NUMBER 1 PLAN C-2
	TEMPORARY CONSTRUCTION AND GRADING EASEMENT DESIGNATION
	PERMANENT SLOPE AND DRAINAGE EASEMENT DESIGNATION

NOTE: 1. THE SIZE OF SYMBOLS MAY VARY FROM THOSE SHOWN.
2. ALL ABBREVIATIONS AND SYMBOLS SHOWN MAY NOT BE USED.

ABBREVIATIONS

ADT	AVERAGE DAILY TRAFFIC	NTS	NOT TO SCALE
ARV	AIR RELEASE VALVE	PL	PROPERTY LINE
BC	BACK OF CURB	PC	POINT OF CURVATURE
BM	BENCH MARK	PI	POINT OF INTERSECTION
CD	COMBINATION UNDERDRAIN	PT	POINT OF TANGENT
CG	CURB & GUTTER	POB	POINT OF BEGINNING
℄	CENTER LINE	POE	POINT OF ENDING
CMP	CORRUGATED METAL PIPE	PRC	POINT OF REVERSE CURVE
CO	CLEAN OUT	PVC	POINT OF VERTICAL CURVATURE
CP	CONTROL POINT	PVI	POINT OF VERTICAL INTERSECTION
CY	CUBIC YARDS	PVT	POINT OF VERTICAL TANGENT
DIA	DIAMETER	PUE	PUBLIC UTILITY EASEMENT
DIP	DUCTILE IRON PIPE	PVC	POLYVINYL CHLORIDE PIPE
EL	ELEVATION	RCP	REINFORCED CONCRETE PIPE
ELEC	ELECTRIC	RT	RIGHT
EVT	EVENT POINT	R/W	RIGHT OF WAY
EX	EXISTING	SAN	SANITARY
FF	FINISHED FLOOR	SD	SIGHT DISTANCE
FH	FIRE HYDRANT ASSEMBLY	STA	STATION
GM	GAS METER	STD	STANDARD
GV	GAS VALVE	SY	SQUARE YARDS
INV	INVERT	TYP	TYPICAL
IPF	IRON PIN FOUND	UD	UNDERDRAIN
IPS	IRON PIN SET	UON	UNLESS OTHERWISE NOTED
LT	LEFT	VC	VERTICAL CURVE LENGTH
MH	MANHOLE	VPD	VEHICLES PER DAY
ML	MAINLINE	VSD	VERTICAL SIGHT DISTANCE
NIC	NOT IN CONTRACT	WM	WATER METER
		WV	WATER VALVE

UTILITY CONTACTS

WATER & SEWER:	CITY OF LYNCHBURG UTILITIES DEPARTMENT ATTN: HARRY DOSS 525 TAYLOR STREET LYNCHBURG, VA. 24501 (434)455-4271	ELECTRICITY:	AMERICAN ELECTRIC POWER 4001 MAYFLOWER DRIVE LYNCHBURG, VA 24501 (434) 522-4281
		GAS:	COLUMBIA GAS OF VIRGINIA INC. CUSTOMER SERVICE RICHMOND VA 23236 1-888-460-4332
TELEPHONE:	VERIZON VIRGINIA INC. ENGINEERING DEPARTMENT 553 LEESVILLE ROAD LYNCHBURG, VA 24502 (434) 237-9522 REPAIR: 1-888-663-0363	CABLE:	COMCAST DIGITAL CABLE 2820 LINKHORNE DRIVE LYNCHBURG, VA 24588 (888) 266-2278

NOTE: CONTRACTOR SHALL VERIFY CONTACT INFORMATION FOR EMERGENCY REPAIR SERVICE AND INSTALLATION, PRIOR TO ANY CONSTRUCTION ACTIVITES.

CITY OF LYNCHBURG
FEBRUARY 28, 2013
REVISED MAY 6, 2014

City of Lynchburg Project #12024-W

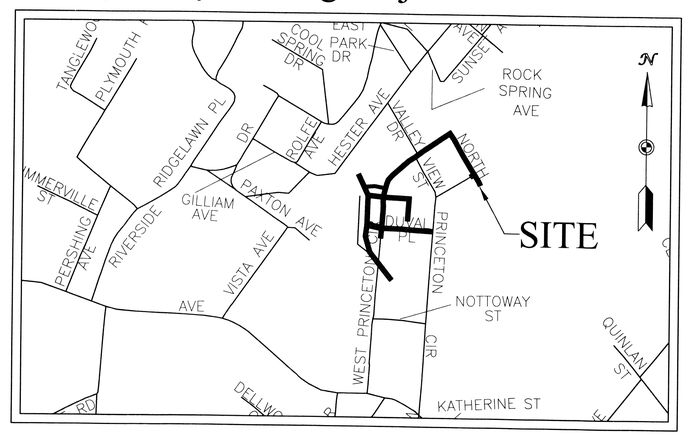

VICINITY MAP
NTS

INDEX OF SHEETS

SHEET NO.	DRAWING NO.	TITLE
1 OF 15	CS1	COVER SHEET
2 OF 15	G1	EXISTING CONDITIONS
3 OF 15	C1	PRINCETON CIRCLE WATER LINE PLAN & PROFILE (STA 10+00 TO 17+50)
4 OF 15	C2	PRINCETON CIRCLE WATER LINE PLAN (STA 17+50 TO 24+12)
5 OF 15	C3	PRINCETON CIRCLE WATER LINE PROFILE (STA 17+50 TO 24+12)
6 OF 15	C4	DUVAL PL. & NORTH PRINCETON CIR. WATER LINE PLAN & PROFILE
7 OF 15	C5	SANITARY SEWER PLAN & PROFILE (STA 50+00 TO 57+00)
8 OF 15	C6	SANITARY SEWER PLAN & PROFILE (STA. 57+00 TO 60+42)
9 OF 15	C7	SANITARY SEWER PLAN & PROFILE (STA. 70+00 TO 72+59)
10 OF 15	C8	SANITARY SEWER PLAN & PROFILE (STA. 80+00 TO 84+37)
11 OF 15	C9	SANITARY & STORM SEWER PLAN & PROFILES
12 OF 15	EC1	EROSION & SEDIMENT CONTROL PLAN
13 OF 15	EC2	EROSION & SEDIMENT CONTROL NARRATIVE
14 OF 15	D1	WATERLINE DETAILS
15 OF 15	D2	SANITARY SEWER & STORM DETAILS

ENGINEER: WARNER WHITE ENGINEERING PARTNERS, INC.
118 CORNERSTONE STREET
LYNCHBURG, VIRGINIA 24502

CONTACT: JAMEY L. WHITE, P.E.
(434) 534-3201

OWNER: CITY OF LYNCHBURG
CONTACT: SCOTT PARKINS, PE
(434) 455-4248

PROJECT NARRATIVE:

THE PURPOSE OF THIS PLAN IS TO REPLACE THE EXISTING 2" WATER MAIN ALONG NORTH & WEST PRINCETON CIRCLE AND DUVAL PLACE WITH APPROXIMATELY 1,581 LINEAR FEET OF 8" WATER MAIN AND 208 LINEAR FEET OF 6" WATER MAIN. THIS PLAN WILL ALSO REPLACE APPROXIMATELY 1,602 LINEAR FEET OF EXISTING SANITARY SEWER MAIN AND 267 LINEAR FEET OF STORM SEWER THAT SERVES THE RESIDENTS OF WEST PRINCETON CIRCLE AND DUVAL PLACE. APPROXIMATELY 440 L.F. OF EXISTING SANITARY SEWER WILL REMAIN IN USE AND WILL BE LINED.

THE EXISTING TOPOGRAPHY IS BUILT FROM DATA FROM A FIELD SURVEY BY ACTUAL SURVEYORS, PLLC, COMPLETED UNDER THE DIRECT AND RESPONSIBLE CHARGE OF M. TAZE CROWDER L.S. THE IMAGERY AND OR ORIGINAL DATA WAS OBTAINED ON NOVEMBER 2012 & SEPTEMBER 2013 AND THIS PLAT, MAP OR DIGITAL GEOSPATIAL DATA INCLUDING METADATA MEETS MINIMUM ACCURACY STANDARDS UNLESS OTHERWISE NOTED.

GENERAL NOTES:

1. ALL CONSTRUCTION SHALL BE PERFORMED IN ACCORDANCE WITH THE CITY OF LYNCHBURG MANUAL OF SPECIFICATIONS AND STANDARD DETAILS, LATEST REVISION. SITE SPECIFICATIONS AND DETAILS NOT COVERED BY THE CITY MANUAL SHALL CONFORM TO THE VIRGINIA DEPARTMENT OF TRANSPORTATION'S ROAD AND BRIDGE 2007 SPECIFICATIONS AND 2008 STANDARDS, AND VIRGINIA DEPARTMENT OF HEALTH REGULATIONS.
2. CONTACT MISS UTILITY 1-800-552-7001 FORTY-EIGHT (48) HOURS PRIOR TO ANY GRADING OR DIGGING TO HAVE UNDERGROUND UTILITIES MARKED. THIS PLAN DOES NOT GUARANTEE THE EXISTENCE, NON EXISTENCE, SIZE TYPE, LOCATION, ALIGNMENT OR DEPTH OF ANY OR ALL UNDERGROUND UTILITIES OR OTHER FACILITIES. THE CONTRACTOR SHALL PERFORM WHATEVER TEST EXCAVATION OR OTHER INVESTIGATION NECESSARY TO VERIFY TIE-IN INVERTS, LOCATIONS AND CLEARANCES, AND SHALL REPORT IMMEDIATELY ANY DISCREPANCIES. UTILITY COMPANIES SHALL BE NOTIFIED IN ADVANCE OF ANY EXCAVATION IN THE PROXIMITY OF THEIR UTILITIES. THE CONTRACTOR SHALL BE RESPONSIBLE FOR REPAIRING AT HIS EXPENSE ANY EXISTING UTILITIES DAMAGED DURING CONSTRUCTION, INCLUDING THE EXISTING 2" WATER MAIN.
3. CONTACT GREG BLAIR AT (434) 455-4141, A MINIMUM SEVENTY-TWO (72) HOURS PRIOR TO ANY GRADING, DIGGING, OR SERVICE INTERRUPTION FOR PUBLIC UTILITIES.
4. EXISTING WATERLINE FEATURES, THAT ARE LABELED "TO BE REMOVED", SHALL BE REMOVED AFTER THE NEW WATERLINE IS INSTALLED, INSPECTED, DISINFECTED, APPROVED BY THE CITY'S CONSTRUCTION COORDINATOR, AND IS PUT IN SERVICE. ITEMS REMOVED SHALL BECOME PROPERTY OF THE CONTRACTOR.
5. EXISTING WATERLINE VALVES, THAT ARE LABELED "TO BE CLOSED AND ABANDONED", SHALL REMAIN OPEN UNTIL THE NEW WATERLINE IS INSTALLED, INSPECTED, DISINFECTED, APPROVED BY THE CITYS CONSTRUCTION COORDINATOR, AND PUT IN SERVICE. THE VALVE SHALL THEN BE CLOSED AND THE VALVE BOX SHALL BE REMOVED IF THE VALVE BOX IS IN A GRASSED AREA OR FILLED WITH CONCRETE IF THE VALVE BOX IS LOCATED IN THE STREET OR SIDEWALK. THE COST ASSOCIATED SHALL BE INCLUDED IN THE PRICE FOR THE WATERLINE.
6. CONTRACTOR SHALL USE 1/2" UNDERSIZED CUTTER WHEN CONNECTING TAPPING SLEEVE TO EXISTING WATERLINE WHEN THE LINES ARE THE SAME SIZE.
7. CONTRACTOR SHALL SUBMIT A TRAFFIC CONTROL PLAN TO THE CITY TRANSPORTATION ENGINEER TWO WEEKS PRIOR TO CONSTRUCTION.
8. ALL DISTURBED AREAS SHALL BE RETURNED TO LIKE OR BETTER CONDITIONS WHETHER THEY ARE GRASSED, LANDSCAPED, GRAVEL, OR OTHER. CONTRACTOR SHALL REPLACE ANY CULVERTS DAMAGED BY CONSTRUCTION. ALL DISTURBED AREAS SHALL BE GRADED TO DRAIN.
9. COMPACT LAYERS OF FILL TO 100 PERCENT BY ASTM D 698 (STANDARD PROCTOR) BENEATH AND WITHIN 25 FEET OF BUILDINGS, STRUCTURES AND WITHIN STORMWATER POND EMBANKMENTS. COMPACT LAYERS OF FILL TO 95 PERCENT BY ASTM D 698 (STANDARD PROCTOR) WITHIN CITY'S RIGHT-OF-WAY, PAVEMENTS, WALKS, AND ROAD SHOULDERS. IN OTHER UNPAVED AREAS, COMPACT TO 90 PERCENT BY ASTM D 698 (STANDARD PROCTOR). IF THE DENSITY OF THE ADJACENT SOIL IS MORE THAN THE DENSITY SPECIFIED, THEN COMPACT TO A DENSITY NOT LESS THAN THE DENSITY OF THE ADJACENT SOIL. COMPACTION TESTS ARE REQUIRED AT A MINIMUM OF EVERY 300 LINEAR FOOT OF TRENCH. PAYMENT FOR COMPACTION TEST SHALL BE PER EACH INCLUDING LAB WORK AND PROCTORS AS A LINE ITEM ON THE BID FORM.
10. ALL JOINTS BETWEEN THRUST BLOCKS AND PLUGS SHALL BE RESTRAINED JOINTS, MEGALUG OR APPROVED EQUAL.
11. THE CONTRACTOR SHALL TRANSFER THE EXISTING METER INTO THE NEW BOX, REMOVE EXISTING BOX, AND CRIMP SERVICE. THE CITY SHALL PROVIDE ALL METERS. THE CONTRACTOR SHALL PROVIDE THE METER BOXES & COMPONENTS FOR THE SERVICE CONNECTIONS.
12. WATER SERVICE SHALL BE BORED UNDER EXISTING ROADWAY WHERE APPLICABLE.
13. POSITIVE AND ADEQUATE ROADSIDE DRAINAGE SHALL BE RESTORED BY THE CONTRACTOR PRIOR TO RELEASE OF PAYMENT AND PERFORMANCE BONDS. WRITTEN ACCEPTANCE OF THE DRAINAGE FACILITIES MUST BE PROVIDED BY THE EROSION AND SEDIMENT CONTROL ADMINISTRATOR PRIOR TO RELEASE OF BONDS. ESTABLISHMENT OF PERMANENT STABILIZATION IS INCLUDED IN THIS REQUIREMENT.
14. ALL EXISTING WATERLINE REPLACED BY THESE PLANS SHALL BE ABANDONED IN PLACE.
15. PIPE LENGTHS ARE MEASURED HORIZONTALLY FROM STRUCTURE CENTER TO STRUCTURE CENTER. PIPE SLOPES ARE ALSO MEASURED FROM STRUCTURE CENTER TO STRUCTURE CENTER.
16. ALL DRAINAGE STRUCTURES INVERTS TO BE SHAPED IN ACCORDANCE WITH VDOT STANDARD IS-1.
17. CONTRACTOR SHALL BE RESPONSIBLE FOR LOCATING, UNCOVERING, AND ADJUSTING ALL VALVE BOXES, MANHOLES, ETC. TO FINAL PAVEMENT AND FINISH GRADE.

15. ALL EXCAVATION SHALL BE UNCLASSIFIED. UNCLASSIFIED EXCAVATION SHALL BE DEFINED AS ANY NATURAL MATERIAL TO BE EXCAVATED.

15. ALL ROADWAY TRENCH PATCHING SHALL BE CITY STD 25.18, TYPE C. IF NO CURB AND GUTTER EXISTS, THE RECOMMENDED PROCEDURE IS TO LEAVE 2 FEET OF THE EXISTING PAVEMENT AT THE EDGE OF THE ROAD AND TIE THE NEW TRENCH PATCH TO THIS PAVEMENT.

City of Lynchburg Project #12024-W

Approved: City Engineer	Date MAY 2 9 2014
Approved: Utility Engineer	Date 5/22/14
Approved: Erosion and Sediment Control Administrator	Date May 30/14

NO.	REVISION	BY	DATE
3	REVISED TO ADDRESS CITY COMMENTS RECEIVED 4-8-14	JLW	5-6-14
2	ADDED SANITARY AND STORM SEWER DESIGN	GLM	3-12-14
1	REVISED TO ADDRESS CITY COMMENTS DATED MARCH 18, 2013	GLM	3-19-13

COMMONWEALTH OF VIRGINIA
JAMEY L. WHITE
Lic. No. 47808
5-6-14
PROFESSIONAL ENGINEER

WARNER WHITE
ENGINEERING PARTNERS
118 CORNERSTONE STREET
LYNCHBURG, VIRGINIA 24502
PHONE: 434-534-3201 FAX: 434-534-3202

DRAWN BY: GLM
DESIGNED BY: JLW
REVIEWED BY: TJW
PROJECT No. 12030.00
SCALE: GRAPHIC

PROJECT: CITY PROJECTS: #12024-W
PRINCETON CIRCLE WATER LINE, SANITARY SEWER & STORM SEWER REPLACEMENT PLAN
LYNCHBURG, VIRGINIA

TITLE: COVER SHEET

DATE: REV. 5-6-14 2-28-13
DRAWING No: CS1
SHEET NUMBER: 1 OF 15

FILE: P:\2012\12030.00 Princeton Circle Water Mains\Utility Plan\12030CS1.dwg

IF THIS DRAWING IS A REDUCTION GRAPHIC SCALE MUST BE USED

40' 0 40'

NO.	REVISION	BY	DATE
3	REVISED TO ADDRESS CITY COMMENTS RECEIVED 4-8-14	JLW	5-6-14
2	ADDED SANITARY AND STORM SEWER DESIGN	GLM	3-12-14
1	REVISED TO ADDRESS CITY COMMENTS DATED MARCH 18, 2013	GLM	3-19-13

COMMONWEALTH OF VIRGINIA
JAMEY L. WHITE
Lic. No. 47808
5-6-14
PROFESSIONAL ENGINEER

WARNER WHITE
ENGINEERING PARTNERS
118 CORNERSTONE STREET
LYNCHBURG, VIRGINIA 24502
PHONE: 434-534-3201 FAX: 434-534-3202

DRAWN BY: GLM
DESIGNED BY: JLW
REVIEWED BY: TJW
PROJECT No. 12030.00
SCALE: GRAPHIC

PROJECT: CITY PROJECTS: #12024-W
PRINCETON CIRCLE WATER LINE, SANITARY SEWER & STORM SEWER REPLACEMENT PLAN
LYNCHBURG, VIRGINIA

TITLE: EXISTING CONDITIONS

DATE: REV. 5-6-14 2-28-13
DRAWING No: G1
SHEET NUMBER: 2 OF 15

FILE: P:\2012\12030.00 Princeton Circle Water Mains\Utility Plan\12030G1.dwg

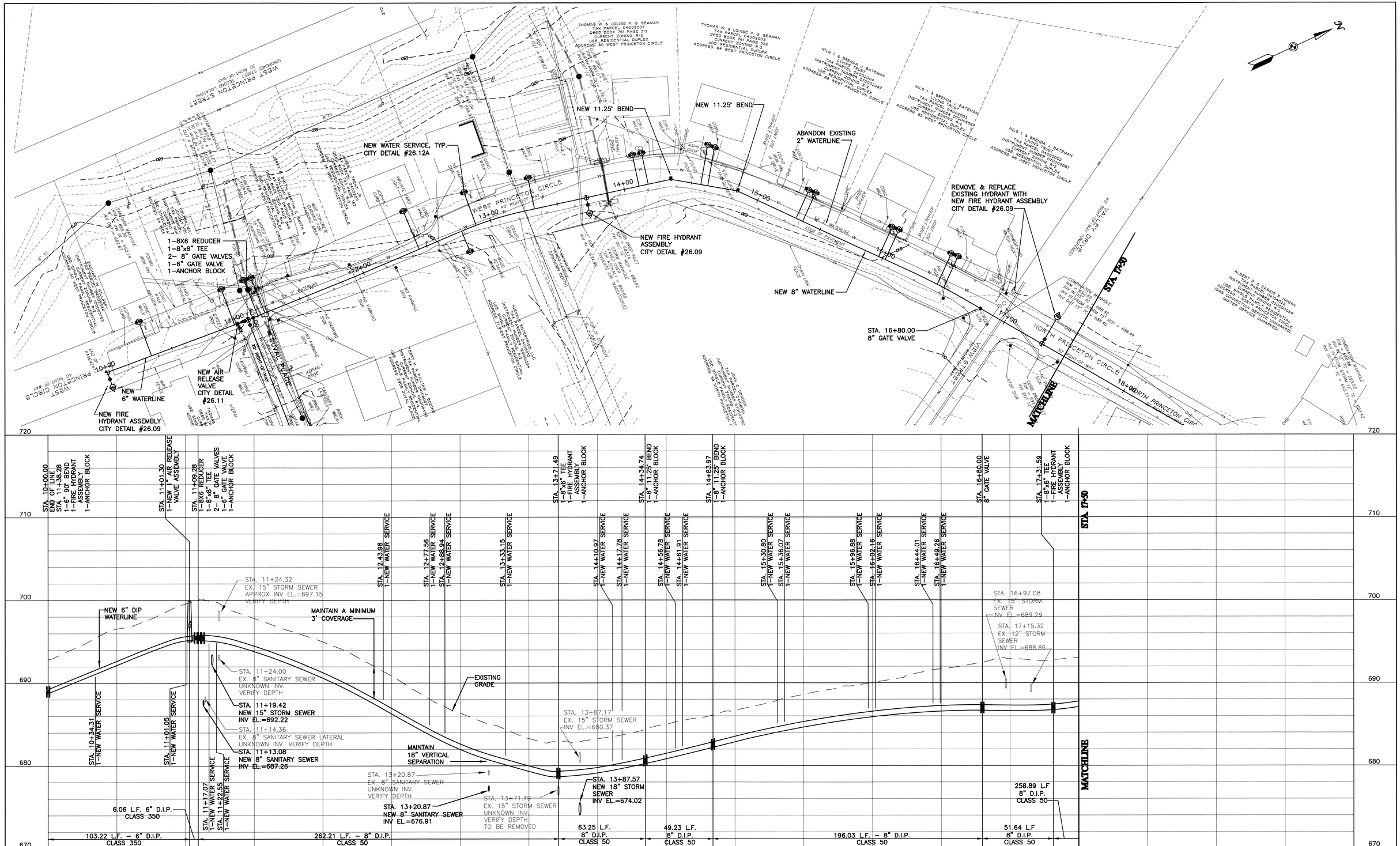

IF THIS DRAWING IS A REDUCTION GRAPHIC SCALE MUST BE USED

VERT: 5' 5'

HORIZ: 30' 0 30'

NO.	REVISION	BY	DATE
3	REVISED TO ADDRESS CITY COMMENTS RECEIVED 4-8-14	JLW	5-6-14
2	ADDED SANITARY AND STORM SEWER DESIGN	GLM	3-12-14
1	REVISED TO ADDRESS CITY COMMENTS DATED MARCH 18, 2013	GLM	3-19-13

COMMONWEALTH OF VIRGINIA
JAMES L. WHITE
Lic. No. 47808
5-6-14
PROFESSIONAL ENGINEER

WARNER WHITE
ENGINEERING PARTNERS
118 CORNERSTONE STREET
LYNCHBURG, VIRGINIA 24502
PHONE: 434-534-3201 FAX: 434-534-3202

DRAWN BY: GLM
DESIGNED BY: JLW
REVIEWED BY: TJW
PROJECT No. 12030.00
SCALE: GRAPHIC

PROJECT: CITY PROJECTS: #12024-W
PRINCETON CIRCLE WATER LINE, SANITARY SEWER & STORM SEWER REPLACEMENT PLAN
LYNCHBURG, VIRGINIA

DATE: REV. 5-6-14 2-28-13

DRAWING No: C1

TITLE: PRINCETON CIRCLE WATER LINE PLAN & PROFILE (STA 10+00 TO 17+50)

SHEET NUMBER: 3 OF 15

FILE: P:\2012\12030.00 Princeton Circle Water Mains\Utility Plan\12030C1.dwg

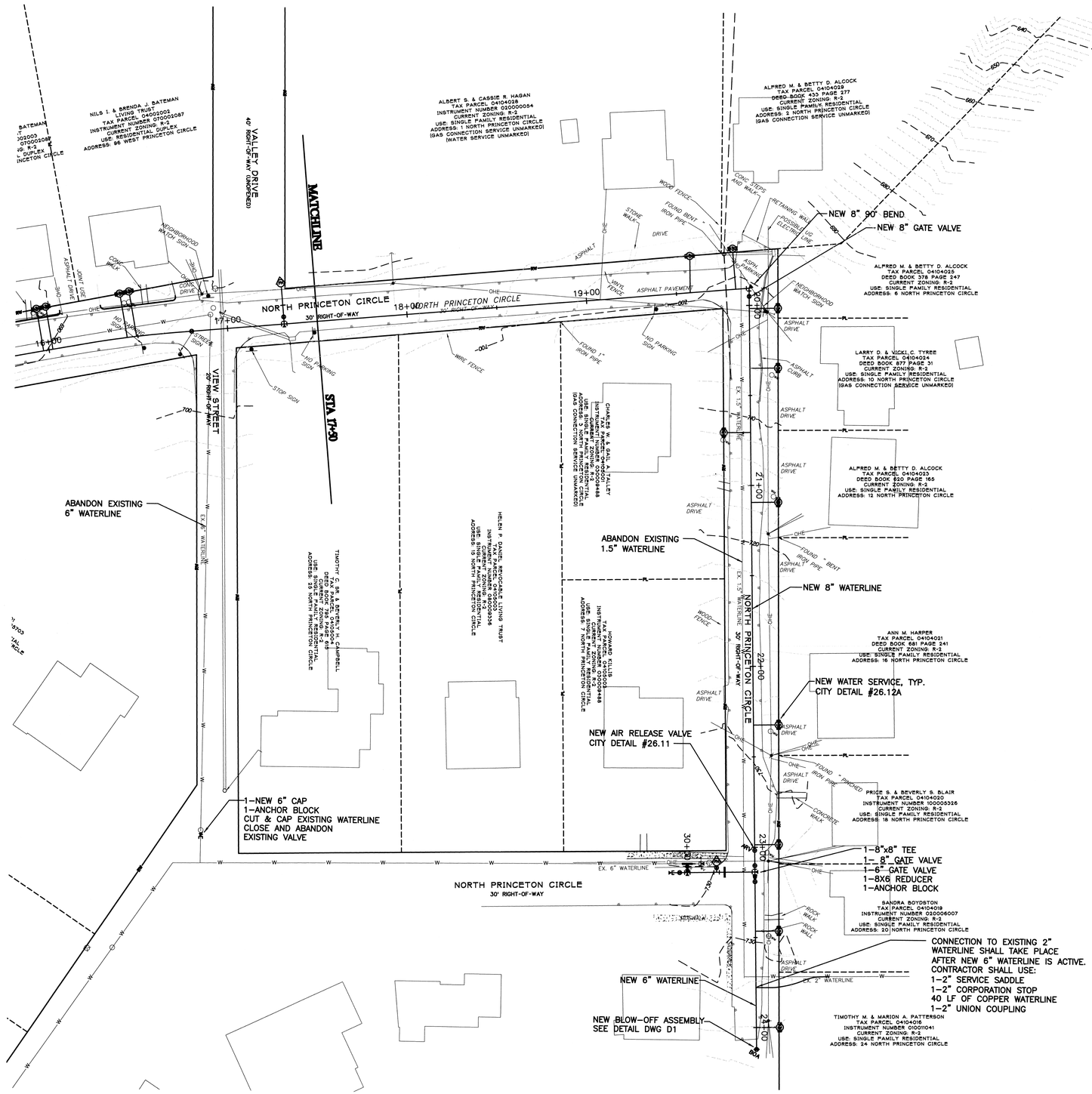

IF THIS DRAWING IS A REDUCTION GRAPHIC SCALE MUST BE USED

30' 0 30'

NO.	REVISION	BY	DATE
3	REVISED TO ADDRESS CITY COMMENTS RECEIVED 4-8-14	JLW	5-6-14
2	ADDED SANITARY AND STORM SEWER DESIGN	GLM	3-12-14
1	REVISED TO ADDRESS CITY COMMENTS DATED MARCH 18, 2013	GLM	3-19-13

COMMONWEALTH OF VIRGINIA
JAMES L. WHITE
Lic. No. 47808
5-6-14
PROFESSIONAL ENGINEER

WARNER WHITE
ENGINEERING PARTNERS
118 CORNERSTONE STREET
LYNCHBURG, VIRGINIA 24502
PHONE: 434-534-3201 FAX: 434-534-3202

DRAWN BY: GLM
DESIGNED BY: JLW
REVIEWED BY: TJW
PROJECT No. 12030.00
SCALE: GRAPHIC

PROJECT: CITY PROJECTS: #12024-W
PRINCETON CIRCLE WATER LINE, SANITARY SEWER & STORM SEWER REPLACEMENT PLAN
LYNCHBURG, VIRGINIA

TITLE: PRINCETON CIRCLE WATER LINE PLAN (STA 17+50 TO 24+12)

DATE: REV. 5-6-14 2-28-13

DRAWING No: C2

SHEET NUMBER: 4 OF 15

FILE: P:\2012\12030.00 Princeton Circle Water Mains\Utility Plan\12030C2.dwg

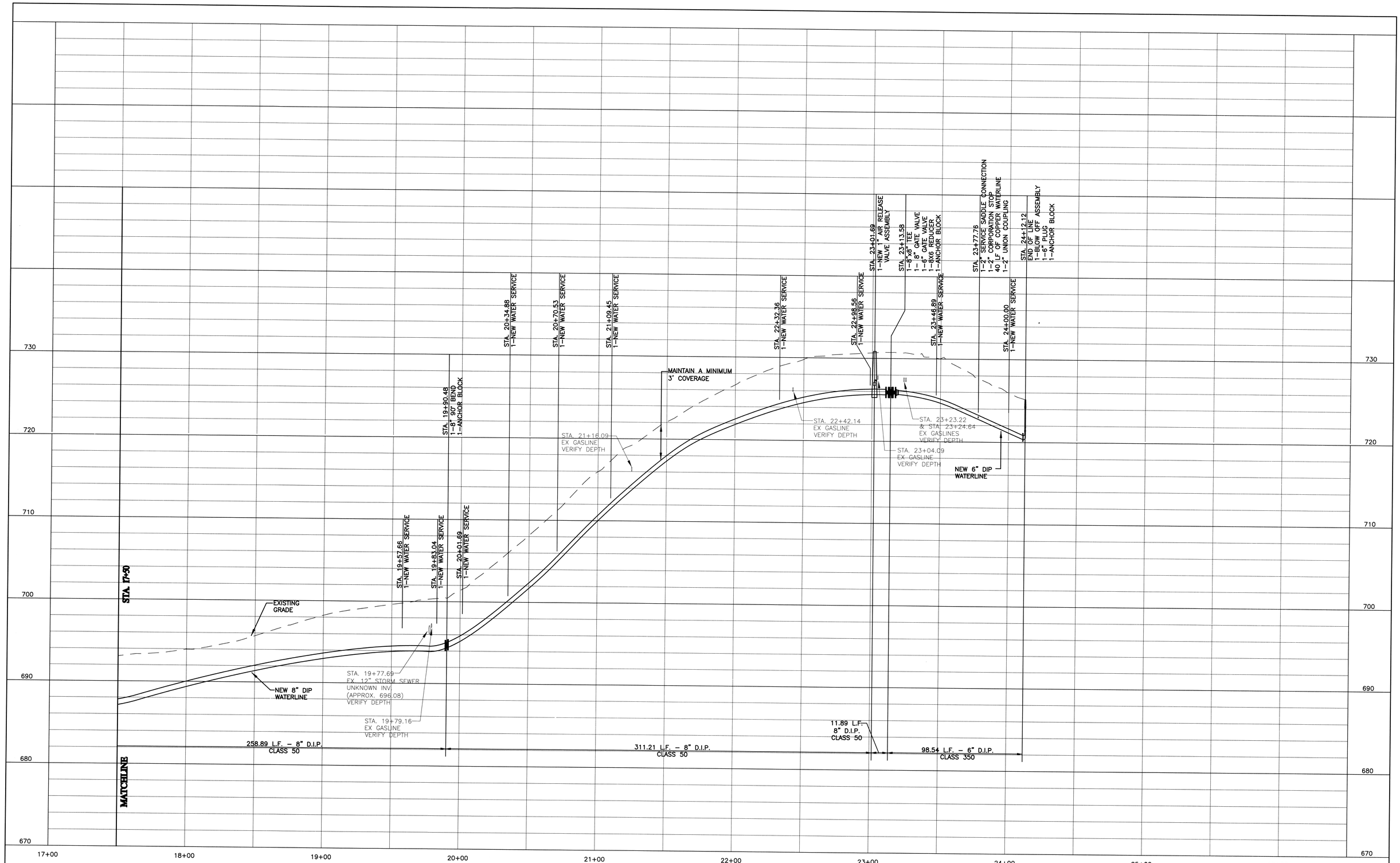

IF THIS DRAWING IS A REDUCTION
GRAPHIC SCALE MUST BE USED

VERT: 5' 5'
HORIZ: 30' 0 30'

NO.	REVISION	BY	DATE
3	REVISED TO ADDRESS CITY COMMENTS RECEIVED 4-8-14	JLW	5-6-14
2	ADDED SANITARY AND STORM SEWER DESIGN	GLM	3-12-14
1	REVISED TO ADDRESS CITY COMMENTS DATED MARCH 18, 2013	GLM	3-19-13

COMMONWEALTH OF VIRGINIA
JAMES L. WHITE
Lic. No. 47808
5-6-14
PROFESSIONAL ENGINEER

WARNER WHITE
ENGINEERING PARTNERS
118 CORNERSTONE STREET
LYNCHBURG, VIRGINIA 24502
PHONE: 434-534-3201 FAX: 434-534-3202

DRAWN BY: GLM
DESIGNED BY: JLW
REVIEWED BY: TJW
PROJECT No. 12030.00
SCALE: GRAPHIC

PROJECT: CITY PROJECTS: #12024-W
PRINCETON CIRCLE WATER LINE, SANITARY SEWER & STORM SEWER REPLACEMENT PLAN
LYNCHBURG, VIRGINIA

TITLE: PRINCETON CIRCLE WATER LINE PROFILE (STA 17+50 TO 24+12)

DATE: REV. 5-6-14 2-28-13
DRAWING No: C3
SHEET NUMBER: 5 OF 15

FILE: P:\2012\12030.00 Princeton Circle Water Mains\Utility Plan\12030C3.dwg

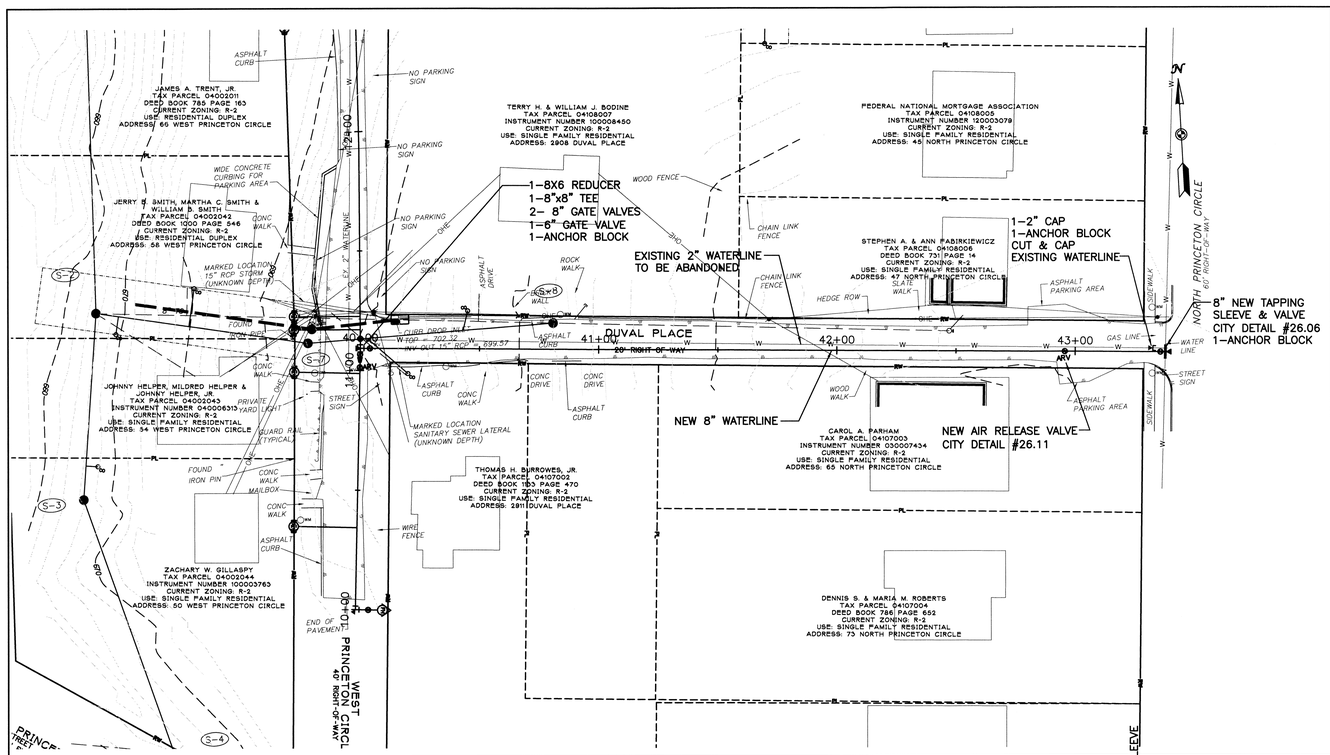

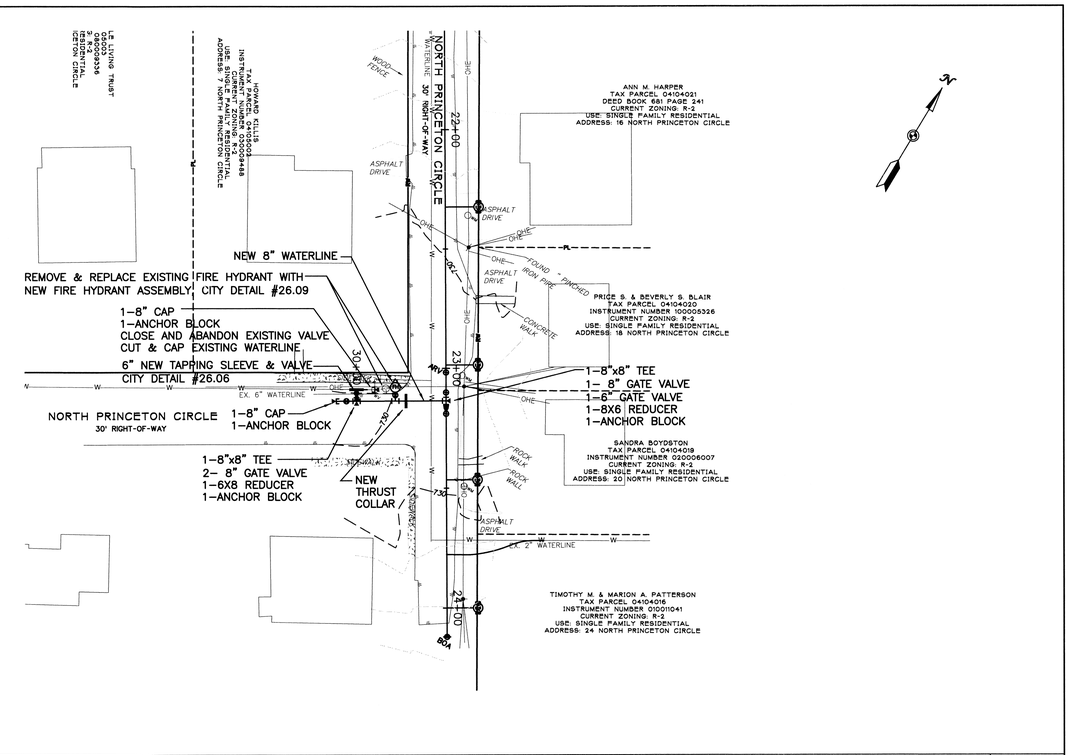

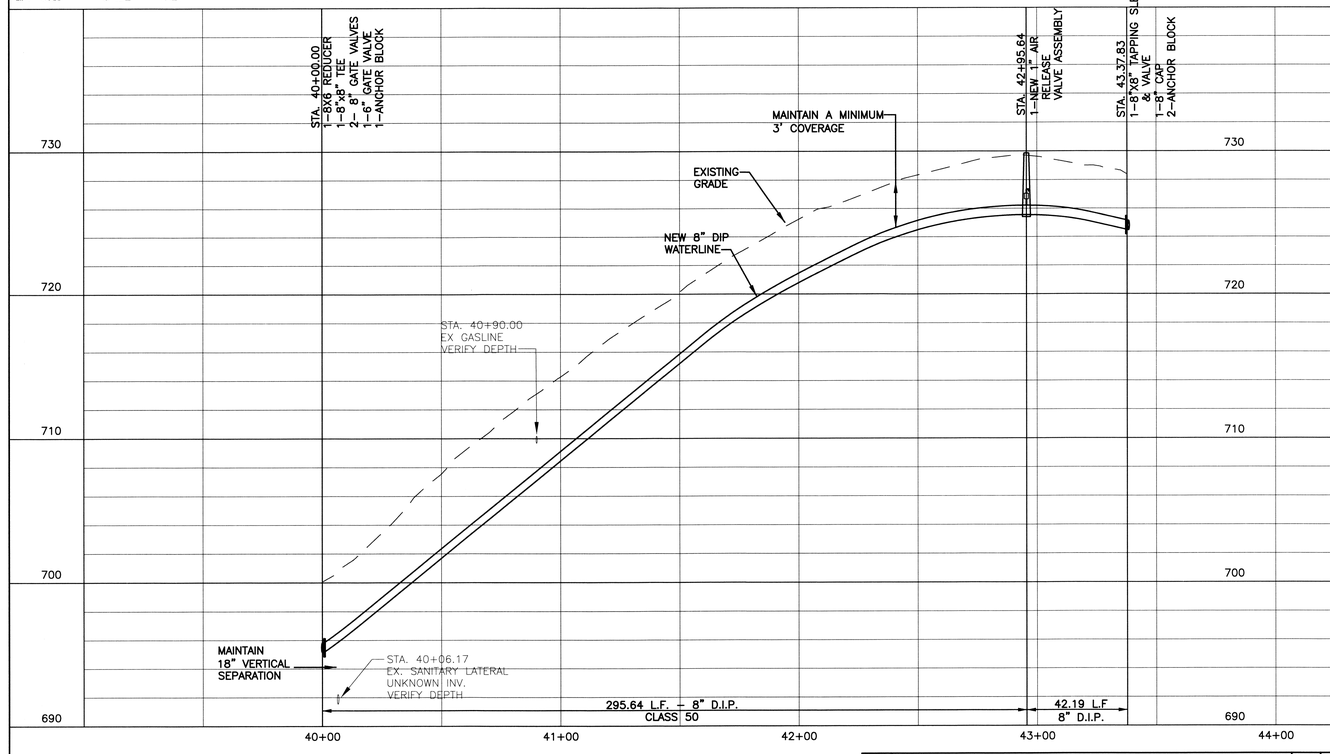

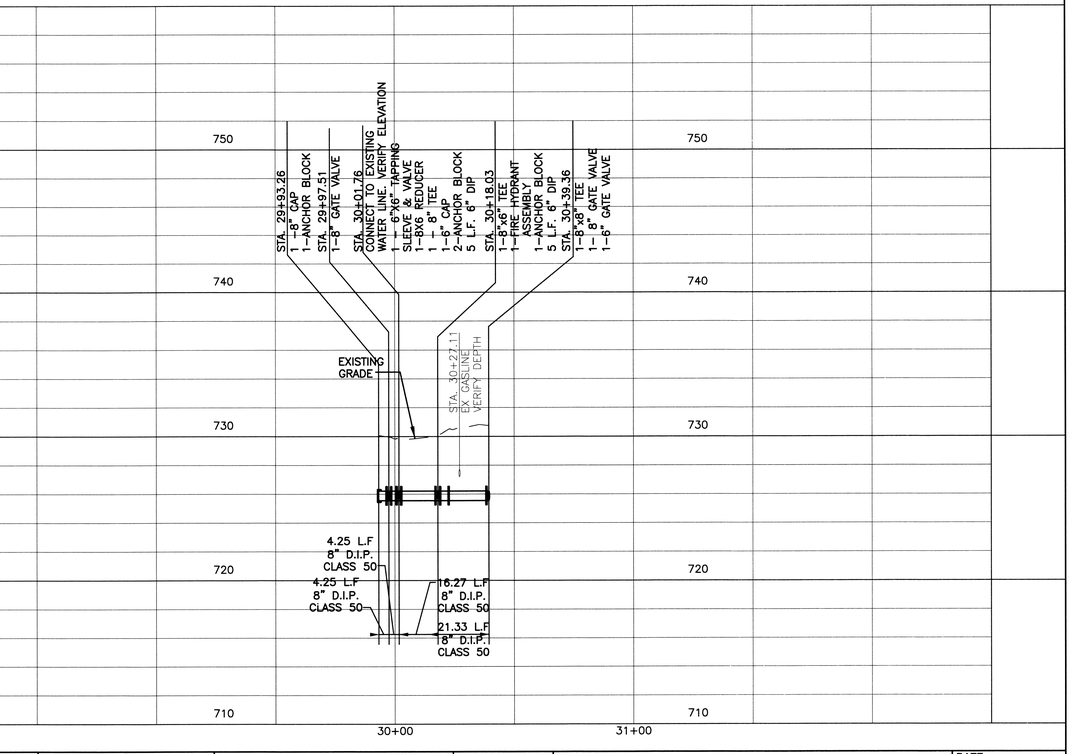

IF THIS DRAWING IS A REDUCTION GRAPHIC SCALE MUST BE USED

VERT: 5' 5'

HORIZ: 30' 0 30'

NO.	REVISION	BY	DATE
3	REVISED TO ADDRESS CITY COMMENTS RECEIVED 4-8-14	JLW	5-6-14
2	ADDED SANITARY AND STORM SEWER DESIGN	GLM	3-12-14
1	REVISED TO ADDRESS CITY COMMENTS DATED MARCH 18, 2013	GLM	3-19-13

COMMONWEALTH OF VIRGINIA
JAMES L. WHITE
Lic. No. 47808
5-6-14
PROFESSIONAL ENGINEER

WARNER WHITE
ENGINEERING PARTNERS
118 CORNERSTONE STREET
LYNCHBURG, VIRGINIA 24502
PHONE: 434-534-3201 FAX: 434-534-3202

DRAWN BY: GLM
DESIGNED BY: JLW
REVIEWED BY: TJW
PROJECT No. 12030.00
SCALE: GRAPHIC

PROJECT: CITY PROJECTS: #12024-W
PRINCETON CIRCLE WATER LINE, SANITARY SEWER & STORM SEWER REPLACEMENT PLAN
LYNCHBURG, VIRGINIA

TITLE: DUVAL PL. & NORTH PRINCETON CIR. WATER LINE PLAN & PROFILE

DATE: REV. 5-6-14 2-28-13

DRAWING No: C4

SHEET NUMBER: 6 OF 15

FILE: P:\2012\12030.00 Princeton Circle Water Mains\Utility Plan\12030C4.dwg

NOTE:

NEW SANITARY CLEANOUTS ARE SHOWN FOR EACH EXISTING HOME. CONTRACTOR SHALL FIELD LOCATE EXISTING SANITARY LATERALS AND INSTALL A NEW CLEANOUT IN THE NEAREST LOCATION TO MAINTAIN SERVICE.

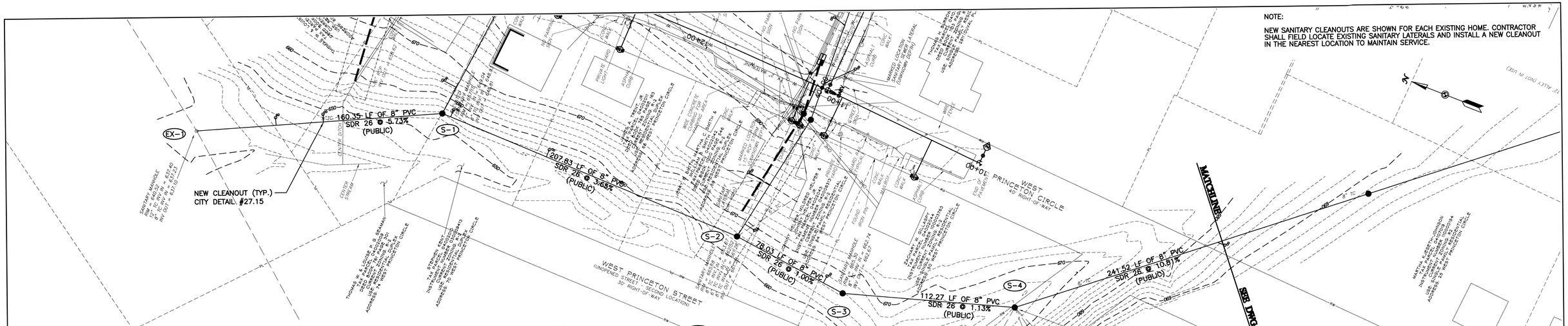

(EX-1) STD. MANHOLE (PUBLIC)
STRUC. DIA.=48"
STA 50+00.00
RIM = 640.52
INV IN = 637.40 (EX.12" TC)
INV IN = 637.23' FROM S-1
INV OUT = 637.10

(S-1) EXTERIOR DROP MANHOLE (PUBLIC)
STRUC. DIA.=48"
STA 51+60.35
RIM = 655.00
INV IN = 649.04' FROM S-9 (UPPER)
INV IN = 646.62' FROM S-9 (LOWER)
INV IN = 646.62' FROM S-2
INV OUT = 646.42'

(S-2) EXTERIOR DROP MANHOLE (PUBLIC)
STRUC. DIA.=48"
STA 70+00.00
RIM = 666.18
INV. IN = 662.52 (EX. 6" TC SERVICE)
INV IN = 659.46' FROM S-3 (UPPER)
INV IN = 654.40' FROM S-3 (LOWER)
INV IN = 655.40' FROM S-7 (UPPER)
INV IN = 654.40' FROM S-7 (LOWER)
INV OUT = 654.20'

(S-3) STD. MANHOLE (PUBLIC)
STRUC. DIA.=48"
STA 54+46.21
RIM = 664.42
INV IN = 660.44' FROM S-4
INV OUT = 660.24'

(S-4) STD. MANHOLE (PUBLIC)
STRUC. DIA.=48"
STA 55+58.48
RIM = 667.45
INV. IN = 666.07' (EX. 6" CONC.)
INV. IN = 666.00'(EX. 12" TRAN CONC.)
INV. IN = 665.95' (EX. 6" CONC.)
INV. IN = 665.29'(EX. 8" DIP)
INV IN = 661.91' FROM S-5
INV. OUT = 661.71'

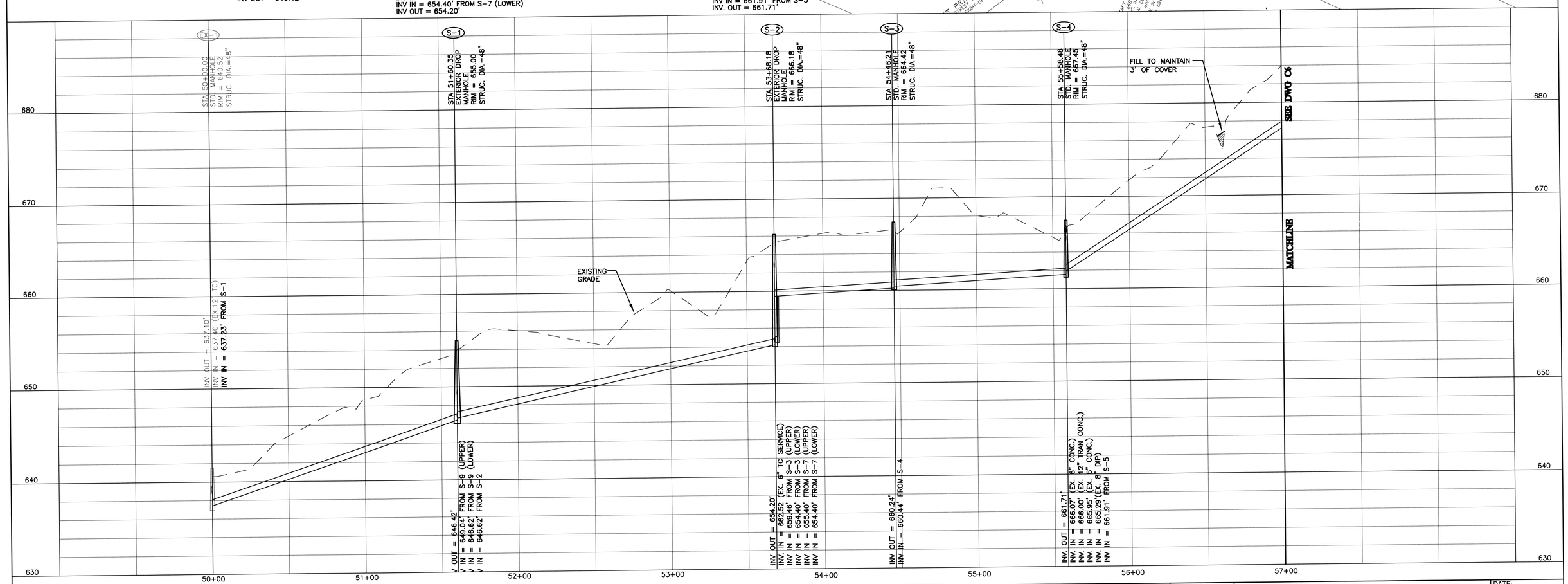

IF THIS DRAWING IS A REDUCTION
GRAPHIC SCALE MUST BE USED

VERT: 5' 5'
HORIZ: 30' 0 30'

NO.	REVISION	BY	DATE
2	REVISED TO ADDRESS CITY COMMENTS RECEIVED 4-8-14	JLW	5-6-14
1	ADDED SANITARY AND STORM SEWER DESIGN	GLM	3-12-14

COMMONWEALTH OF VIRGINIA
JAMEY L. WHITE
Lic. No. 47808
5-6-14
PROFESSIONAL ENGINEER

WARNER WHITE
ENGINEERING PARTNERS
118 CORNERSTONE STREET
LYNCHBURG, VIRGINIA 24502
PHONE: 434-534-3201 FAX: 434-534-3202

DRAWN BY: GLM
DESIGNED BY: JLW
REVIEWED BY: TJW
PROJECT No. 12030.00
SCALE: GRAPHIC

PROJECT: CITY PROJECTS: #12024-W
PRINCETON CIRCLE WATER LINE, SANITARY SEWER & STORM SEWER REPLACEMENT PLAN
LYNCHBURG, VIRGINIA

TITLE: SANITARY SEWER PLAN & PROFILE (STA 50+00 TO 57+00)

DATE: REV. 5-6-14 2-28-13
DRAWING No: C5
SHEET NUMBER: 7 OF 15

FILE: P:\2012\12030.00 Princeton Circle Water Mains\Utility Plan\12030C5.dwg

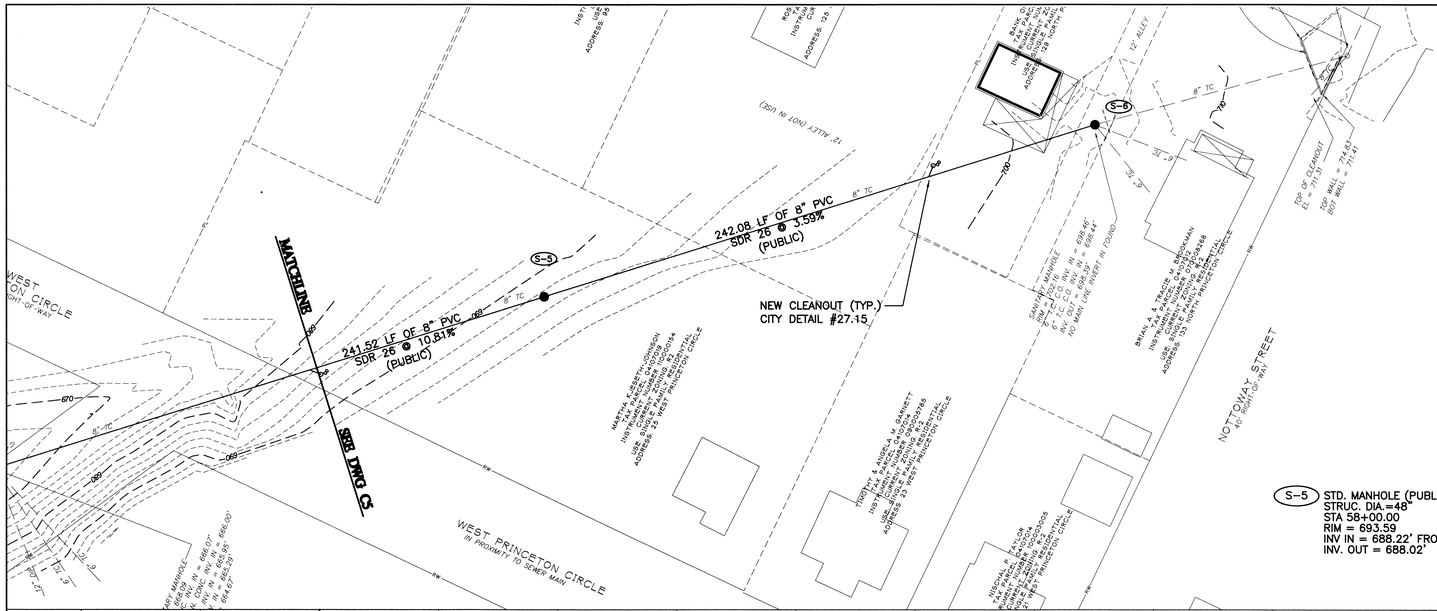

NOTE:

NEW SANITARY CLEANOUTS ARE SHOWN FOR EACH EXISTING HOME. CONTRACTOR SHALL FIELD LOCATE EXISTING SANITARY LATERALS AND INSTALL A NEW CLEANOUT IN THE NEAREST LOCATION TO MAINTAIN SERVICE.

N

(S-5) STD. MANHOLE (PUBLIC)
STRUC. DIA.=48"
STA 58+00.00
RIM = 693.59
INV IN = 688.22' FROM S-6
INV. OUT = 688.02'

(S-6) STD. MANHOLE (PUBLIC)
STRUC. DIA.=48"
STA 60+42.08
RIM = 702.63
INV. IN = 698.46' (EX. 6" TC C.O.)
INV. IN = 698.44' (EX. 6" TC C.O.)
INV. IN = 697.10' (EX. 8" TC)
INV. OUT = 696.90'

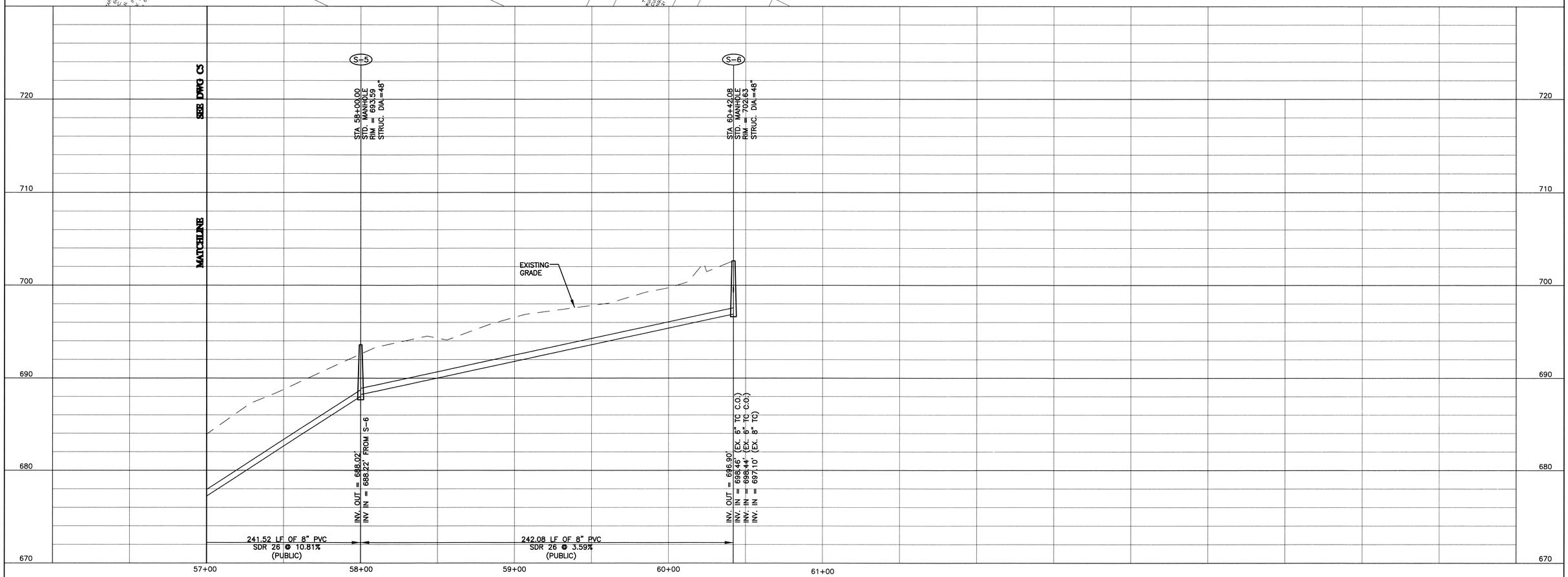

IF THIS DRAWING IS A REDUCTION GRAPHIC SCALE MUST BE USED

VERT: 5' 5'
HORIZ: 30' 0 30'

NO.	REVISION	BY	DATE
2	REVISED TO ADDRESS CITY COMMENTS RECEIVED 4-8-14	JLW	5-6-14
1	ADDED SANITARY AND STORM SEWER DESIGN	GLM	3-12-14

COMMONWEALTH OF VIRGINIA
JAMEYL WHITE
Lic. No. 47808
5-6-14
PROFESSIONAL ENGINEER

WARNER WHITE
ENGINEERING PARTNERS
118 CORNERSTONE STREET
LYNCHBURG, VIRGINIA 24502
PHONE: 434-534-3201 FAX: 434-534-3202

DRAWN BY: GLM
DESIGNED BY: JLW
REVIEWED BY: TJW
PROJECT No. 12030.00
SCALE: GRAPHIC

PROJECT: CITY PROJECTS: #12024-W
PRINCETON CIRCLE WATER LINE, SANITARY SEWER & STORM SEWER REPLACEMENT PLAN
LYNCHBURG, VIRGINIA

TITLE: SANITARY SEWER PLAN & PROFILE (STA. 57+00 TO 60+42)

DATE: REV. 5-6-14 2-28-13
DRAWING No: C6
SHEET NUMBER: 8 OF 15

FILE: P:\2012\12030.00 Princeton Circle Water Mains\Utility Plan\12030C6.dwg

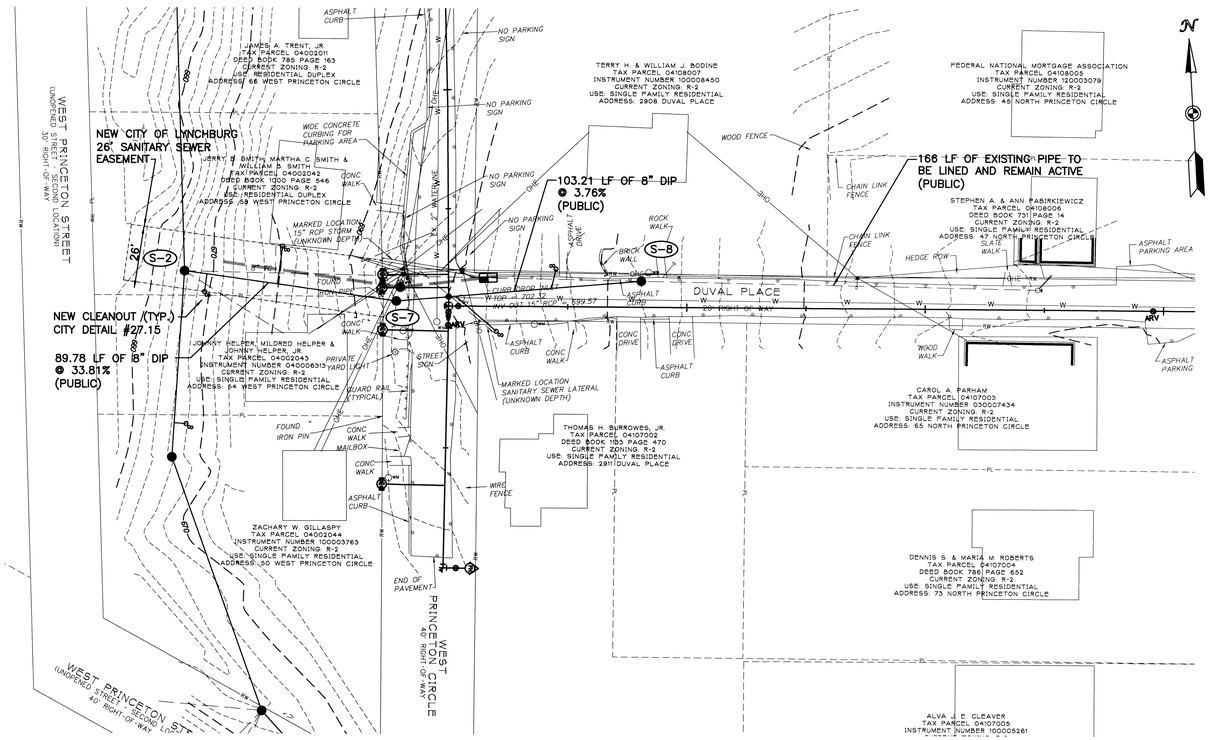

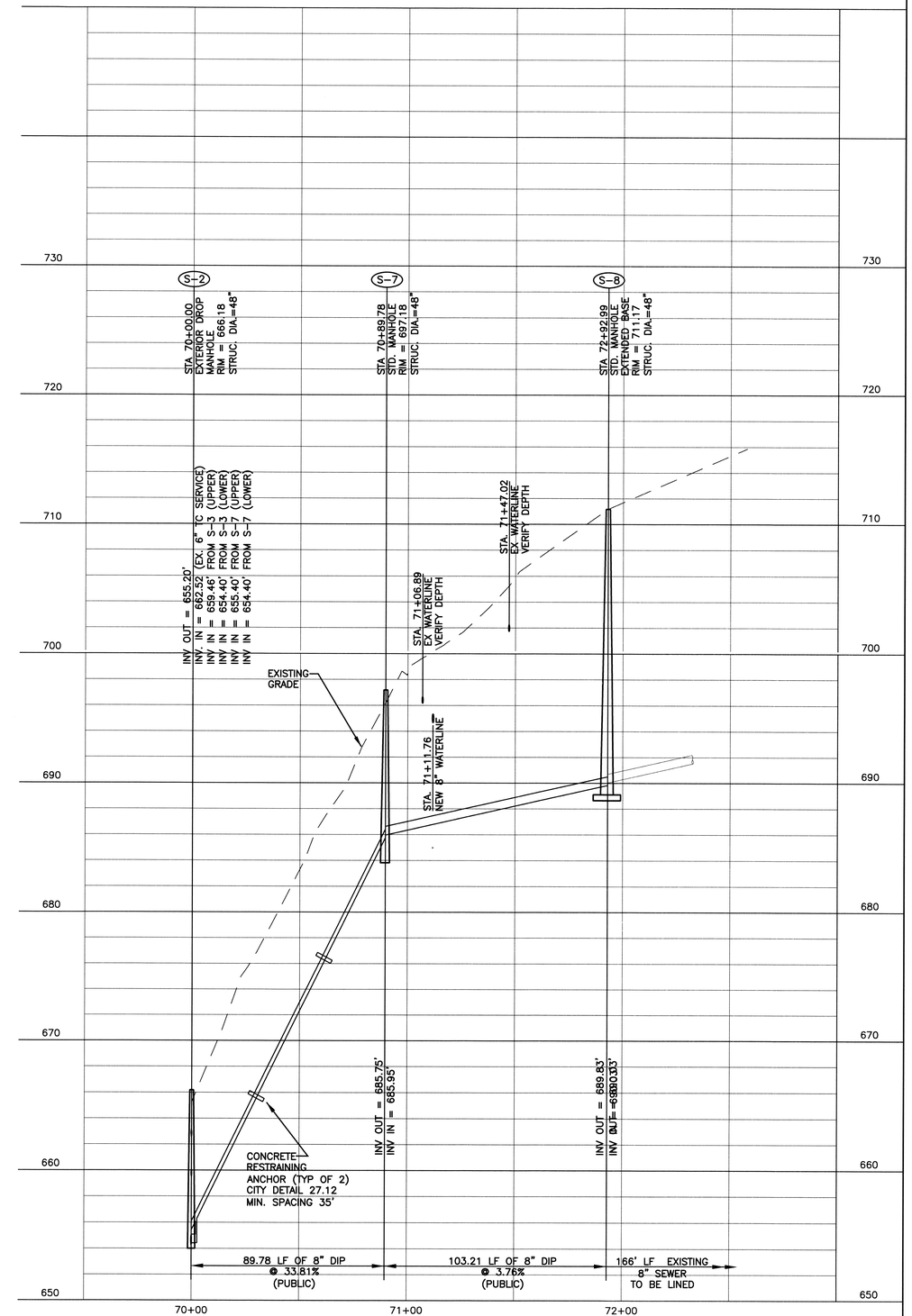

S-2 EXTERIOR DROP MANHOLE (PUBLIC)
STRUC. DIA.=48"
STA 70+00.00
RIM = 666.18
INV. IN = 662.52 (EX. 6" TC SERVICE)
INV IN = 659.46' FROM S-3 (UPPER)
INV IN = 654.40' FROM S-3 (LOWER)
INV IN = 655.40' FROM S-7 (UPPER)
INV IN = 654.40' FROM S-7 (LOWER)
INV OUT = 654.20'

S-7 STD. MANHOLE (PUBLIC)
STRUC. DIA.=48"
STA 70+89.78
RIM = 697.18
INV IN = 685.95'
INV OUT = 685.75'

S-8 STD. MANHOLE (PUBLIC)
EXTENDED BASE
STRUC. DIA.=48"
STA 72+92.99
RIM = 711.17
INV OUT = 689.83'

NOTE:

NEW SANITARY CLEANOUTS ARE SHOWN FOR EACH EXISTING HOME. CONTRACTOR SHALL FIELD LOCATE EXISTING SANITARY LATERALS AND INSTALL A NEW CLEANOUT IN THE NEAREST LOCATION TO MAINTAIN SERVICE.

IF THIS DRAWING IS A REDUCTION
GRAPHIC SCALE MUST BE USED

VERT: 5' 5'
HORIZ: 30' 0 30'

NO.	REVISION	BY	DATE
2	REVISED TO ADDRESS CITY COMMENTS RECEIVED 4-8-14	JLW	5-6-14
1	ADDED SANITARY AND STORM SEWER DESIGN	GLM	3-12-14

COMMONWEALTH OF VIRGINIA
JAMES L. WHITE
Lic. No. 47808
5-6-14
PROFESSIONAL ENGINEER

WARNER WHITE
ENGINEERING PARTNERS
118 CORNERSTONE STREET
LYNCHBURG, VIRGINIA 24502
PHONE: 434-534-3201 FAX: 434-534-3202

DRAWN BY: GLM
DESIGNED BY: JLW
REVIEWED BY: TJW
PROJECT No. 12030.00
SCALE: GRAPHIC

PROJECT: CITY PROJECTS: #12024-W
PRINCETON CIRCLE WATER LINE, SANITARY SEWER & STORM SEWER REPLACEMENT PLAN
LYNCHBURG, VIRGINIA

TITLE: SANITARY SEWER PLAN & PROFILE (STA. 70+00 TO 72+59)

DATE: REV. 5-6-14 2-28-13
DRAWING No: C7
SHEET NUMBER: 9 OF 15

FILE: P:\2012\12030.00 Princeton Circle Water Mains\Utility Plan\12030C7.dwg

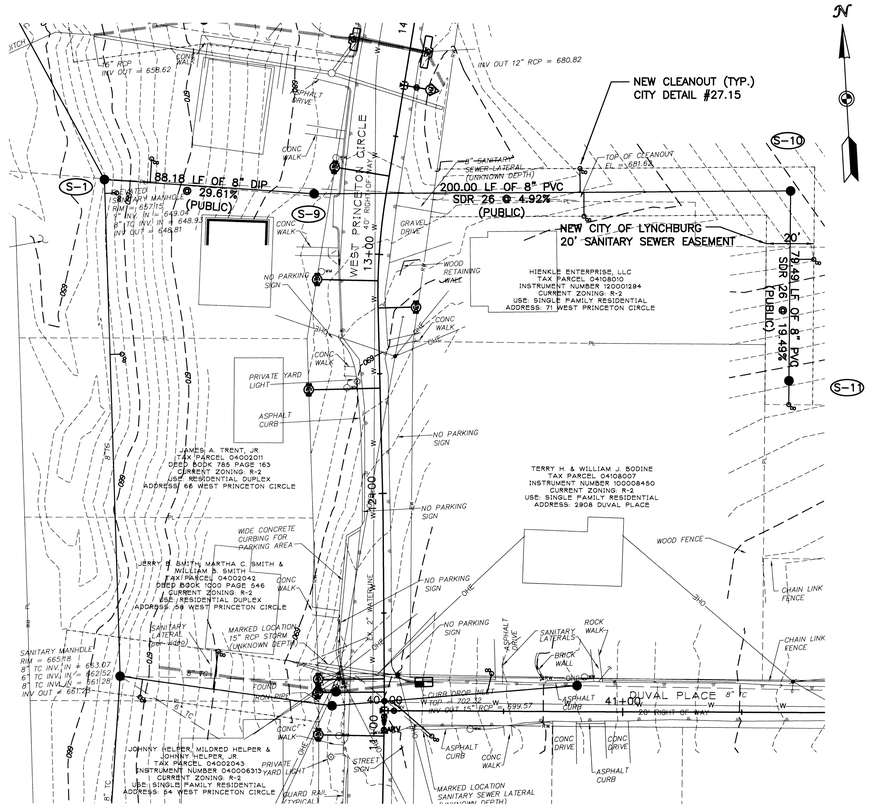

S-1 EXTERIOR DROP MANHOLE (PUBLIC)
STRUC. DIA.=48"
STA 51+60.35
RIM = 655.00
INV IN = 649.04' FROM S-9 (UPPER)
INV IN = 646.62' FROM S-9 (LOWER)
INV IN = 646.62' FROM S-2
INV OUT = 646.42'

S-9 STD. MANHOLE (PUBLIC)
STRUC. DIA.=48"
STA 80+88.18
RIM = 682.95
INV IN = 675.35'
INV OUT = 675.15'

S-10 EXTERIOR DROP MANHOLE (PUBLIC)
EXTENDED BASE
STRUC. DIA.=48"
STA 82+83.11
RIM = 699.28'
INV IN = 687.39' (UPPER)
INV IN = 685.39' (LOWER)
INV OUT = 685.19'

S-11 STD. MANHOLE (PUBLIC)
EXTENDED BASE
STRUC. DIA.=48"
STA 83+67.59
RIM = 712.33'
INV OUT = 700.88'

NOTE:

NEW SANITARY CLEANOUTS ARE SHOWN FOR EACH EXISTING HOME. CONTRACTOR SHALL FIELD LOCATE EXISTING SANITARY LATERALS AND INSTALL A NEW CLEANOUT IN THE NEAREST LOCATION TO MAINTAIN SERVICE.

IF THIS DRAWING IS A REDUCTION GRAPHIC SCALE MUST BE USED

VERT: 5' 5'
HORIZ: 30' 0 30'

NO.	REVISION	BY	DATE
2	REVISED TO ADDRESS CITY COMMENTS RECEIVED 4-8-14	JLW	5-6-14
1	ADDED SANITARY AND STORM SEWER DESIGN	GLM	3-12-14

COMMONWEALTH OF VIRGINIA
JAMES L. WHITE
Lic. No. 47808
5-6-14
PROFESSIONAL ENGINEER

WARNER WHITE
ENGINEERING PARTNERS
118 CORNERSTONE STREET
LYNCHBURG, VIRGINIA 24502
PHONE: 434-534-3201 FAX: 434-534-3202

DRAWN BY: GLM
DESIGNED BY: JLW
REVIEWED BY: TJW
PROJECT No. 12030.00
SCALE: GRAPHIC

PROJECT: CITY PROJECTS: #12024-W
PRINCETON CIRCLE WATER LINE, SANITARY SEWER & STORM SEWER REPLACEMENT PLAN
LYNCHBURG, VIRGINIA

TITLE: SANITARY SEWER PLAN & PROFILE (STA. 80+00 TO 84+37)

DATE: REV. 5-6-14 2-28-13
DRAWING No: C8
SHEET NUMBER: 10 OF 15

FILE: P:\2012\12030.00 Princeton Circle Water Mains\Utility Plan\12030C8.dwg

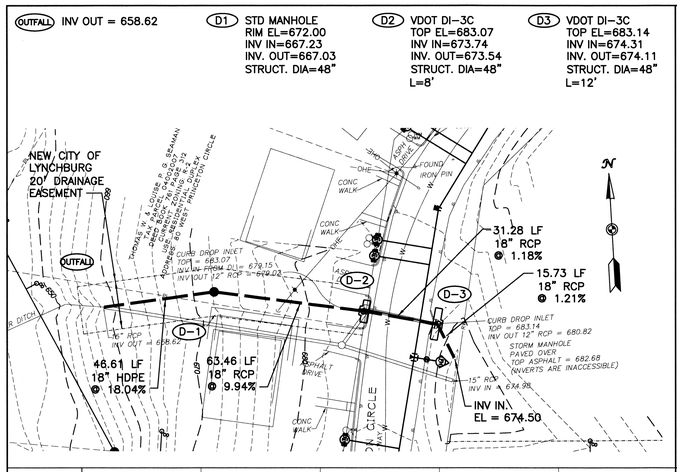

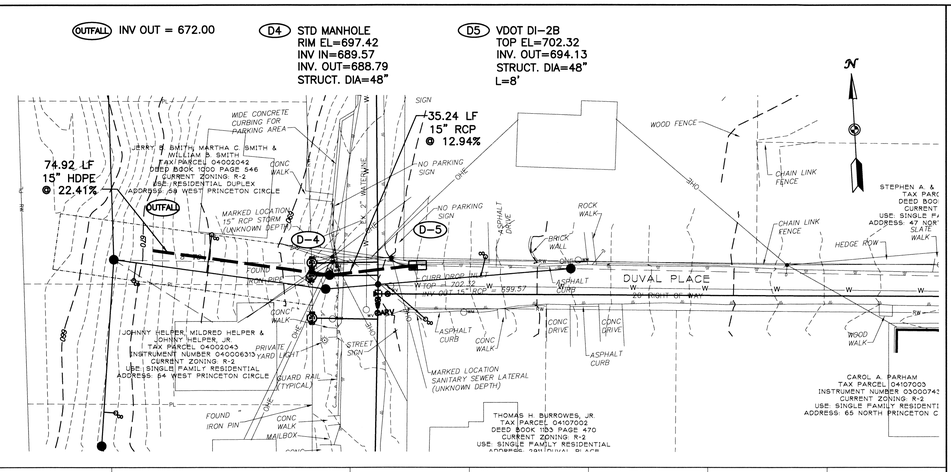

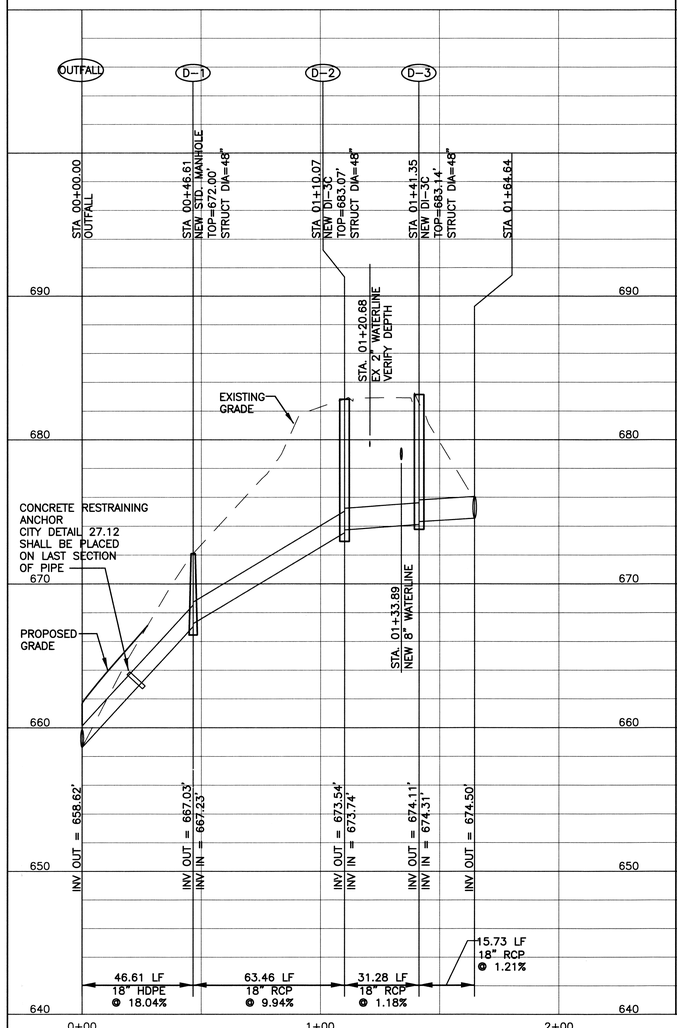

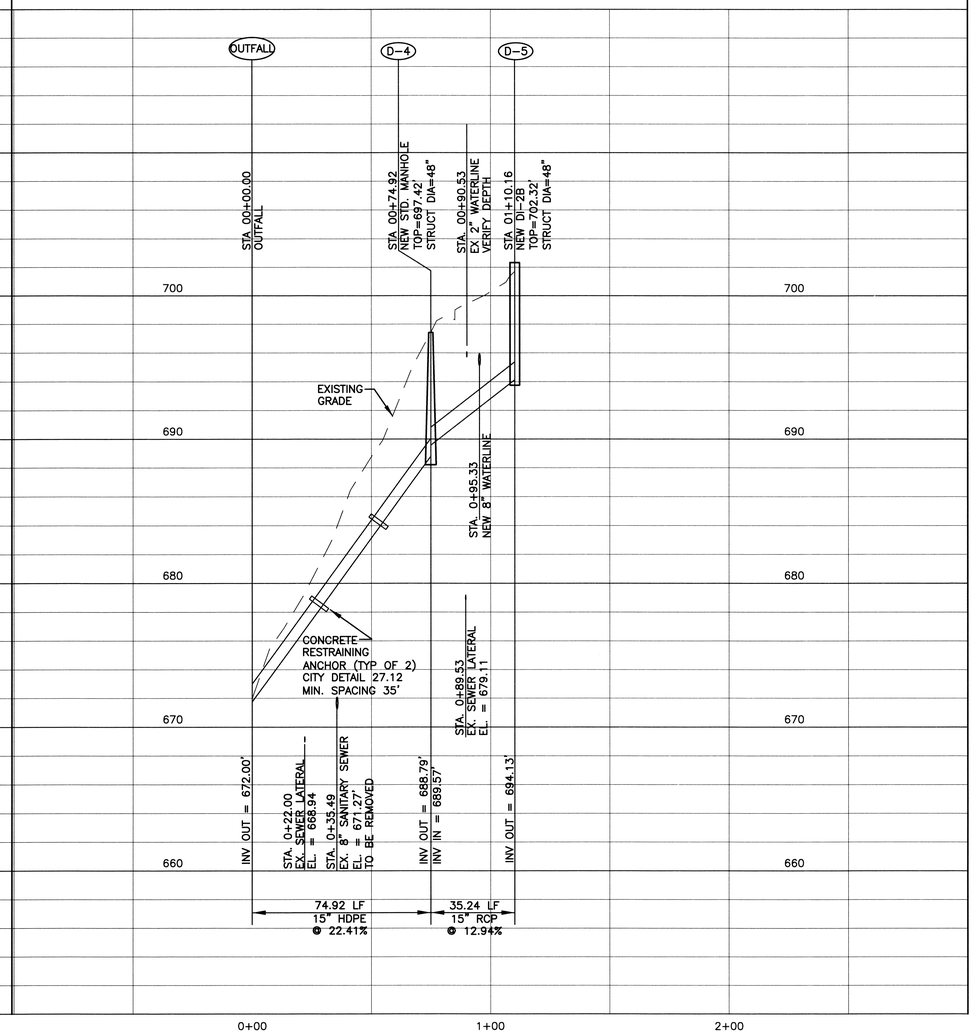

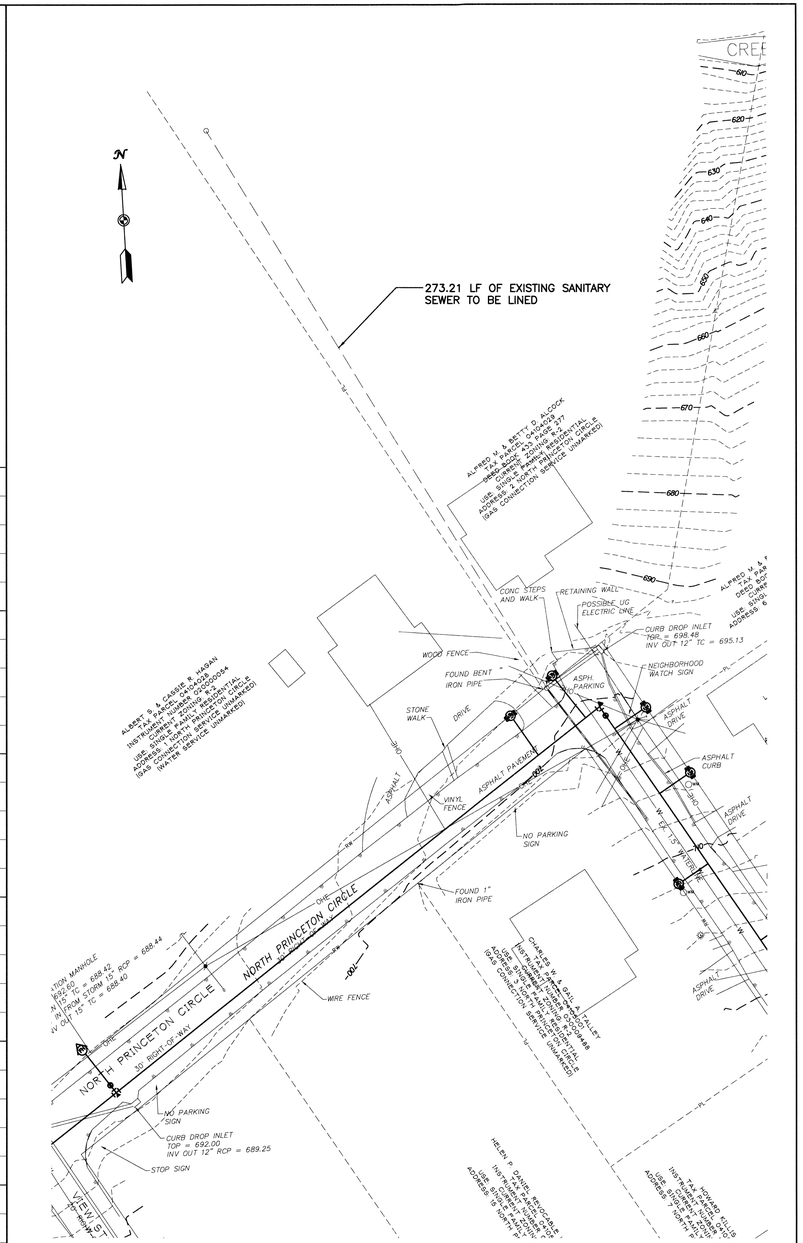

IF THIS DRAWING IS A REDUCTION GRAPHIC SCALE MUST BE USED

VERT: 5' 5'

HORIZ: 30' 0 30'

NO.	REVISION	BY	DATE
2	REVISED TO ADDRESS CITY COMMENTS RECEIVED 4-8-14	JLW	5-6-14
1	ADDED SANITARY AND STORM SEWER DESIGN	GLM	3-12-14

COMMONWEALTH OF VIRGINIA
JAMES L. WHITE
Lic. No. 47808
5-6-14
PROFESSIONAL ENGINEER

WARNER WHITE
ENGINEERING PARTNERS
118 CORNERSTONE STREET
LYNCHBURG, VIRGINIA 24502
PHONE: 434-534-3201 FAX: 434-534-3202

DRAWN BY:	GLM
DESIGNED BY:	JLW
REVIEWED BY:	TJW
PROJECT No.	12030.00
SCALE:	GRAPHIC

PROJECT: CITY PROJECTS: #12024-W
PRINCETON CIRCLE WATER LINE, SANITARY SEWER & STORM SEWER REPLACEMENT PLAN
LYNCHBURG, VIRGINIA

TITLE: SANITARY & STORM SEWER PLAN & PROFILES

DATE: REV. 5-6-14 2-28-13

DRAWING No: C9

SHEET NUMBER: 11 OF 15

FILE: P:\2012\12030.00 Princeton Circle Water Mains\Utility Plan\12030C9.dwg

EROSION & SEDIMENT CONTROL LEGEND

3.07	STORM DRAIN INLET PROTECTION	IP
3.08	CULVERT INLET PROTECTION	CIP
3.17	STORMWATER CONVEYANCE CHANNEL	SCC
3.18	OUTLET PROTECTION	OP
3.19	RIPRAP	RR
3.31	TEMPORARY SEEDING	TS
3.32	PERMANENT SEEDING	PS
3.35	MULCHING	MU
3.36	SOIL STABILIZATION BLANKETS & MATTING	B/M

OUTLET PROTECTION SUMMARY TABLE

ID	MATERIAL TYPE	BLANKET THICKNESS	BLANKET DIMENSIONS	AMOUNT OF RIPRAP (TONS)	GEOTEXTILE FABRIC NEEDED
OP-1	EC CLASS A1	1.50'	4.5'x4.5'	2.20	2.25 SY
OP-2	EC CLASS A1	1.50'	3.75'x3.75'	1.53	1.56 SY

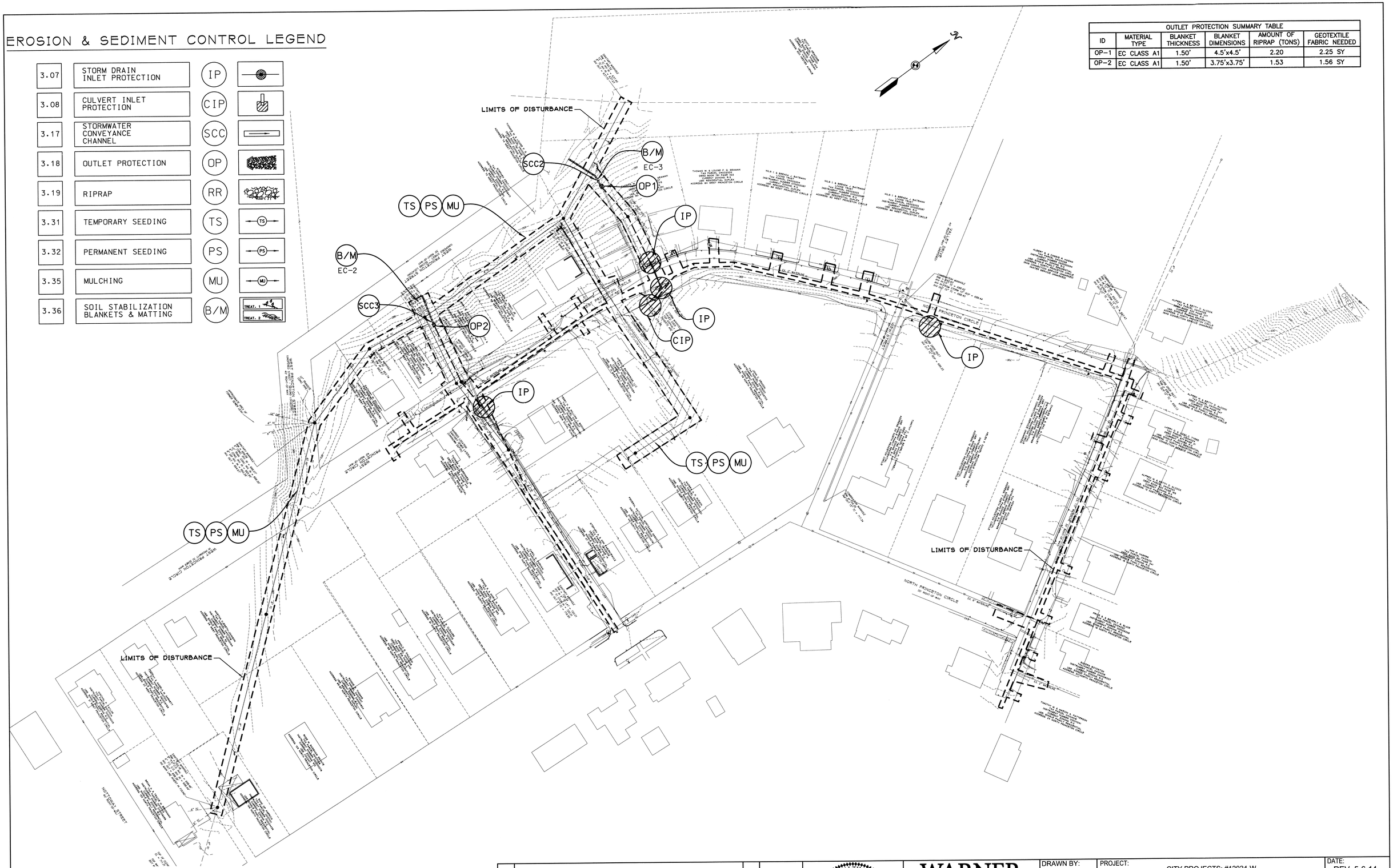

IF THIS DRAWING IS A REDUCTION GRAPHIC SCALE MUST BE USED

50' 0 50'

NO.	REVISION	BY	DATE
2	REVISED TO ADDRESS CITY COMMENTS RECEIVED 4-8-14	JLW	5-6-14
1	ADDED SANITARY AND STORM SEWER DESIGN	GLM	3-12-14

COMMONWEALTH OF VIRGINIA
JAMES L. WHITE
Lic. No. 47808
5-6-14
PROFESSIONAL ENGINEER

WARNER WHITE
ENGINEERING PARTNERS
118 CORNERSTONE STREET
LYNCHBURG, VIRGINIA 24502
PHONE: 434-534-3201 FAX: 434-534-3202

DRAWN BY: GLM
DESIGNED BY: JLW
REVIEWED BY: TJW
PROJECT No. 12030.00
SCALE: GRAPHIC

PROJECT: CITY PROJECTS: #12024-W
PRINCETON CIRCLE WATER LINE, SANITARY SEWER & STORM SEWER REPLACEMENT PLAN
LYNCHBURG, VIRGINIA

TITLE: EROSION & SEDIMENT CONTROL PLAN

DATE: REV. 5-6-14 2-28-13
DRAWING No: EC1
SHEET NUMBER: 12 OF 15

FILE: P:\2012\12030.00 Princeton Circle Water Mains\Utility Plan\12030EC1.dwg

I. PROJECT DESCRIPTION

THE PURPOSE OF THIS PLAN IS TO REPLACE THE EXISTING 2" WATER MAIN ALONG NORTH & WEST PRINCETON CIRCLE AND DUVAL PLACE WITH APPROXIMATELY 1,581 LINEAR FEET OF 8" WATER MAIN AND 208 LINEAR FEET OF 6" WATER MAIN. THIS PLAN WILL ALSO REPLACE APPROXIMATELY 1,602 LINEAR FEET OF EXISTING SANITARY SEWER MAIN AND 267 LINEAR FEET OF STORM SEWER THAT SERVES THE RESIDENTS OF WEST PRINCETON CIRCLE AND DUVAL PLACE. APPROXIMATELY 440 L.F. OF EXISTING SANITARY SEWER WILL REMAIN IN USE AND WILL BE LINED. THIS PROJECT INVOLVES THE DISTURBANCE OF APPROXIMATELY 1.03 ACRES.

II. EXISTING SITE CONDITIONS
THE SITE IS LOCATED IN LYNCHBURG VIRGINIA ALONG NORTH & WEST PRINCETON CIRCLE & DUVAL PLACE.

III. ADJACENT PROPERTIES
THE PROJECT SITE IS BOUND BY RESIDENTIAL DEVELOPMENT.

IV. OFF-SITE AREAS
NO OFF-SITE ACTIVITY IS FORESEEN FOR THIS PROJECT.

V. SOILS
CCC2 CECIL FINE SANDY LOAM, 6 TO 15 PERCENT SLOPES, ERODED
CUE2 CULLEN LOAM, 15 TO 25 PERCENT SLOPES, ERODED
MAC2 MADISON LOAM, 6 TO 15 PERCENT SLOPES, ERODED
MAE2 MADISON LOAM, 15 TO 25 PERCENT SLOPES, ERODED
MZB2 MECKLENBURG LOAM, 2 TO 6 PERCENT SLOPES, ERODED
WKE WILKES LOAM, 15 TO 25 PERCENT SLOPES

VI. CRITICAL AREAS
THERE ARE NO CRITICAL AREAS IN THE PROJECT AREA.

VII. EROSION AND SEDIMENT CONTROL MEASURES
ALL VEGETATIVE AND STRUCTURAL EROSION AND SEDIMENT CONTROL PRACTICES SHALL BE CONSTRUCTED AND MAINTAINED BY THE CONTRACTOR IN ACCORDANCE WITH THE LATEST EDITION OF THE VIRGINIA EROSION AND SEDIMENT CONTROL HANDBOOK, AND THE VIRGINIA DEPARTMENT OF TRANSPORTATION'S ROAD AND BRIDGE STANDARDS.

A. STRUCTURAL PRACTICES

3.07 STORM DRAIN INLET PROTECTION: THE INSTALLATION OF VARIOUS KINDS OF SEDIMENT TRAPPING MEASURES AROUND DROP INLETS OR CURB INLET STRUCTURES PRIOR TO PERMANENT STABILIZATION OF THE DISTURBED AREA; LIMITED TO DRAINAGE AREAS NOT EXCEEDING ONE ACRE, AND NOT INTENDED TO CONTROL LARGE, CONCENTRATED STORMWATER FLOWS.

3.08 CULVERT INLET PROTECTION: A SEDIMENT FILTER LOCATED AT THE INLET TO STORM SEWER CULVERTS WHICH PREVENTS SEDIMENT FROM ENTERING, ACCUMULATING IN AND BEING TRANSFERRED BY THE CULVERT. IT ALSO PROVIDES EROSION CONTROL AT CULVERTS DURING THE PHASE OF A PROJECT WHERE ELEVATIONS AND DRAINAGE PATTERNS ARE CHANGING, CAUSING ORIGINAL CONTROL MEASURES TO BE INEFFECTIVE.

3.17 STORMWATER CONVEYANCE CHANNEL: A PERMANENT CHANNEL DESIGNED TO CARRY CONCENTRATED FLOWS WITHOUT EROSION. APPLICABLE TO MANMADE CHANNELS, INCLUDING ROADSIDE DITCHES, AND NATURAL CHANNELS THAT ARE MODIFIED TO ACCOMMODATE INCREASED FLOWS GENERATED BY LAND DEVELOPMENT; NOT GENERALLY APPLICABLE TO MAJOR, CONTINUOUS-FLOWING NATURAL STREAMS.

3.18 OUTLET PROTECTION: THE INSTALLATION OF RIP RAP CHANNEL SECTIONS AND/OR STILLING BASINS BELOW STORM DRAIN OUTLETS TO REDUCE EROSION AND UNDER-CUTTING FROM SCOURING AT OUTLETS AND TO REDUCE FLOW VELOCITIES BEFORE STORMWATER ENTERS RECEIVING CHANNELS BELOW THESE OUTLETS.

3.19 RIPRAP: A PERMANENT, EROSION-RESISTANT GROUND COVER OF LARGE, LOOSE, ANGULAR STONE INSTALLED WHEREVER SOIL CONDITIONS, WATER TURBULENCE AND VELOCITY, EXPECTED VEGETATIVE COVER, ETC., ARE SUCH THAT SOIL MAY ERODE UNDER DESIGN FLOW CONDITIONS.

B. VEGETATIVE PRACTICES

3.31 TEMPORARY SEEDING: ESTABLISHMENT OF TEMPORARY VEGETATIVE COVER ON DISTURBED AREAS THAT WILL NOT BE BROUGHT TO FINAL GRADE FOR PERIODS OF 30 DAYS TO ONE YEAR BY SEEDING WITH APPROPRIATE RAPIDLY-GROWING PLANTS.

3.32 PERMANENT SEEDING: ESTABLISHMENT OF PERENNIAL VEGETATIVE COVER BY PLANTING SEED ON ROUGH-GRADED AREAS THAT WILL NOT BE BROUGHT TO FINAL GRADE FOR A YEAR OR MORE OR WHERE PERMANENT, LONG-LIVED VEGETATIVE COVER IS NEEDED ON FINE-GRADED AREAS.

3.35 MULCHING: APPLICATION OF PLANT RESIDUES OR OTHER SUITABLE MATERIALS TO DISTURBED SURFACES TO PREVENT EROSION AND REDUCE OVERLAND FLOW VELOCITIES. FOSTERS PLANT GROWTH BY INCREASING AVAILABLE MOISTURE AND PROVIDING INSULATION AGAINST EXTREME HEAT OR COLD. SHOULD BE APPLIED TO ALL SEEDING OPERATIONS, OTHER PLANT MATERIALS WHICH DO NOT PROVIDE ADEQUATE SOIL PROTECTION BY THEMSELVES, AND BARE AREAS WHICH CANNOT BE SEEDED DUE TO THE SEASON BUT WHICH STILL NEED PROTECTION TO PREVENT SOIL LOSS.

3.36 SOIL STABILIZATION BLANKETS AND MATTING: THE INSTALLATION OF A PROTECTIVE BLANKET (TREATMENT 1) OR A SOIL STABILIZATION MAT (TREATMENT 2) ON A PREPARED PLANTING OF A STEEP SLOPE, CHANNEL OR SHORELINE.

C. MANAGEMENT STRATEGIES/MINIMUM STANDARDS

1. CONSTRUCTION SHALL BE PLANNED SO THAT GRADING OPERATIONS CAN BEGIN AND END AS SOON AS POSSIBLE.
2. THE CONTRACTOR SHALL BE RESPONSIBLE FOR THE INSTALLATION, MAINTENANCE, AND REMOVAL OF ALL EROSION AND SEDIMENT CONTROL PRACTICES.
3. PERMANENT OR TEMPORARY SOIL STABILIZATION SHALL BE APPLIED TO DENUDED AREAS WITHIN SEVEN DAYS AFTER FINAL GRADE IS REACHED ON ANY PORTION OF THE SITE. TEMPORARY SOIL STABILIZATION SHALL BE APPLIED WITHIN SEVEN DAYS TO DENUDED AREAS THAT MAY NOT BE AT FINAL GRADE BUT WILL REMAIN DORMANT FOR LONGER THAN 30 DAYS. PERMANENT STABILIZATION SHALL BE APPLIED TO AREAS THAT ARE TO BE LEFT DORMANT FOR MORE THAN ONE YEAR
4. DURING CONSTRUCTION OF THE PROJECT, SOIL STOCKPILES AND BORROW AREAS SHALL BE STABILIZED OR PROTECTED WITH SEDIMENT TRAPPING MEASURES. THE APPLICANT IS RESPONSIBLE FOR THE TEMPORARY PROTECTION AND PERMANENT STABILIZATION OF ALL SOIL STOCKPILES ON SITE AS WELL AS BORROW AREAS AND SOIL INTENTIONALLY TRANSPORTED FROM THE PROJECT SITE.
5. A PERMANENT VEGETATIVE COVER SHALL BE ESTABLISHED ON DENUDED AREAS NOT OTHERWISE PERMANENTLY STABILIZED. PERMANENT VEGETATION SHALL NOT BE CONSIDERED ESTABLISHED UNTIL A GROUND COVER IS ACHIEVED THAT IS UNIFORM, MATURE ENOUGH TO SURVIVE AND WILL INHIBIT EROSION.
6. SEDIMENT BASINS AND TRAPS, PERIMETER DIKES, SEDIMENT BARRIERS AND OTHER MEASURES INTENDED TO TRAP SEDIMENT SHALL BE CONSTRUCTED AS A FIRST STEP IN ANY LAND-DISTURBING ACTIVITY AND SHALL BE MADE FUNCTIONAL BEFORE UPSLOPE LAND DISTURBANCE TAKES PLACE.
7. STABILIZATION MEASURES SHALL BE APPLIED TO EARTHEN STRUCTURES SUCH AS DAMS, DIKES AND DIVERSIONS IMMEDIATELY AFTER INSTALLATION.
8. SURFACE RUNOFF FROM DISTURBED AREAS THAT IS COMPRISED OF FLOW FROM DRAINAGE AREAS GREATER THAN OR EQUAL TO THREE ACRES SHALL BE CONTROLLED BY A SEDIMENT BASIN. THE MINIMUM STORAGE CAPACITY OF A SEDIMENT BASIN SHALL BE 134 CUBIC YARDS PER ACRE OF DRAINAGE AREA. THE OUTFALL SYSTEM SHALL, AT A MINIMUM, MAINTAIN THE STRUCTURAL INTEGRITY OF THE BASIN DURING A 25-YEAR STORM OF 24-HOUR DURATION. RUNOFF COEFFICIENTS USED IN RUNOFF CALCULATIONS SHALL CORRESPOND TO A BARE EARTH CONDITION OR THOSE CONDITIONS EXPECTED TO EXIST WHILE THE SEDIMENT BASIN IS UTILIZED.
9. CUT AND FILL SLOPES SHALL BE DESIGNED AND CONSTRUCTED IN A MANNER THAT WILL MINIMIZE EROSION. SLOPES THAT ARE FOUND TO BE ERODING EXCESSIVELY WITHIN ONE YEAR OF PERMANENT STABILIZATION SHALL BE PROVIDED WITH ADDITIONAL SLOPE STABILIZING MEASURES UNTIL THE PROBLEM IS CORRECTED.
10. CONCENTRATED RUNOFF SHALL NOT FLOW DOWN CUT OR FILL SLOPES UNLESS CONTAINED WITHIN AN ADEQUATE TEMPORARY OR PERMANENT CHANNEL, FLUME OR SLOPE DRAIN STRUCTURE.
11. WHENEVER WATER SEEPS FROM A SLOPE FACE, ADEQUATE DRAINAGE OR OTHER PROTECTION SHALL BE PROVIDED.
12. ALL STORM SEWER INLETS THAT ARE MADE OPERABLE DURING CONSTRUCTION SHALL BE PROTECTED SO THAT SEDIMENT-LADEN WATER CANNOT ENTER THE CONVEYANCE SYSTEM WITHOUT FIRST BEING FILTERED OR OTHERWISE TREATED TO REMOVE SEDIMENT.
13. BEFORE NEWLY CONSTRUCTED STORMWATER CONVEYANCE CHANNELS OR PIPES ARE MADE OPERATIONAL, ADEQUATE OUTLET PROTECTION AND ANY REQUIRED TEMPORARY OR PERMANENT CHANNEL LINING SHALL BE INSTALLED IN BOTH THE CONVEYANCE CHANNEL AND RECEIVING CHANNEL.
14. WHEN WORK IN A LIVE WATERCOURSE IS PERFORMED, PRECAUTIONS SHALL BE TAKEN TO MINIMIZE ENCROACHMENT, CONTROL SEDIMENT TRANSPORT AND STABILIZE THE WORK AREA TO THE GREATEST EXTENT POSSIBLE DURING CONSTRUCTION. NONERODIBLE MATERIAL SHALL BE USED FOR THE CONSTRUCTION OF CAUSEWAYS AND COFFERDAMS. EARTHEN FILL MAY BE USED FOR THESE STRUCTURES IF ARMORED BY NONERODIBLE COVER MATERIALS.
15. WHEN A LIVE WATERCOURSE MUST BE CROSSED BY CONSTRUCTION VEHICLES MORE THAN TWICE IN ANY SIX-MONTH PERIOD, A TEMPORARY VEHICULAR STREAM CROSSING CONSTRUCTED OF NONERODIBLE MATERIAL SHALL BE PROVIDED.
16. ALL APPLICABLE FEDERAL, STATE AND LOCAL REGULATIONS PERTAINING TO WORKING IN OR CROSSING LIVE WATERCOURSES SHALL BE MET.
17. THE BED AND BANKS OF A WATERCOURSE SHALL BE STABILIZED IMMEDIATELY AFTER WORK IN THE WATERCOURSE IS COMPLETED.
18. UNDERGROUND UTILITY LINES SHALL BE INSTALLED IN ACCORDANCE WITH THE FOLLOWING STANDARDS IN ADDITION TO OTHER APPLICABLE CRITERIA:
A. NO MORE THAN 500 LINEAR FEET OF TRENCH MAY BE OPENED AT ONE TIME.
B. EXCAVATED MATERIAL SHALL BE PLACED ON THE UPHILL SIDE OF TRENCHES.
C. EFFLUENT FROM DEWATERING OPERATIONS SHALL BE FILTERED OR PASSED THROUGH AN APPROVED SEDIMENT TRAPPING DEVICE, OR BOTH, AND DISCHARGED IN A MANNER THAT DOES NOT ADVERSELY AFFECT FLOWING STREAMS OR OFF-SITE PROPERTY.
D. MATERIAL USED FOR BACKFILLING TRENCHES SHALL BE PROPERLY COMPACTED IN ORDER TO MINIMIZE EROSION AND PROMOTE STABILIZATION.
E. RESTABILIZATION SHALL BE ACCOMPLISHED IN ACCORDANCE WITH THESE REGULATIONS.
F. APPLICABLE SAFETY REGULATIONS SHALL BE COMPLIED WITH.
19. WHERE CONSTRUCTION VEHICLE ACCESS ROUTES INTERSECT PAVED OR PUBLIC ROADS, PROVISIONS SHALL BE MADE TO MINIMIZE THE TRANSPORT OF SEDIMENT BY VEHICULAR TRACKING ONTO THE PAVED SURFACE. WHERE SEDIMENT IS TRANSPORTED ONTO A PAVED OR PUBLIC ROAD SURFACE, THE ROAD SURFACE SHALL BE CLEANED THOROUGHLY AT THE END OF EACH DAY. SEDIMENT SHALL BE REMOVED FROM THE ROADS BY SHOVELING OR SWEEPING AND TRANSPORTED TO A SEDIMENT CONTROL DISPOSAL AREA. STREET WASHING SHALL BE ALLOWED ONLY AFTER SEDIMENT IS REMOVED IN THIS MANNER. THIS PROVISION SHALL APPLY TO INDIVIDUAL DEVELOPMENT LOTS AS WELL AS TO LARGER LAND-DISTURBING ACTIVITIES.
20. ALL TEMPORARY EROSION AND SEDIMENT CONTROL MEASURES SHALL BE REMOVED WITHIN 30 DAYS AFTER FINAL SITE STABILIZATION OR AFTER THE TEMPORARY MEASURES ARE NO LONGER NEEDED, UNLESS OTHERWISE AUTHORIZED BY THE LOCAL PROGRAM AUTHORITY. TRAPPED SEDIMENT AND THE DISTURBED SOIL AREAS RESULTING FROM THE DISPOSITION OF TEMPORARY MEASURES SHALL BE PERMANENTLY STABILIZED TO PREVENT FURTHER EROSION AND SEDIMENTATION. 21. PROPERTIES AND WATERWAYS DOWNSTREAM FROM DEVELOPMENT SITES SHALL BE PROTECTED FROM SEDIMENT DEPOSITION, EROSION AND DAMAGE DUE TO INCREASES IN VOLUME, VELOCITY AND PEAK FLOW RATE OF STORMWATER RUNOFF FOR THE STATED FREQUENCY STORM OF 24-HOUR DURATION IN ACCORDANCE WITH THE FOLLOWING STANDARDS AND CRITERIA:
A. CONCENTRATED STORMWATER RUNOFF LEAVING A DEVELOPMENT SITE SHALL BE DISCHARGED DIRECTLY INTO AN ADEQUATE NATURAL OR MAN-MADE RECEIVING CHANNEL, PIPE OR STORM SEWER SYSTEM. FOR THOSE SITES WHERE RUNOFF IS DISCHARGED INTO A PIPE OR PIPE SYSTEM, DOWNSTREAM STABILITY ANALYSES AT THE OUTFALL OF THE PIPE OR PIPE SYSTEM SHALL BE PERFORMED.
B. ADEQUACY OF ALL CHANNELS AND PIPES SHALL BE VERIFIED IN THE FOLLOWING MANNER:
(1) THE APPLICANT SHALL DEMONSTRATE THAT THE TOTAL DRAINAGE AREA TO THE POINT OF ANALYSIS WITHIN THE CHANNEL IS ONE HUNDRED TIMES GREATER THAN THE CONTRIBUTING DRAINAGE AREA OF THE PROJECT IN QUESTION; OR
(2) (A) NATURAL CHANNELS SHALL BE ANALYZED BY THE USE OF A TWO-YEAR STORM TO VERIFY THAT STORMWATER WILL NOT OVERTOP CHANNEL BANKS NOR CAUSE EROSION OF CHANNEL BED OR BANKS.
(B) ALL PREVIOUSLY CONSTRUCTED MAN-MADE CHANNELS SHALL BE ANALYZED BY THE USE OF A TEN-YEAR STORM TO VERIFY THAT STORMWATER WILL NOT OVERTOP ITS BANKS AND BY THE USE OF A TWO-YEAR STORM TO DEMONSTRATE THAT STORMWATER WILL NOT CAUSE EROSION OF CHANNEL BED OR BANKS; AND
(C) PIPES AND STORM SEWER SYSTEMS SHALL BE ANALYZED BY THE USE OF A TEN-YEAR STORM TO VERIFY THAT STORMWATER WILL BE CONTAINED WITHIN THE PIPE OR SYSTEM.
C. IF EXISTING NATURAL RECEIVING CHANNELS OR PREVIOUSLY CONSTRUCTED MAN-MADE CHANNELS OR PIPES ARE NOT ADEQUATE, THE APPLICANT SHALL:
(1) IMPROVE THE CHANNELS TO A CONDITION WHERE A TEN-YEAR STORM WILL NOT OVERTOP THE BANKS AND A TWO-YEAR STORM WILL NOT CAUSE EROSION TO THE CHANNEL BED OR BANKS; OR
(2) IMPROVE THE PIPE OR PIPE SYSTEM TO A CONDITION WHERE THE TEN-YEAR STORM IS CONTAINED WITHIN THE APPURTENANCES; OR
(3) DEVELOP A SITE DESIGN THAT WILL NOT CAUSE THE PRE-DEVELOPMENT PEAK RUNOFF RATE FROM A TWO-YEAR STORM TO INCREASE WHEN RUNOFF OUTFALLS INTO A NATURAL CHANNEL OR WILL NOT CAUSE THE PRE-DEVELOPMENT PEAK RUNOFF RATE FROM A TEN-YEAR STORM TO INCREASE WHEN RUNOFF OUTFALLS INTO A MAN-MADE CHANNEL; OR
(4) PROVIDE A COMBINATION OF CHANNEL IMPROVEMENT, STORMWATER DETENTION OR OTHER MEASURES WHICH IS SATISFACTORY TO THE PLAN-APPROVING AUTHORITY TO PREVENT DOWNSTREAM EROSION.
D. THE APPLICANT SHALL PROVIDE EVIDENCE OF PERMISSION TO MAKE THE IMPROVEMENTS.
E. ALL HYDROLOGIC ANALYSES SHALL BE BASED ON THE EXISTING WATERSHED CHARACTERISTICS AND THE ULTIMATE DEVELOPMENT OF THE SUBJECT PROJECT.
F. IF THE APPLICANT CHOOSES AN OPTION THAT INCLUDES STORMWATER DETENTION, HE SHALL OBTAIN APPROVAL FROM THE LOCALITY OF A PLAN FOR MAINTENANCE OF THE DETENTION FACILITIES. THE PLAN SHALL SET FORTH THE MAINTENANCE REQUIREMENTS OF THE FACILITY AND THE PERSON RESPONSIBLE FOR PERFORMING THE MAINTENANCE.
G. OUTFALL FROM A DETENTION FACILITY SHALL BE DISCHARGED TO A RECEIVING CHANNEL, AND ENERGY DISSIPATORS SHALL BE PLACED AT THE OUTFALL OF ALL DETENTION FACILITIES AS NECESSARY TO PROVIDE A STABILIZED TRANSITION FROM THE FACILITY TO THE RECEIVING CHANNEL.
H. ALL ON-SITE CHANNELS MUST BE VERIFIED TO BE ADEQUATE.
I. INCREASED VOLUMES OF SHEET FLOWS THAT MAY CAUSE EROSION OR SEDIMENTATION ON ADJACENT PROPERTY SHALL BE DIVERTED TO A STABLE OUTLET, ADEQUATE CHANNEL, PIPE OR PIPE SYSTEM, OR TO A DETENTION FACILITY.
J. IN APPLYING THESE STORMWATER MANAGEMENT CRITERIA, INDIVIDUAL LOTS OR PARCELS IN A RESIDENTIAL, COMMERCIAL OR INDUSTRIAL DEVELOPMENT SHALL NOT BE CONSIDERED TO BE SEPARATE DEVELOPMENT PROJECTS. INSTEAD, THE DEVELOPMENT, AS A WHOLE, SHALL BE CONSIDERED TO BE A SINGLE DEVELOPMENT PROJECT. HYDROLOGIC PARAMETERS THAT REFLECT THE ULTIMATE DEVELOPMENT CONDITION SHALL BE USED IN ALL ENGINEERING CALCULATIONS.
K. ALL MEASURES USED TO PROTECT PROPERTIES AND WATERWAYS SHALL BE EMPLOYED IN A MANNER WHICH MINIMIZES IMPACTS ON THE PHYSICAL, CHEMICAL AND BIOLOGICAL INTEGRITY OF RIVERS, STREAMS AND OTHER WATERS OF THE STATE.

D. MAINTENANCE:
1. ALL EROSION AND SEDIMENT CONTROL STRUCTURES AND SYSTEMS SHALL BE MAINTAINED, INSPECTED AND REPAIRED AS NEEDED TO ENSURE CONTINUED PERFORMANCE OF THEIR INTENDED FUNCTION. ALL EROSION AND SEDIMENT CONTROL MEASURES SHALL BE CHECKED AT THE END OF EACH DAY AND AFTER EVERY RAINFALL EVENT.
2. DAMAGE TO EROSION CONTROL MEASURES CAUSED BY CONSTRUCTION TRAFFIC OR OTHER ACTIVITY SHALL BE REPAIRED BEFORE THE END OF EACH WORKING DAY.
3. MAINTAIN ALL SEEDED AREAS UNTIL A UNIFORM STAND IS ACCEPTED.
4. BOTH TEMPORARY AND PERMANENT ROADS AND PARKING AREAS MAY REQUIRE PERIODIC TOP DRESSING WITH NEW GRAVEL.
5. SILT FENCE BARRIERS SHALL BE CHECKED DAILY FOR UNDERMINING OR DETERIORATION OF THE FABRIC. SEDIMENT SHALL BE REMOVED WHEN THE LEVEL REACHES HALF WAY TO THE TOP OF THE BARRIER.
6. SEDIMENT SHALL BE REMOVED FROM AROUND THE INLET PROTECTION TRAP STRUCTURE AND RESTORED TO ITS ORIGINAL DIMENSIONS WHEN THE SEDIMENT HAS ACCUMULATED TO ONE-HALF THE DESIGN DEPTH OF THE TRAP OR BASIN. THE TRAP OR BASIN STRUCTURES SHALL BE REMOVED AND THE AREA STABILIZED WHEN THE REMAINING DRAINAGE AREA HAS BEEN PROPERLY STABILIZED.
7. DAMAGE TO THE SLOPES, OR OUTLET AREAS MUST BE REPAIRED IMMEDIATELY.
8. THE FILTERING DEVICES MUST BE INSPECTED FREQUENTLY AND REPAIRED OR REPLACED ONCE THE SEDIMENT BUILD-UP PREVENTS THE STRUCTURE FROM FUNCTIONING AS DESIGNED. THE ACCUMULATED SEDIMENT, WHICH IS REMOVED FROM A DEWATERING DEVICE, MUST BE SPREAD ON-SITE AND STABILIZED OR DISPOSED OF AT AN APPROVED DISPOSAL SITE.

TEMPORARY SEEDING SCHEDULE (TS)

PLANTING DATES	SPECIES	RATE (LBS./ACRE)
SEPTEMBER 1 - FEBRUARY 15	50/50 MIX OF ANNUAL RYEGRASS (LOLIUM MULTI-FLORUM) & CEREAL (WINTER) RYE (SECALE CEREALE)	50-100
FEBRUARY 16 - APRIL 30	ANNUAL RYEGRASS (LOLIUM MULTI-FLORUM)	60-100
MAY 1 - AUGUST 31	GERMAN MILLET (SETARIA ITALICA)	50

PERMANENT SEEDING SCHEDULE (PS)

MINIMUM LAWN CARE	TOTAL POUNDS PER ACRE
COMMERCIAL OR RESIDENTIAL	175 - 200 LBS
KENTUCKY 31 OR TURF-TYPE TALL FESCUE	95 - 100 %
IMPROVED PERENNIAL RYEGRASS	0 - 5 %
KENTUCKY BLUE GRASS	0 - 5 %
	200 - 250 LBS
HIGH MAINTENANCE LAWN CARE	
KENTUCKY 31 OR TURF-TYPE TALL FESCUE	100 %
GENERAL SLOPE & ROAD SIDE DITCHES (3:1 OR LESS)	
KENTUCKY 31 FESCUE	128 LBS
RED TOP GRASS	2 LBS
SEASONAL NURSE CROP *	20 LBS
	150 LBS
LOW MAINTENANCE SLOPE (STEEPER THAN 3:1)	
KENTUCKY 31 FESCUE	108 LBS
RED TOP GRASS	2 LBS
SEASONAL NURSE CROP *	20 LBS
CROWNVETCH **	20 LBS
	150 LBS

* USE SEASONAL NURSE CROP IN ACCORDANCE WITH SEEDING DATES AS STATED BELOW

FEBRUARY 16 - APRIL	ANNUAL RYE
MAY 1 - AUGUST 15	FOXTAIL MILLET
AUGUST 16 - OCTOBER	ANNUAL RYE
NOVEMBER - FEBRUARY 15	WINTER RYE

** SUBSTITUTE SERICEA LESPEDEZA FOR CROWNVETCH EAST OF FARMVILLE, VIRGINIA (MAY THROUGH SEPTEMBER USE HULLED SERICEA, ALL OTHER PERIODS USE UNHULLEDSERICEA). IF FLATPEA IS USED IN LIEU OF CROWNVETCH, INCREASE RATE TO 30 LBS/ACRE. ALL LEGUME SEED MUST BE PROPERLY INOCULATED. WEEPING LOVEGRASS MAY BE ADDED TO ANY SLOPE OR LOW-MAINTENANCE MIX DURING WARMER SEEDING PERIODS; ADD 10-20 LBS/ACRE IN MIXES.

LIME & FERTILIZER SPECIFICATIONS

LIME
PIEDMONT AND APPALACHIAN REGION:
2 TONS/ACRE PULVERIZED AGRICULTURAL GRADE LIMESTONE (90 LBS/1,000 SQ. FT.)
NOTE: AND AGRICULTURAL GRADE OF LIMESTONE SHOULD ALWAYS BE USED.

FERTILIZER
MIXED GRASSES AND LEGUMES:
1,000 LBS/ACRE 10-20-10 OR EQUIVALENT NUTRIENTS (23 LBS/1,000 SQ. FT.)
LEGUME STANDS ONLY:
1,000 LBS/ACRE 5-20-10 (23 LBS/1,000 SQ.FT) IS PREFERRED; HOWEVER, 1,000LBS/ACRE OF 10-20-10 OR EQUIVALENT MAY BE USED.
GRASS STANDS ONLY:
1,000 LBS/ACRE 10-21-10 OR EQUIVALENT NUTRIENTS, (23 LBS/1,000 SQ. FT.) OTHER FERTILIZER FORMULATIONS, INCLUDING SLOW-RELEASE SOURCES OF NITROGEN (PREFERRED FROM A WATER QUALITY STANDPOINT), MAY BE USED PROVIDED THEY CAN SUPPLY THE SAME AMOUNTS AND PROPORTIONS OF PLANT NUTRIENTS.

INCORPORATION
LIME AND FERTILIZER SHALL BE INCORPORATED INTO THE TOP 4-6 INCHES OF SOIL BY DISCING OR OTHER MEANS WHENEVER POSSIBLE. FOR EROSION CONTROL, WHEN APPLYING LIME AND FERTILIZER WITH A HYDROSEEDER, APPLY TO A ROUGH, LOOSE SURFACE.

VIII. SEQUENCE OF CONSTRUCTION

1. INSTALL E&S MEASURES AS REQUIRED WITH THE PROGRESSION OF CONSTRUCTION.
2. APPLY TEMPORARY SEEDING TO AREAS THAT STAY DENUDED AND UNTOUCHED FOR THIRTY DAYS.
3. REMOVE ALL TEMPORARY STRUCTURES INCLUDING SILT FENCES UPON APPROVAL BY THE CITY E&S ADMINISTRATOR.
4. ALL EROSION AND SEDIMENT CONTROL/STORMWATER MANAGEMENT MEASURES MUST BE DEWATERED PRIOR TO ISSUANCE OF CERTIFICATE OF OCCUPANCY.
5. ALL TEMPORARY EROSION AND SEDIMENT CONTROL MEASURES MUST BE REMOVED WITHIN THIRTY DAYS OF PERMANENT STABILIZATION OF THE SITE.

IX. ENFORCEMENT

THE CITY OF LYNCHBURG RETAINS THE AUTHORITY TO ADD OR DELETE EROSION CONTROL MEASURES

X. CONTACT PARTY FOR E&S IMPLEMENTATION

SCOTT PARKINS, PE
(434) 455-4248

CULVERT INLET SEDIMENT TRAP

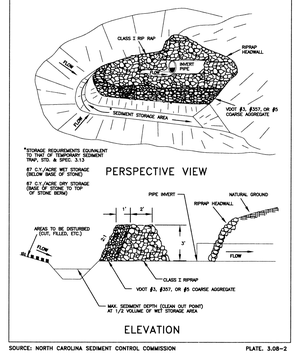

SOURCE: NORTH CAROLINA SEDIMENT CONTROL COMMISSION PLATE. 3.08-2

TYPICAL ORIENTATION OF TREATMENT – 1 (SOIL STABILIZATION BLANKET)

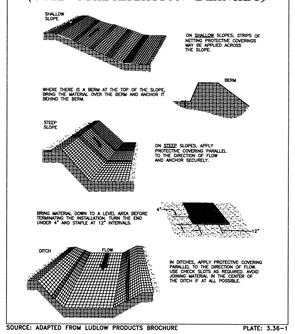

SOURCE: ADAPTED FROM LUDLOW PRODUCTS BROCHURE PLATE: 3.36-1

CURB INLET PROTECTION WITH 2-INCH X 4-INCH WOODEN WEIR

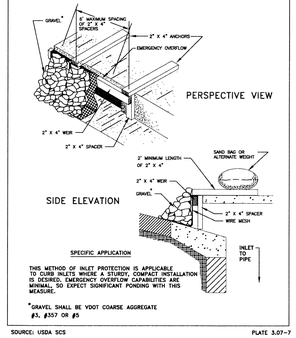

SOURCE: USDA SCS PLATE 3.07-7

NO.	REVISION	BY	DATE
2	REVISED TO ADDRESS CITY COMMENTS RECEIVED 4-8-14	JLW	5-6-14
1	ADDED SANITARY AND STORM SEWER DESIGN	GLM	3-12-14

COMMONWEALTH OF VIRGINIA
JAMES L. WHITE
Lic. No. 47808
5-6-14
PROFESSIONAL ENGINEER

WARNER WHITE
ENGINEERING PARTNERS
118 CORNERSTONE STREET
LYNCHBURG, VIRGINIA 24502
PHONE: 434-534-3201 FAX: 434-534-3202

DRAWN BY: GLM
DESIGNED BY: JLW
REVIEWED BY: TJW
PROJECT No. 12030.00
SCALE: GRAPHIC

PROJECT: CITY PROJECTS: #12024-W
PRINCETON CIRCLE WATER LINE, SANITARY SEWER & STORM SEWER REPLACEMENT PLAN
LYNCHBURG, VIRGINIA

TITLE: EROSION & SEDIMENT CONTROL NARRATIVE

DATE: REV. 5-6-14 2-28-13
DRAWING No: EC2
SHEET NUMBER: 13 OF 15

FILE: P:\2012\12030.00 Princeton Circle Water Mains\Utility Plan\12030EC2.dwg

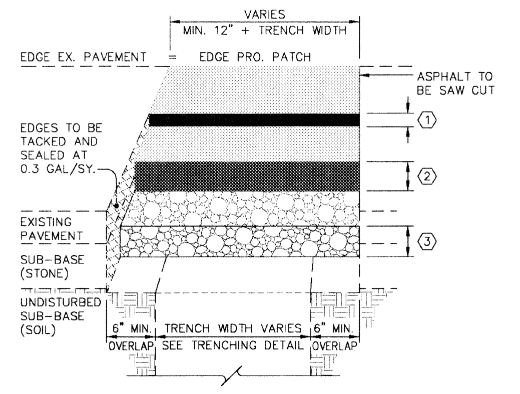

PATCH DESIGN FOR ASPHALT STREETS

TYPE STREET	ARTERIAL and INDUSTRIAL	COLLECTOR	RESIDENTIAL
TYPE PATCH	TYPE A	TYPE B	TYPE C
①	2" SM-12.5D	2" SM-12.5D	2" SM-12.5A
②	8" BM25	6" BM25	4" BM25
③	7" VDOT NO.21A	4" VDOT NO.21A	4" VDOT NO.21A
PATCH DEPTH	TOTAL = 17"	TOTAL = 12"	TOTAL = 10"

NOTES:
1. PAVEMENT SHALL BE AS SHOWN UNLESS OTHERWISE SPECIFIED.

THE CITY OF LYNCHBURG
TRENCH PATCH ASPHALT STREETS – TYPE A,B,& C
SCALE: NOT TO SCALE | DETAIL # 25.18 | REVISION DATE: 12-14-2013 | SHEET # 1 OF 1
USE WITH THE CITY OF LYNCHBURG STANDARD SPECIFICATIONS ONLY

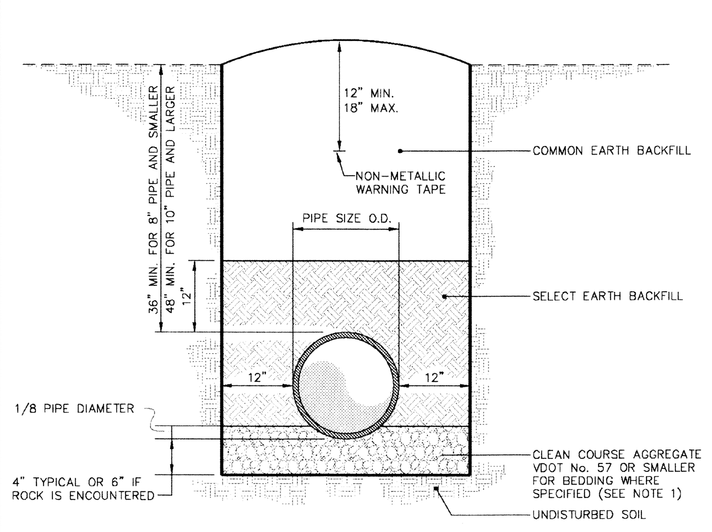

NOTES:
1. BEDDING SHALL BE REQUIRED FOR WATER LINES 16" IN DIAMETER AND LARGER OR IF ROCK IS ENCOUNTERED.
2. EXTRA DEPTH EXCAVATION SHALL BE PAID FOR AS ANYTHING BEYOND 4' OF COVER TO TOP OF PIPE.
3. ANY EXCAVATION BEYOND TRENCH LIMITS SHOWN ON DETAIL SHALL BE AT THE CONTRACTOR'S EXPENSE.

THE CITY OF LYNCHBURG
WATER LINE TRENCH DETAIL
SCALE: NOT TO SCALE | DETAIL # 26.01 | REVISION DATE: 12-14-2013 | SHEET # 1 OF 1
USE WITH THE CITY OF LYNCHBURG STANDARD SPECIFICATIONS ONLY

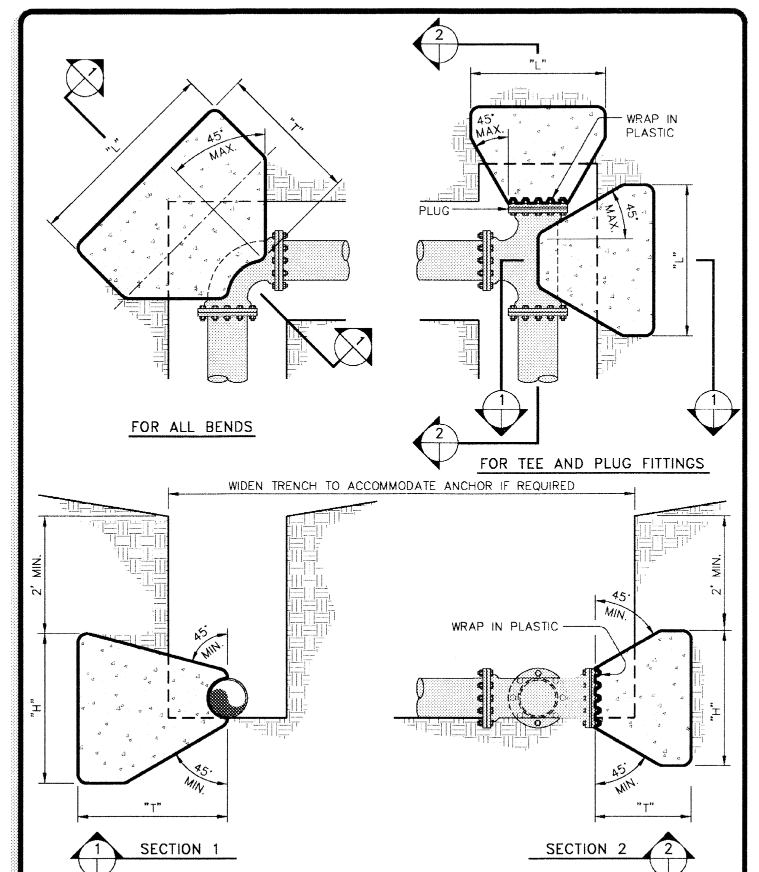

THE CITY OF LYNCHBURG
TYPE "F" HORIZONTAL ANCHOR BLOCKING
SCALE: NOT TO SCALE | DETAIL # 26.02 | REVISION DATE: 12-14-2013 | SHEET # 1 OF 3
USE WITH THE CITY OF LYNCHBURG STANDARD SPECIFICATIONS ONLY

TYPE "F" HORIZONTAL ANCHOR BLOCK DATUM

TYPE FITTING	PIPE SIZE INCHES	DIMENSIONS (Ft.) "L"	"H"	"T"	VOL. CONC. CU. YARDS
TEST PRESSURE = 150 P.S.I. & BELOW					
11 1/4°	6	1.5	2	2.5	0.19
22 1/2°	6	1.5	2	2.52	0.19
45°	6	2	2.25	2.6	0.26
90°	6	2.5	2.5	3.01	0.40
TEE	6	2	2.25	2.5	0.25
PLUG	6	2	2.25	2.5	0.25
11 1/4°	8	1.66	2.16	2.67	0.23
22 1/2°	8	1.66	2.16	2.69	0.23
45°	8	2.66	2.66	2.77	0.41
90°	8	3.66	3.16	3.21	0.75
TEE	8	3.16	2.91	2.66	0.50
PLUG	8	3.16	2.91	2.66	0.50
11 1/4°	12	2	2.5	3	0.33
22 1/2°	12	2.5	2.75	3.02	0.44
45°	12	4	3.5	3.12	0.87
90°	12	5.5	4.25	3.62	1.63
TEE	12	4.5	3.75	3	0.99
PLUG	12	4.5	3.75	3	0.99
TEST PRESSURE = 151 P.S.I. to 200 P.S.I.					
11 1/4°	6	1.5	2	2.5	0.19
22 1/2°	6	1.5	2	2.52	0.19
45°	6	2	2.55	2.6	0.29
90°	6	3	2.75	3.01	0.52
TEE	6	2.5	2.5	2.5	0.34
PLUG	6	2.5	2.5	2.5	0.34
11 1/4°	8	1.66	2.16	2.67	0.23
22 1/2°	8	2.16	2.41	2.69	0.31
45°	8	3.16	2.91	2.77	0.52
90°	8	4.16	3.41	3.21	0.90
TEE	8	3.66	3.16	2.66	0.62
PLUG	8	3.66	3.16	2.66	0.62
11 1/4°	12	2	2.5	3	0.33
22 1/2°	12	3	3	3.02	0.56
45°	12	4.5	3.75	3.12	1.03
90°	12	6.5	4.75	3.62	2.14
TEE	12	5.5	4.25	3	1.35
PLUG	12	5.5	4.25	3	1.35
TEST PRESSURE = 201 P.S.I. to 250 P.S.I.					
11 1/4°	6	1.5	2	2.5	0.19
22 1/2°	6	1.5	2	2.52	0.19
45°	6	2.5	2.5	2.6	0.35
90°	6	3.5	3	3.01	0.64
TEE	6	3	2.75	2.5	0.43
PLUG	6	3	2.75	2.5	0.43
11 1/4°	8	1.66	2.16	2.67	0.23
22 1/2°	8	2.16	2.41	2.69	0.31
45°	8	3.66	3.16	2.77	0.64
90°	8	4.66	3.66	3.21	1.07
TEE	8	4.16	3.41	2.66	0.75
PLUG	8	4.16	3.41	2.66	0.75
11 1/4°	12	2.5	2.75	3	0.44
22 1/2°	12	3.5	3.25	3.02	0.69
45°	12	5.5	4.25	3.12	1.41
90°	12	7.5	5.25	3.62	2.71
TEE	12	6	4.5	3	1.56
PLUG	12	6	4.5	3	1.56

THE CITY OF LYNCHBURG
TYPE "F" HORIZONTAL ANCHOR BLOCKING
SCALE: NOT TO SCALE | DETAIL # 26.02 | REVISION DATE: 12-14-2013 | SHEET # 2 OF 3
USE WITH THE CITY OF LYNCHBURG STANDARD SPECIFICATIONS ONLY

TYPE "F" HORIZONTAL ANCHOR BLOCK DATUM

TYPE FITTING	PIPE SIZE INCHES	DIMENSIONS (Ft.) "L"	"H"	"T"	VOL. CONC. CU. YARDS
TEST PRESSURE = 150 P.S.I. & BELOW					
11 1/4°	16	3	2	3	0.48
22 1/2°	16	4	3	3	0.93
45°	16	6	4	3	1.81
90°	16	8	5.5	3.75	3.92
TEE	16	8	5.5	2.67	3.02
PLUG	16	8	5.5	2.67	3.02
11 1/4°	24	4.5	3	4	1.31
22 1/2°	24	6	4.5	4	2.56
45°	24	8.5	6.25	4	4.97
90°	24	12	8	4.5	9.84
TEE	24	12	8	4	8.94
PLUG	24	12	8	4	8.94
TEST PRESSURE = 151 P.S.I. to 200 P.S.I.					
11 1/4°	16	3	2.67	3	0.63
22 1/2°	16	4.5	3.5	3	1.20
45°	16	7.5	4.25	3	2.40
90°	16	10	5.75	3.75	5.11
TEE	16	10	5.75	5	6.46
PLUG	16	10	5.75	5	6.46
11 1/4°	24	5	3.5	4	1.68
22 1/2°	24	7	5	4	3.30
45°	24	10	7	4	6.54
90°	24	13	10	4.5	13.31
TEE	24	13	10	4.5	13.31
PLUG	24	13	10	4.5	13.31
TEST PRESSURE = 201 P.S.I. to 250 P.S.I.					
11 1/4°	16	3.5	3	3	0.81
22 1/2°	16	5.5	3.67	3	1.53
45°	16	7.5	5.25	3	2.95
90°	16	12	6	3.75	6.38
TEE	16	12	6	4	6.72
PLUG	16	12	6	4	6.72
11 1/4°	24	6	3.75	4	2.14
22 1/2°	24	8	5.5	4	4.13
45°	24	12	7.25	4	8.11
90°	24	14	11.5	4.75	17.21
TEE	24	14	11.5	4.75	17.21
PLUG	24	14	11.5	4.75	17.21

THE CITY OF LYNCHBURG
TYPE "F" HORIZONTAL ANCHOR BLOCKING
SCALE: NOT TO SCALE | DETAIL # 26.02 | REVISION DATE: 12-14-2013 | SHEET # 3 OF 3
USE WITH THE CITY OF LYNCHBURG STANDARD SPECIFICATIONS ONLY

TIE ROD ANCHORS DATUM

PIPE SIZE (INCHES)	ROD DIAMETER (INCHES)	NUMBER OF A307 RODS REQUIRED
TEST PRESSURE = 150 P.S.I. & BELOW		
6	3/4	2
8	3/4	2
10	3/4	2
12	3/4	4
16	3/4	6
20	3/4	8
24	1	8
30	1	10
TEST PRESSURE = 151 P.S.I. to 200 PSI		
6	3/4	2
8	3/4	2
10	3/4	4
12	3/4	6
16	3/4	8
20	3/4	12
24	1	10
30	1	14
TEST PRESSURE = 201 P.S.I. to 250 P.S.I.		
6	3/4	4
8	3/4	4
10	3/4	4
12	3/4	6
16	3/4	12
20	3/4	14
24	1	16
30	1	20

TIE RODS SHALL BE A307 CADMIUM COATED TIE RODS.

THE CITY OF LYNCHBURG
TIE ROD ANCHORS DATUM CHART
SCALE: NOT TO SCALE | DETAIL # 26.03 | REVISION DATE: 12-14-2013 | SHEET # 1 OF 1
USE WITH THE CITY OF LYNCHBURG STANDARD SPECIFICATIONS ONLY

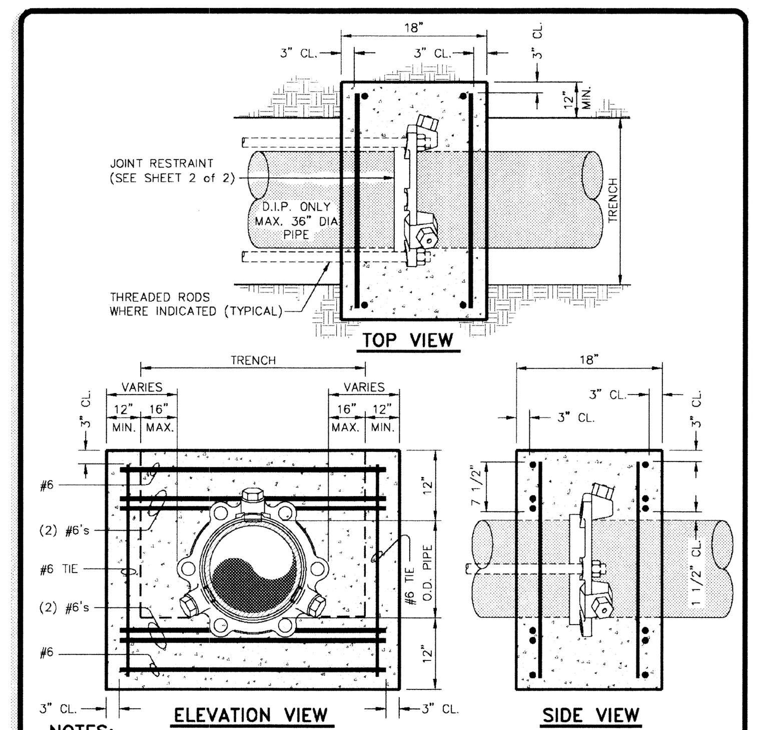

NOTES:
1. CONCRETE SHALL BE 3000 P.S.I.
2. REINFORCING BARS SHALL BE DEFORMED, AND TIED TOGETHER.
3. TRENCH BOTTOM WIDTH IN VICINITY OF THRUST BLOCK(S) INSTALLATION SHALL BE THE MINIMUM WIDTH.
4. BACKFILL AND COMPACT IN 6" LAYERS.
5. PLACE THRUST COLLAR ON ONE FULL JOINT OF PIPE.
6. LAST JOINT OF PIPE WITH THRUST COLLAR TO BE MECHANICAL JOINT PIPE.
7. PLACE RESTRAINED JOINT THRUST RING 4' FROM PLUG END OF PIPE.

THE CITY OF LYNCHBURG
THRUST COLLAR & BLOCKING DETAIL
SCALE: NOT TO SCALE | DETAIL # 26.04 | REVISION DATE: 12-14-2013 | SHEET # 1 OF 2
USE WITH THE CITY OF LYNCHBURG STANDARD SPECIFICATIONS ONLY

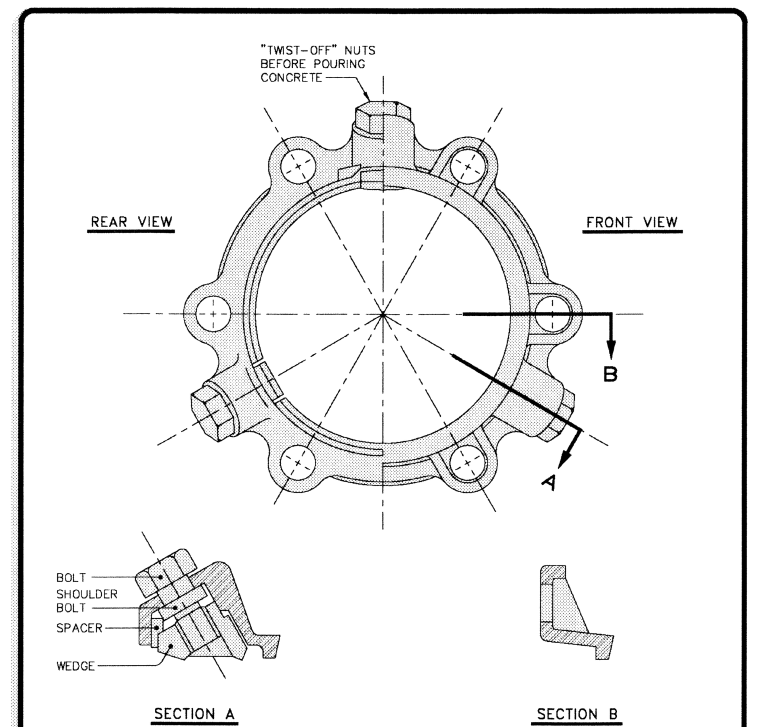

THE CITY OF LYNCHBURG
THRUST RING
SCALE: NOT TO SCALE | DETAIL # 26.04 | REVISION DATE: 12-14-2013 | SHEET # 2 OF 2
USE WITH THE CITY OF LYNCHBURG STANDARD SPECIFICATIONS ONLY

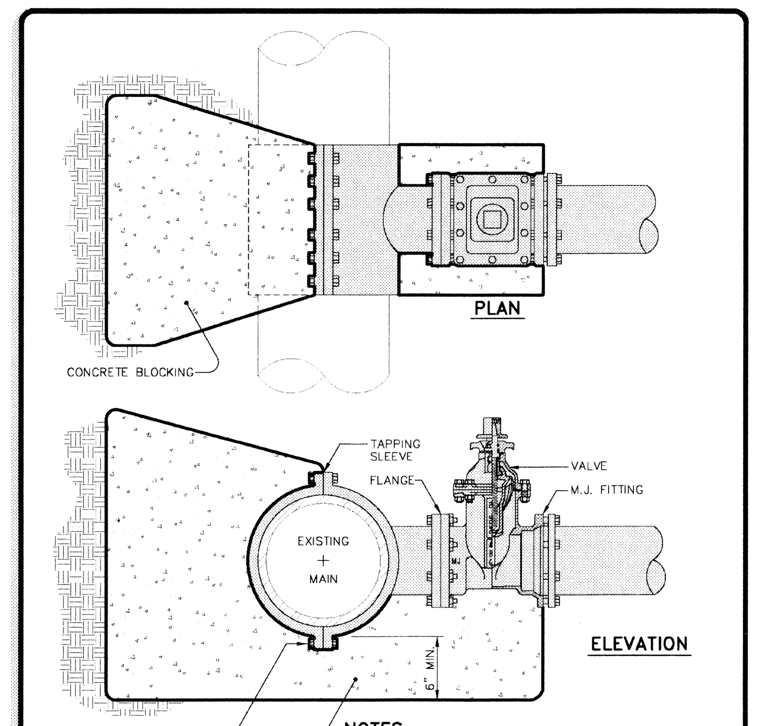

NOTES
1. CONCRETE SHALL NOT CONTACT BOLTS OR ENDS OF MECHANICAL JOINT FITTINGS. (WRAP IN PLASTIC)
2. SEE TYPE "F" (HORIZONTAL) ANCHOR BLOCK DETAIL 26.02 FOR AREA OF CONCRETE REQUIRED.
3. TAPPING SLEEVE SHALL BE A MINIMUM OF 4' FROM NEAREST PIPE JOINT.

THE CITY OF LYNCHBURG
TAPPING SLEEVE & VALVE DETAIL
SCALE: NOT TO SCALE | DETAIL # 26.06 | REVISION DATE: 12-14-2013 | SHEET # 1 OF 1
USE WITH THE CITY OF LYNCHBURG STANDARD SPECIFICATIONS ONLY

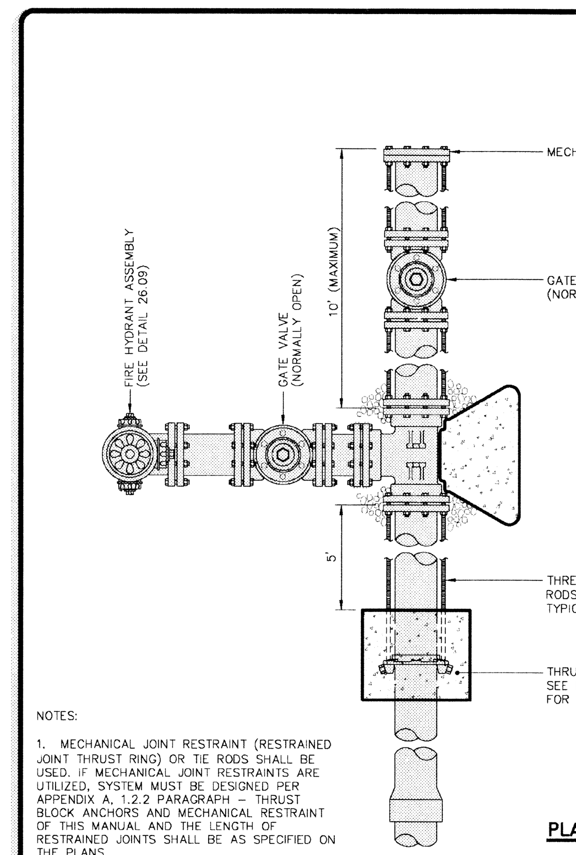

NOTES:

1. MECHANICAL JOINT RESTRAINT (RESTRAINED JOINT THRUST RING) OR TIE RODS SHALL BE USED. IF MECHANICAL JOINT RESTRAINTS ARE UTILIZED, SYSTEM MUST BE DESIGNED PER APPENDIX A, 1.2.2 PARAGRAPH – THRUST BLOCK ANCHORS AND MECHANICAL RESTRAINT OF THIS MANUAL AND THE LENGTH OF RESTRAINED JOINTS SHALL BE AS SPECIFIED ON THE PLANS.

THE CITY OF LYNCHBURG
END of LINE for FUTURE EXPANSION
SCALE: NOT TO SCALE | DETAIL # 26.08 | REVISION DATE: 12-14-2013 | SHEET # 1 OF 1
USE WITH THE CITY OF LYNCHBURG STANDARD SPECIFICATIONS ONLY

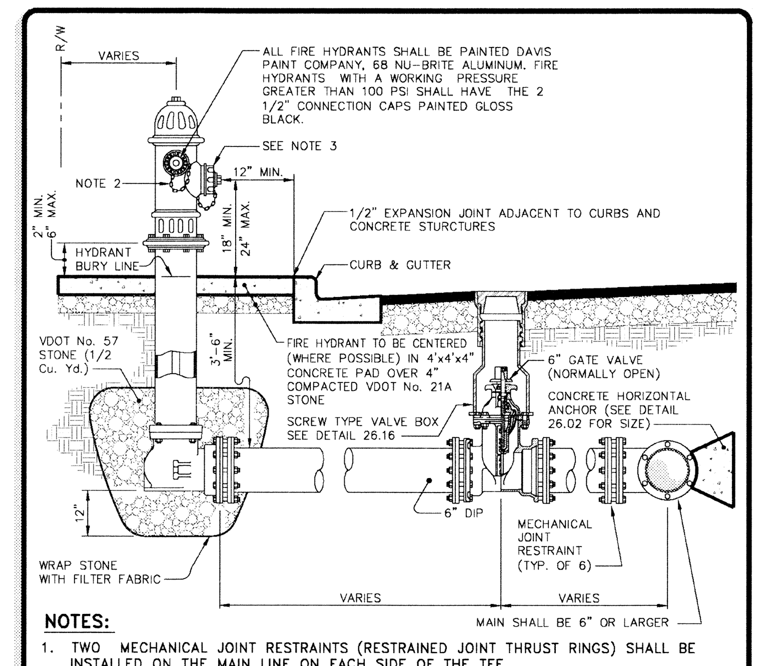

NOTES:
1. TWO MECHANICAL JOINT RESTRAINTS (RESTRAINED JOINT THRUST RINGS) SHALL BE INSTALLED ON THE MAIN LINE ON EACH SIDE OF THE TEE.
2. CHAINS ON FIRE HYDRANTS TO BE REMOVED.
3. HYDRANTS TO BE PLACED WITH PUMPER NOZZLE FACING THE STREET OR AS OTHERWISE DIRECTED.
4. WHEN VALVE BOX IS PLACED OUTSIDE OF PAVEMENT, PROVIDE PRECAST SHOULDER SLAB. (DETAIL 26.18)
5. WHEN FIRE HYDRANTS ARE INSTALLED WHERE ROADWAY HAS A DRAINAGE DITCH AND NO CURB & GUTTER, MINIMUM COVER SHALL BE 24" FROM THE BOTTOM OF DITCH.
6. WHERE HYDRANT IS SET BEHIND GUARDRAIL, CENTERLINE OF PUMPER NOZZLE TO BE A MINIMUM OF 12" AND A MAXIMUM OF 18" ABOVE TOP OF GUARDRAIL.
7. ALL JOINTS BETWEEN THE VALVE AND THE 90° BEND TO THE FIRE HYDRANT SHALL BE RESTRAINED
8. IN AREAS OF HIGH GROUNDWATER, THE WEEP HOLES SHALL BE PLUGGED AS DIRECTED BY THE ENGINEER.

THE CITY OF LYNCHBURG
TYPICAL FIRE HYDRANT CONNECTION DETAIL
SCALE: NOT TO SCALE | DETAIL # 26.09 | REVISION DATE: 12-14-2013 | SHEET # 1 OF 1
USE WITH THE CITY OF LYNCHBURG STANDARD SPECIFICATIONS ONLY

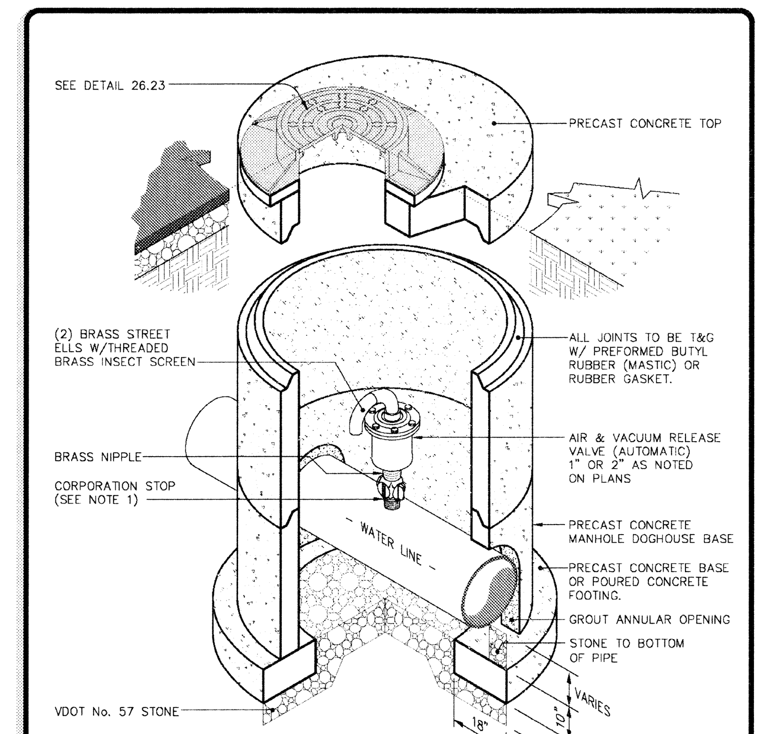

NOTES:
1. DO NOT EXCEED ALLOWABLE DIRECT TAP ALLOWED BY PIPE MANUFACTURER. OTHERWISE, USE DOUBLE STRAP SERVICE SADDLE FOR 2" AIR RELEASE.
2. CONE SECTION MAY BE SUBSTITUTED FOR FLAT TOP ACCORDING TO DEPTH.

THE CITY OF LYNCHBURG
AIR & VACUUM RELEASE VALVE in PRECAST MANHOLE
SCALE: NOT TO SCALE | DETAIL # 26.11 | REVISION DATE: 12-14-2013 | SHEET # 1 OF 1
USE WITH THE CITY OF LYNCHBURG STANDARD SPECIFICATIONS ONLY

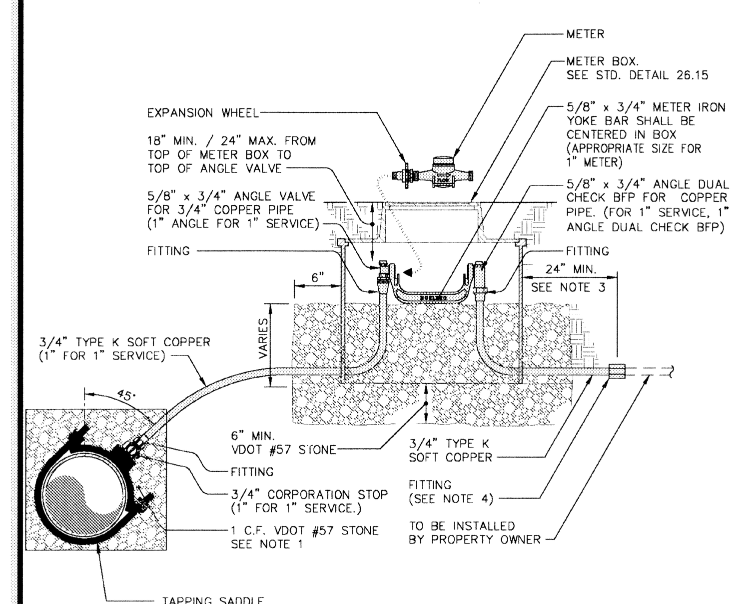

NOTES:
1. FULLY ENCOMPASS TAPPING SADDLE WITH STONE.
2. METER BOX TO BE LOCATED ON THE RIGHT-OF-WAY SIDE OF PROPERTY LINE.
3. WHEN METER BOX IS SET IN SIDEWALK, PIGTAIL TO EXTEND 2 FEET BEYOND EDGE OF SIDEWALK.
4. FITTING TO BE USED WHEN CONNECTING TO EXISTING SERVICE, OTHERWISE CRIMP END OF SERVICE LINE.
5. METER & EXPANSION WHEEL TO BE FURNISHED & INSTALLED BY CITY.
6. THERMAL EXPANSION MUST BE ADDRESSED.
7. THIS DETAIL IS FOR NEW CONSTRUCTION ONLY. SEE SPECIFICATIONS FOR SERVICE REPLACEMENT PROJECTS.

THE CITY OF LYNCHBURG
3/4 INCH WATER SERVICE (1 INCH WATER SERVICE SIMILAR) (NEW CONSTRUCTION ONLY)
SCALE: NOT TO SCALE | DETAIL # 26.12B | REVISION DATE: 12-14-2013 | SHEET # 1 OF 1
USE WITH THE CITY OF LYNCHBURG STANDARD SPECIFICATIONS ONLY

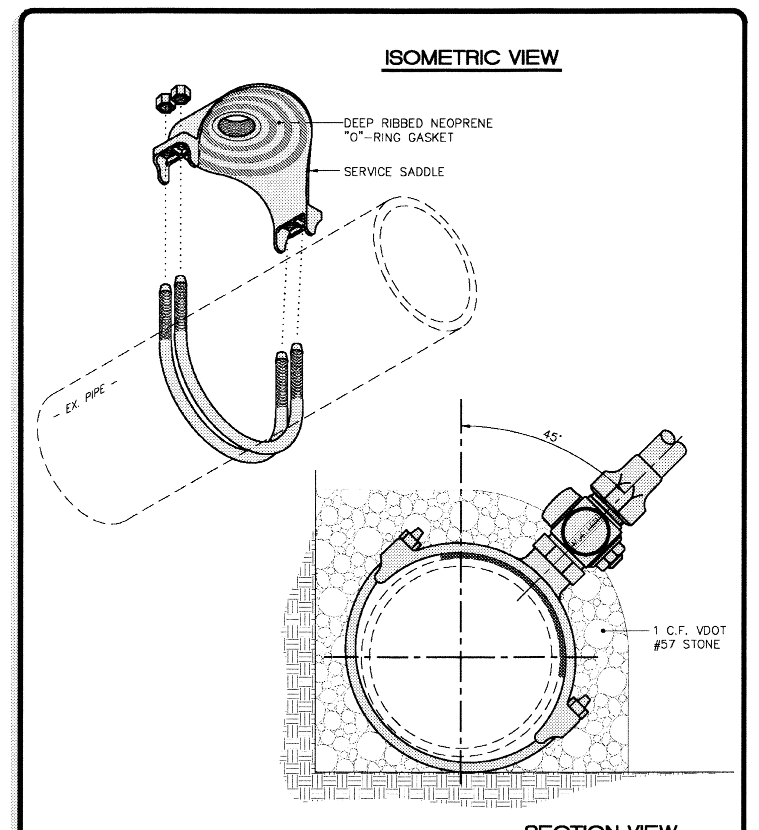

THE CITY OF LYNCHBURG
TYP. DOUBLE STRAP SERVICE SADDLE FOR 6" THRU 12" MAINS
SCALE: NOT TO SCALE | DETAIL # 26.14 | REVISION DATE: 12-14-2013 | SHEET # 1 OF 1
USE WITH THE CITY OF LYNCHBURG STANDARD SPECIFICATIONS ONLY

MAINGUARD NO. 78 BLOW-OFF HYDRANT

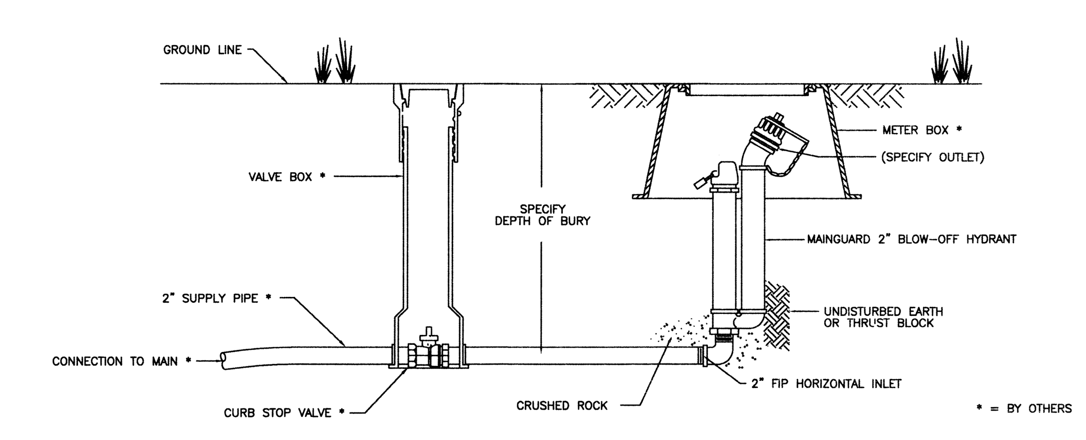

Blow-Off Hydrants shall be non-freezing, self draining type, with a depth of bury of '. Set underground in a customer proved meter box, these hydrants will be furnished with a 2" FIP inlet, a non-turning operating rod, and shall open to the left. All of the working parts shall be of bronze-to-bronze design, and be servicable from above grade with no digging. The outlet shall also be bronze and be 2-1/2" NST. Hydrants shall be lockable to prevent unauthorized use as manufactured by Kupferle Foundry Co., St. Louis, MO, or approved equal.

(Specify depth of bury and the oveall length will be 6" shorter. Minimum opening in meter box should be 10".)

NO	DATE	REVISION

THIS DRAWING IS THE PROPERTY OF THE KUPFERLE FOUNDRY COMPANY. IT IS NOT TO BE USED OR DUPLICATED WITHOUT PERMISSION OF THE OWNER.

DRAWN G.B. | APPROVED | DATE 8-18-09 | MAT'L

ECLIPSE Since 1857
KUPFERLE FOUNDRY COMPANY
2511 NORTH 9TH STREET, ST. LOUIS, MO 63102
314-281-8738 800-231-3990 FAX 314-213-2820
http://www.hydrants.com
PART NO. | SCALE TO FIT

NO.	REVISION	BY	DATE
3	REVISED TO ADDRESS CITY COMMENTS RECEIVED 4-8-14	JLW	5-6-14
2	ADDED SANITARY AND STORM SEWER DESIGN	GLM	3-12-14
1	REVISED TO ADDRESS CITY COMMENTS DATED MARCH 18, 2013	GLM	3-19-13

COMMONWEALTH OF VIRGINIA
JAMEY L. WHITE
Lic. No. 47808
5-6-14
PROFESSIONAL ENGINEER

WARNER WHITE ENGINEERING PARTNERS
118 CORNERSTONE STREET
LYNCHBURG, VIRGINIA 24502
PHONE: 434-534-3201 FAX: 434-534-3202

DRAWN BY: GLM
DESIGNED BY: JLW
REVIEWED BY: TJW
PROJECT No. 12030.00
SCALE: GRAPHIC

PROJECT: CITY PROJECTS: #12024-W
PRINCETON CIRCLE WATER LINE, SANITARY SEWER & STORM SEWER REPLACEMENT PLAN
LYNCHBURG, VIRGINIA

TITLE: **WATERLINE DETAILS**

DATE: REV. 5-6-14 2-28-13
DRAWING No: D1
SHEET NUMBER: 14 OF 15

FILE: P:\2012\12030.00 Princeton Circle Water Mains\Utility Plan\12030D1.dwg

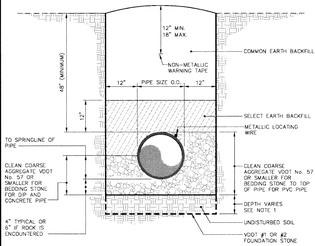

NOTES:

1. FOUNDATION STONE SHALL BE REQUIRED WHEN SOIL CONDITIONS ARE UNSUITABLE.
2. EXTRA DEPTH EXCAVATION SHALL BE PAID FOR AS ANYTHING BEYOND 4" OF COVER TO TOP OF PIPE.
3. AN ADDITIONAL 1 INCH DEPTH OF BEDDING MATERIAL WILL BE REQUIRED FOR EACH ADDITIONAL 2 FEET OF TRENCH DEPTH IN EXCESS OF 16 FEET UP TO A MAXIMUM OF 12 INCHES.

THE CITY OF LYNCHBURG

SANITARY SEWER LINE TRENCH DETAIL	NOT TO SCALE	DETAIL # 27.01
	REVISION DATE 12-14-2013	SHEET # 1 OF 1

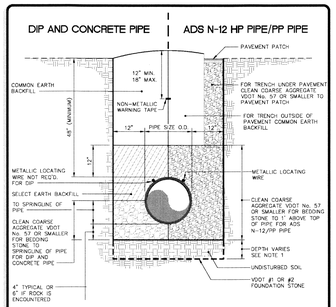

NOTES:

1. FOUNDATION STONE SHALL BE REQUIRED WHEN SOIL CONDITIONS ARE UNSUITABLE.
2. EXTRA DEPTH EXCAVATION SHALL BE PAID FOR AS ANYTHING BEYOND 4" OR COVER TO TOP OF PIPE.
3. AN ADDITIONAL 1 INCH DEPTH OF BEDDING MATERIAL WILL BE REQUIRED FOR EACH ADDITIONAL 2 FEET OF TRENCH DEPTH IN EXCESS OF 16 FEET UP TO A MAXIMUM OF 12 INCHES.
4. NON-METALLIC WARNING TAPE AND METALLIC LOCATING WIRE NOT REQUIRED FOR CULVERTS UNDER ROAD.

THE CITY OF LYNCHBURG

STORM SEWER LINE TRENCH DETAIL	NOT TO SCALE	DETAIL # 27.01A
	REVISION DATE 12-14-2013	SHEET # 1 OF 1

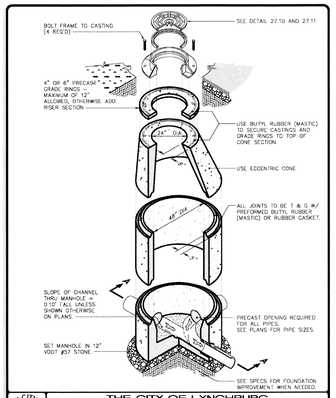

THE CITY OF LYNCHBURG

PRECAST CONCRETE 4' DIAMETER MANHOLE	NOT TO SCALE	DETAIL # 27.02
	REVISION DATE 12-14-2013	SHEET # 1 OF 2

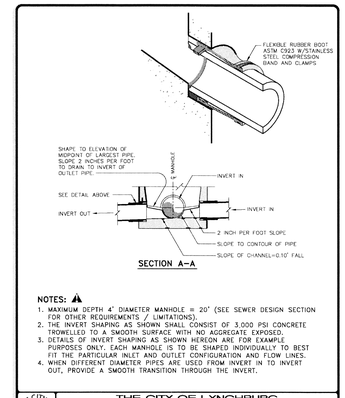

SECTION A–A

NOTES:

1. MAXIMUM DEPTH 4' DIAMETER MANHOLE = 20' (SEE SEWER DESIGN SECTION FOR OTHER REQUIREMENTS / LIMITATIONS).
2. THE INVERT SHAPING AS SHOWN SHALL CONSIST OF 3,000 PSI CONCRETE TROWELLED TO A SMOOTH SURFACE WITH NO AGGREGATE EXPOSED.
3. DETAILS OF INVERT SHAPING AS SHOWN HEREON ARE FOR EXAMPLE PURPOSES ONLY. EACH MANHOLE IS TO BE SHAPED INDIVIDUALLY TO BEST FIT THE PARTICULAR INLET AND OUTLET CONFIGURATION AND FLOW LINES.
4. WHEN DIFFERENT DIAMETER PIPES ARE USED FROM INVERT IN TO INVERT OUT, PROVIDE A SMOOTH TRANSITION THROUGH THE INVERT.

THE CITY OF LYNCHBURG

PRECAST CONCRETE 4' DIAMETER MANHOLE	NOT TO SCALE	DETAIL # 27.02
	REVISION DATE 12-14-2013	SHEET # 2 OF 2

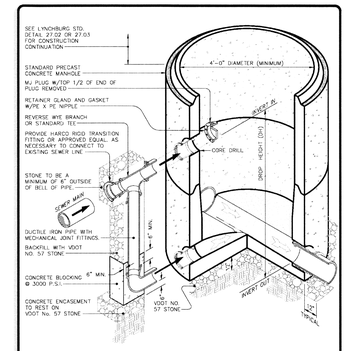

* FOR NEW AND EXISTING MANHOLES

THE CITY OF LYNCHBURG

STANDARD EXTERIOR DROP MANHOLE	NOT TO SCALE	DETAIL # 27.05
	REVISION DATE 12-14-2013	SHEET # 1 OF 1

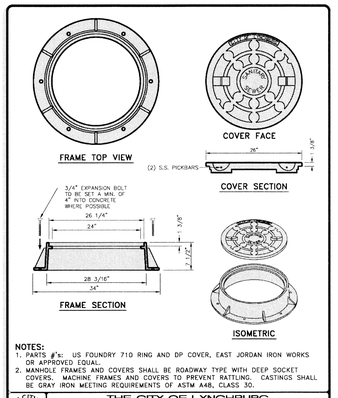

NOTES:

1. PAINTS #'s: US FOUNDRY 710 RING AND DP COVER, EAST JORDAN IRON WORKS OR APPROVED EQUAL.
2. MANHOLE FRAMES AND COVERS SHALL BE ROADWAY TYPE WITH DEEP SOCKET COVERS. MACHINE FRAMES AND COVERS TO PREVENT RATTLING. CASTINGS SHALL BE GRAY IRON MEETING REQUIREMENTS OF ASTM A48, CLASS 30.

THE CITY OF LYNCHBURG

STANDARD MANHOLE FRAME and COVER	NOT TO SCALE	DETAIL # 27.10
	REVISION DATE 12-14-2013	SHEET # 1 OF 1

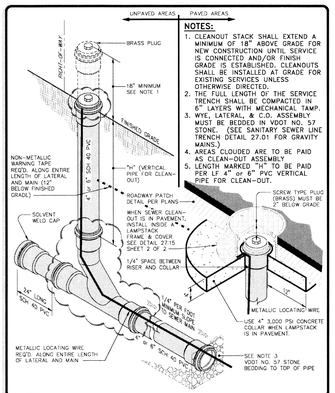

NOTES:

1. CLEANOUT STACK SHALL EXTEND A MINIMUM OF 18" ABOVE GRADE FOR NEW CONSTRUCTION UNTIL SERVICE IS CONNECTED AND/OR FINISH GRADE IS ESTABLISHED. CLEANOUTS SHALL BE INSTALLED AT GRADE FOR EXISTING SERVICES UNLESS OTHERWISE DIRECTED.
2. THE FULL LENGTH OF THE SERVICE TRENCH SHALL BE COMPACTED IN 6" LAYERS WITH MECHANICAL TAMP.
3. WYE, LATERAL, & C.O. ASSEMBLY MUST BE BEDDED IN VDOT NO. 57 STONE. (SEE SANITARY SEWER LINE TRENCH DETAIL 27.01 FOR GRAVITY MAINS.)
4. AREAS CLOUDED ARE TO BE PAID AS CLEAN-OUT ASSEMBLY
5. LENGTH MARKED "H" TO BE PAID PER LF 4" or 6" PVC VERTICAL PIPE FOR CLEAN-OUT.

THE CITY OF LYNCHBURG

TYPICAL PVC SEWER LATERAL CLEANOUT WITH IN-LINE WYE	NOT TO SCALE	DETAIL # 27.15
	REVISION DATE 12-14-2013	SHEET # 1 OF 2

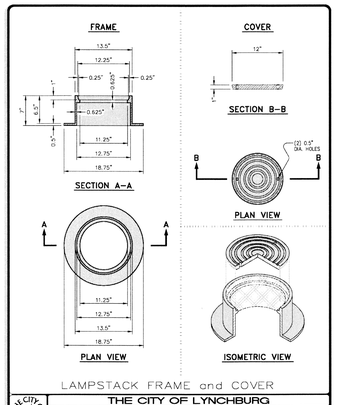

LAMPSTACK FRAME and COVER

THE CITY OF LYNCHBURG

TYPICAL PVC SEWER LATERAL CLEANOUT WITH IN-LINE WYE	NOT TO SCALE	DETAIL # 27.15
	REVISION DATE 12-14-2013	SHEET # 2 OF 2

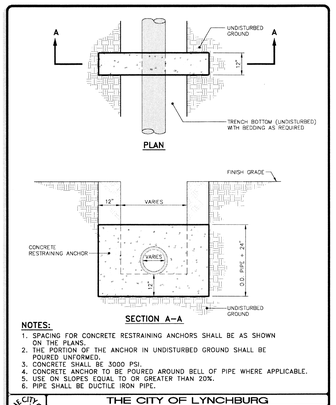

NOTES:

1. SPACING FOR CONCRETE RESTRAINING ANCHORS SHALL BE AS SHOWN ON THE PLANS.
2. THE PORTION OF THE ANCHOR IN UNDISTURBED GROUND SHALL BE POURED UNFORMED.
3. CONCRETE SHALL BE 3000 PSI.
4. CONCRETE ANCHOR TO BE POURED AROUND BELL OF PIPE WHERE APPLICABLE.
5. USE ON SLOPES EQUAL TO OR GREATER THAN 20%.
6. PIPE SHALL BE DUCTILE IRON PIPE.

THE CITY OF LYNCHBURG

CONCRETE RESTRAINING ANCHOR	NOT TO SCALE	DETAIL # 27.21
	REVISION DATE 12-14-2013	SHEET # 1 OF 1

NO.	REVISION	BY	DATE
2	REVISED TO ADDRESS CITY COMMENTS RECEIVED 4-8-14	JLW	5-6-14
1	ADDED SANITARY AND STORM SEWER DESIGN	GLM	3-12-14

COMMONWEALTH OF VIRGINIA
JAMES L. WHITE
Lic. No. 47808
5-6-14
PROFESSIONAL ENGINEER

WARNER WHITE
ENGINEERING PARTNERS
118 CORNERSTONE STREET
LYNCHBURG, VIRGINIA 24502
PHONE: 434-534-3201 FAX: 434-534-3202

DRAWN BY: GLM
DESIGNED BY: JLW
REVIEWED BY: TJW
PROJECT No. 12030.00
SCALE: GRAPHIC

PROJECT: CITY PROJECTS: #12024-W
PRINCETON CIRCLE WATER LINE, SANITARY SEWER & STORM SEWER REPLACEMENT PLAN
LYNCHBURG, VIRGINIA

TITLE: SANITARY SEWER & STORM DETAILS

DATE: REV. 5-6-14 2-28-13
DRAWING No: D2
SHEET NUMBER: 15 OF 15

FILE: P:\2012\12030.00 Princeton Circle Water Mains\Utility Plan\12030D2.dwg