City of Lynchburg
Procurement Division
900 Church Street
Lynchburg, Virginia 24504
Telephone No.: (434) 455-3970
Fax No.: (434) 845-0711

Addendum for Invitation for Bids
CHILLER REPLACEMENT AT PAUL MUNRO ELEMENTARY SCHOOL
2016-078

Date: 05/12/2016
From: Lisa Moss, Buyer VCA
RE: Addendum No. 2

This Addendum supplements and amends the original Plans and Specifications and shall be taken into account in preparing proposals and shall become a part of the Contract Documents. The Bidder shall indicate receipt of this Addendum and all previously issued Addenda on the Bid Form.

1. On this bid, is the refrigerant in the old chiller the responsibility of the winning bidder, or are you retaining the refrigerant? Reason being, we would like to buy the used refrigerant.
Answer: LCS desires for the refrigerant to be removed, filtered, and turned over to LCS. LCS will provide containers if needed.

2. Can you tell me the tonnage of the old chiller and the refrigerant it uses?
Answer: The existing chiller is nominal 120 ton compressor-chiller that utilizes R-22. The condensers are also rated for 120 tons total (2 – 60 ton condensers).

3 . Drawing M4 ,note #6 ,Pipe is to be supported for the concrete slab. Not roof structure. Will a pipe stand detail be engineered by Masters and sent out in a Addendum?
Answer: The pipe supports are specified in Section 230529 and are the responsibility of the contractor.

4. Does the holes for the old pipe, in the wall between the chiller evaporator barrel and outdoor condenser get infilled with block or can it be poured back with Quickcrete?
Answer: The existing holes should be repaired to match existing (CMU).

5. Can the utility building between chiller building and parking lot be moved by the school, for easy access to the chain link fence at condenser?
Answer: LCS will move the utility building as required by the contractor.

6. Pre-insulated pipe manufacturer is saying 3 weeks for delivery on "Stick and Kit " pipe after approved submittals , that does not leave but a couple weeks to get in the ground and system running by July . Can Final completion move to August? Will Masters provide an alternate for this?
Answer: At least one pre-insulated piping vendor has been contacted. The submittals for the specified product may be generated ahead of the contract being issued. An alternate system should not be needed.

7. Does school want any of the existing equipment?
Answer: LCS desires that the chilled water pump be saved and turned over to them.

8. Can Aqua therm pipe be used as a substitute for the pre-insulated pipe?
Answer: No.

9. Is there any asbestos?
Answer: The existing pipe insulation is closed cell foam (Rubatex-type) that appears to be approximately 10-15 years old. An asbestos inspection has not been performed by the

Owner, however, no asbestos containing materials are believed to be within the proposed work area. If any materials are encountered by the contractor which are suspected of containing asbestos, the contractor shall notify the Owner's representative immediately before disturbing the material.

10. Is there any black wall?
Answer: No black wall pipe is believed to be within the proposed work area. If any black wall pipe is encountered by the contractor, the contractor shall notify the Owner's representative immediately before disturbing the material.

11. Is there a place to put onsite for soils?
Answer: LCS does have a space on the grounds of the school for clean soils. Concrete, asphalt and other contaminated soils will need to be hauled away to an appropriate fill site.

12. Existing feeder? Demolish of flush?
Answer: Reconnect the existing feeder to the new chilled water supply and return lines within the mechanical room.

13. Contractor is responsible for providing port a johns. City will not provide restroom access during construction.

14. Will the existing breaker for the chiller be demo'd out of the panel or marked as a spare?
Answer: Mark as spare.

15. Can LB condulets be used through the existing building for power to the new panel or should we come through the slab inside the building?
Answer: LB condulets can be used as long as the weather integrity of the wall is maintained.

16. Where will the baseboard heater be relocated to?
Answer: The baseboard heater should be reinstalled on the same wall to avoid the new piping penetrations.

17. What is the AIC rating for the MCCB for the chiller?
Answer: 65,000 amperes

18. Can the panels be series rated?
Answer: No

19. Can the Main breaker for Panel CHH be electronic trip rather than thermal mag?
Answer: Yes

20. Can you put the cut sheet of the owner supplied chiller in a Addendum? Need to know weight.

21. The Installation, Operation and Maintenance manuals are attached.

22. Is it acceptable to cut, cap and abandon the existing Underground pipe and run the new piping parallel to it?
Note: the existing naturally be removed where interferes with installation of new (at the buildings).
Answer: Yes, the existing piping may be abandoned in place where the routing of the new piping is not affected. Trench clearances indicted in the detail must be maintained. It is expected that the existing piping route is approximately where the new pipe will be routed, so the majority of the existing may need to be demolished in its entirety based on the existing routing.

23. Can the 4” PVC Electrical Conduit be run in the same ditch as the Underground pipe?
Answer: Yes, the electrical conduit may be routed in the same ditch as the underground piping. If a common trench is utilized, the conduit must be routed at the same level as the piping with 6” of lateral separation to the nearest pipe.

24. Can the chilled water supply line be run outside of the remote mechanical room (see attached sheet)?
Answer: Yes, the chilled water supply pipe may be transitioned directly underground at the chiller instead of being routed through the remote room.

25. Is it acceptable to use a base mounted or vertical in-line pump in lieu of horizontal split case pump?
Answer: The horizontal split case pump is desired.

26. The submittal sheet for the equipment is attached.

Company Name:_____Address:_____Date:_____

Authorized Signature:_____Title:_____

Print Name:_____Telephone No.:_____Fax No.:_____

Installation, Operation, and Maintenance

Stealth™ Air-Cooled Chiller
Model RTAE

150 to 300 Nominal Tons

⚠SAFETY WARNING

Only qualified personnel should install and service the equipment. The installation, starting up, and servicing of heating, ventilating, and air-conditioning equipment can be hazardous and requires specific knowledge and training. Improperly installed, adjusted or altered equipment by an unqualified person could result in death or serious injury. When working on the equipment, observe all precautions in the literature and on the tags, stickers, and labels that are attached to the equipment.

October 2014

RTAE-SVX001B-EN

Ingersoll Rand

Warnings, Cautions and Notices

Warnings, Cautions and Notices. Note that warnings, cautions and notices appear at appropriate intervals throughout this manual. Warnings are provided to alert installing contractors to potential hazards that could result in death or personal injury. Cautions are designed to alert personnel to hazardous situations that could result in personal injury, while notices indicate a situation that could result in equipment or property-damage-only accidents.

Your personal safety and the proper operation of this machine depend upon the strict observance of these precautions.

Read this manual thoroughly before operating or servicing this unit.

ATTENTION: Warnings, Cautions and Notices appear at appropriate sections throughout this literature. Read these carefully:

⚠WARNING Indicates a potentially hazardous situation which, if not avoided, could result in death or serious injury.

⚠CAUTION Indicates a potentially hazardous situation which, if not avoided, could result in minor or moderate injury. It could also be used to alert against unsafe practices.

NOTICE: Indicates a situation that could result in equipment or property-damage only

Important Environmental Concerns!

Scientific research has shown that certain man-made chemicals can affect the earth's naturally occurring stratospheric ozone layer when released to the atmosphere. In particular, several of the identified chemicals that may affect the ozone layer are refrigerants that contain Chlorine, Fluorine and Carbon (CFCs) and those containing Hydrogen, Chlorine, Fluorine and Carbon (HCFCs). Not all refrigerants containing these compounds have the same potential impact to the environment. Trane advocates the responsible handling of all refrigerants-including industry replacements for CFCs such as HCFCs and HFCs.

Responsible Refrigerant Practices!

Trane believes that responsible refrigerant practices are important to the environment, our customers, and the air conditioning industry. All technicians who handle refrigerants must be certified. The Federal Clean Air Act (Section 608) sets forth the requirements for handling, reclaiming, recovering and recycling of certain refrigerants and the equipment that is used in these service procedures. In addition, some states or municipalities may have additional requirements that must also be adhered to for responsible management of refrigerants. Know the applicable laws and follow them.

⚠WARNING

Refrigerant under High Pressure!

System contains oil and refrigerant under high pressure. Recover refrigerant to relieve pressure before opening the system. See unit nameplate for refrigerant type. Do not use non-approved refrigerants, refrigerant substitutes, or refrigerant additives. Failure to recover refrigerant to relieve pressure or the use of non-approved refrigerants, refrigerant substitutes, or refrigerant additives could result in an explosion which could result in death or serious injury or equipment damage.

⚠WARNING

Personal Protective Equipment (PPE) Required!

Installing/servicing this unit could result in exposure to electrical, mechanical and chemical hazards.

- **Before installing/servicing this unit, technicians MUST put on all PPE required for the work being undertaken (Examples; cut resistant gloves/sleeves, butyl gloves, safety glasses, hard hat/bump cap, fall protection, electrical PPE and arc flash clothing). ALWAYS refer to appropriate Material Safety Data Sheets (MSDS)/Safety Data Sheets (SDS) and OSHA guidelines for proper PPE.**
- **When working with or around hazardous chemicals, ALWAYS refer to the appropriate MSDS/SDS and OSHA/GHS (Global Harmonized System of Classification and Labelling of Chemicals) guidelines for information on allowable personal exposure levels, proper respiratory protection and handling instructions.**
- **If there is a risk of energized electrical contact, arc, or flash, technicians MUST put on all PPE in accordance with OSHA, NFPA 70E, or other country-specific requirements for arc flash protection, PRIOR to servicing the unit. NEVER PERFORM ANY SWITCHING, DISCONNECTING, OR VOLTAGE TESTING WITHOUT PROPER ELECTRICAL PPE AND ARC FLASH CLOTHING. ENSURE ELECTRICAL METERS AND EQUIPMENT ARE PROPERLY RATED FOR INTENDED VOLTAGE.**

Failure to follow instructions could result in death or serious injury.

© 2014 Trane All rights reserved

⚠ WARNING

Proper Field Wiring and Grounding Required!

All field wiring MUST be performed by qualified personnel. Improperly installed and grounded field wiring poses FIRE and ELECTROCUTION hazards. To avoid these hazards, you MUST follow requirements for field wiring installation and grounding as described in NEC and your local/state electrical codes. Failure to follow code could result in death or serious injury.

Factory Warranty Information

Compliance with the following is required to preserve the factory warranty:

All Unit Installations

Startup MUST be performed by Trane, or an authorized agent of Trane, to VALIDATE this WARRANTY. Contractor must provide a two-week startup notification to Trane (or an agent of Trane specifically authorized to perform startup).

Copyright

This document and the information in it are the property of Trane, and may not be used or reproduced in whole or in part without written permission. Trane reserves the right to revise this publication at any time, and to make changes to its content without obligation to notify any person of such revision or change.

Trademarks

All trademarks referenced in this document are the trademarks of their respective owners.

Revision History

RTAE-SVX001B-EN (29 Oct 2014)

- Added transformer option.
- Added harmonic filter option.
- Added 150T and 165T single circuit units.
- Added extreme low ambient option.
- Added seismic isolation option.
- Added CE/PED option.
- Updated unit weights and isolator information.
- Updated drive cooling fluid volumes.
- Modified oil sump check procedure.

RTAE-SVX001A-EN (24 Sep 2013)

New release.

Table of Contents

Warnings, Cautions and Notices 2
- Factory Warranty Information 3
- Copyright 3
- Trademarks 3
- Revision History 3

Model Number Description 6
- Outdoor Unit Nameplate 6
- Compressor Nameplate 6

Model Number Descriptions 7
- Unit Model Number 7
- Compressor Model Number 8
- Compressor Serial Number 8

General Information 9
- Unit Description 9
- Accessory/Option Information 9

General Data 10
- Drive Cooling System 11

Pre-Installation 12
- Unit Inspection 12
- Inspection 12
- Storage 12
- Installation Requirements 13

Dimensions and Weights 14
- Weights 14
- Unit Dimensions 14
- Service Clearances 14

Installation Mechanical 15
- Location Requirements 15
  - Sound Considerations 15
  - Foundation 15
  - Clearances 15
- Center of Gravity 20
- Isolation and Sound Emission 20
  - Unit Isolation and Leveling 20
- Compressor Shipping Bolt Removal 23
  - Units with InvisiSound™ Ultimate Option (Model Number Digit 12 = 3) 23
- Drainage 23
  - Evaporator Piping Components 25
- Pressure Relief Valves 26
- Evaporator Waterside Pressure Drop Curves 27
- Freeze Protection 29
- Low Evaporator Refrigerant Cutout, Glycol Requirements 30

Installation Electrical 31
- General Recommendations 31
  - Adaptive Frequency™ Drive (AFD_3) Capacitor Discharge 32
  - Units with Nitrogen Charge Option 32
- Installer-Supplied Components 32
  - Power Supply Wiring 33
  - Control Power Supply 34
  - Service Power Connection 34
  - Heater Power Supply 34
- Interconnecting Wiring 35
  - Chilled Water Pump Control 35
- Programmable Relays 35
- Relay Assignments Using Tracer™ TU . . .36
- Low Voltage Wiring 36
  - Emergency Stop 36
  - External Auto/Stop 36
  - External Circuit Lockout – Circuit #1 and #2 36
  - Ice Building Option 37
  - External Chilled Water Setpoint (ECWS) Option 37
  - External Demand Limit Setpoint (EDLS) Option 37
  - Chilled Water Reset (CWR) 38
- Transformer Power Rating 39
- Communications Interface 39
  - LonTalk Interface (LCI-C) 39
  - BACnet Interface (BCI-C) 39
  - Modbus Remote Terminal Unit Interface .39

Operating Principals 40
- Refrigeration Circuits 40
- Refrigeration Cycle 40
- Refrigerant R-134a 40

Compressor and Lube Oil System 40
Condenser and Fans 40
Evaporator 41
Drive Cooling System 41
Controls 42
UC800 Specifications 42
Wiring and Port Descriptions 42
Communication Interfaces 43
Rotary Switches 43
LED Description and Operation 43
Tracer AdaptiView TD7 Display 43
Operator Interface 43
Main Display Area/Home Screen 44
Viewing Chiller Operating Modes 44
Alarms 46
Reports 47
Equipment Settings 49
Display Settings 51
Viewing the Settings Screen 51
Cleaning the Display 52
Security Settings 52
Disabling/Enabling Security 52
InvisiSound Ultimate - Noise Reduction Mode 54
Tracer™ TU 55
Pre-Start 56
Start-Up and Shutdown 57
Unit Start-Up 57
Temporary Shutdown And Restart 57
Extended Shutdown Procedure 57
Seasonal Unit Start-Up Procedure 58
System Restart After Extended Shutdown 58
Sequence of Operation 59
Software Operation Overview 59
Timelines 59
Power Up Diagram 60
Power Up to Starting 61
Stopped to Starting 62
Running (Lead Compressor/Circuit Start and Run) 63
Running (Lag Compressor/Circuit Start and Run) 63
Satisfied Setpoint 64
Normal Shutdown to Stopped or Run Inhibit 65
Immediate Shutdown to Stopped or Run Inhibit 65
Ice Making (Running to Ice Making to Running) 66
Ice Making (Auto to Ice Making to Ice Making Complete) 67
Maintenance 68
Recommended Maintenance 69
Weekly 69
Monthly 69
Annual 69
Refrigerant and Oil Charge Management .69
Lubrication System 69
Oil Sump Level Check 69
Drive Cooling System 71
Service Intervals 71
Unit Diagnostics 71
pH Test 71
Pressure Relief Cap 71
Drive Cooling Expansion Tank 71
Condenser Coils — Cleaning and Inspection 72
Coil Cleaning and Inspection Interval 72
Cleaning Air Side of RTAE Coils 72
Cleaning Coated Coils 72
Coil Corrosion Protection Inspection 72
Reinstallation of Compressor Shipping Bolts 72
Servicing Chiller Roof 72
Diagnostics 73
AFD Diagnostics 73
Main Processor Diagnostics 76
Communication Diagnostics 85
Operator Display Diagnostics and Messages 88
Unit Wiring 89
Log and Check Sheet 90

Model Number Description

Nameplates

The Stealth™ outdoor unit nameplates are applied to the exterior of the Control Panel. A compressor nameplate is located on each compressor. When the unit arrives, compare all nameplate data with ordering, submittal, and shipping information.

Outdoor Unit Nameplate

See Figure 1 for a typical unit nameplate. The outdoor unit nameplate provides the following information:

- Unit model and size description.
- Unit serial number.
- Identifies unit electrical requirements.
- Lists correct operating charges of R-134a and refrigerant oil (Trane OIL00311).
- Lists unit test pressures.
- Identifies installation, operation and maintenance and service data literature.
- Lists drawing numbers for unit wiring diagrams.

Model Number Coding System

The model numbers for the unit and the compressor are composed of numbers and letters that represent features of the equipment. Shown in the following table is a sample of typical unit model number and the coding system for each.

Each position, or group of positions, in the model number is used to represent a feature. For example, in the first table, position 08 of the unit model number, Unit Voltage, contains the number "4". A 4 in this position means that the unit voltage is 460/60/3.

Unit Model Number. An example of a typical unit model number (M/N) is:

RTAE 200F UA01 AA1F N1X1 A1A0 0CB0 X02X AA03 000

Model number digits are selected and assigned in accordance with the definitions as listed in "Unit Model Number," p. 7.

Compressor Nameplate

The compressor nameplate provides the following information:

- Compressor model number. See "Compressor Model Number," p. 8.
- Compressor serial number. See "Compressor Serial Number," p. 8.
- Compressor electrical characteristics.
- Utilization range.
- Recommended refrigerant.

Figure 1. Typical unit nameplate

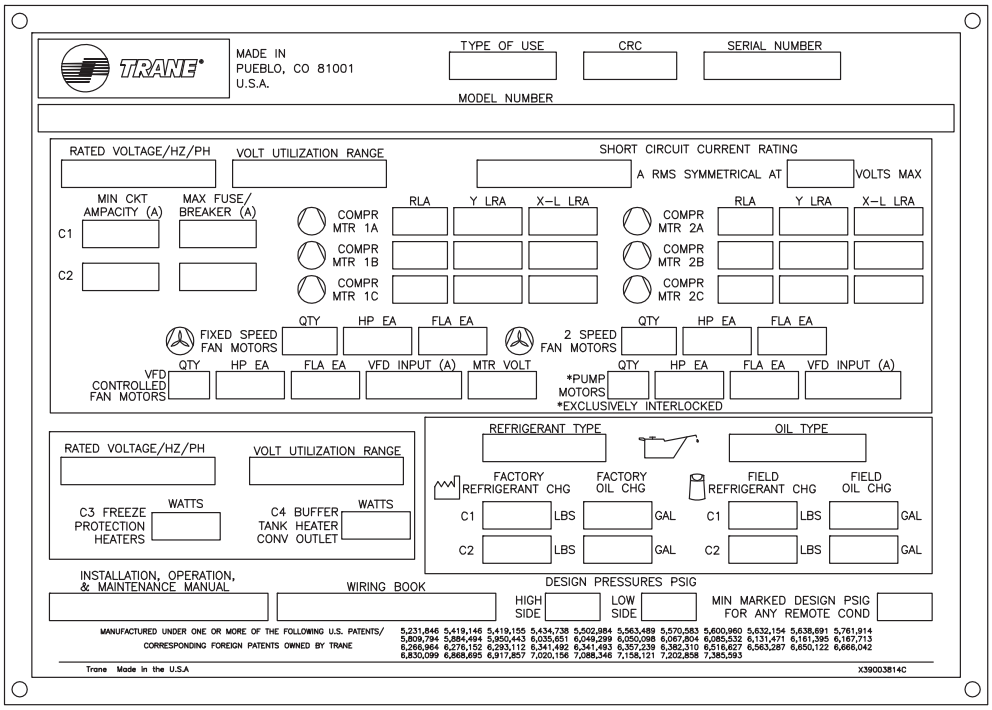

Model Number Descriptions

Unit Model Number

Digits 1,2 — Unit Model

RT = Rotary Chiller

Digits 3— Unit Type

A = Air-cooled

Digits 4 — Development Sequence

E = Development Sequence

Digits 5-7 — Nominal Capacity

149 = 150 Nominal Tons Single Circuit
164 = 165 Nominal Tons Single Circuit
150 = 150 Nominal Tons
165 = 165 Nominal Tons
180 = 180 Nominal Tons
200 = 200 Nominal Tons
225 = 225 Nominal Tons
250 = 250 Nominal Tons
275 = 275 Nominal Tons
300 = 300 Nominal Tons

Digit 8— Unit Voltage

A = 200/60/3
B = 230/60/3
C = 380/50/3
D = 380/60/3
E = 400/50/3
F = 460/60/3
G = 575/60/3
H = 400/60/3

Digit 9 — Manufacturing Location

U = Trane Commercial Systems, Pueblo, CO USA

Digits 10, 11— Design Sequence

** = Factory assigned

Digit 12 — Unit Sound Package

1 = InvisiSound™ Standard Unit
2 = InvisiSound Superior (Line Wraps, Reduced Fan Speed)
3 = InvisiSound Ultimate (Compressor Sound Attenuation, Line Wraps, Reduced Fan Speed)

Digit 13 — Agency Listing

0 = No Agency Listing
A = UL/CUL Listing
C = CE European Safety Standard

Digit 14 — Pressure Vessel Code

A = ASME Pressure Vessel Code
D = Australia Pressure Vessel Code
C = CRN or Canada Equivalent Pressure Vessel Code
L = Chinese Pressure Vessel Code
P = PED European Pressure Vessel Code

Digit 15 — Factory Charge

1 = Refrigerant Charge HFC-134a
2 = Nitrogen Charge

Digit 16 — Evaporator Application

F = Standard Cooling (40 to 68°F/5.5 to 20°C)
G = Low Temp Process (<40°F Leaving Temp)
C = Ice-making (20 to 68°F/-7 to 20°C) w/ Hardwired Interface

Digit 17 — Evaporator Configuration

N = 2 Pass Evaporator
P = 3 Pass Evaporator

Digit 18 — Evaporator Fluid Type

1 = Water
2 = Calcium Chloride
3 = Ethylene Glycol
4 = Propylene Glycol
5 = Methanol

Digit 19 — Water Connection

X = Grooved Pipe
F = Grooved Pipe + Flange

Digit 20 — Flow Switch

1 = Factory Installed - Other Fluid (15 cm/s)
2 = Factory Installed - Water 2 (35 cm/s)
3 = Factory Installed - Water 3 (45 cm/s)

Digit 21 — Insulation

A = Factory Insulation - All Cold Parts 0.75″
B = Evaporator-Only Insulation - High Humidity/Low Evap Temp 1.25″

Digit 22 — Unit Application

1 = Standard Ambient (32 to 105°F/0 to 40.6°C)
2 = Low Ambient (0 to 105°F/-17.7 to 40.6°C)
3 = Extreme Low Ambient (-20 to 105°F/-28.9 to 40.6°C)
4 = High Ambient (32 to 125°F/0 to 52°C)
5 = Wide Ambient (0 to 125°F/-17.7 to 52°C)

Digit 23 — Condenser Fin Options

A = Aluminum Fins with Slits
D = CompleteCoat™ Epoxy Coated Fins

Digits 24, 25 — Not Used

Digit 26 — Power Line Connection Type

A = Terminal Block
C = Circuit Breaker
D = Circuit Breaker w/ High Fault Rated Control Panel

Digit 27 — Short Circuit Current Rating

A = Default A Short Circuit Rating
B = High A Short Circuit Rating

Digit 28 — Transformer

0 = No Transformer
1 = Factory Installed Transformer

Digit 29 — Line Voltage Harmonic Mitigation

X = Line Reactors (~30% TDD)
1 = Filter circuit (IEEE519 Compliant)

Digit 30 — Electrical Accessories

0 = No Convenience Outlet
C = 15A 115V convenience Outlet (Type B)

Digit 31 — Remote Communication Options

0 = No Remote Digital Communication
1 = LonTalk® Interface LCI-C (Tracer™ Compatible)
2 = BACnet® MS/TP Interface (Tracer compatible)
3 = ModBus™ Interface

Digit 32 — Hard Wire Communication

X = None
A = Hard Wired Bundle - All
B = Remote Leaving Water Temp Setpoint
C = Remote Leaving temp and Demand Limit Setpoints
D = Programmable Relay
E = Programmable Relay and Leaving Water and Demand Limit Setpoint
F = Percent Capacity
G = Percent Capacity and Leaving Water and Demand Limit Setpoint
H = Percent Capacity and Programmable Relay

Digit 33 — Not Used

Digit 34 — Structural Options

A = Standard Unit Structure
B = Seismic to International Building Code (IBC)
C = California Office of Statewide Health Planning and Development (OSHPD) Certification
D = Wind Load for Florida Hurricane 175 MPH
E = Seismic (IBC) and Wind Load
F = OSHPD and Wind Load

Digit 35 — Appearance Options

0 = No Appearance Options
A = Architectural Louvered Panels

Digit 36 — Unit Isolation

0 = No Isolation
1 = Elastomeric Isolators
3 = Seismic Rated Isopads

Digit 37 — Not Used

0 = Not Used

Digit 38 — Not Used

0 = Not Used

Digit 39 — Special

0 = None
S = Special

Compressor Model Number

Digits 1-4 — Compressor Type

CHHS= Positive displacement, helical rotary (twin screw) hermetic compressor

Digit 5 — Frame Size

R = R Frame: 70 - 100 tons
S = S Frame: 112 - 165 tons

Digit 6— Motor Length

B = 145 mm
C = 170 mm
E = 165 mm
F = 190 mm

Digit 7 — Motor Winding Characteristics

* = Factory assigned

Digit 8 — Volume Ratio

B = High Volume Ratio

Digit 9 — Refrigerant

1 = R-134a

Digits 10-11— Design Sequence

** = Factory assigned

Compressor Serial Number

Digits 1-2 — Year

YY = Last two digits of year of manufacture

Digit 3— Week

WW= Week of build, from 00 to 52

Digit 5 — Day

1 = Monday
2 = Tuesday
3 = Wednesday
4 = Thursday
5 = Friday
6 = Saturday
7 = sunday

Digits 6-8 — Coded Time Stamp

TTT = Used to ensure uniqueness of serial number

Digit 9 — Assembly Line

Assembly line compressor was built on. Varies with facility

Digit 10— Build Location

A = Monterrey

General Information

Unit Description

The 150-300 ton Stealth™ units are helical-rotary type, air-cooled liquid chillers designed for installation outdoors. The compressor circuits are completely assembled, hermetic packages that are factory-piped, wired, leak-tested, dehydrated, and tested for proper control operation before shipment.

Chilled water inlet and outlet openings are covered for shipment. The Stealth features Trane's exclusive Adaptive Control ™ logic, which monitors the control variables that govern the operation of the chiller unit. Adaptive Control logic can adjust capacity variables to avoid chiller shutdown when necessary, and keep producing chilled water. All unit sizes are available with two independent refrigerant circuits. A single refrigeration circuit option is available for 150 and 165T units. Each compressor is controlled by a variable speed Adaptive Frequency™ Drive Generation 3 (AFD_3). Each refrigerant circuit is provided with filter, sight glass, electronic expansion valve, and charging valves. The shell-and-tube type evaporator is manufactured in accordance with ASME standards or other international codes. Each evaporator is fully insulated and is equipped with water drain and vent connection. As an option, a convenience outlet can be supplied.

Units are shipped with full oil charge and can be ordered with either a factory refrigerant charge, or optional nitrogen charge.

Figure 2. Typical Stealth RTAE

Accessory/Option Information

Check all the accessories and loose parts which are shipped with the unit against the shipping list. Included in these items will be water vessel drain plugs, electrical diagrams, and service literature, which are placed inside the control panel for shipment.

If optional elastomeric isolators are ordered with unit (model number digit 36 = 1), they are shipped mounted on diagonal supports on the end of the unit opposite control panel. See Figure 3 and Figure 4.

If optional seismic isopads are selected (model number digit 36= 2), they will be shipped inside the unit control panel.

Figure 3. Elastomeric isolator shipping location

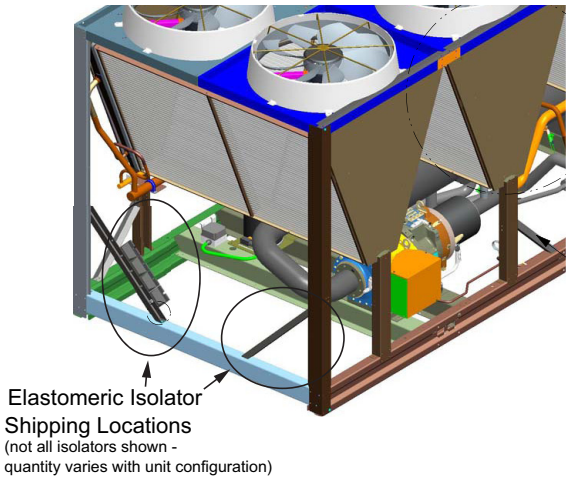

Figure 4. Elastomeric isolators attached for shipping

General Data

Table 1. General data table

Unit Size (tons)		150	165	180	200	225	250	275	300	150SC	165SC
Compressor Model		CHHSR	CHHSR	CHHSR	CHHSR	CHHSS	CHHSS	CHHSS	CHHSS	CHHSS	CHHSS
Quantity	#	2	2	2	2	2	2	2	2	1	1
Evaporator											
Water Storage	(gal)	17.5	18.7	21.9	23.9	26.6	28.7	33.0	36.0	17.3	17.3
	(L)	66.1	70.9	82.8	90.5	100.6	108.8	125.0	136.1	65.6	65.6
		2 Pass arrangement									
Minimum Flow	(gpm)	171	187	202	228	261	288	318	354	169	169
	(l/s)	10.8	11.8	12.7	14.4	16.5	18.2	20.1	22.3	10.7	10.7
Maximum Flow	(gpm)	626	684	742	835	957	1055	1165	1299	620	620
	(l/s)	39.5	43.1	46.8	52.7	60.4	66.5	73.5	81.9	39.1	39.1
		3 Pass arrangement									
Minimum Flow	(gpm)	114	124	135	152	174	192	212	236	113	113
	(l/s)	7.2	7.8	8.5	9.6	11.0	12.1	13.4	14.9	7.1	7.1
Maximum Flow	(gpm)	417	456	495	557	638	703	777	866	414	414
	(l/s)	26.3	28.8	31.2	35.1	40.2	44.3	49.0	54.6	26.1	26.1
Condenser											
Qty of Coils		8	10	10	12	12	12	14	16	8	10
Coil Length	(in)	78.74	78.74	78.74	78.74	78.74	78.74	78.74	78.74	78.74	78.74
	(mm)	2000	2000	2000	2000	2000	2000	2000	2000	2000	2000
Coil Height	(in)	50	50	50	50	50	50	50	50	50	50
	(mm)	1270	1270	1270	1270	1270	1270	1270	1270	1270	1270
Fins/Ft		192	192	192	192	192	192	192	192	192	192
Rows		3	3	3	3	3	3	3	3	3	3
Condenser Fans											
Quantity	#	8	10	10	12	12	12	14	16	8	10
Diameter	(in)	37.5	37.5	37.5	37.5	37.5	37.5	37.5	37.5	37.5	37.5
	(mm)	953	953	953	953	953	953	953	953	953	953
Total Airflow	(cfm)	107,392	134,240	134,240	161,088	161,088	161,088	187,936	214,784	107,392	132,240
	(m3/hr)	182,460	228,075	228,075	273,690	273,690	273,690	319,305	364,920	182,460	228,075
Tip Speed	(ft/min)	8700	8700	8700	8700	8700	8700	8700	8700	8700	8700
	(M/S)	44.2	44.2	44.2	44.2	44.2	44.2	44.2	44.2	44.2	44.2
Ambient Temperature Range											
Standard Ambient	°F (°C)	32 to 105 (0 to 40.6)									
Low Ambient	°F (°C)	0 to 105 (-17.7 to 40.6)									
Extreme Low Ambient	°F (°C)	-20 to 105 (-28.9 to 40.6)									
High Ambient	°F (°C)	32 to 125 (0 to 52)									
Wide Ambient	°F (°C)	0 to 125 (-17.7 to 52)									
General Unit											
Refrigerant		HFC-134a								HFC-134a	
Refrigerant Ckts	#	2								1	
Minimum Load	%	20	18	17	15	20	18	16	15	30	27
Refrigerant Charge/ckt	(lbs)	172	181	210	218	265	261	318	325	322	346
	(kg)	78	82	95	99	120	118	144	148	146	157
Oil		Trane OIL00311 (bulk)/OIL00315 (1 gal)/OIL00317 (5 gal)									
Oil Charge/ckt	(gal)	3.0	3.0	3.0	3.0	4.0	4.0	4.0	4.0	4.0	4.0
	(L)	11.4	11.4	11.4	11.4	15.1	15.1	15.1	15.1	15.1	15.1

Drive Cooling System

Drive cooling fluid volumes are dependent on unit configuration.

- Use Table 2 for units that meet the following criteria:
  - Model number digits 10, 11 = AA
- Use Table 2 for units that meet the following criteria:
  - Model number digits 10, 11 = AB
  - AND Digits 28, 29 = 0X
- Use Table 2 for units that meet the following criteria:
  - Model number digits 10, 11 = AC
  - AND Digits 3-7 = 225, 250, 275 or 300
  - AND Digit 22 = 1 or 2
  - AND Digits 28, 29 = 0X
- Use Table 3 for all other unit configurations.

Table 2. Drive cooling with load inductor

	Unit Size (tons)							
	Standard Length Unit							
	150		165-200		225-250		275-300	
	gal	l	gal	l	gal	l	gal	l
Fluid Type	Trane Heat Transfer Fluid CHM01023							
Fluid Volume								
Ckt 1	1.74	6.58	1.83	6.92	2.00	7.58	2.09	7.92
Ckt2	1.93	7.30	2.27	8.59	2.44	9.24	2.58	9.78
Total	3.67	13.88	4.10	15.51	4.44	16.82	4.67	17.69

Table 3. Drive cooling without load inductor

	Unit Size (tons)															
	Standard Length Unit								Extended Length Units[a]							
	150S - 165S		150		165-250		275-300		150S - 165S		150		165-250		275-300	
	gal	l	gal	l	gal	l	gal	l	gal	l	gal	l	gal	l	gal	l
Fluid Type	Trane Heat Transfer Fluid CHM01023															
Fluid Volume																
Ckt 1	1.28	4.86	1.14	4.30	1.23	4.64	1.32	4.98	1.37	5.20	1.30	4.93	1.32	4.98	1.41	5.33
Ckt2	n/a	n/a	1.32	5.01	1.67	6.31	1.81	6.84	n/a	n/a	1.67	6.31	1.81	6.84	1.95	7.38
Total	1.28	4.86	2.46	9.31	2.89	10.95	3.12	11.83	1.37	5.20	2.97	11.23	3.12	11.83	3.36	12.71

(a) Units are extended length if either of the following are selected:
Transformer (model number digit 28 = 1)
Harmonic Filtration Option (model number digit 29 = 1)
Units without Harmonic Filtration Option or Transformer (digits 28, 29 = 0X) are standard length.

NOTICE:

Equipment Damage!

Use only Trane Heat Transfer Fluid P/N CHM01023. This fluid is a direct use concentration and is not to be diluted. Do not top off with water or any other fluid. Use of unapproved fluids, or dilution of approved fluid could result in catastrophic equipment damage.

Non-Trane approved chemicals could react with system components and result in failure. Contact a qualified service technician and your local Trane Parts Center.

Note: *The use of incorrect compounds in the drive cooling system may result in scaling, erosion, corrosion or freezing. The Trane Company warranty specifically excludes liability for corrosion, erosion, freezing or deterioration of Trane equipment.*

Proper fluid level is important to the operation of the unit. See "Drive Cooling Expansion Tank," p. 71 for fluid level check instructions. The circuit capacities are shown in tables above.

If the level is below the recommended minimum levels, contact your local Trane office.

Note: *Drive cooling fluid service life is 5 years. See "Drive Cooling System," p. 71.*

Pre-Installation

Unit Inspection

When unit is delivered, verify it is the correct unit and is properly equipped. Compare information on the unit nameplate with ordering and submittal information. Inspect all exterior components for visible damage. Report any apparent damage or material shortage to carrier and make a "unit damage" notation on carrier's delivery receipt. Specify extent and type of damage found and notify Trane Sales Office. Do not proceed with installation of a damaged unit without sales office approval.

Inspection

To protect against loss due to damage in transit, complete the following steps upon receipt of unit.

- Inspect the individual pieces of the shipment before accepting the unit. Check for obvious damage to the unit or packing material.
- Inspect the unit for concealed damage as soon as possible after delivery and before it is stored. Concealed damage must be reported within 15 days.
- If concealed damage is discovered, stop unpacking the shipment. Do not remove damaged material from the receiving location. Take photos of the damage, if possible. The owner must provide reasonable evidence that the damage did not occur after delivery.
- Notify the carrier's terminal of the damage immediately, by phone and by mail. Request an immediate, joint inspection of the damage with the carrier and the consignee.

Notify Trane sales representative and arrange for repair. Do not repair unit until damage is inspected by the carrier's representative.

Storage

Extended storage of outdoor unit prior to installation requires these precautionary measures:

- Store the outdoor unit in a secure area.
- For units that have been charged with refrigerant, verify the following valves are closed on each circuit:
  - Suction service valve (butterfly valve)
  - Liquid line angle valve or EXV (EXV is driven closed whenever circuit is powered)
  - Oil line shutoff valves to brazed plate heat exchangers

Note: *Units with factory refrigerant charge (model number digit 15 = 1) are shipped with suction, liquid and oil line shutoff valves closed, isolating most of refrigerant charge in the evaporator. If unit goes directly into long term storage, it is recommended that these valve positions be confirmed.*

- For units with nitrogen charge option (model number digit 15 = 2), units are shipped with valves open. If unit goes directly into storage prior to refrigerant charge, confirm all service valves are open.

- At least every three months (quarterly), check the pressure in the refrigerant circuits to verify that the refrigerant charge is intact. If it is not, contact a qualified service organization and the appropriate Trane sales office.

Installation Requirements

A list of the contractor responsibilities typically associated with the unit installation process is provided in Table 4.

Table 4. Installation requirements

Type	Trane Supplied Trane Installed	Trane Supplied Field Installed	Field Supplied Field Installed
Foundation			• Meet foundation requirements
Rigging			• Safety chains • Clevis connectors • Lifting beam • Spreader bar
Disassembly/Reassembly (as required)[a]	• Trane, or an agent of Trane specifically authorized to perform start-up of Trane® products (contact your local Trane office for pricing)		
Isolation		• Elastomeric isolators (optional)	• Elastomeric isolators (optional)
Electrical	• Circuit breakers (optional) • Unit mounted starter		• Circuit breakers (optional) • Electrical connections to unit mounted starter • Wiring sizes per submittal and NEC • Terminal lugs • Ground connection(s) • BAS wiring (optional) • Control voltage wiring • Chilled water pump contactor and wiring • Option relays and wiring
Water piping	• Flow switch		• Taps for thermometers and gauges • Thermometers • Water flow pressure gauges • Isolation and balancing valves in water piping • Vents and drain • Waterside pressure relief valves • Water strainer
Insulation	• Insulation		• Insulation
Water Piping Connection Components	• Grooved pipe	• Flange kit (optional)	
Other Materials	• R-134a refrigerant • Dry nitrogen (optional)		
"Stealth™ RTAE Installation Completion Check Sheet and Request for Trane Service" (RLC-ADF002-EN, see "Log and Check Sheet," p. 90)			
Chiller Start-up Commissioning[b]	• Trane, or an agent of Trane specifically authorized to perform start-up of Trane® products		

(a) Trane, or an agent of Trane specifically authorized to perform start-up and warranty of Trane® products, will perform or have direct on-site supervision of the disassembly and reassembly work.
(b) Start-up must be performed by Trane or an agent of Trane specifically authorized to perform start-up and warranty of Trane® products. Contractor shall provide Trane (or an agent of Trane specifically authorized to perform start-up) with notice of the scheduled start-up at least two weeks prior to the scheduled start-up.

Dimensions and Weights

Weights

Table 5. Weights

Unit Size (tons)	Standard Length Unit Shipping lbs	Standard Length Unit Shipping kg	Standard Length Unit Operating lbs	Standard Length Unit Operating kg	Extended Length Unit[a] Shipping lbs	Extended Length Unit[a] Shipping kg	Extended Length Unit[a] Operating lbs	Extended Length Unit[a] Operating kg
InvisiSound™ Standard or Superior[b]								
150S	9436	4280	9596	4353	11013	4995	11173	5068
165S	10451	4741	10611	4813	12011	5448	12171	5521
150	11333	5141	11479	5207	13492	6120	13638	6186
165	12377	5614	12533	5685	14532	6592	14688	6662
180	12698	5760	12880	5843	14853	6737	15035	6820
200	13808	6263	14007	6354	15991	7254	16213	7354
225	15244	6915	15466	7015	17427	7905	17649	8005
250	15622	7086	15861	7195	17805	8076	18044	8185
275	16820	7630	17095	7754	18975	8607	19250	8732
300	17965	8149	18265	8285	20121	9127	20421	9263
InvisiSound Ultimate[c]								
150S	10236	4643	10396	4716	11813	5358	11973	5431
165S	11251	5103	11411	5176	12811	5811	12971	5884
150	12133	5504	12279	5570	14292	6483	14438	6549
165	13177	5977	13333	6048	15332	6955	15488	7025
180	13498	6123	13680	6205	15653	7100	15835	7183
200	14608	6626	14807	6716	16791	7616	17013	7717
225	16044	7278	16266	7378	18227	8268	18449	8368
250	16422	7449	16661	7557	18605	8439	18844	8548
275	17620	7992	17895	8117	19775	8970	20050	9095
300	18765	8512	19065	8648	20921	9490	21221	9626

(a) Units are extended length if either of the following are selected:
Transformer (model number digit 28 = 1)
Harmonic Filtration Option (model number digit 29 = 1)
Units without Harmonic Filtration Option or Transformer (digits 28, 29 = 0X) are standard length.
(b) Model number digit 12 = 1 or 2
(c) Model number digit 12 = 3

Unit Dimensions

See unit submittals for specific unit dimensions and water connection locations.

Service Clearances

Figure 5. RTAE service clearances - top view

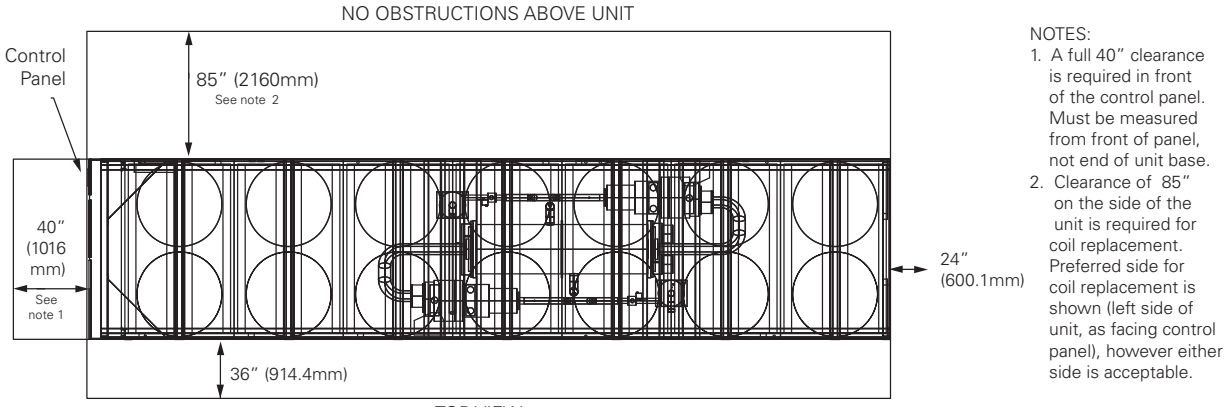

Installation Mechanical

Location Requirements

Sound Considerations

- Refer to *Trane Engineering Bulletin Chiller Sound Ratings and Installation Guide* RLC-PRB035-EN for sound consideration applications.
- Locate the unit away from sound-sensitive areas.
- Install the optional elastomeric isolators under the unit. See "Isolation and Sound Emission," p. 20.
- Chilled water piping should not be supported by chiller frame.
- Install rubber vibration isolators in all water piping.
- Use flexible electrical conduit.
- Seal all wall penetrations.

Note: *Consult an acoustical engineer for critical applications.*

Foundation

Provide rigid, non-warping mounting pads or a concrete foundation of sufficient strength and mass to support the applicable operating weight (i.e., including completed piping, and full operating charges of refrigerant, oil and water). See Table 5, p. 14 for unit operating weights. Once in place, the unit must be level within 1/4" (6.4 mm) across the length and width of the unit. The Trane Company is not responsible for equipment problems resulting from an improperly designed or constructed foundation.

Clearances

Provide enough space around the unit to allow the installation and maintenance personnel unrestricted access to all service points. See submittal drawings for the unit dimensions, to provide sufficient clearance for the opening of control panel doors and unit service. See Figure 5, p. 14 for minimum clearances. In all cases, local codes which require additional clearances will take precedence over these recommendations.

For close spacing information, see RLC-PRB037-EN.

Rigging

⚠WARNING

Improper Unit Lift!

Test lift unit approximately 24 inches to verify proper center of gravity lift point. To avoid dropping of unit, reposition lifting point if unit is not level. Failure to properly lift unit could result in unit dropping and possibly crushing operator/technician which could result in death or serious injury and possible equipment or property-only damage.

⚠WARNING

Heavy Objects!

Ensure that all the lifting equipment used is properly rated for the weight of the unit being lifted. Each of the cables (chains or slings), hooks, and shackles used to lift the unit must be capable of supporting the entire weight of the unit. Lifting cables (chains or slings) may not be of the same length. Adjust as necessary for even unit lift. Other lifting arrangements could cause equipment or property damage. Failure to follow instructions above or properly lift unit could result in unit dropping and possibly crushing operator/technician which could result in death or serious injury.

⚠WARNING

Proper Lifting Configuration Required!

Use only lift locations designated with label shown in Figure 6. Do NOT use locations marked with label shown in Figure 7. Use unit lifting configurations as shown in Table 6 and Figure 8, p. 16 thru Figure 10, p. 17. Other lifting arrangements could result in death, serious injury or equipment damage.

Figure 6. Label - lift location

Figure 7. Label - do not lift

Important:

- *Do not fork lift unit.*
- *See unit nameplate and/or unit submittal for total shipping weight.*
- *See Table 6 and Figure 8 thru Figure 10 for unit lifting configuration.*
- *See Table 7, p. 18 and Table 8, p. 19 for lift weights and dimensions at each lifting point locations.*
- *See Table 9, p. 20 for center of gravity information.*

Table 6. Lifting configuration selection

Tons	Unit Length[a]	Lift Configuration	See
150S, 165S, 150	Standard and Extended	4-point	Figure 8, p. 16
165, 180, 200, 225, 250	Standard		
165, 180, 200, 225, 250	Extended	6-point	Figure 9, p. 17
275	Standard		
275	Extended	8-point	Figure 10, p. 17
300	Standard and Extended		

(a) Units are extended length if either of the following are selected:
Transformer (model number digit 28 = 1)
Harmonic Filtration Option (model number digit 29 = 1)
Units without Harmonic Filtration Option or Transformer (digits 28, 29 = 0X) are standard length.

Figure 8. 4-point lift configuration

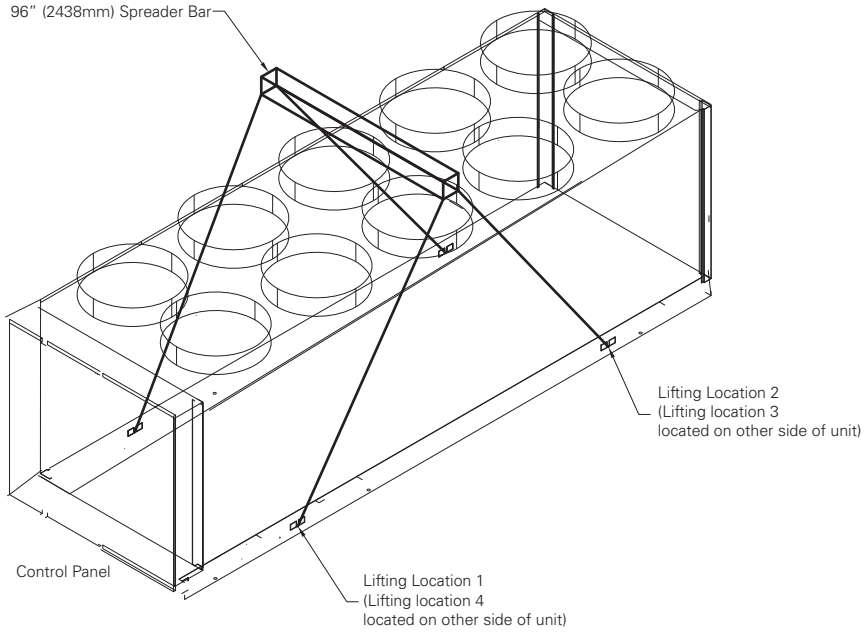

Figure 9. 6-point lift configuration

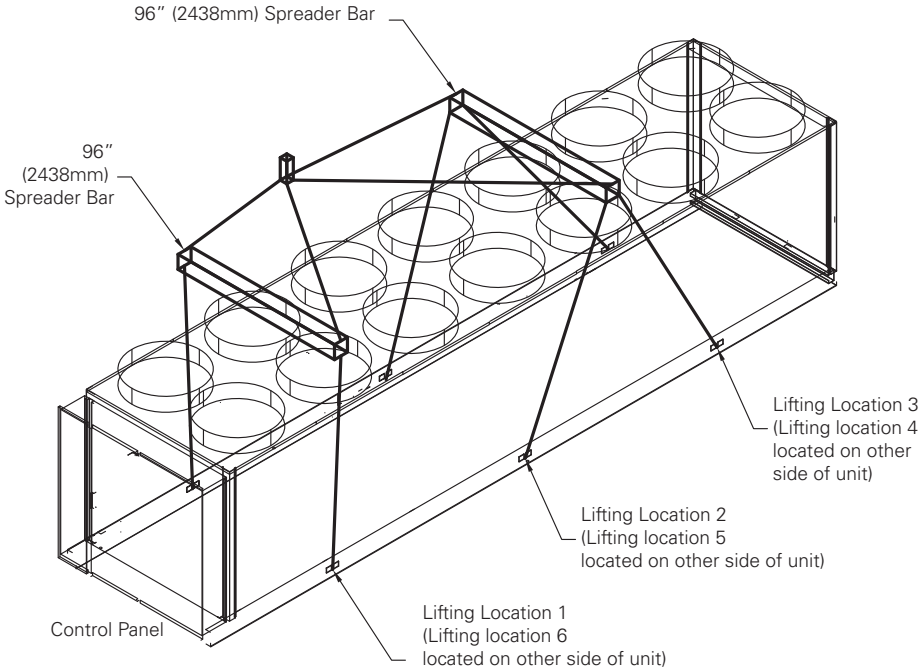

Figure 10. 8-point lift configuration

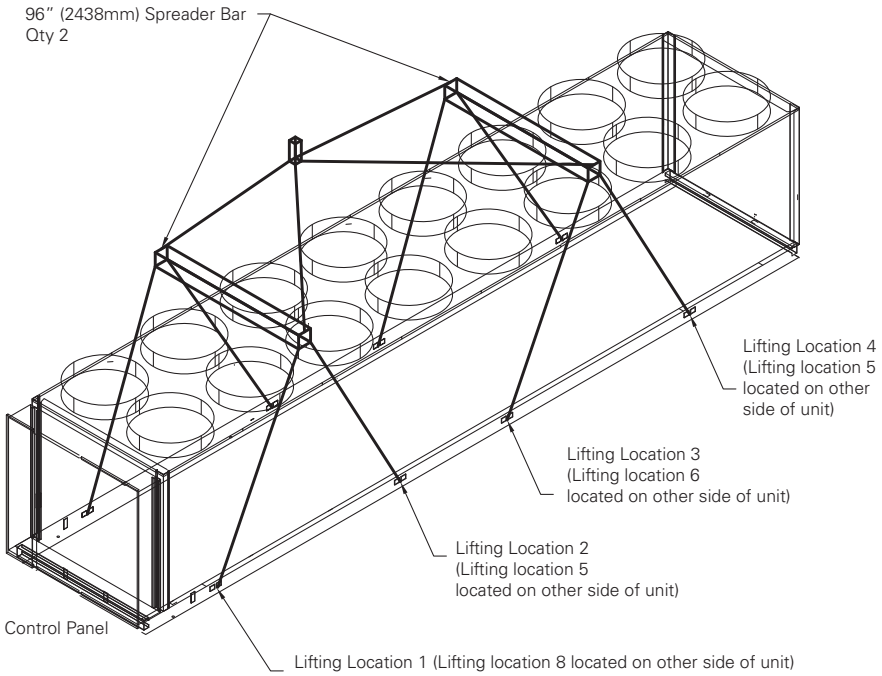

Table 7. Lift weights by location

	Location															
	1		2		3		4		5		6		7		8	
Tons	lb	kg	lb	kg	lb	kg	lb	kg	lb	kg	lb	kg	lb	kg	lb	kg
Standard Length Unit																
150S	2540	1152	2451	1112	2164	981	2281	1034	-	-	-	-	-	-	-	-
165S	2656	1205	2352	1067	2730	1238	2713	1230	-	-	-	-	-	-	-	-
150	3426	1554	2638	1197	2234	1014	3035	1377	-	-	-	-	-	-	-	-
165	3452	1566	2876	1304	2810	1275	3239	1469	-	-	-	-	-	-	-	-
180	3528	1600	2941	1334	2896	1314	3333	1512	-	-	-	-	-	-	-	-
200	3586	1627	3325	1508	3316	1504	3581	1624	-	-	-	-	-	-	-	-
225	4003	1816	3551	1611	3617	1641	4073	1847	-	-	-	-	-	-	-	-
250	4098	1859	3637	1650	3711	1683	4176	1894	-	-	-	-	-	-	-	-
275	2484	1127	1943	881	3683	1671	3829	1737	2255	1023	2625	1191	-	-	-	-
300	2061	935	2289	1038	2515	1141	1682	763	2729	1238	3008	1364	1737	788	1943	881
Extended Length Unit[a]																
150S	2698	1224	2597	1178	2837	1287	2881	1307	-	-	-	-	-	-	-	-
165S	2988	1356	2841	1289	3135	1422	3047	1382	-	-	-	-	-	-	-	-
150	3825	1735	3363	1525	2920	1324	3384	1535	-	-	-	-	-	-	-	-
165	2653	1203	2629	1192	2570	1166	1959	889	2046	928	2675	1213	-	-	-	-
180	2685	1218	2674	1213	2641	1198	1946	883	2100	953	2807	1273	-	-	-	-
200	2919	1324	2640	1198	2797	1269	2846	1291	2274	1032	2514	1141	-	-	-	-
225	3065	1391	2705	1227	3237	1468	3144	1426	2406	1091	2870	1302	-	-	-	-
250	3117	1414	2749	1247	3322	1507	3229	1465	2458	1115	2930	1329	-	-	-	-
275	2145	973	2668	1210	3279	1487	1513	686	2412	1094	2482	1126	1644	746	2831	1284
300	2056	933	2440	1107	3452	1566	2241	1017	3089	1401	2993	1358	1460	662	2389	1084

(a) Units are extended length if either of the following are selected:
Low Harmonic Distortion Option (model number digit 29 = 1)
Autotransformer (model number digit 28 = 1 or 2)
Units without Low Harmonic Distortion Option or Autotransformer (digits 28, 29 = X0) are standard length.

Table 8. Lifting locations (from control panel end of frame)

	Location															
	1		2		3		4		5		6		7		8	
Tons	in	mm	in	mm	in	mm	in	mm	in	mm	in	mm	in	mm	in	mm
Standard Length Unit																
150S	45.5	1156	45.5	1156	153.9	3909	153.9	3909	-	-	-	-	-	-	-	-
165S	23.5	596	23.5	596	189.7	4818	189.7	4818	-	-	-	-	-	-	-	-
150	39.6	1006	39.6	1006	171.4	4353	171.4	4353	-	-	-	-	-	-	-	-
165	60.4	1534	60.4	1534	224.6	5705	224.6	5705	-	-	-	-	-	-	-	-
180	60.4	1534	60.4	1534	224.6	5705	224.6	5705	-	-	-	-	-	-	-	-
200	53.3	1355	53.3	1355	258.7	6570	258.7	6570	-	-	-	-	-	-	-	-
225	53.3	1355	53.3	1355	258.7	6570	258.7	6570	-	-	-	-	-	-	-	-
250	53.3	1355	53.3	1355	258.7	6570	258.7	6570	-	-	-	-	-	-	-	-
275	75.8	1926	75.8	1926	190.7	4845	190.7	4845	311.9	7922	311.9	7922	-	-	-	-
300	47.6	1210	47.6	1210	171.3	4350	171.3	4350	242.8	6168	242.8	6168	365.1	9274	365.1	9274
Extended Length Unit[a]																
150S	23.5	596	23.5	596	207.1	5261	207.1	5261	-	-	-	-	-	-	-	-
165S	23.5	596	23.5	596	242.9	6170	242.9	6170	-	-	-	-	-	-	-	-
150	44.7	1136	44.7	1136	224.6	5705	224.6	5705	-	-	-	-	-	-	-	-
165	61.1	1552	61.1	1552	171.3	4350	171.3	4350	277.8	7057	277.8	7057	-	-	-	-
180	61.1	1552	61.1	1552	171.3	4350	171.3	4350	277.8	7057	277.8	7057	-	-	-	-
200	47.6	1210	47.6	1210	190.7	4845	190.7	4845	311.9	7922	311.9	7922	-	-	-	-
225	47.6	1210	47.6	1210	190.7	4845	190.7	4845	311.9	7922	311.9	7922	-	-	-	-
250	47.6	1210	47.6	1210	190.7	4845	190.7	4845	311.9	7922	311.9	7922	-	-	-	-
275	75.8	1926	75.8	1926	182.0	4623	182.0	4623	258.5	6565	258.5	6565	365.1	9274	365.1	9274
300	47.6	1210	47.6	1210	168.5	4280	168.5	4280	296.1	7520	296.1	7520	418.3	10626	418.3	10626

(a) Units are extended length if either of the following are selected:
Low Harmonic Distortion Option (model number digit 29 = 1)
Autotransformer (model number digit 28 = 1 or 2)
Units without Low Harmonic Distortion Option or Autotransformer (digits 28, 29 = X0) are standard length.

Center of Gravity

Figure 11. Center of gravity

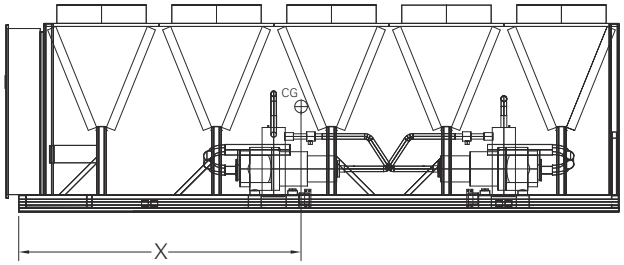

SIDE VIEW

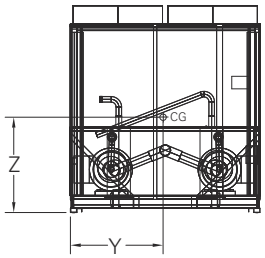

END VIEW
(Non-Control Panel End)

Table 9. Centers of gravity

	CGx		CGy		CGz	
Tons	in	mm	in	mm	in	mm
Standard Length Unit						
150S	96.6	2454	43.8	1112	40.4	1025
165S	110.0	2793	45.2	1149	42.8	1087
150	105.5	2679	43.9	1115	37.5	953
165	142.4	3617	43.9	1115	39.7	1008
180	142.8	3628	43.9	1115	39.4	1002
200	155.5	3951	43.9	1115	41.2	1047
225	156.1	3964	43.9	1115	39.8	1011
250	156.4	3973	43.9	1115	39.7	1008
275	194.1	4930	43.9	1115	41.1	1043
300	207.1	5260	43.9	1115	42.4	1076
Extended Length Unit[a]						
150S	118.8	3017	44.1	1121	37.2	944
165S	136.4	3464	44.7	1137	39.4	1002
150	134.7	3421	43.9	1115	33.3	846
165	169.1	4295	43.9	1115	35.4	898
180	169.9	4314	43.9	1115	35.2	894
200	181.6	4613	43.9	1115	36.9	937
225	183.6	4665	43.9	1115	36.0	915
250	184.2	4680	43.9	1115	36.0	913
275	220.2	5594	43.9	1115	37.4	950
300	232.3	5900	43.9	1115	38.7	984

(a) Units are extended length if either of the following are selected:
Low Harmonic Distortion Option (model number digit 29 = 1)
Autotransformer (model number digit 28 = 1 or 2)
Units without Low Harmonic Distortion Option or Autotransformer (digits 28, 29 = X0) are standard length.

Isolation and Sound Emission

The most effective form of isolation is to locate the unit away from any sound sensitive area. Structurally transmitted sound can be reduced by elastomeric vibration eliminators. Spring isolators are not recommended. Consult an acoustical engineer in critical sound applications.

For maximum isolation effect, isolate water lines and electrical conduit. Wall sleeves and rubber isolated piping hangers can be used to reduce the sound transmitted through water piping. To reduce the sound transmitted through electrical conduit, use flexible electrical conduit.

State and local codes on sound emissions should always be considered. Since the environment in which a sound source is located affects sound pressure, unit placement must be carefully evaluated. Sound power levels for Stealth chillers are available on request.

Unit Isolation and Leveling

For additional reduction of sound and vibration, install the optional elastomeric isolators.

Construct an isolated concrete pad for the unit or provide concrete footings at the unit mounting points. Mount the unit directly to the concrete pads or footings.

Level the unit using the base rail as a reference. The unit must be level within 1/4-in (6 mm) over the entire length and width. Use shims as necessary to level the unit.

Elastomeric Isolators (Optional for units without seismic rating)

Note: *See unit submittal, or Table 11, p. 21 thru Table 13, p. 23 for point weights, isolator location and isolator selections.*

1. Secure the isolators to the mounting surface using the mounting slots in the isolator base plate. Do not fully tighten the isolator mounting bolts at this time.
2. Align the mounting holes in the base of the unit with the threaded positioning pins on the top of the isolators.
3. Lower the unit onto the isolators and secure the isolator to the unit with a nut.
4. Level the unit carefully. Fully tighten the isolator mounting bolts.

Figure 12. Elastomeric isolator

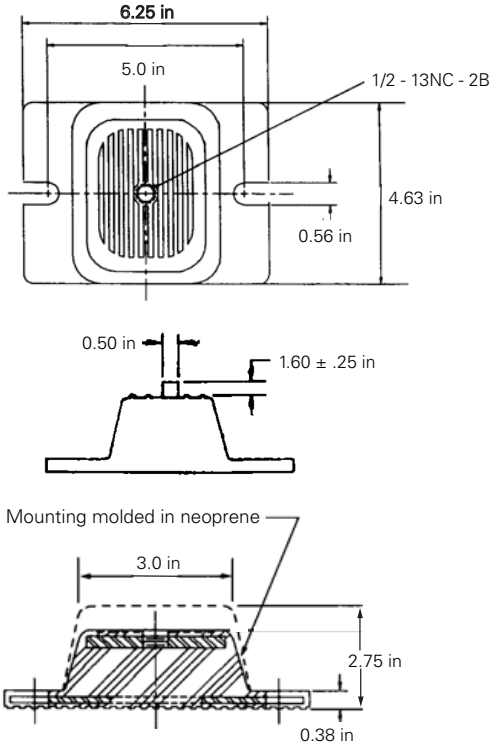

Max Load (lbs)	Color	Maximum Deflection (in)	Type
2250	RED	0.50	RDP-4
3000	GREEN	0.50	RDP-4

Elastomeric Isolation Pads for Seismic Option

Elastomeric pads ship inside the unit control panel. They are provided with an isolation washer and 3/4″ free hole in the center of the plate.

Figure 13. Seismic isolation pad — installed

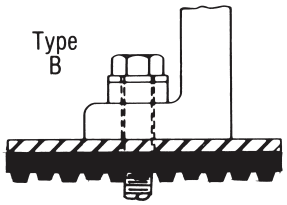

Table 10. Seismically rated elastomeric isolation pad

Model	Max Load	Dimension (in) Length	Width	Height
B-36	2520	6	6	.625

Figure 14. Mounting point locations[a]

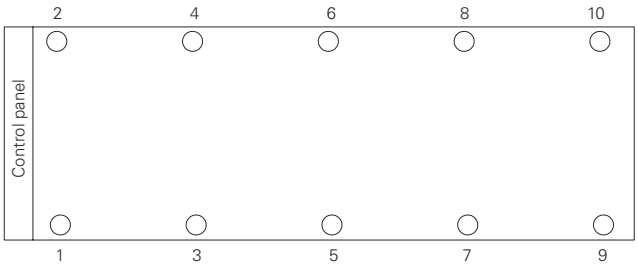

(a) Quantity of isolators varies with unit. Shorter units will not use locations 5 and 6. See submittal for actual number required for specific unit.

Table 11. Point weights

	Location																			
	1		2		3		4		5		6		7		8		9		10	
Tons	lb	kg	lb	kg	lb	kg	lb	kg	lb	kg	lb	kg	lb	kg	lb	kg	lb	kg	lb	kg
Standard Length																				
150S	1731	785	1664	755	1834	832	1773	804	1219	553	1375	624	-	-	-	-	-	-	-	-
165S	1666	756	1559	707	1886	855	1870	848	1914	868	1716	778	-	-	-	-	-	-	-	-
150	1452	659	1543	700	1326	602	1446	656	1464	664	1350	612	1490	676	1262	572	-	-	-	-
165	1539	698	1341	608	1622	736	1553	704	1657	752	1607	729	1522	690	1536	697	-	-	-	-
180	1536	697	1338	607	1676	760	1620	735	1709	775	1659	753	1579	716	1581	717	-	-	-	-
200	1442	654	1764	800	1696	769	1810	821	1836	833	1694	768	1986	901	1580	717	-	-	-	-
225	1430	649	1792	813	1999	907	2058	933	2111	958	1994	905	2139	970	1721	781	-	-	-	-
250	1426	647	1803	818	2064	936	2144	973	2182	990	2055	932	2195	996	1753	795	-	-	-	-
275	1624	737	1627	738	1802	817	1746	792	1795	814	1530	694	1653	750	1831	830	1577	715	1634	741
300	1634	741	1850	839	1871	849	1925	873	1898	861	1938	879	1887	856	1695	769	1752	795	1515	687

Table 11. Point weights (continued)

	Location																			
	1		2		3		4		5		6		7		8		9		10	
Tons	lb	kg	lb	kg	lb	kg	lb	kg	lb	kg	lb	kg	lb	kg	lb	kg	lb	kg	lb	kg
Extended Length Unit[a]																				
150S	1553	704	1795	814	1974	895	1959	889	2088	947	1804	818	-	-	-	-	-	-	-	-
165S	1344	610	1236	561	1537	697	1494	678	1686	765	1668	757	1636	742	1570	712	-	-	-	-
150	1563	709	1621	735	1705	773	1875	850	1952	885	1575	714	1601	726	1601	726	-	-	-	-
165	1776	806	1827	829	1956	887	1925	873	2058	933	1958	888	1517	688	1515	687	-	-	-	-
180	1774	805	1822	827	1990	903	1975	896	2128	965	2030	921	1577	715	1557	706	-	-	-	-
200	1706	774	1524	691	1662	754	1294	587	1938	879	1738	788	1267	575	1753	795	1457	661	1652	749
225	1857	842	1669	757	1844	836	1412	640	2156	978	1860	844	1378	625	1985	900	1501	681	1766	801
250	1852	840	1664	755	1885	855	1439	653	2219	1006	1936	878	1438	652	2046	928	1530	694	1795	814
275	1874	850	1860	844	1626	737	1700	771	2204	1000	2101	953	2017	915	2131	967	1820	826	1642	745
300	1946	883	1826	828	1854	841	1795	814	2143	972	2106	955	2408	1092	2338	1060	1808	820	1898	861

(a) Units are extended length if either of the following are selected:
Low Harmonic Distortion Option (model number digit 29 = 1)
Autotransformer (model number digit 28 = 1 or 2)
Units without Low Harmonic Distortion Option or Autotransformer (digits 28, 29 = X0) are standard length.

Table 12. Isolator locations[a]

	Location																			
	1		2		3		4		5		6		7		8		9		10	
Tons	in	mm	in	mm	in	mm	in	mm	in	mm	in	mm	in	mm	in	mm	in	mm	in	mm
Standard Length																				
150S	23.6	600	27.6	700	102.4	2600	94.5	2400	187.0	4750	187.0	4750	-	-	-	-	-	-	-	-
165S	15.7	400	23.0	585	98.4	2500	102.2	2595	196.9	5000	204.7	5200	-	-	-	-	-	-	-	-
150	24.4	620	11.8	300	47.2	1200	82.7	2100	100.4	2550	153.5	3900	188.2	4780	188.2	4780	-	-	-	-
165	17.7	450	23.0	585	98.6	2505	102.2	2595	155.5	3950	190.6	4840	242.1	6150	242.9	6170	-	-	-	-
180	17.7	450	23.0	585	98.6	2505	102.2	2595	155.5	3950	190.6	4840	242.1	6150	242.9	6170	-	-	-	-
200	23.6	600	23.6	600	102.4	2600	137.8	3500	155.5	3950	198.8	5050	255.9	6500	263.8	6700	-	-	-	-
225	23.6	600	23.6	600	102.4	2600	137.8	3500	155.5	3950	198.8	5050	255.9	6500	263.8	6700	-	-	-	-
250	23.6	600	23.6	600	102.4	2600	137.8	3500	155.5	3950	198.8	5050	255.9	6500	263.8	6700	-	-	-	-
275	21.7	550	18.9	480	141.3	3590	125.2	3180	196.1	4980	236.2	6000	236.2	6000	259.8	6598	328.0	8330	324.4	8240
300	19.7	500	27.6	700	143.1	3634	143.1	3634	202.4	5142	235.6	5984	257.9	6551	296.6	7534	347.8	8834	339.5	8624
Extended Length Unit[b]																				
150S	19.7	500	15.7	400	102.4	2600	133.9	3400	204.7	5200	208.7	5300	-	-	-	-	-	-	-	-
165S	23.6	600	23.6	600	86.6	2200	78.7	2000	149.6	3800	157.5	4000	259.8	6600	259.8	6600	-	-	-	-
150	25.0	635	23.6	600	84.6	2150	98.4	2500	147.6	3750	190.9	4850	240.2	6100	240.2	6100	-	-	-	-
165	19.7	500	19.7	500	129.9	3300	129.9	3300	204.7	5200	234.3	5950	293.3	7450	299.2	7600	-	-	-	-
180	19.7	500	19.7	500	129.9	3300	129.9	3300	204.7	5200	234.3	5950	293.3	7450	299.2	7600	-	-	-	-
200	25.6	650	19.7	500	118.1	3000	98.4	2500	208.7	5300	196.9	5000	255.9	6500	255.9	6500	315.0	8000	315.0	8000
225	25.6	650	19.7	500	118.1	3000	98.4	2500	208.7	5300	196.9	5000	255.9	6500	255.9	6500	315.0	8000	315.0	8000
250	25.6	650	19.7	500	118.1	3000	98.4	2500	208.7	5300	196.9	5000	255.9	6500	255.9	6500	315.0	8000	315.0	8000
275	6.3	160	9.8	250	177.2	4500	139.8	3550	198.8	5050	242.1	6150	309.1	7850	313.0	7950	354.3	9000	370.1	9400
300	9.8	250	9.8	250	177.2	4500	139.8	3550	206.7	5250	242.1	6150	311.8	7920	313.4	7960	393.7	10000	393.7	10000

(a) Dimensions are referenced from end of frame on the control panel side.
(b) Units are extended length if either of the following are selected:
Low Harmonic Distortion Option (model number digit 29 = 1)
Autotransformer (model number digit 28 = 1 or 2)
Units without Low Harmonic Distortion Option or Autotransformer (digits 28, 29 = X0) are standard length.

Table 13. Isolator selections

Tons	Location 1	2	3	4	5	6	7	8	9	10
Standard Length Unit										
150S	Red 62	Red 62	Red 62	Red 62	Red 62	Red 62	-	-	-	-
165S	Red 62	Red 62	Red 62	Red 62	Red 62	Red 62	-	-	-	-
150	Red 62	Red 62	Green 63	Green 63	Green 63	Green 63	Red 62	Red 62	-	-
165	Red 62	Red 62	Green 63	Green 63	Green 63	Green 63	Red 62	Red 62	-	-
180	Red 62	Red 62	Green 63	Green 63	Green 63	Green 63	Red 62	Red 62	-	-
200	Red 62	Red 62	Green 63	Green 63	Green 63	Green 63	Red 62	Red 62	-	-
225	Red 62	Red 62	Green 63	Green 63	Green 63	Green 63	Red 62	Red 62	-	-
250	Red 62	Red 62	Green 63	Green 63	Green 63	Green 63	Red 62	Red 62	-	-
275	Red 62	Red 62	Green 63	Green 63	Green 63	Green 63	Green 63	Green 63	Red 62	Red 62
300	Red 62	Red 62	Green 63	Green 63	Green 63	Green 63	Green 63	Green 63	Red 62	Red 62
Extended Length Unit[a]										
150S	Red 62	Red 62	Green 63	Green 63	Green 63	Red 62	-	-	-	-
165S	Red 62	Red 62	Red 62	Red 62	Red 62	Red 62	Red 62	Red 62	-	-
150	Red 62	Red 62	Green 63	Green 63	Green 63	Green 63	Red 62	Red 62	-	-
165	Red 62	Red 62	Green 63	Green 63	Green 63	Green 63	Red 62	Red 62	-	-
180	Red 62	Red 62	Green 63	Green 63	Green 63	Green 63	Red 62	Red 62	-	-
200	Red 62	Red 62	Green 63	Green 63	Green 63	Green 63	Green 63	Green 63	Red 62	Red 62
225	Red 62	Red 62	Green 63	Green 63	Green 63	Green 63	Green 63	Green 63	Red 62	Red 62
250	Red 62	Red 62	Green 63	Green 63	Green 63	Green 63	Green 63	Green 63	Red 62	Red 62
275	Red 62	Red 62	Green 63	Green 63	Green 63	Green 63	Green 63	Green 63	Red 62	Red 62
300	Red 62	Red 62	Green 63	Green 63	Green 63	Green 63	Green 63	Green 63	Red 62	Red 62

(a) Units are extended length if either of the following are selected:
Low Harmonic Distortion Option (model number digit 29 = 1)
Autotransformer (model number digit 28 = 1 or 2)
Units without Low Harmonic Distortion Option or Autotransformer (digits 28, 29 = X0) are standard length.

Compressor Shipping Bolt Removal

Units with InvisiSound™ Ultimate Option (Model Number Digit 12 = 3)

For chillers built with InvisiSound Ultimate option, compressor shipping bolts must be removed to assure minimum noise during operation. Use a 24mm socket to remove the (3) M15 x 75mm shipping bolts for each compressor. They are located under compressor mounting feet. See Figure 15.

Important:

- *DO NOT DISCARD SHIPPING BOLTS. Store bolts in the control panel for future use.*
- *All shipping bolts MUST be reinstalled prior to compressor removal or unit move.*

NOTICE:

Equipment Damage!

Do not remove compressor or move unit without reattaching compressor shipping bolts. Failure to reinstall bolts could cause shifting of parts and result in equipment damage.

Figure 15. Compressor shipping bolt removal

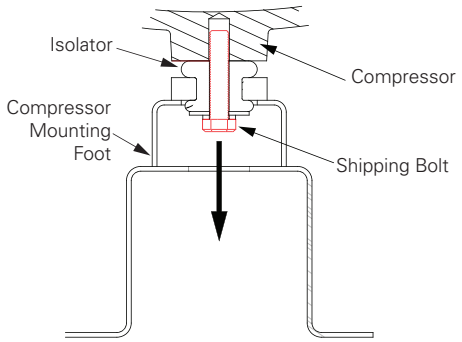

Drainage

Locate the unit near a large capacity drain for water vessel drain-down during shutdown or repair. Evaporators are provided with drain connections. A vent on top of evaporator waterbox prevents vacuum by allowing air into evaporator for complete drainage. All local and national codes apply.

Evaporator Piping

RTAE units are available with 2 or 3 pass configurations.
See Figure 16.

Figure 16. Evaporator pass configurations

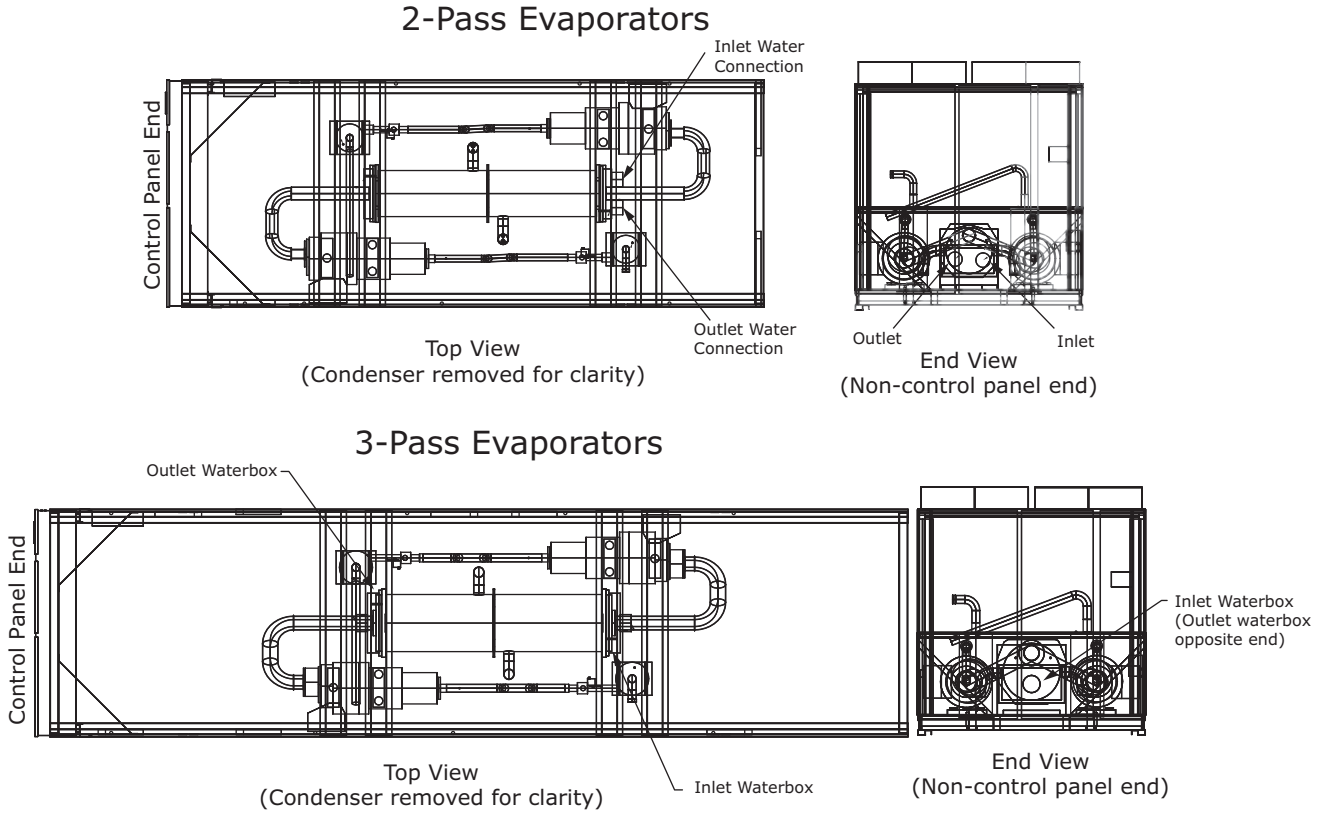

NOTICE:

Proper Water Treatment!

The use of untreated or improperly treated water could result in scaling, erosion, corrosion, algae or slime. It is recommended that the services of a qualified water treatment specialist be engaged to determine what water treatment, if any, is required. Trane assumes no responsibility for equipment failures which result from untreated or improperly treated water, or saline or brackish water.

NOTICE:

Evaporator Damage!

The chilled water connections to the evaporator are to be "victaulic" type connections. Do not attempt to weld these connections, as the heat generated from welding can cause microscopic and macroscopic fractures on the cast iron waterboxes that can lead to premature failure of the waterbox. To prevent damage to chilled water components, do not allow evaporator pressure (maximum working pressure) to exceed 150 psig (10.5 bar).

Evaporator water connections are grooved.

Thoroughly flush all water piping to the unit before making the final piping connections to the unit.

Components and layout will vary slightly, depending on the location of connections and the water source.

A vent is provided on the top of the evaporator at the chilled water inlet. Be sure to provide additional vents at high points in the piping to bleed air from the chilled water system. Install necessary pressure gauges to monitor the entering and leaving chilled water pressures.

Provide shutoff valves in lines to the gauges to isolate them from the system when they are not in use. Use rubber vibration eliminators to prevent vibration transmission through the water lines.

If desired, install thermometers in the lines to monitor entering and leaving water temperatures. Install a balancing valve in the leaving water line to control water flow balance. Install shutoff valves on both the entering and leaving water lines so that the evaporator can be isolated for service

Evaporator Piping Components

Piping components include all devices and controls used to provide proper water system operation and unit operating safety. SeeThese components and their general locations are given below.

Figure 17. Typical Stealth™ water piping

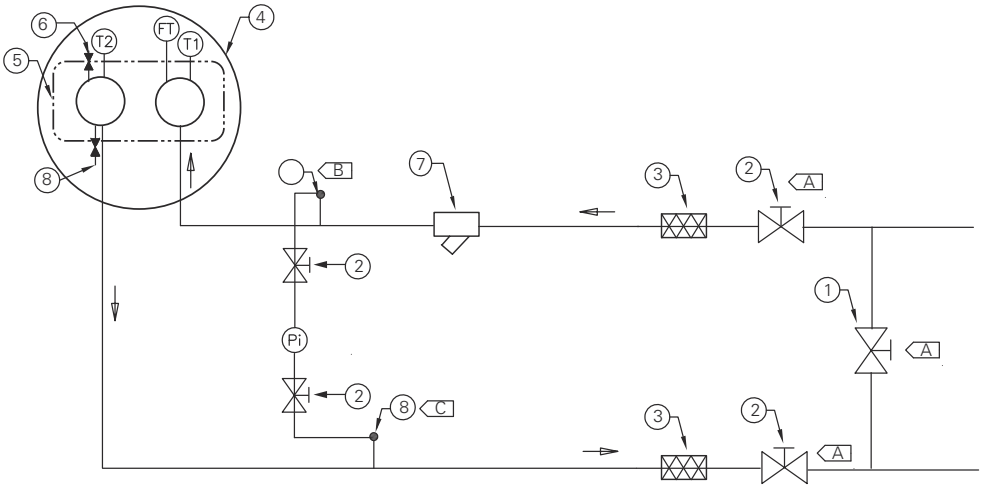

Table 14. Water piping components

Item	Description	Item	Description
1	Bypass Valve	Pi	Pressure Gauge
2	Isolation Valve	FT	Water Flow Switch
3	Vibration Eliminator	T1	Evap Water Inlet Temp Sensor
4	Evaporator - End View (2-pass)	T2	Evap Water Outlet Temp Sensor
5	Evaporator Waterbox (2-pass)		**NOTES**
6	Vent	A	Isolate unit for initial water loop cleaning
7	Strainer	B	Vent must be installed at the high point of the line
8	Drain	C	Drain must be installed at the low point of the line

Entering Chilled Water Piping

- Air vents (to bleed air from system).
- Water pressure gauges with shutoff valves.
- Vibration eliminators.
- Shutoff (isolation) valves. Thermometers (if desired).
- Clean-out tees.
- Pipe strainer.

Leaving Chilled Water Piping

- Air vents (to bleed air from system).
- Water pressure gauges with shutoff valves.
- Vibration eliminators.
- Shutoff (isolation) valves.
- Thermometers.
- Clean-out tees.
- Balancing valve.

Drains

A 1/2" drain connection is located under outlet end of evaporator waterbox for drainage during unit servicing. A shutoff valve must be installed on drain line.

Pressure Gauges

Install field-supplied pressure components as shown in Figure 17, p. 25. Locate pressure gauges or taps in a straight run of pipe; avoid placement near elbows, etc. Be sure to install the gauges at the same elevation on each shell if the shells have opposite-end water connections.

To read manifolded pressure gauges, open one valve and close the other (depending upon the reading desired). This eliminates errors resulting from differently calibrated gauges installed at unmatched elevations.

Pressure Relief Valves

NOTICE:

Evaporator Damage!

To prevent shell damage, install pressure relief valves in the evaporator water system.

Install a water pressure relief valve in the evaporator inlet piping between the evaporator and the inlet shutoff valve, as shown in Figure 17, p. 25. Water vessels with close-coupled shutoff valves have a high potential for hydrostatic pressure buildup on a water temperature increase. Refer to applicable codes for relief valve installation guidelines.

Evaporator Flow Switch

NOTICE:

Equipment Damage!

Flow switch is on a 24V circuit. Do NOT apply 120V to the flow switch. Incorrect voltage application could cause damage to the flow switch.

The flow switch is factory-installed and programmed based on the operating conditions submitted with the order. The leaving evaporator temperature, fluid type and fluid concentration affect the selected flow switch. If the operating conditions on the job site change, the flow switch may need to be replaced. Contact your local Trane Sales office for more information.

The sensor head includes 3 LEDs, two yellow and one green. Wait 15 seconds after power is applied to the sensor before evaluating LEDs for flow status. When wired correctly and flow is established, only the green LED should be lit. Following are the LED indicators:

- Green ON, both yellow OFF — Flow
- Green and outside yellow ON — No Flow
- Center yellow ON continuously — Miswire

Factory installed jumper wire W11 must be removed if using auxiliary contacts and/or additional proof of flow. See schematics in RTAE-SVE01*-EN for more details.

NOTICE:

Equipment Damage!

Incorrect wiring of auxiliary contacts could cause equipment damage.

If using auxiliary flow sensing, both yellow LEDs come on initially when flow is stopped. The center yellow LED will turn off after approximately 7 seconds. The LED indicators are otherwise the same as indicated above.

Indexing Flow Switch

To properly index the flow switch, the following requirements must be met:

- The dot must be at a position no greater than 90° off Index.
- The torque must be between 22 ft-lb minimum and 74 ft-lb maximum.
- A minimum distance of 5x pipe diameter must be maintained between flow switch and any bends, valves, changes in cross sections, etc.

Figure 18. Proper flow switch indexing

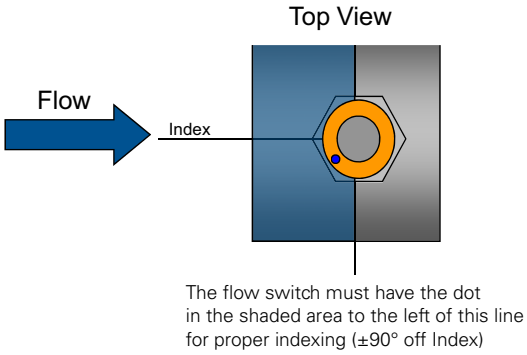

Evaporator Waterside Pressure Drop Curves

Figure 19. Evaporator waterside pressure drop curve — 2-pass

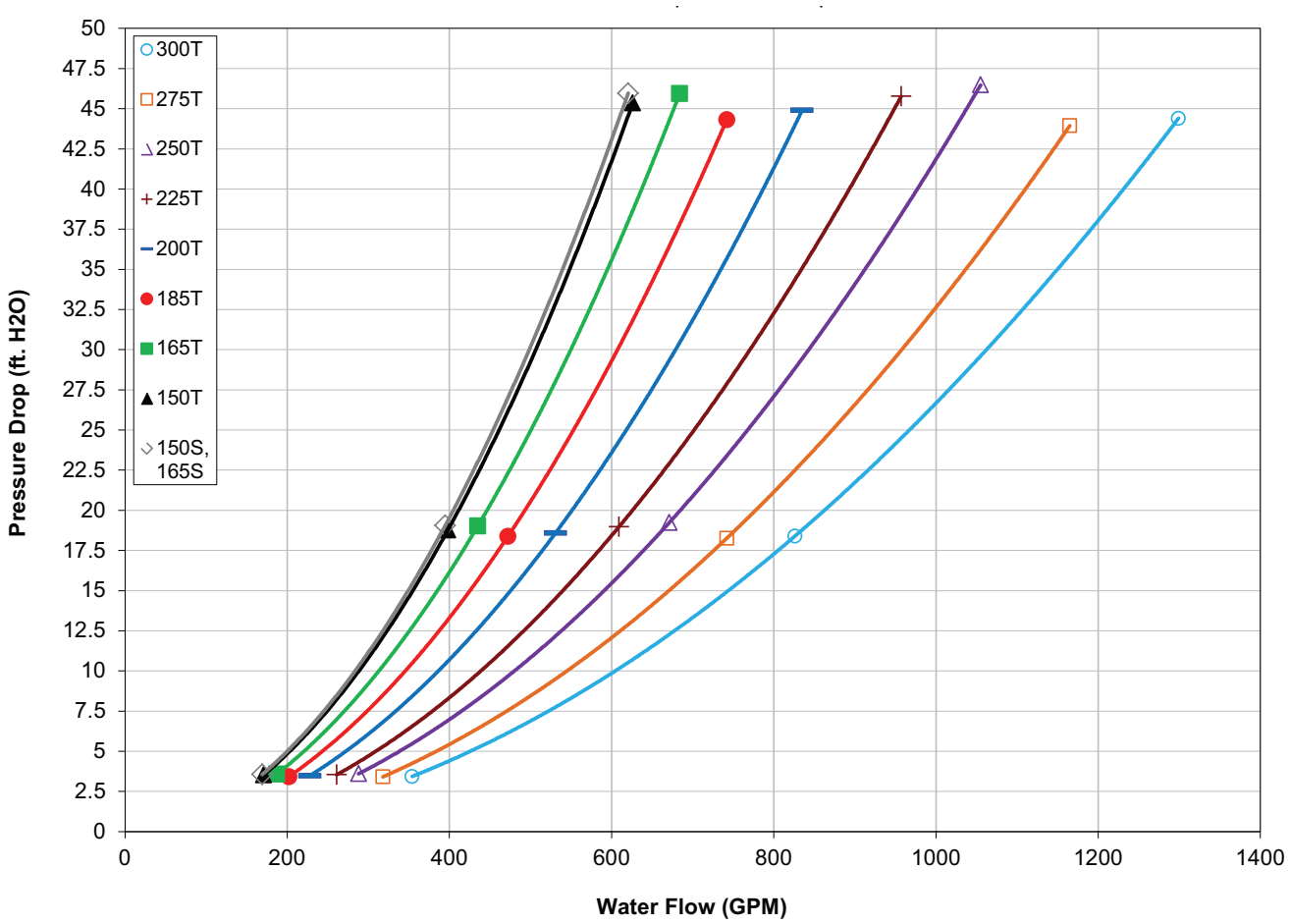

Figure 20. Evaporator waterside pressure drop curve — 3-pass

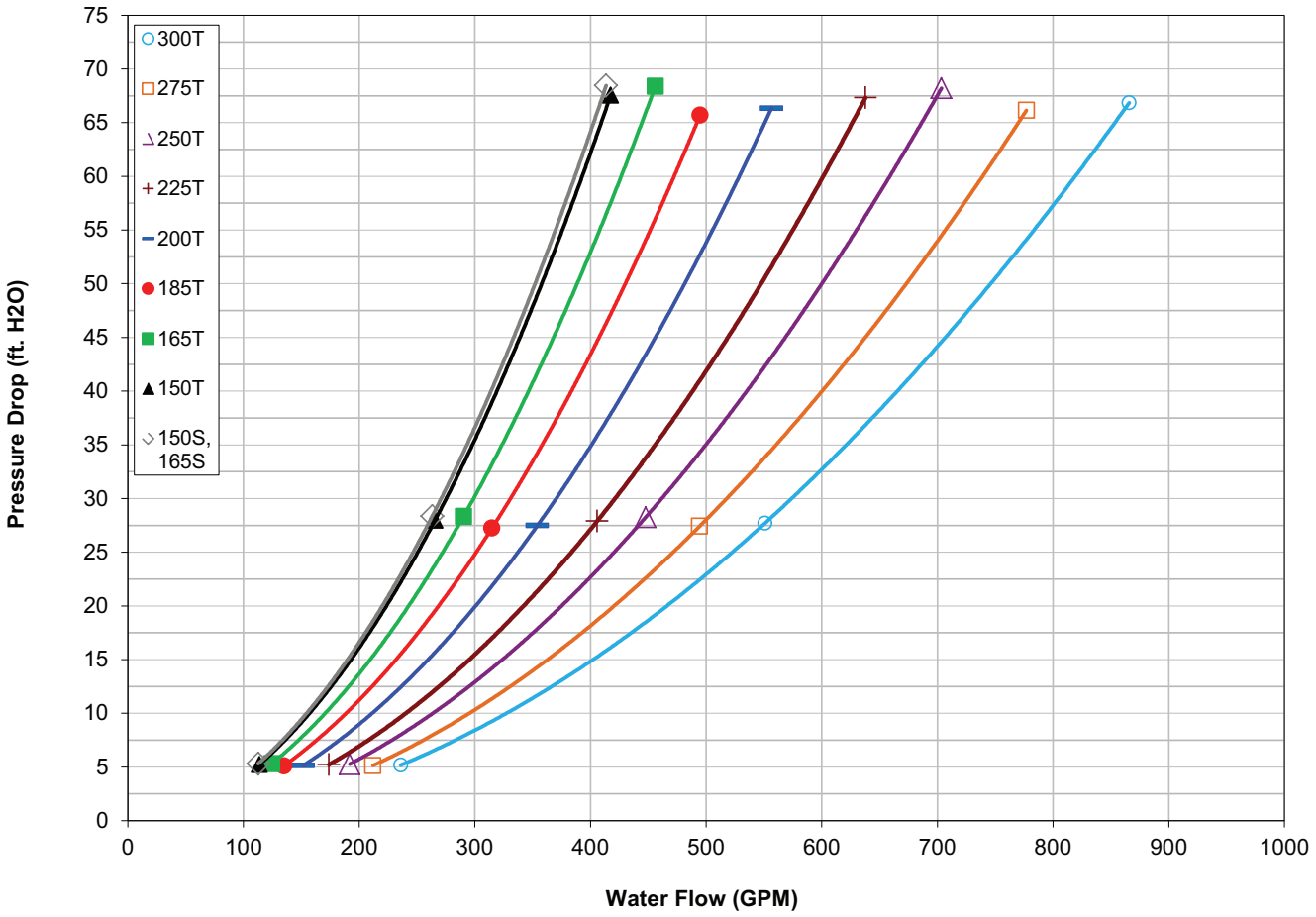

Freeze Protection

One or more of the ambient freeze avoidance methods in Table 15 must be used to protect the Stealth chiller from ambient freeze damage.

Table 15. RTAC freeze avoidance methods

Method	Protects to ambient temperature	Notes
Water Pump Control AND Heaters	Down to -20°F	• ***Heaters alone will provide low ambient protection down to -20°F (-29°C), but will NOT protect the evaporator from freezing as a result of charge migration. Therefore, it is required that water pump control be used in conjunction with heaters.*** • Heaters are factory-installed on the evaporator and water piping and will protect them from freezing • Install heat tape on all water piping, pumps, and other components that may be damaged if exposed to freezing temperatures. Heat tape must be designed for low ambient temperature applications. Heat tape selection should be based on the lowest expected ambient temperature. • Tracer™ UC800 controller can start the pump when freezing conditions are detected. For this option the pump must to be controlled by the Stealth unit and this function must be validated. • Water circuit valves need to stay open at all times. • ***Water pump control and heater combination will protect the evaporator down to any ambient temperature provided power is available to the pump and the controller. This option will NOT protect the evaporator in the event of a power failure to the chiller unless backup power is supplied to the necessary components.*** • When no chiller operation is possible and the pump is already off, UC800 pump control for freeze protection will command the pump to turn: **ON** if average of the evaporator entering water temperature, the evaporator leaving water temperature, and the evaporator refrigerant pool temperature is less than Low Evaporator Refrigerant Temperature Cutout (LERTC) + 4°F for a period of time. **OFF** again if the evaporator refrigerant pool temperature rises above the LERTC + 6°F for a period of time. *Note: Time period referenced for ON and Off conditions above is dependent on past running conditions and present temperatures measured.* **ON** if entering OR leaving water temperature< LWTC for 30°F-sec (17°C-sec) **OFF** again if water temperature > LWTC for 30 min
Freeze Inhibitor	Varies. See "Low Evaporator Refrigerant Cutout, Glycol Requirements," p. 30	• Freeze protection can be accomplished by adding sufficient glycol to protect against freezing below the lowest ambient expected. • ***Use of glycol type antifreeze reduces the cooling capacity of the unit and must be considered in the design of the system specifications.***
Drain Water Circuit	Below -20°F	• Shut off the power supply to the unit and to all heaters. • Purge the water circuit. • Blow out the evaporator to ensure no liquid is left in the evaporator.

NOTICE:

Evaporator Damage!

If insufficient concentration or no glycol is used, the evaporator water flow must be controlled by the UC800 AND heaters must be used to avoid catastrophic damage to the evaporator due to freezing. It is the responsibility of the installing contractor and/or the customer to ensure that a pump will start when called upon by the chiller controls. Refer to RLC-PRB012-EN. Even with water pump control, a power loss of as little as 15 minutes under freezing conditions can damage the evaporator. Only the proper addition of freeze inhibitor or complete drainage of the water circuit can ensure no evaporator damage in the event of a power failure.

Low Evaporator Refrigerant Cutout, Glycol Requirements

The table below shows the low evaporator temperature cutout for different glycol levels. Additional glycol beyond the recommendations will adversely effect unit performance. The unit efficiency will be reduced and the saturated evaporator temperature will be reduced. For some operating conditions this effect can be significant.

If additional glycol is used, then use the actual percent glycol to establish the low refrigerant cutout setpoint.

Note: *Table below is not a substitute for full unit simulation for proper prediction of unit performance for specific operating conditions. For information on specific conditions, contact Trane product support.*

Table 16. Low evaporator refrigerant temperature cutout (LERTC) and low water temperature cutout (LWTC)

Ethylene Glycol				Propylene Glycol			
Glycol Percentage (%)	Solution Freeze Point (°F)	Minimum Recommended LERTC (°F)	Minimum Recommended LWTC (°F)	Glycol Percentage (%)	Solution Freeze Point (°F)	Minimum Recommended LERTC (°F)	Minimum Recommended LWTC (°F)
0	32.0	28.6	35.0	0	32.0	28.6	35.0
2	31.0	27.6	34.0	2	31.0	27.6	34.0
4	29.7	26.3	32.7	4	29.9	26.5	32.9
5	29.0	25.6	32.0	5	29.3	25.9	32.3
6	28.3	24.9	31.3	6	28.7	25.3	31.7
8	26.9	23.5	29.9	8	27.6	24.2	30.6
10	25.5	22.1	28.5	10	26.4	23.0	29.4
12	23.9	20.5	26.9	12	25.1	21.7	28.1
14	22.3	18.9	25.3	14	23.8	20.4	26.8
15	21.5	18.1	24.5	15	23.1	19.7	26.1
16	20.6	17.2	23.6	16	22.4	19.0	25.4
18	18.7	15.3	21.7	18	20.9	17.5	23.9
20	16.8	13.4	19.8	20	19.3	15.9	22.3
22	14.7	11.3	17.7	22	17.6	14.2	20.6
24	12.5	9.1	15.5	24	15.7	12.3	18.7
25	11.4	8.0	14.4	25	14.8	11.4	17.8
26	10.2	6.8	13.2	26	13.8	10.4	16.8
28	7.7	4.3	10.7	28	11.6	8.2	14.6
30	5.1	1.7	8.1	30	9.3	5.9	12.3
32	2.3	-1.1	5.3	32	6.8	3.4	9.8
34	-0.7	-4.1	5.0	34	4.1	0.7	7.1
35	-2.3	-5.0	5.0	35	2.7	-0.7	5.7
36	-3.9	-5.0	5.0	36	1.3	-2.1	5.0
38	-7.3	-5.0	5.0	38	-1.8	-5.0	5.0
40	-10.8	-5.0	5.0	40	-5.2	-5.0	5.0
42	-14.6	-5.0	5.0	42	-8.8	-5.0	5.0
44	-18.6	-5.0	5.0	44	-12.6	-5.0	5.0
45	-20.7	-5.0	5.0	45	-14.6	-5.0	5.0
46	-22.9	-5.0	5.0	46	-16.7	-5.0	5.0
48	-27.3	-5.0	5.0	48	-21.1	-5.0	5.0
50	-32.1	-5.0	5.0	50	-25.8	-5.0	5.0

Installation Electrical

General Recommendations

As you review this manual, keep in mind that:

- All field-installed wiring must conform to National Electric Code (NEC) guidelines, and any applicable state and local codes. Be sure to satisfy proper equipment grounding requirements per NEC.
- Compressor motor and unit electrical data (including motor kW, voltage utilization range, rated load amps) is listed on the chiller nameplate.
- All field-installed wiring must be checked for proper terminations, and for possible shorts or grounds.
- All electrical enclosures on CE marked chillers (unit model number digit 13 = C) have an environmental rating of IP53.

Note: *Always refer to wiring diagrams shipped with chiller or unit submittal for specific electrical schematic and connection information.*

⚠WARNING

Hazardous Voltage w/Capacitors!

Disconnect all electric power, including remote disconnects and discharge all motor start/run and AFD (Adaptive Frequency™ Drive) capacitors before servicing. Follow proper lockout/tagout procedures to ensure the power cannot be inadvertently energized.

- **For variable frequency drives or other energy storing components provided by Trane or others, refer to the appropriate manufacturer's literature for allowable waiting periods for discharge of capacitors. Verify with an appropriate voltmeter that all capacitors have discharged.**
- **DC bus capacitors retain hazardous voltages after input power has been disconnected. Follow proper lockout/tagout procedures to ensure the power cannot be inadvertently energized. After disconnecting input power, wait five (5) minutes for the DC capacitors to discharge, then check the voltage with a voltmeter. Make sure DC bus capacitors are discharged (0 VDC) before touching any internal components.**

Failure to follow these instructions could result in death or serious injury.

For additional information regarding the safe discharge of capacitors, see **"Adaptive Frequency™ Drive (AFD3) Capacitor Discharge," p. 32** *and PROD-SVB06A-EN.*

⚠WARNING

Hazardous Voltage - Pressurized Burning Fluid!

The motors in the compressors have strong permanent magnet motors and have the capability to generate voltage during situations when the refrigerant charge is being migrated. This potential will be present at the motor terminals and at the output of the variable speed drives in the power panel.

Before removing compressor terminal box cover for servicing, or servicing power side of control panel, CLOSE COMPRESSOR DISCHARGE SERVICE VALVE and disconnect all electric power including remote disconnects. Discharge all motor start/run capacitors. Follow lockout/tagout procedures to ensure the power cannot be inadvertently energized. Verify with an appropriate voltmeter that all capacitors have discharged.

The compressor contains hot, pressurized refrigerant. Motor terminals act as a seal against this refrigerant. Care should be taken when servicing NOT to damage or loosen motor terminals.

Do not operate compressor without terminal box cover in place.

Failure to follow all electrical safety precautions could result in death or serious injury.

For additional information regarding the safe discharge of capacitors, see **"Adaptive Frequency™ Drive (AFD3) Capacitor Discharge," p. 32** *and PROD-SVB06A-EN.*

⚠WARNING

Proper Field Wiring and Grounding Required!

All field wiring MUST be performed by qualified personnel. Improperly installed and grounded field wiring poses FIRE and ELECTROCUTION hazards. To avoid these hazards, you MUST follow requirements for field wiring installation and grounding as described in NEC and your local/state electrical codes. Failure to follow code could result in death or serious injury.

NOTICE:

Use Copper Conductors Only!

Unit terminals are not designed to accept other types of conductors. Failure to use copper conductors could result in equipment damage.

Important: *To prevent control malfunctions, do not run low voltage wiring (<30 V) in conduit with conductors carrying more than 30 volts.*

Adaptive Frequency™ Drive (AFD_3) Capacitor Discharge

After disconnecting input power, wait five (5) minutes for the DC capacitors to discharge.

Using voltmeter, measure voltage on bus at bus indicator module tabs 1 and 2, accessed through slots in protective cover on drive. See Figure 21, p. 32 for location of bus indicator module on the AFD drive. See Figure 22, p. 32 for details of bus indicator module. Capacitors are fully discharged when voltage across these tabs measures 0 VDC.

Figure 21. AFD board - indicator location

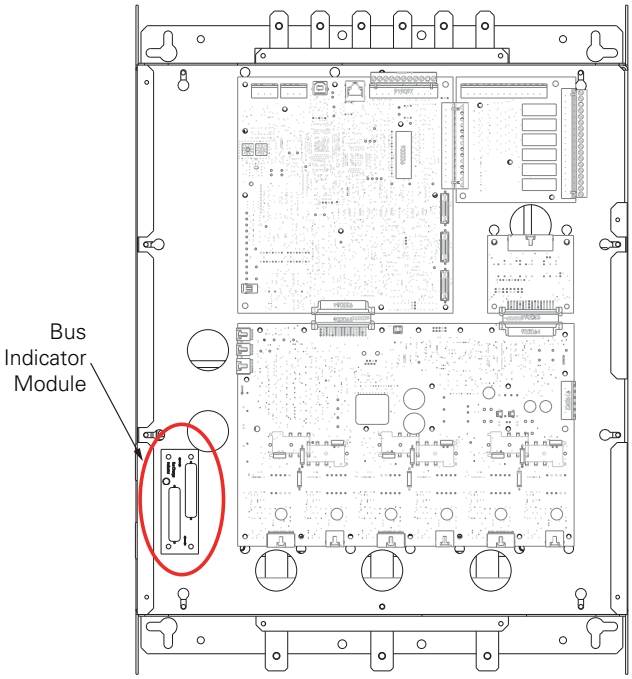

Figure 22. Bus indicator module detail

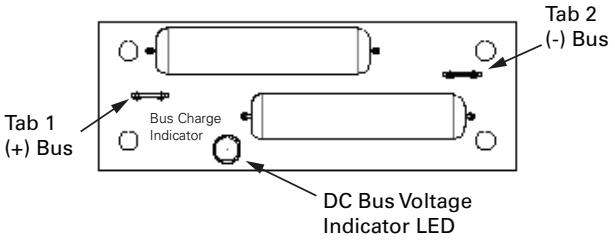

Units with Nitrogen Charge Option

For units with nitrogen charge option (model number digit 15 = 2), the unit must NOT have shore power, or unit power applied until the unit has been charged. Applying power will drive EXV valves closed, and will inhibit sufficient vac for unit charging.

Installer-Supplied Components

Customer wiring interface connections are shown in the electrical schematics and connection diagrams that are shipped with the unit. The installer must provide the following components if not ordered with the unit:

- Power supply wiring (in conduit) for all field-wired connections.
- All control (interconnecting) wiring (in conduit) for field supplied devices.
- Fused-disconnect switches or circuit breakers.

Power Supply Wiring

⚠WARNING

Proper Field Wiring and Grounding Required!

All field wiring MUST be performed by qualified personnel. Improperly installed and grounded field wiring poses FIRE and ELECTROCUTION hazards. To avoid these hazards, you MUST follow requirements for field wiring installation and grounding as described in NEC and your local/state electrical codes. Failure to follow code could result in death or serious injury.

⚠WARNING

Hazardous Voltage w/Capacitors!

Disconnect all electric power, including remote disconnects and discharge all motor start/run capacitors before servicing. Follow proper lockout/tagout procedures to ensure the power cannot be inadvertently energized. For variable frequency drives or other energy storing components provided by Trane or others, refer to the appropriate manufacturer's literature for allowable waiting periods for discharge of capacitors. Verify with an appropriate voltmeter that all capacitors have discharged. Failure to disconnect power and discharge capacitors before servicing could result in death or serious injury.

DC bus capacitors retain hazardous voltages after input power has been disconnected. Follow proper lockout/tagout procedures to ensure the power cannot be inadvertently energized. After disconnecting input power, wait five (5) minutes for the DC capacitors to discharge and then check the voltage with a voltmeter to ensure the dc bus capacitors are discharged before touching any internal components. Failure to observe this precaution could result in death or serious injury.

For additional information regarding the safe discharge of capacitors, see **"Adaptive Frequency™ Drive (AFD_3) Capacitor Discharge," p. 32** *and PROD-SVB06A-EN.*

All power supply wiring must be sized and selected accordingly by the project engineer in accordance with NEC Table 310-16.

All wiring must comply with local codes and the National Electrical Code. The installing (or electrical) contractor must provide and install the system interconnecting wiring, as well as the power supply wiring. It must be properly sized and equipped with the appropriate fused disconnect switches.

The type and installation location(s) of the fused disconnects must comply with all applicable codes.

NOTICE:

Use Copper Conductors Only!

Unit terminals are not designed to accept other types of conductors. Failure to use copper conductors could result in equipment damage.

Incoming customer power location varies with unit configurations.

- Control Panel (see Figure 23)
  - Standard length units (model number digits 28, 29 = 0X)
  - Units with optional harmonic filtration (model number digit 29 = 1)
- Transformer (see Figure 24, p. 34)
  - 200, 230 or 575 V units with transformer (model number digit 28 = 1)

Figure 23. Incoming customer power - control panel

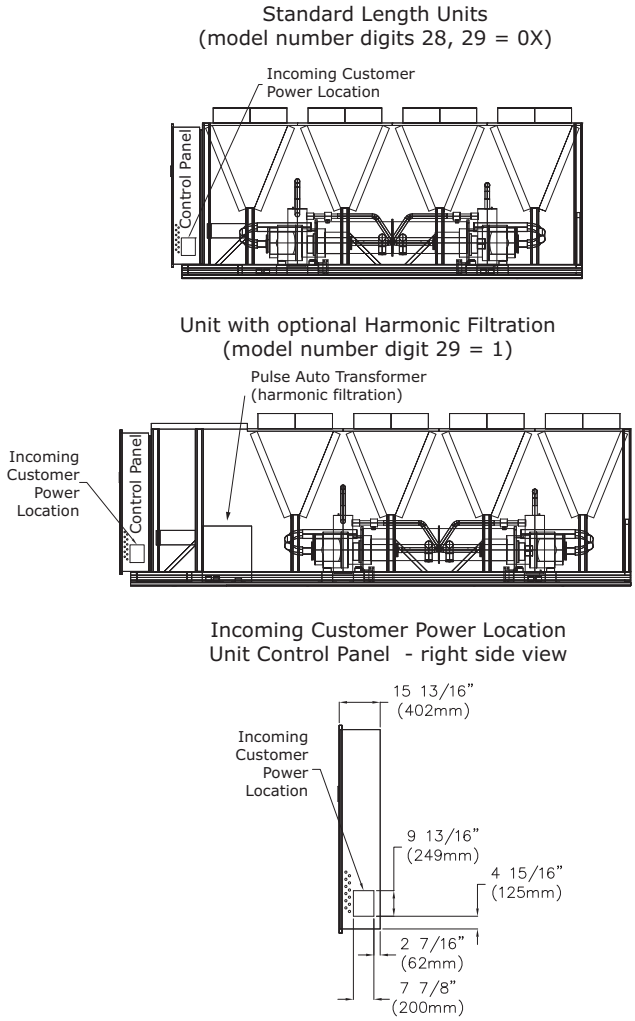

Figure 24. Incoming customer power - transformer

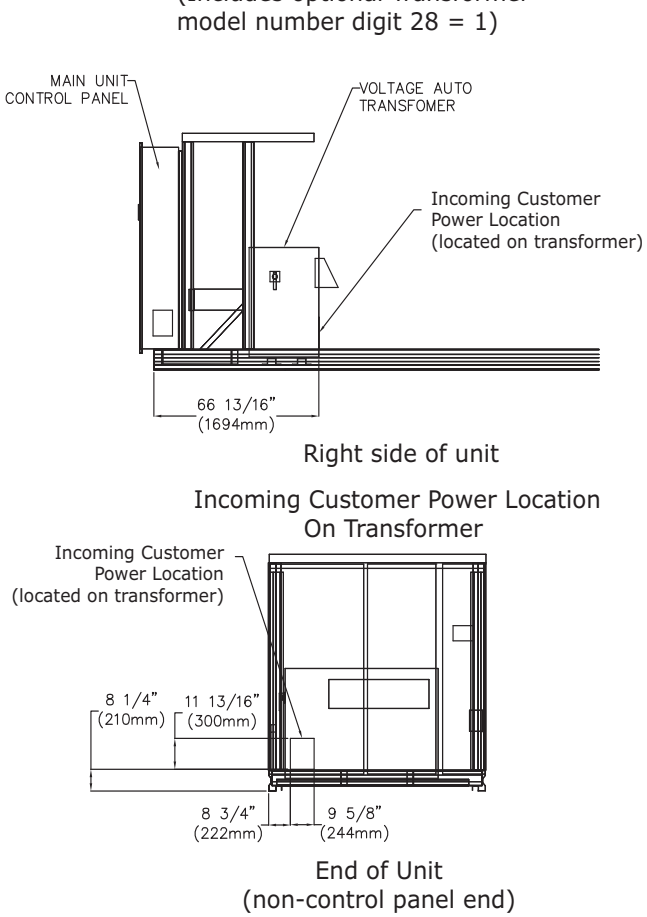

Cut holes into the location shown above for the appropriately-sized power wiring conduits. The wiring is passed through these conduits and connected to the terminal blocks, optional unit-mounted disconnects, or HACR type breakers.

The high voltage field-provided connections are made through patch plate on the right side of the main control panel or on the right side of the voltage autotransformer panel.

The low voltage connections are made through knockouts provided on the left side of the control panel. Additional grounds may be required for each 115 volt power supply to the unit. Green lugs are provided for 115V customer wiring.

Control Power Supply

The unit is equipped with a control power transformer. It is not necessary to provide additional control power voltage to the unit. No other loads should be connected to the control power transformer.

All units are factory-connected for appropriate labeled voltages.

Service Power Connection

The service power connection is a touch safe procedure to allow for binding the control system and LLIDs. Service power connection allows for a NEMA 5-15 style extension cord to power on Class 2 devices (i.e. UC800, LLIDs, EXVs, and TD7 display) with an external power source, without the need of line voltage applied to the unit. This connection is to be made at 1XJ50. The extension cord power source is required to have upstream current protection rated at no more than 10A. The required voltage for the service power connection is 115V at 60Hz and 110V at 50Hz.

Heater Power Supply

The evaporator shell is insulated from ambient air and protected from freezing temperatures by thermostatically-controlled immersion heaters. See Table 17 for evaporator heater summary. Whenever the water temperature drops to approximately 37°F (2.8°C), the thermostat energizes the heaters. The heaters will provide protection from ambient temperatures down to -20°F (-29°C).

NOTICE:

Equipment Damage!

Control panel main processor does not verify thermostat operation. A qualified technician must confirm operation of the thermostat to avoid catastrophic damage to the evaporator.

Table 17. Evaporator heater summary

	Waterboxes	
Unit Size (tons)	**Supply**	**Return**
2-pass Evaporator		
150-165	400W	400W
180-200	400W (Qty 2)	400W
225-300	600W	600W
3-pass Evaporator		
All sizes	400W (Qty 2)	400W

Interconnecting Wiring

Chilled Water Pump Control

NOTICE:

Equipment Damage!

If the microprocessor calls for a pump to start and water does not flow, the evaporator may be damaged catastrophically. It is the responsibility of the installing contractor and/or the customer to ensure that a pump will always be running when called upon by the chiller controls.

An evaporator water pump output relay closes when the chiller is given a signal to go into the Auto mode of operation from any source. The contact is opened to turn off the pump in the event of most machine level diagnostics to prevent the build up of pump heat.

The relay output is required to operate the Evaporator Water Pump (EWP) contactor. Contacts should be compatible with 115/240 VAC control circuit. Normally, the EWP relay follows the AUTO mode of the chiller. Whenever the chiller has no diagnostics and is in the AUTO mode, regardless of where the auto command is coming from, the normally open relay is energized. When the chiller exits the AUTO mode, the relay is timed to open in an adjustable (using TechView) 0 to 30 minutes. The non-AUTO modes in which the pump is stopped, include Reset, Stop, External Stop, Remote Display Stop, Stopped by Tracer, Start Inhibited by Low Ambient Temp, and Ice Building complete.

Table 18. Pump Relay Operation

Chiller Mode	Relay Operation
Auto	Instant Close
Ice Building	Instant Close
Tracer Override	Close
Stop	Timed Open
Ice Complete	Instant Open
Diagnostics	Instant Operation[(a)]
Chiller Shutdown Diagnostics (except freeze protection)	Instant Open
Freeze Protection related chiller shutdown diagnostics	Delayed/Dependent Open
Chiller Off Cycle Freeze Diagnostics	Instant Close – Dependent Open

(a) Operation can be instant open or instant close, depending on diagnostic.

When going from Stop to Auto, the EWP relay is energized immediately. If evaporator water flow is not established in 20 minutes (for normal transition) or 4 minutes, 15 seconds (for pump commanded ON due to an override safety), the UC800 de-energizes the EWP relay and generates a non-latching diagnostic. If flow returns (e.g. someone else is controlling the pump), the diagnostic is cleared, the EWP is re-energized, and normal control resumed.

If evaporator water flow is lost once it had been established, the EWP relay remains energized and a non-latching diagnostic is generated. If flow returns, the diagnostic is cleared and the chiller returns to normal operation.

In general, when there is either a non-latching or latching diagnostic, the EWP relay is turned off as though there was a zero time delay. Exceptions whereby the relay continues to be energized occur with:

- **Low Chilled Water Temperature diagnostic** (non-latching unless also accompanied by an Evap Leaving Water Temperature Sensor Diagnostic)

or

- **Interrupt Failure —AFDxA diagnostic** (where x is either 1 or 2 to indicate which drive is affected), in which a compressor continues to draw current even after commanded to have shutdown.

or

- **Loss of Evaporator Water Flow diagnostic** (non-latching) and the unit is in the AUTO mode, after initially having proven evaporator water flow.

Programmable Relays

A programmable relay concept provides for enunciation of certain events or states of the chiller, selected from a list of likely needs, while only using four physical output relays, as shown in the field wiring diagram. The four relays are provided (generally with a Quad Relay Output LLID) as part of the Programmable Relay Option. The relay's contacts are isolated Form C (SPDT), suitable for use with 120 VAC circuits drawing up to 2.8 amps inductive, 7.2 amps resistive, or 1/3 HP and for 240 VAC circuits drawing up to 0.5 amp resistive.

The list of events/states that can be assigned to the programmable relays can be found in Table 19. The relay will be energized when the event/state occurs.

Table 19. Alarm and status relay output configuration table

	Description
Alarm - Latching	This output is true whenever there is any active latching shutdown diagnostic that targets the Unit, Circuit, or any of the Compressors on a circuit.
Alarm - NonLatching	This output is true whenever there is any active non-latching shutdown diagnostic that targets the Unit, Circuit, or any of the Compressors on a circuit.
Alarm	This output is true whenever there is any active latching or non-latching shutdown diagnostic that targets the Unit, Circuit, or any of the Compressors on a circuit.

Table 19. Alarm and status relay output configuration table (continued)

	Description
Alarm Ckt 1	This output is true whenever there is any active latching or non-latching shutdown diagnostic that targets Circuit 1, or any of the Compressors on Circuit
Alarm Ckt 2	This output is true whenever there is any active latching or non-latching shutdown diagnostic that targets Circuit 2, or any of the Compressors on Circuit 2.
Unit Limit Mode	This output is true whenever a circuit on the unit has been running in one of the limit modes continuously for the Limit Relay debounce time. A given limit or overlapping of different limits must be in effect continuously for the debounce time prior to the output becoming true. It will become false if no limits are present for the debounce time.
Compressor Running	The output is true whenever any compressor is running.
Circuit 1 Running	The output is true whenever any compressor of Circuit 1 is running.
Circuit 2 Running	The output is true whenever any compressor of Circuit 2 is running.
Maximum Capacity	The output is true whenever the unit has reached maximum capacity continuously for the Max Capacity Relay debounce time. The output is false when the unit is not at maximum capacity continuously for the filter debounce time.
Head Pressure Relief Request	This relay output is energized anytime the chiller or a single circuit on the chiller is running in one of the following modes; Ice Making Mode, or Condenser Pressure Limit continuously for the duration specified by the Chiller Head Relief Relay Filter Time. The Chiller Head Relief Relay Filter Time is a service setpoint. The relay output is de-energized anytime the chiller exits all above modes continuously for the duration specified by the same Chiller Head Relief Relay Filter Time

Relay Assignments Using Tracer™ TU

Tracer™ TU Service Tool is used to install the Programmable Relay Option package and assign any of the above list of events or status to each of the four relays provided with the option. (See "Tracer™ TU," p. 55 for more information on the Tracer TU service tool.) The relays to be programmed are referred to by the relay's terminal numbers on the LLID board 1K13.

The default assignments for the four available relays of the Programmable Relay option are:

Table 20. Default assignments

Relay	
Relay 0Terminals J2-1,2,3:	Unit Limit Mode
Relay 1Terminals J2-4,5,6:	Maximum Capacity
Relay 2Terminals J2 - 7,8,9:	Compressor Running
Relay 3Terminals J2 -10,11,12:	Alarm

If any of the Alarm/Status relays are used, provide electrical power, 115 VAC with fused-disconnect to the panel and wire through the appropriate relays (terminals on 1K13 (EUR=A4-5)). Provide wiring (switched hot, neutral, and ground connections) to the remote annunciation devices. Do not use power from the chiller's control panel transformer to power these remote devices. Refer to the field diagrams which are shipped with the unit.

Low Voltage Wiring

The remote devices described below require low voltage wiring. All wiring to and from these remote input devices to the Control Panel must be made with shielded, twisted pair conductors. Be sure to ground the shielding only at the panel.

Important: *To prevent control malfunctions, do not run low voltage wiring (<30 V) in conduit with conductors carrying more than 30 volts.*

Emergency Stop

UC800 provides auxiliary control for a customer specified/installed latching trip out. When this customer-furnished remote contact 5K35 is provided, the chiller will run normally when the contact is closed. When the contact opens, the unit will trip on a manually resettable diagnostic. This condition requires manual reset at the front of the control panel.

Connect low voltage leads to terminal strip locations on 1K2. Refer to the field diagrams that are shipped with the unit.

Silver or gold-plated contacts are recommended. These customer-furnished contacts must be compatible with 24 VDC, 12 mA resistive load.

External Auto/Stop

If the unit requires the external Auto/Stop function, the installer must provide leads from the remote contacts 5K34 to the proper terminals of the LLID 1K2 on the control panel.

The chiller will run normally when the contacts are closed. When either contact opens, the compressor(s), if operating, will go to the RUN:UNLOAD operating mode and cycle off. Unit operation will be inhibited. Closure of the contacts will permit the unit to return to normal operation.

Field-supplied contacts for all low voltage connections must be compatible with dry circuit 24 VDC for a 12 mA resistive load. Refer to the field diagrams that are shipped with the unit.

External Circuit Lockout – Circuit #1 and #2

UC800 provides auxiliary control of a customer specified or installed contact closure, for individual operation of either Circuit #1 or #2. If the contact is closed, the refrigerant circuit will not operate 5K32 and 5K33.

Upon contact opening, the refrigerant circuit will run normally. This feature is used to restrict total chiller operation, e.g. during emergency generator operations.

Connections to 1K3 are shown in the field diagrams that are shipped with the unit.

These customer-supplied contact closures must be compatible with 24 VDC, 12 mA resistive load. Silver or gold plated contacts are recommended.

Ice Building Option

UC800 provides auxiliary control for a customer specified/installed contact closure for ice building if so configured and enabled. This output is known as the Ice Building Status Relay. The normally open contact will be closed when ice building is in progress and open when ice building has been normally terminated either through Ice Termination setpoint being reached or removal of the Ice Building command. This output is for use with the ice storage system equipment or controls (provided by others) to signal the system changes required as the chiller mode changes from "ice building" to "ice complete". When contact 5K36 is provided, the chiller will run normally when the contact is open.

UC800 will accept either an isolated contact closure (External Ice Building command) or a Remote Communicated input (Tracer) to initiate and command the Ice Building mode.

UC800 also provides a "Front Panel Ice Termination Setpoint", settable through Tracer™ TU, and adjustable from 20 to 31°F (-6.7 to -0.5°C) in at least 1°F (1°C) increments.

Note: *When in the Ice Building mode, and the evaporator entering water temperature drops below the ice termination setpoint, the chiller terminates the Ice Building mode and changes to the Ice Building Complete Mode.*

NOTICE:

Equipment Damage!

Freeze inhibitor must be adequate for the leaving water temperature. Failure to do so will result in damage to system components.

Tracer™ TU must also be used to enable or disable Ice Machine Control. This setting does not prevent the Tracer from commanding Ice Building mode.

Upon contact closure, the UC800 will initiate an ice building mode, in which the unit runs fully loaded at all times. Ice building shall be terminated either by opening the contact or based on the entering evaporator water temperature. UC800 will not permit the ice building mode to be reentered until the unit has been switched out of ice building mode (open 5K36 contacts) and then switched back into ice building mode (close 5K36 contacts.)

In ice building, all limits (freeze avoidance, evaporator, condenser, current) will be ignored. All safeties will be enforced.

If, while in ice building mode, the unit gets down to the freeze stat setting (water or refrigerant), the unit will shut down on a manually resettable diagnostic, just as in normal operation.

Connect leads from 5K36 to the proper terminals of 1K8. Refer to the field diagrams which are shipped with the unit.

Silver or gold-plated contacts are recommended. These customer furnished contacts must be compatible with 24 VDC, 12 mA resistive load.

External Chilled Water Setpoint (ECWS) Option

The UC800 provides inputs that accept either 4-20 mA or 2-10 VDC signals to set the external chilled water setpoint (ECWS). This is not a reset function. The input defines the setpoint. This input is primarily used with generic BAS (building automation systems). The chilled water setpoint set via the Tracer AdaptiView™ TD7 or through digital communication with Tracer (Comm3). The arbitration of the various chilled water setpoint sources is described in the flow charts at the end of the section.

The chilled water setpoint may be changed from a remote location by sending either a 2-10 VDC or 4-20 mA signal to the 1K14, terminals 5 and 6 LLID. 2-10 VDC and 4-20 mA each correspond to a 10 to 65°F (-12 to 18°C) external chilled water setpoint.

The following equations apply:

Voltage Signal	
As generated from external source	VDC=0.1455*(ECWS) + 0.5454
As processed by UC800	ECWS=6.875*(VDC) - 3.75
Current Signal	
As generated from external source	mA=0.2909(ECWS) + 1.0909
As processed by UC800	ECWS=3.4375(mA) - 3.75

If the ECWS input develops an open or short, the LLID will report either a very high or very low value back to the main processor. This will generate an informational diagnostic and the unit will default to using the Front Panel (TD7) Chilled Water Setpoint.

Tracer TU Service Tool is used to set the input signal type from the factory default of 2-10 VDC to that of 4-20 mA. Tracer TU is also used to install or remove the External Chilled Water Setpoint option as well as a means to enable and disable ECWS.

External Demand Limit Setpoint (EDLS) Option

Similar to the above, the UC800 also provides for an optional External Demand Limit Setpoint that will accept either a 2-10 VDC (default) or a 4-20 mA signal. The Demand Limit Setting can also be set via the Tracer AdaptiView™ TD7 or through digital communication with

Tracer (Comm 3). The arbitration of the various sources of demand limit is described in the flow charts at the end of this section. The External Demand Limit Setpoint may be changed from a remote location by hooking up the analog input signal to the 1K14 LLID terminals 2 and 3. Refer to the following paragraph on Analog Input Signal Wiring Details. The following equations apply for EDLS:

	Voltage Signal	Current Signal
As generated from external source	VDC+0.133*(%)-6.0	mA=0.266*(%)-12.0
As processed by UCM	%=7.5*(VDC)+45.0	%=3.75*(mA)+45.0

If the EDLS input develops an open or short, the LLID will report either a very high or very low value back to the man processor. This will generate an informational diagnostic and the unit will default to using the Front Panel (Tracer AdaptiView™ TD7) Current Limit Setpoint.

The Tracer™ TU Service Tool must be used to set the input signal type from the factory default of 2-10 VDC to that of 4-20 mA current. Tracer TU must also be used to install or remove the External Demand Limit Setpoint Option for field installation, or can be used to enable or disable the feature (if installed).

EDLS and ECWS Analog Input Signal Wiring Details:

Both the ECWS and EDLS can be connected and setup as either a 2-10 VDC (factory default), 4-20 mA, or resistance input (also a form of 4-2OmA) as indicated below. Depending on the type to be used, the Tracer TU Service Tool must be used to configure the LLID and the MP for the proper input type that is being used. This is accomplished by a setting change on the Custom Tab of the Configuration View within Tracer TU.

Important: *For proper unit operation, BOTH the EDLS and ECWS settings MUST be the same (2-10 VDC or 4-20mA), even if only one input is to be used.*

The J2-3 and J2-6 terminal is chassis grounded and terminal J2- 1 and J2-4 can be used to source 12 VDC. The ECLS uses terminals J2-2 and J2-3. ECWS uses terminals J2-5 and J2-6. Both inputs are only compatible with high-side current sources.

Figure 25. Wiring examples for EDLS and ECWS

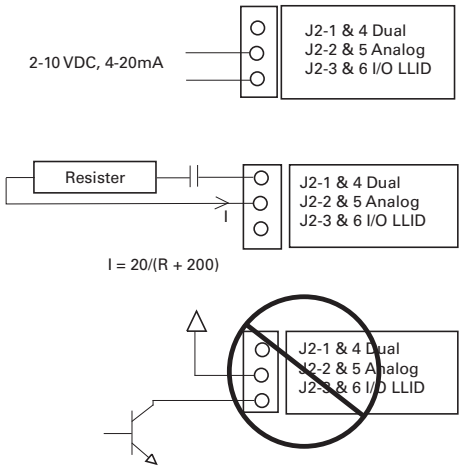

Chilled Water Reset (CWR)

UC800 resets the chilled water temperature set point based on either return water temperature, or outdoor air temperature. Return Reset is standard, Outdoor Reset is optional.

The following shall be selectable:

- One of three Reset Types: None, Return Water Temperature Reset, Outdoor Air Temperature Reset, or Constant Return Water Temperature Reset.
- Reset Ratio Set Points.

  For outdoor air temperature reset there shall be both positive and negative reset ratio's.
- Start Reset Set Points.
- Maximum Reset Set Points.

The equations for each type of reset are as follows:

Return

CWS' = CWS + RATIO (START RESET - (TWE - TWL))

and CWS' > or = CWS

and CWS' - CWS < or = Maximum Reset

Outdoor

CWS' = CWS + RATIO * (START RESET - TOD)

and CWS' > or = CWS

and CWS' - CWS < or = Maximum Reset

where

CWS' is the new chilled water set point or the "reset CWS"

CWS is the active chilled water set point before any reset has occurred, e.g. normally Front Panel, Tracer, or ECWS

RESET RATIO is a user adjustable gain

START RESET is a user adjustable reference

TOD is the outdoor temperature

TWE is entering evap. water temperature

TWL is leaving evap. water temperature

MAXIMUM RESET is a user adjustable limit providing the maximum amount of reset. For all types of reset, CWS' - CWS < or = Maximum Reset.

	Range			Increment		
Reset Type	Reset Ratio	Start Reset	Max Reset	IP Units	SI Units	Factory Default
Return	10 to 120%	4 to 30 F (2.2 to 16.7 C)	0 to 20 F (0.0 to 11.1 C)	1%	1%	50%
Outdoor	80 to -80%	50 to 130 F (10 to 54.4 C)	0 to 20 F (0.0 to 11.1 C)	1%	1%	10%

In addition to Return and Outdoor Reset, the MP provides a menu item for the operator to select a Constant Return Reset. Constant Return Reset will reset the leaving water temperature set point so as to provide a constant entering water temperature. The Constant Return Reset equation is the same as the Return Reset equation except on selection of Constant Return Reset, the MP will automatically set Ratio, Start Reset, and Maximum Reset to the following.

RATIO = 100%

START RESET = Design Delta Temp.

MAXIMUM RESET = Design Delta Temp.

The equation for Constant Return is then as follows:

CWS' = CWS + 100% (Design Delta Temp. - (TWE - TWL)) and CWS' > or = CWS

and CWS' - CWS < or = Maximum Reset

When any type of CWR is enabled, the MP will step the Active CWS toward the desired CWS' (based on the above equations and setup parameters) at a rate of 1 degree F every 5 minutes until the Active CWS equals the desired CWS'. This applies when the chiller is running.

When the chiller is not running, CWS is reset immediately (within one minute) for Return Reset and at a rate of 1 degree F every 5 minutes for Outdoor Reset. The chiller will start at the Differential to Start value above a fully reset CWS or CWS' for both Return and Outdoor Reset.

Transformer Power Rating

See table below for power rating of optional transformer (unit model number digit 28 = 1).

Table 21. Transformer power ratings

Unit Size	Power Rating
150 - 200 tons	340 kVA
225-300 tons	470 kVA

Communications Interface

LonTalk Interface (LCI-C)

UC800 provides an optional LonTalk™ Communication Interface (LCI-C) between the chiller and a Building Automation System (BAS). An LCI-C LLID shall be used to provide "gateway" functionality between a LonTalk compatible device and the Chiller. The inputs/outputs include both mandatory and optional network variables as established by the LonMark Functional Chiller Profile 8040.

Note: *For more information see ACC-SVN100*-EN.*

BACnet Interface (BCI-C)

Optional BACnet™ Communication Interface for Chillers (BCI-C) is comprised of a Tracer UC800 controller with interface software. It is a non-programmable communications module that allows units to communicate on a BACnet communications network.

Note: *For more information, see BAS-SVP01*-EN.*

Modbus Remote Terminal Unit Interface

Modicon Communication Bus (Modbus™) enables the chiller controller to communicate as a slave device on a Modbus network. Chiller setpoints, operating modes, alarms and status can be monitored and controlled by a Modbus master device.

Note: *For more information, see BAS-SVP01*-EN.*

Operating Principals

This section contains an overview of the operation and maintenance of Stealth RTAE units equipped with UC800 control systems. It describes the overall operating principles of the RTAE design.

Refrigeration Circuits

Each unit has two refrigerant circuits, with one rotary screw compressor per circuit. Each refrigerant circuit includes a compressor suction and discharge service valve, liquid line shutoff valve, removable core filter, liquid line sight glass with moisture indicator, charging port and an electronic expansion valve. Fully modulating compressors and electronic expansion valves provide variable capacity modulation over the entire operating range. Lower condensing temperatures and higher suction temperatures along with more efficient compressors and fans result in the premium efficiency level of Stealth Air Cooled chillers

Refrigeration Cycle

The refrigeration cycle of the RTAE chiller is represented in the pressure enthalpy diagram shown in Figure 26. Key state points are indicated on the figure. The cycle for the full load AHRI design point is represented in the plot.

Figure 26. Pressure enthalpy (P-h) diagram - RTAE

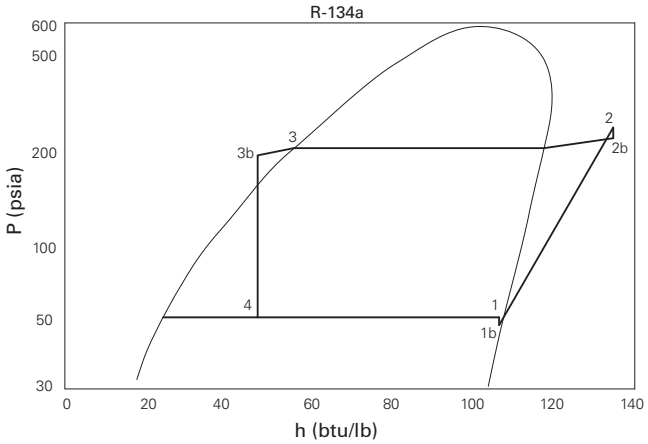

The RTAE chiller uses a shell and tube evaporator design with refrigerant evaporating on the shell side and water flowing inside tubes having enhanced surfaces (states 4 to 1). The suction lines are designed to minimize pressure drop.(states 1 to 1b). The compressor is a twin-rotor helical rotary compressor designed similarly to the compressors offered in other Trane Screw Compressor Based Chillers (states 1b to 2). The discharge lines include a highly efficient oil separation system that removes 99.8% of the oil from the refrigerant stream going to the heat exchangers (states 2 to 2b). De-superheating, condensing and sub-cooling is accomplished in a fin and tube air cooled heat exchanger where refrigerant is condensed in the tube (states 2b to 3b). Refrigerant flow through the system is balanced by an electronic expansion valve (states 3b to 4).

Refrigerant R-134a

The RTAE chiller uses environmentally friendly R-134a. Trane believes that responsible refrigerant practices are important to the environment, our customers, and the air conditioning industry. All technicians who handle refrigerants must be certified. The Federal Clean Air Act (Section 608) sets forth the requirements for handling, reclaiming, recovering and recycling of certain refrigerants and the equipment that is used in these service procedures. In addition, some states or municipalities may have additional requirements that must also be adhered to for responsible management of refrigerants. Know the applicable laws and follow them.

R-134a is a medium pressure refrigerant. It may not be used in any condition that would cause the chiller to operate in a vacuum without a purge system. RTAE is not equipped with a purge system. Therefore, the RTAE chiller may not be operated in a condition that would result in a saturated condition in the chiller of –15°F (-26°C) or lower.

R-134a requires the use of specific POE oils as designated on the unit nameplate.

Important: *Use only R-134a and Trane Oil 00311 (bulk)/ 00315 (1gal)/00317 (5gal) in Stealth chillers.*

Compressor and Lube Oil System

The rotary screw compressor is semi-hermetic, direct drive with capacity control via a variable speed drive, rolling element bearings, differential refrigerant pressure oil pump and oil heater. The motor is a suction gas cooled, hermetically sealed, permanent magnet motor. An oil separator is provided separately from the compressor. Oil filtration is provided internal to the compressor. Check valves in the compressor discharge and lube oil system are also provided.

Condenser and Fans

Air-cooled condenser coils have aluminum fins mechanically bonded to internally finned seamless aluminum tubing. The tubing is a long life alloy designed to deliver corrosion performance that meets or exceeds microchannel coils. The condenser coil has an integral subcooling circuit. Condensers are factory proof tested at 525 psig and leak tested with helium in a mass spectrometer chamber at 150 psig. All tube connections are mechanical except the brazed copper to aluminum inlet and outlet connections. Condenser fans are direct-drive vertical discharge. The condenser fan motors are permanent magnet motors with an integrated drive to

provide variable speed fan control for all fans and are designed with permanently lubricated ball bearings, internal temperature and current overload protection, and fault feedback as a standard product offering. The fan impeller is a nine bladed-shrouded fan made from heavy-duty molded plastic. Standard units will start and operate between 32 to 105°F (0 to 40°C) ambient.

The UC800 controls calculate optimum fan speed for maximum efficiency based on compressor load and outdoor air, resulting in high IPLV values.

Evaporator

The evaporator is a tube-in-shell heat exchanger design constructed from carbon steel shells and tubesheets with internally and externally finned seamless copper tubes mechanically expanded into the tube sheets. The evaporator is designed, tested and stamped in accordance with the ASME Boiler and Pressure Vessel Code for a refrigerant side working pressure of 200 psig. The evaporator is designed for a water side working pressure of 150 psig. Standard water connections are grooved for Victaulic style pipe couplings, with flange style connections optionally available. Waterboxes are available in 2 and 3 pass configurations and include a vent, a drain and fittings for temperature control sensors. Evaporators are insulated with 3/4 inch closed cell insulation. Evaporator water heaters with thermostat are provided to help protect the evaporator from freezing at ambient temperatures down to -20°F (-29°C). A factory installed flow switch is installed on the supply water box in the evaporator inlet connection.

Drive Cooling System

Each refrigeration circuit has a compressor drive cooling circuit. Each drive cooling circuit includes a wet rotor circulation pump that circulates a secondary heat transfer fluid in a closed system between the adaptive frequency drive components between the heat sinks of the adaptive frequency drive and a brazed plate heat exchanger. The pump is fed from a thermal expansion tank with a vented-pressure cap which is also used as the circuit pressure relief. The circuit also includes a particulate strainer and a drain valve for servicing.

Controls

Overview

Stealth™ RTAE units utilize the following control/interface components:

- Tracer™ UC800 Controller
- Tracer AdaptiView™ TD7 Operator Interface

UC800 Specifications

This section covers information pertaining to the UC800 controller hardware.

Wiring and Port Descriptions

Figure 27 illustrates the UC800 controller ports, LEDs, rotary switches, and wiring terminals. The numbered list following Figure 27 corresponds to the numbered callouts in the illustration.

Figure 27. Wiring locations and connection ports

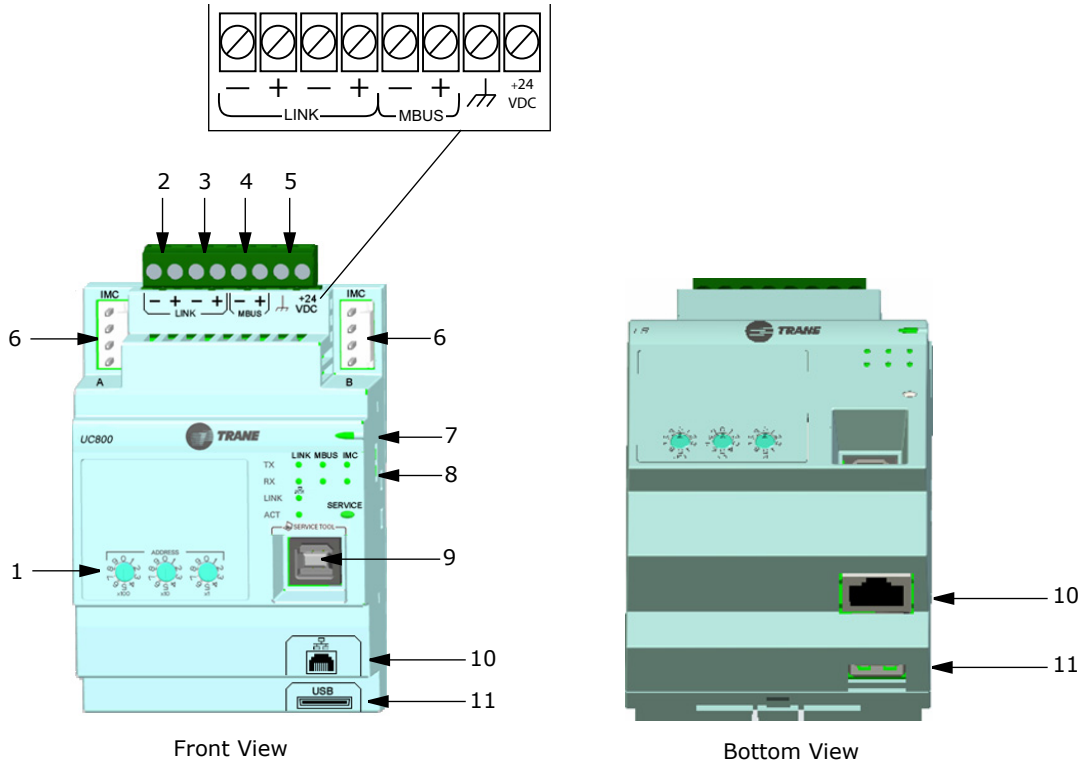

1. Rotary Switches for setting BACnet® MAC address or MODBUS ID.
2. LINK for BACnet MS/TP, or MODBUS Slave (two terminals, ±). Field wired if used.
3. LINK for BACnet MS/TP, or MODBUS Slave (two terminals, ±). Field wired if used.
4. Machine bus for existing machine LLIDs (IPC3 Tracer bus 19.200 baud). *IPC3 Bus: used for Comm4 using TCI or LonTalk® using LCI-C.*
5. Power (210 mA at 24 Vdc) and ground terminations (same bus as item 4). Factory wired.
6. Not used.
7. Marquee LED power and UC800 Status indicator (Table 22, p. 43).
8. Status LEDs for the BAS link, MBus link, and IMC link.
9. USB device type B connection for the service tool (Tracer TU).
10. The Ethernet connection can *only* be used with the Tracer AdaptiView display.
11. USB Host (not used).

Communication Interfaces

There are four connections on the UC800 that support the communication interfaces listed. See Figure 27, p. 42 for the locations of each of these ports.

- BACnet® MS/TP
- MODBUS™ Slave
- LonTalk™ using LCI-C (from the IPC3 bus)
- Comm 4 using TCI (from the IPC3 bus)

Rotary Switches

There are three rotary switches on the front of the UC800 controller. Use these switches to define a three-digit address when the UC800 is installed in a BACnet or MODBUS system (e.g., 107, 127, etc.).

Note: *Valid addresses are 001 to 127 for BACnet and 001 to 247 for MODBUS.*

LED Description and Operation

There are 10 LEDs on the front of the UC800. Figure 28 shows the locations of each LED and Table 22 describes their behavior in specific instances.

Figure 28. LED locations

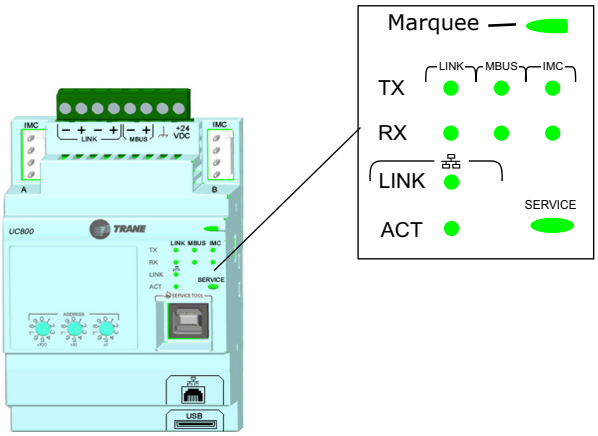

Table 22. LED behavior

LED	UC800 Status
Marquee LED	**Powered.** If the Marquee LED is green solid, the UC800 is powered and no problems exist.
	Low power or malfunction. If the Marquee LED is red solid, the UC800 is powered, but there are problems present.
	Alarm. The Marquee LED blinks Red when an alarm exists.
LINK, MBUS, IMC	The **TX** LED blinks green at the data transfer rate when the UC800 transfers data to other devices on the link. The **Rx** LED blinks yellow at the data transfer rate when the UC800 receives data from other devices on the link.
Ethernet Link	The **LINK** LED is solid green if the Ethernet link is connected and communicating. The **ACT** LED blinks yellow at the data transfer rate when data flow is active on the link.
Service	The Service LED is solid green when pressed. For qualified service technicians only. Do not use.

NOTICE:

Electrical Noise!

Maintain at least 6 inches between low-voltage (<30V) and high voltage circuits. Failure to do so could result i electrical noise that could distort the signals carried by the low-voltage wiring, including IPC.

Tracer AdaptiView TD7 Display

Operator Interface

Information is tailored to operators, service technicians, and owners. When operating a chiller, there is specific information you need on a day-to-day basis—setpoints, limits, diagnostic information, and reports. Day-to-day operational information is presented at the display. Logically organized groups of information— chiller modes of operation, active diagnostics, settings and reports put information conveniently at your fingertips.

Figure 29. TD7 screens

Operator Display Boot Screen | Display Loading Data | Home Screen, Auto Mode

Main Display Area/Home Screen

All screens appear within the main display area (shown as location in Table 30).

Home screen: Chiller status information

The home screen (Table 30) provides the most frequently needed chiller status information on “touch targets” (the entire white rectangular areas) for each chiller component. Touching any touch target displays a screen containing more chiller status information related to each component.

Figure 30. Main screen

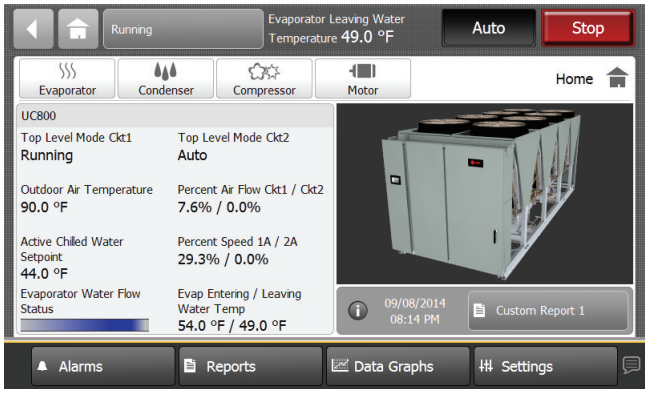

Table 23. Main screen items

Description	Resolution	Units
Active Chilled Water Setpoint	X.X	°F /°C
Active Current Limit Setpoint	X.X	%RLA
Average Motor Current %RLA	X.X	%RLA
Evap Entering/Leaving Water Temp	X.X	°F /°C
Cond Entering/Leaving Water Temp	X.X	°F /°C
Frequency Command	X.X	Hz
Evaporator Water Flow Status	X.X	
Condenser Water Flow Status		

Viewing Chiller Operating Modes

On the Reports screen, touch Chiller Operating Modes to view the current operating status of the chiller in terms of the top-level operating mode and submodes.

Note: *You can also access the Chiller Operating Modes screen from the chiller status button in the upper left corner of the screen.*

Figure 31. Chiller operating modes

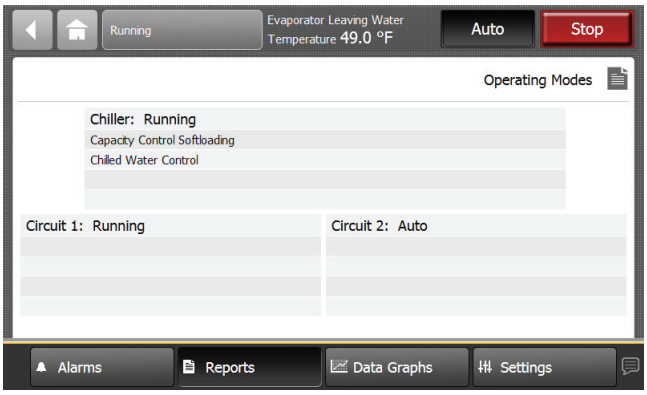

Table 24. Operating modes

Chiller Modes	Description
MP Resetting	
Stopped	**The chiller is not running and cannot run without intervention. Further information is provided by the sub-mode:**
Local Stop	Chiller is stopped by TD7 Stop button command– cannot be remotely overridden.
Immediate Stop	Chiller is stopped by the TD7 Panic Stop (by pressing Stop button twice in succession) – previous shutdown was manually commanded to shutdown immediately without a run-unload or pumpdown cycle - cannot be remotely overridden.
Diagnostic Shutdown – Manual Reset	The chiller is stopped by a diagnostic that requires manual intervention to reset.
Run Inhibit	**The chiller is currently being inhibited from starting (and running*), but may be allowed to start if the inhibiting or diagnostic condition is cleared. Further information is provided by the sub-mode:**
Diagnostic Shutdown – Auto Reset	The entire chiller is stopped by a diagnostic that may automatically clear.

Table 24. Operating modes (continued)

Chiller Modes	Description
Starting is Inhibited by External Source	The chiller is inhibited from starting (and running) by the "external stop" hardwired input.
Start Inhibited by BAS	The chiller is inhibited from starting (and running) by command from a Building Automation System via the digital communication link (com 4 or com 5).
Waiting for BAS Communications	This is a transient mode - 15-min. max, and is only possible if the chiller is in the Auto - Remote command mode. After a power up reset, it is necessary to wait for valid communication from a Building Automation System (Tracer) to know whether to run or stay inhibited. Either valid communication will be received from the Building Automation System (e.g. Tracer), or a communication diagnostic ultimately will result. In the latter case the chiller will revert to Local control.
Power Up Delay Inhibit min:sec	The compressor is currently being inhibited from starting as part of the power up start delay (or staggered start) feature. This feature is intended to prevent multiple chillers from all starting simultaneously if power is restored to all chillers simultaneously.
Low Differential Refrigerant Pressure Cool-Down Timemin:sec	Contact your local Trane service office.
Auto	**The chiller is not currently running but can be expected to start at any moment given that the proper conditions and interlocks are satisfied. Further information is provided by the sub-mode:**
Waiting For Evap Water Flow	The chiller will wait up to 20 minutes in this mode for evaporator water flow to be established per the flow switch hardwired input.
Waiting for A Need to Cool	The chiller will wait indefinitely in this mode, for an evaporator leaving water temperature higher than the Chilled Water Setpoint plus the Differential to Start.
Waiting to Start	**The chiller is not currently running and there is a call for cooling but start is delayed by certain interlocks or proofs. Further information is provided by the sub-mode:**
Waiting For Cond Water Flow	The chiller will wait up to 20 minutes in this mode for condenser water flow to be established per the flow switch hardwired input.
Start Inhibited Waiting for Oil	The chiller will wait up to 2 minutes in this mode for oil level to appear in the oil tank.
Condenser Water Pump Pre-Run Timemin:sec	The chiller will wait up to 30 minutes (user adjustable) in this mode for to allow the condenser water loop to equalize in temperature
Restart Inhibit min:sec	The compressor is currently unable to start due to its restart inhibit timer. A given compressor is not allowed to start until 5 minutes (adj) has expired since its last start, once a number of "free starts" have been used up.
Waiting For EXV Preposition	The Chiller will wait for the time it takes the EXV to get to its commanded pre-position prior to starting the compressor. This is typically a relatively short delay and no countdown timer is necessary (less than 15 seconds)
Minimum Condenser Watermin:sec	Only possible when Condenser Head Pressure Control option is enabled, this wait may be necessary due to the Head Pressure control device's stroke time.
Condenser Water Regulating Control min:sec	Only possible when Condenser Head Pressure Control option is enabled, this wait may be necessary due to the Head Pressure control device's stroke time
Running	**The chiller, circuit, and compressor are currently running. Further information is provided by the sub-mode:**
High Discharge Temp Limit	The compressor is running and is being forced loaded to its step load point, without regard to the leaving water temperature control, to prevent tripping on high compressor discharge temperature.
Base Loaded	Chiller is running in "Base Load" operation where the capacity of the chiller is controlled to maintain a given current per an adjustable set point. The chiller is forced to run without regard to the chilled water temperatures and the differential to start and stop
Capacity Control Softloading	The chiller is running, but loading is influenced by a gradual 'pulldown" filter on the chilled water temperature setpoint. The settling time of this filter is user adjustable as part of the softload control feature.
Current Control Softloading	The chiller is running, but loading is influenced by a gradual filter on the current limit setpoint The starting current and the settling time of this filter is user adjustable as part of the softload control feature.
EXV Controlling Differential Pressure	Liquid level control of the Electronic Expansion Valve has temporarily been suspended. The EXV is being modulated to control for a minimum differential pressure. This control implies low liquid levels and higher approach temperatures, but is necessary to provide minimum oil flow for the compressor until the condenser water loop can warm up to approx 50F.
Chilled Water Control	Unit is running in the Cooling Mode of operation and is attempting to control to the active Chilled Water Setpoint.
Running – Limited	**The chiller, circuit, and compressor are currently running, but the operation of the chiller/ compressor is being actively limited by the controls. Further information is provided by the sub-mode.* See the section below regarding criteria for annunciation of limit modes**

Table 24. Operating modes (continued)

Chiller Modes	Description
Condenser Pressure Limit	The circuit is experiencing condenser pressures at or near the condenser limit setting. Compressors on the circuit will be unloaded to prevent exceeding the limits.*
Low Evaporator Refrigerant Temperature Inhibit	The circuit is experiencing saturated evaporator temperatures at or near the Low Refrigerant Temperature Cutout setting. Compressors on the circuit will be unloaded to prevent tripping. *
Capacity Limited by Low Liquid Level	The circuit is experiencing low refrigerant liquid levels and the EXV is at or near full open. The compressors on the circuit will be unloaded to prevent tripping.*
Current Limit	The compressor is running and its capacity is being limited by high currents. The current limit setting is 100% RLA (to avoid overcurrent trips) or lower as set by the compressor's "share" of the active current limit (demand limit) setting for the entire chiller.*
Phase Unbalance Limit	The compressor is running and its capacity is being limited by excessive phase current unbalance.*
Low Discharge Superheat Limit	This is limit control that acts to prevent chiller shutdown when the discharge superheat approaches the limit setpoint by reducing the liquid level and unloading the slide valve.
Oil Loss Avoidance	This is limit control that acts to prevent chiller shutdown when the estimated refrigerant flow approaches the calculated minimum flow by increasing the slide valve capacity and/or VFD frequency
Note: Other normal running modes (see above) may also appear under this top level mode	
Shutting Down	**The chiller is still running but shutdown is imminent. The chiller is going through a compressor run-unload. sequence. Shutdown is necessary due to one (or more) of the following sub-modes:**
Local Stop	Chiller is in the process of being stopped by TD7 Stop button command
immediate Stop	Chiller is in the process of being stopped by TD7 Panic Stop command
Diagnostic Shutdown – Manual Reset	Chiller is in the process of being stopped by a Latching Diagnostic shutdown – Manual Reset is required to clear
Diagnostic Shutdown – Auto Reset	Chiller is in the process of being stopped by a Diagnostic shutdown – Automatic clearing of the diagnostic is possible if condition clears.
Compressor Unloading (min:sec)	The compressor is in its "run – unload" state in which it is being continuously unloaded for 40 sec prior to shutdown.
Starting is Inhibited by External Source	Chiller is in the process of being stopped by the External Stop hardwired input
Start Inhibited by BAS	The Chiller is in the process of shutdown due to a command from the Building Automation System (e.g. Tracer)
Evaporator Water Pump Off Delay min:sec	
Service Override	**The Chiller is in a Service Override mode**
Service Pumpdown	The chiller, circuit, and compressor is running via a manual command to perform a Service Pumpdown. Both evap and condenser water pumps are commanded to be running. The EXV is being held wide open, but the manual liquid line service valve should be closed.

Alarms

You can use the display to view alarms and to reset them. Alarms are communicated to the display immediately upon detection.

Viewing the Alarms Screen

Touch the Alarms button in the main menu area (Figure 30, p. 44) to view the Alarms screen. A table of active alarms appears that is organized chronologically with the most recent at the top of the list, as shown in Figure 32. This example shows the default view, which appears each time you return to the screen.

Note: *A page number appears in the lower right corner of the screen. If a screen contains more than one page, up/down arrows also appear for viewing the other pages*

Figure 32. Alarm screen

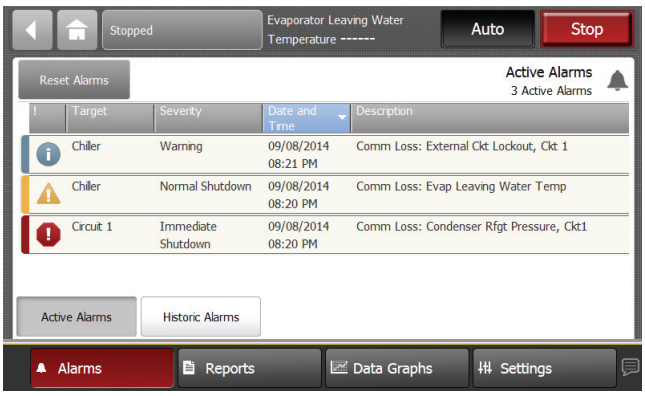

The Alarms screen is accessible by depressing the Alarms enunciator. A verbal description will be provided.

A scrollable list of the last active Alarms is presented. Performing a "Reset Alarms" will reset all active Alarms

regardless of type, machine or circuit. The scrollable list will be sorted by time of occurrence.

If a informational warning is present, the “Alarms” key will be present but not flashing. If a Alarm shutdown (normal or immediate) has occurred, the “Alarm” key will display that is flashing. If no Alarms exist, the “Alarm” key will not be present.

Reports

You can use the Tracer display to view a variety of reports and to create and edit a custom report. All reports contain live data that refreshes every 2–5 seconds.

Viewing the Reports Screen

Touch the Reports button in the main menu area (Figure 4) to view the Reports screen. The Reports screen contains the following buttons:

- Custom Report1
- Custom Report2
- Custom Report3
- Evaporator
- Condenser
- Compressor
- Motor
- About
- Operating Modes
- Log Sheet
- ASHRAE Chiller Log

Each button links to the report named on the button.

Figure 33. Report screen

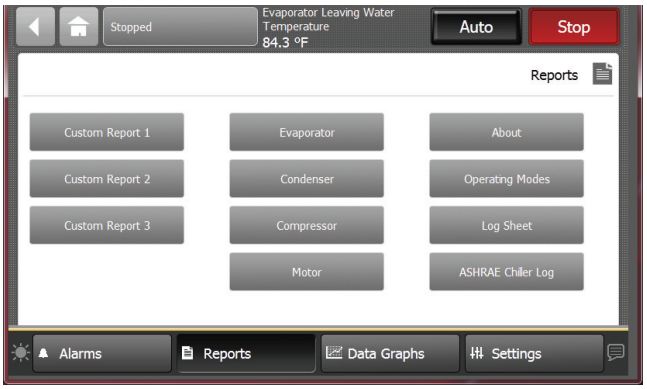

The Reports tab allows a user to select from a list of reports headings. Each report will generate a list of status items as defined in the tables that follow.

Editing a Custom Report

You can edit the custom report by adding, removing, or re-order data as follows:

1. On the Custom Report screen, touch Edit. The Edit Custom Report screen appears.
2. Add, remove, or re-order as follows:
   a. To add an item to the custom report, touch it. It responds by changing to blue. You can use the arrows to scroll through the rest of the items that can be added to the custom report. Then touch Add to move the selected item to the box on the right side of the screen. To add all of the remaining items in the left box to the custom report, touch Add All.
   b. To remove an item from the custom report, touch it. It responds by changing to blue. You can use the arrows to scroll through the rest of the items that can be removed from the custom report. Then touch Remove to move the selected item to the box on the left side of the screen.
   c. To re-order items in the custom report, touch it. It responds by changing to blue. Use the arrows to change the order of a highlighted item.
3. To save and view your edited custom report, touch Save.

Figure 34. Edit custom report screen

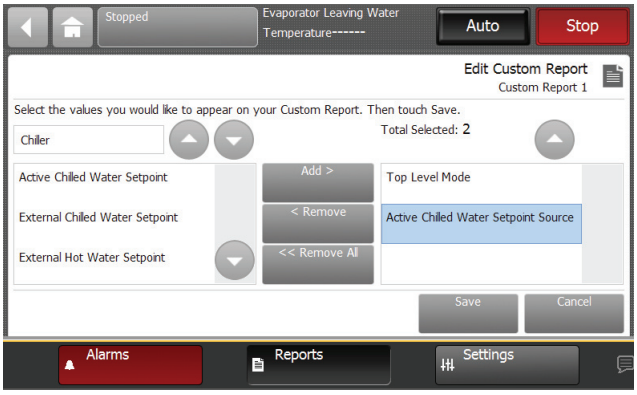

Figure 35. Report evaporator screen

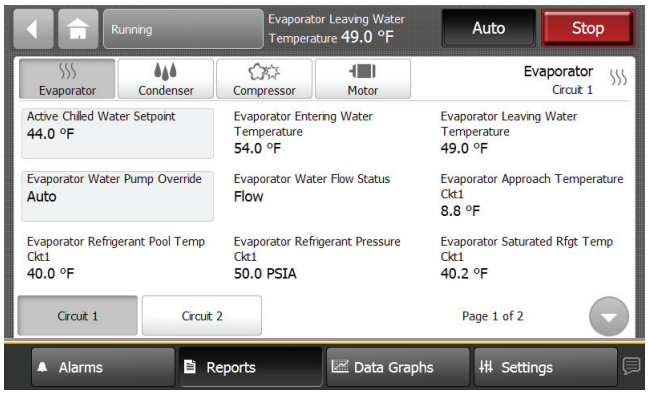

Table 25. Report evaporator screen items

Description	Resolution	Units
Active Chilled Water Setpoint	X.X	°F / °C
Evaporator Entering Water Temperature	X.X	°F / °C
Evaporator Leaving Water Temperature	X.X	°F / °C
Evaporator Water Flow Status	Flow, No Flow	Text
Evaporator Water Pump Override	Auto, On	Text
Evaporator Approach Temperature	X.X	°F / °C
EXV Position Percent	X.X	%
Evaporator Refrigerant Pressure	XXX.X	PSIA/kPa
Evaporator Saturated Rfgt Temp	X.X	°F / °C
Evaporator Refrigerant Liquid Level	X.XX	in/mm

Figure 36. Report condenser screen

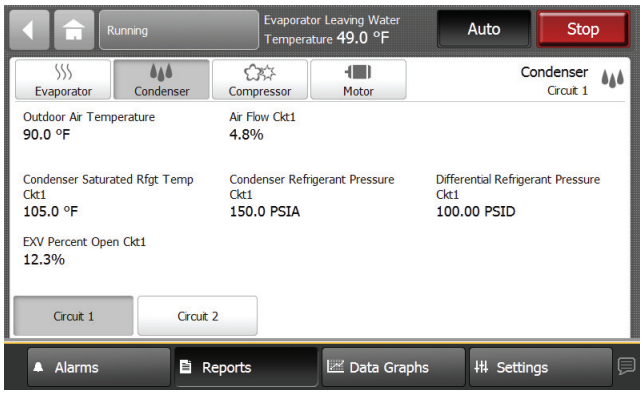

Table 26. Report condenser screen items

Description	Resolution	Units
Condenser Entering Water Temperature	X.X	F / C
Condenser Leaving Water Temperature	X.X	F / C
Condenser Water Flow Status	Flow, No Flow	Text
Condenser Water Pump Override	Auto, On	Text
Condenser Approach Temperature	X.X	F / C
EXV Position Percent	X.X	%
Condenser Refrigerant Pressure	XXX.X	PSIA/kPa
Condenser Saturated Rfgt Temp	X.X	F / C
Differential Refrigerant Pressure	XXX.X	PSIA/kPa
Outdoor Air Temperature	X.X	F / C

Figure 37. Report compressor screen

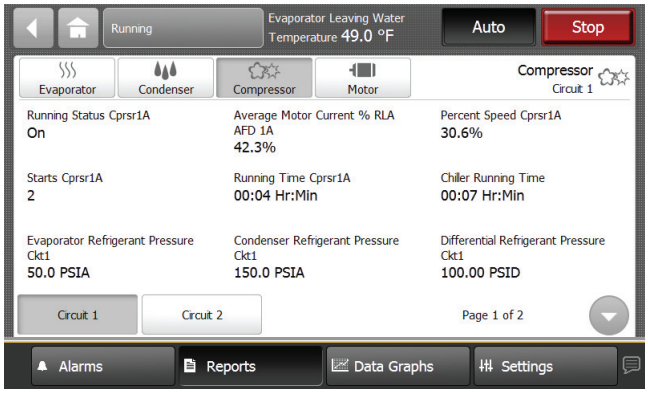

Table 27. Report compressor screen items

Description	Resolution	Units
Compressor Running Status	On,Off	Text
Average Motor Current %RLA	XX.X%	%RLA
Compressor Starts	XX	Text
Compressor Running Time	XX:XX	Hr:Min
Oil Loss Level Sensor	Wet, Dry	Text
Discharge Temperature	X.X	°F / °C
Discharge Temperature	X.X	°F / °C
Compressor Oil Pressure	XXX.X	PSIA/kPaA
Evaporator Refrigerant Pressure	XXX.X	PSIA/kPaA
Condenser Refrigerant Pressure	XXX.X	PSIA/kPaA
Differential Refrigerant Pressure	XXX.X	PSIA/kPaA
Frequency Command	XX.X	Hz

Figure 38. Report motor screen

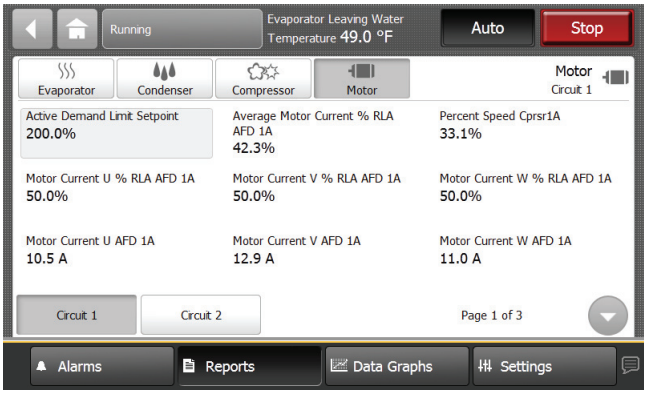

Table 28. Report motor screen items

Description	Resolution	Units
Active Current Limit Setpoint	X.X	%RLA
Average Motor Current %RLA	X.X	%RLA
Starter Motor Current L1 %RLA	X.X	%RLA
Starter Motor Current L2 %RLA	X.X	%RLA
Starter Motor Current L3 %RLA	X.X	%RLA
Starter Motor Current L1	X.X	A
Starter Motor Current L1	X.X	A
Starter Motor Current L1	X.X	A
Starter Input Voltage AB	XXX.X	V
Starter Input Voltage BC	XXX.X	V
Starter Input Voltage CA	XXX.X	V
Average Motor Current	X.X	A
Average Phase Voltage	XXX.X	V
Frequency Command	XX.X	Hz

Equipment Settings

You can use the TD7 display to monitor and change a variety of equipment settings.

Viewing the Settings Screen

Touch the Settings button in the main menu area (see Figure 30, p. 44) to view the Settings screen. Equipment Settings identifies a column of buttons located on the screen (see the outlined column in Figure 39). The buttons are:

- Chiller Settings
- Feature Settings
- Chiller Water Reset
- Manual Control Settings

Each of these buttons provide access to a screen that contains additional buttons related to each topic. This section provides detailed information about these screens.

Figure 39. Setting screen

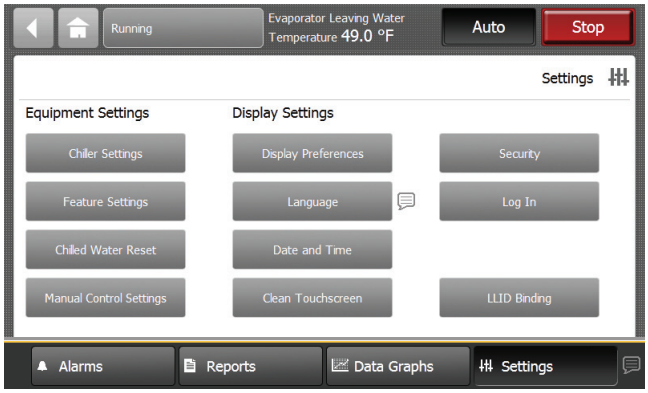

Viewing and Changing Equipment Settings

Each button in the Equipment Settings column on the Settings screen takes you to a menu screen that contains a group of buttons. Each button displays the name of a setting and its current value (Figure 40). Touch any button to view a screen where you can change the setting for the feature shown on the button.

Note: *A page number appears in the lower right corner of the screen. If a screen contains more than one page, up/down arrows also appear for viewing the other pages, as in Figure 40.*

Figure 40. Equipment setting screen (Chiller setting shown)

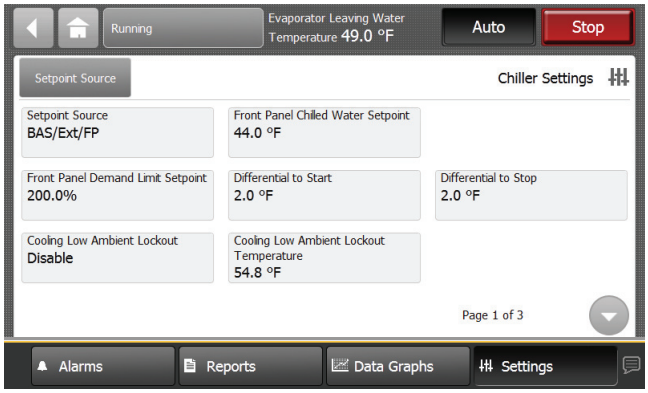

To change an equipment setting, follow this procedure:

1. Touch one of the button in the Equipment Settings column on the Settings screen, such as Chiller Settings. The corresponding screen appears (in this case, the Chiller Settings screen).
2. Touch the button that shows the equipment setting you want to change. A screen that allows you to change the equipment setting appears. There are two types of these screens:
   a. For screens with button selections (Figure 41), touch the button that represents the setting you want. The button becomes shaded, and a Save button appears at the bottom of the screen.
   b. For screens with numerical keypads (Figure 42), touch the appropriate numbers to change the current value. The new value appears above the keypad.
3. Touch Save to complete the change. The current value is updated in the upper left side of the screen, demonstrating that the change has been communicated to the Tracer UC800 controller. The screen you were previously viewing appears.

Figure 41. Chilled water setpoint screen

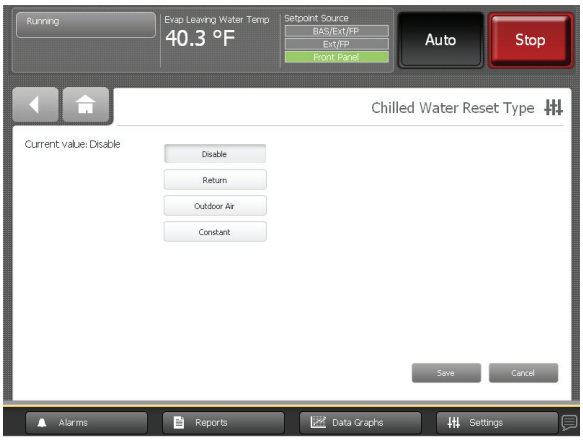

Figure 42. Changed chilled water setpoint screen

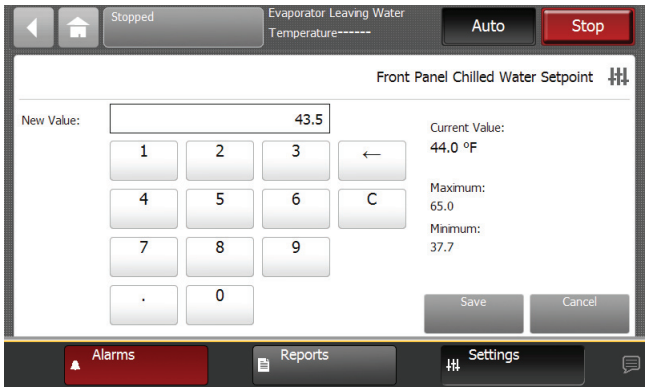

Keypad features:

- When you enter a new number, the value in the New value field is deleted and replaced with the new entry.
- The backspace (arrow) key deletes the characters you previously entered.
- If the keypad is used to enter a setpoint that is out of range, an error dialog will appear when you touch the Save button.
- Keypads that allow negative numbers have positive and negative number (+/-) keys.

Table 29. Settings screen items

Description	Resolution	Units
Chiller Settings		
Active Chilled Water Setpoint	± XXX.X	°F / °C
Active Current Limit Setpoint	XXX %	%RLA
Active Panel Base Load Cmd	On/Auto	Text
Active Base Loading Setpoint	XXX	%
Active Base Loading Command	On/Auto	Text
Differential to Start	XXX.X	°F / °C
Differential to Stop	XXX.X	°F / °C
Setpoint Source (BAS/Ext/FP, Ext/Front Panel, Front Panel)	BAS/Ext/FP	Text
Evaporator Water Pump Off Delay	XX	Min
Condenser Pump Prestart Time	XX	Min
High Evap Water Temp Cutout	XXX.X	°F / °C
Evaporator Leaving Water Temp Cutout	XX.X	°F / °C
Low Refrigerant Temperature Cutout	XX.X	°F / °C
Current Limit Softload Start Point	XXX.X	%
Current Limit Control Softload Time	XXXX	Sec
Capacity Control Softload Time	XXXX	Sec
Local Atmospheric Pressure	XXX.X	psi/kPa
Power Up Start Delay	XXX	Min
Feature Settings		
External Chilled/Hot Water Setpoint (Enable/Disable)		Text
External Current Limit Setpoint (Enable/Disable)		Text
LCI-C Diagnostic Encoding (Enable/Disable)		Text
Chilled Water Reset (Constant, Outdoor, Return, Disable),	Disable	Text
Return Reset Ratio	XXX	%
Return Start Reset	XXX.X	°F / °C
Return Maximum Reset	XXX.X	°F / °C
Outdoor Reset Ratio	XXX	%
Outdoor Start Reset	XXX.X	°F / °C
Outdoor Maximum Reset	XXX.X	°F / °C
Mode Overrides		
Evap Water Pump (Auto, On)	Auto	Text
Cond Water Pump (Auto, On)	Auto	Text
Display Reference		
Date Format (mmm dd, yyyy, dd-mmm-yyyy)	mmm dd, yyyy	Text
Data Separator		Text
Time Format (12-hour, 24-hour)	12-hour	Text
Unit System (SI, English)	English	Text
Pressure Units (Absolute, Gauge)	Absolute	Text
Number Format		Text

Display Settings

You can use the Tracer AdaptiView display to change the format of the information that appears on the display, and to clean the touch screen.

Viewing the Settings Screen

Touch the Settings button in the main menu area (Figure 39, p. 49) to view the Settings screen. Display Settings identifies a column of buttons located on the screen (see Figure 43). The buttons are:

- Display Preferences
- Language
- Date and Time
- Clean Display

Each button provide access to a screen that is related to the button name.

Viewing and Changing Display Preferences

On the Settings screen, touch Display Preferences to view a screen containing these buttons (see Figure 43):

- Date Format
- Date Separator
- Time Format
- Unit System
- Pressure Units
- Number Format

Figure 43. Display reference screen

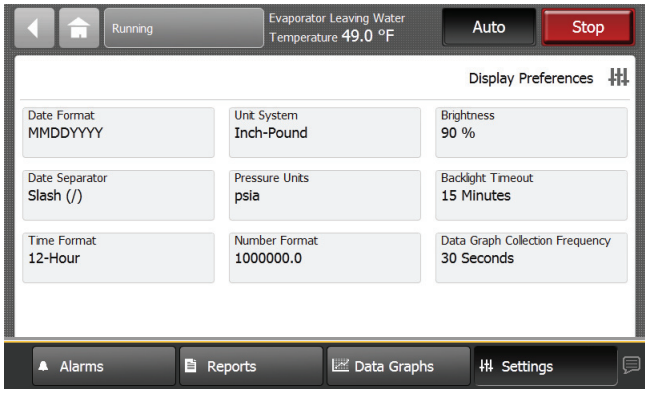

Each of the buttons shows the name of a display preference and its format (current value). Touch any of these buttons to view a screen where you can change the format. The button representing the format currently used is shaded (see the "MMDDYYYY" button).

Figure 44. Date format page

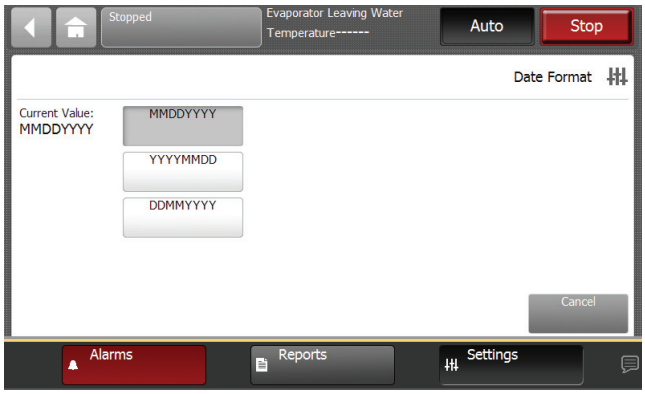

To change the format:

1. Touch the button that shows that format you prefer.
2. Touch Save to confirm your selection and to return to the Display Preferences screen.

Date Format . Use the Date Format screen to choose from the following date formats:

- MMDDYYYY (default)
- YYYYMMDD
- DDMMYYYY

Date Separator . Use the Date Separator screen to choose from the following date formats:

- None
- Slash (default)
- Hyphen

Time Format . Use the Time Format screen to choose from the following time formats:

- 12 hour (default)
- 24 hour

Units System . Use the Display Units screen to choose from the following display units:

- SI
- Inch-Pounds (default)

Pressure Units . Use the Pressure Units screen to choose from the following pressure units:

- kPaA (default if "SI" is chosen for display units)
- kPaG
- PSIA (default if "Inch-Pound" is chosen for display units)
- PSIG

Number Format .

- 1000000.0
- 1000000,0

Figure 45. Language page

The language that is currently in use on the display is expressed as the current value on the Language screen. The button that displays the current value is shaded (see the "English" buttoninFigure19as an example).

To change the language:

1. Touch the button that identifies the language you prefer.
2. Touch Save to confirm your selection and to return to the Settings screen.

Figure 46. Date and time screen

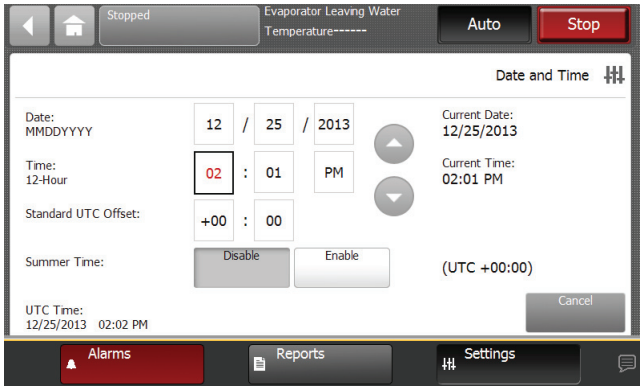

The current date and time for the display is expressed as the current value. The current value appears below the center line on the screen.

Above the center line, the following date and time attributes appear:

- Month
- Day
- Year
- Hour
- Minute
- AM/PM

To change the date or time:

1. Touch the square presenting the attribute you want to change. The square becomes highlighted.
2. Touch the up or down arrow key on the screen until the your desired selection appears. Repeat the process for any other attributes you want to change.
3. Touch Save to confirm your selection and return to the Settings screen.

Cleaning the Display

On the Settings screen, touch Clean Display to disable the Tracer AdaptiView display screen for 15 seconds so that you can clean the screen without it responding to touch. During this time, the screen is black with a number in the center that counts down the seconds. After 15 seconds, the Settings screen re-appears.

Figure 47. Countdown screen

Security Settings

If security if enabled, the Tracer AdaptiView display requires that you log in with a four-digit security PIN to make setting changes that are protected by security. This feature prevents unauthorized personnel from doing so. There are two levels of security, each allowing specific changes to be made.

You can view all data without logging in. The log-in screen appears only when you try to change a setting that is protected by security, or when you touch the Log in button from the Settings screen.

Disabling/Enabling Security

The Tracer AdaptiView display gives you the ability to disable or enable the security feature that allows a user to log in and log out.

To disable security, you must be logged in:

1. From the Settings screen, touch the Security button. The Security screen appears (Figure 48).

Note: *If you are logged out, the Log in screen appears.*

2. Touch the Disable button. The button becomes shaded.

3. Touch Save. The Settings screen appears with only the Security button visible. The Log in/Logout button is gone.

To enable security:

1. From the Settings screen, touch the Security button. The Security screen appears (Figure 48).
2. Touch the Enable button. The button becomes shaded.
3. Touch Save. The Settings screen appears with a Log out button, in addition to the Security button.

Figure 48. Security screen - disable

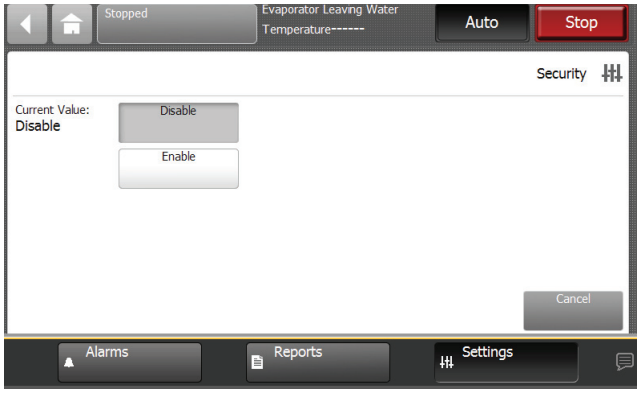

Figure 49. Security settings screen

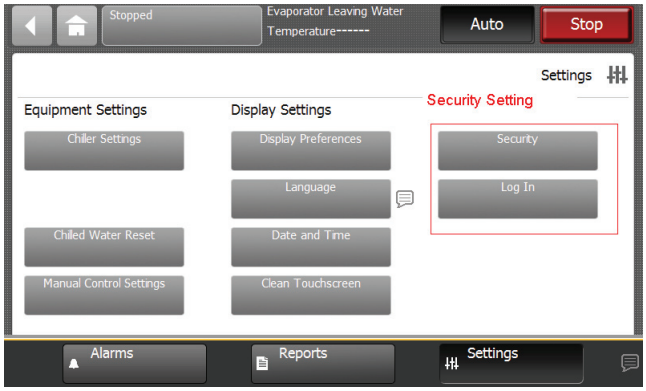

Logging In

There are two levels of security:

- Security Level 1 allows users to change a limited group of secure settings. The default security PIN is 1111.
- Security Level 2 allows users to change all secure settings. The default security PIN is 7123.

A technician must use the Tracer TU service tool to define a different PIN, or to recall a PIN that has been forgotten. When defining a PIN in Tracer TU, the technician enters a 4-digit PIN that corresponds with the desired level of security.

To log in:

1. Touch the Log in button. The Log in screen appears (Figure 49).
2. Use the keypad to enter your PIN.
   a. The PIN is a four-digit number, which was configured for your system with the Tracer TU service tool.
   b. As you enter the number, the PIN remains hidden by asterisks.

Note: *If you enter an invalid PIN, an error message appears on the Log in screen.*

3. Touch Save.
   a. If you viewed the Log in screen from touching Log in on the Settings screen, the Settings screen appears with a Log out button on it.
   b. If the Log in screen appeared when you tried to change a setting, you return to that setting screen.

Note: *The PIN is valid until 30 minutes of inactivity passes, or until you log out.*

Figure 50. Log in screen

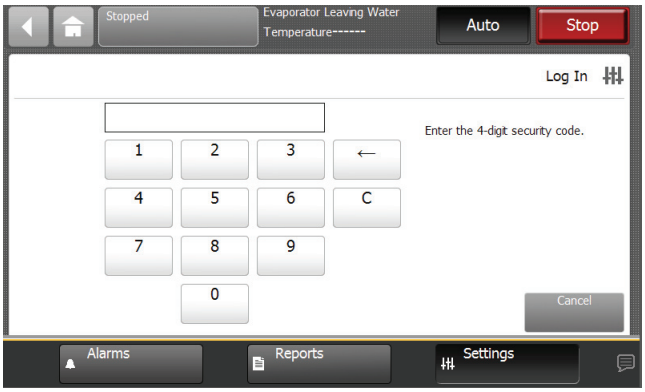

Logging Out

To log out:

1. Touch the Log out button. A confirmation screen appears (Figure 51).
2. Touch Yes to confirm that you want to log out. The Settings screen appears with a Log in button on it.

Figure 51. Log out confirmation screen

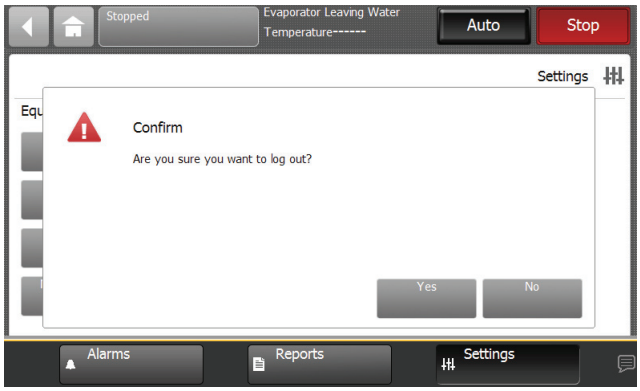

InvisiSound Ultimate - Noise Reduction Mode

When the InvisiSound Ultimate option is selected (model number digit 12=3), noise reduction mode can be enabled to adjust fan speed and lower maximum sound levels. Reduced acoustic noise levels can be set for certain times, or on a schedule. The noise reduction feature can be requested by local time of day scheduling, external input or building automation system.

To enable this function at the external display:

- Access the Settings screen on the Tracer AdaptiView. See Figure 52.

Figure 52. Noise reduction mode settings

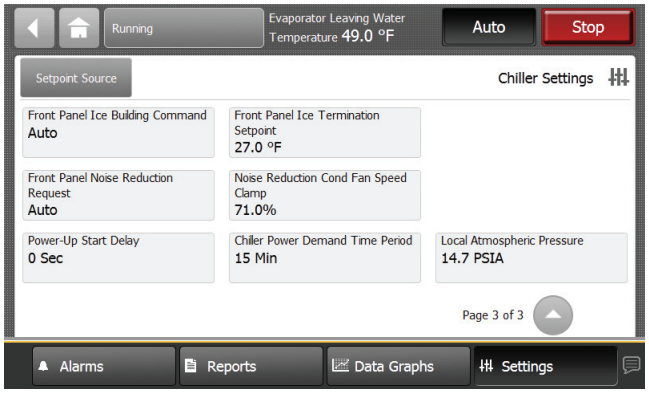

- Set the Front Panel Noise Reduction Request to ON.
- Adjust the Noise Reduction Condenser Fan Speed Clamp to desired value.
  - Setting for fan speed is as a percentage of 920 rpm maximum fan speed
    Example:
    For fan speed of 700 rpm, enter a value of 76%
  - Acceptable inputs are 60% (552 rpm) to 100% (920 rpm) in 1% increments

Tracer™ TU

The AdaptiView™ TD7 operator interface allows for daily operational tasks and setpoint changes. However, to adequately service Stealth chillers Tracer™ TU service tool is required. (Non-Trane personnel, contact your local Trane office for software purchase information.) Tracer TU adds a level of sophistication that improves service technician effectiveness and minimizes chiller downtime. This portable PC-based service-tool software supports service and maintenance tasks, and is required for software upgrades, configuration changes and major service tasks.

Tracer TU serves as a common interface to all Trane® chillers, and will customize itself based on the properties of the chiller with which it is communicating. Thus, the service technician learns only one service interface.

The panel bus is easy to troubleshoot using LED sensor verification. Only the defective device is replaced. Tracer TU can communicate with individual devices or groups of devices.

All chiller status, machine configuration settings, customizable limits, and up to 100 active or historic diagnostics are displayed through the service-tool software interface.

LEDs and their respective Tracer TU indicators visually confirm the availability of each connected sensor, relay, and actuator.

Tracer TU is designed to run on a customer's laptop, connected to the Tracer AdaptiView control panel with a USB cable. Your laptop must meet the following hardware and software requirements:

- 1 GB RAM (minimum)
- 1024 x 768 screen resolution
- CD-ROM drive
- Ethernet 10/100 LAN card
- An available USB 2.0 port
- Microsoft® Windows® XP Professional operation system with Service Pack 3 (SP3) or Windows 7 Enterprise or Professional operating system (32-bit or 64-bit)
- Microsoft .NET Framework 4.0 or later

Notes:

- *Tracer TU is designed and validated for this minimum laptop configuration. Any variation from this configuration may have different results. Therefore, support for Tracer TU is limited to only those laptops with the configuration previously specified.*
- *For more information, see TTU-SVN01A-EN Tracer TU Getting Started Guide*

Figure 53. Tracer TU

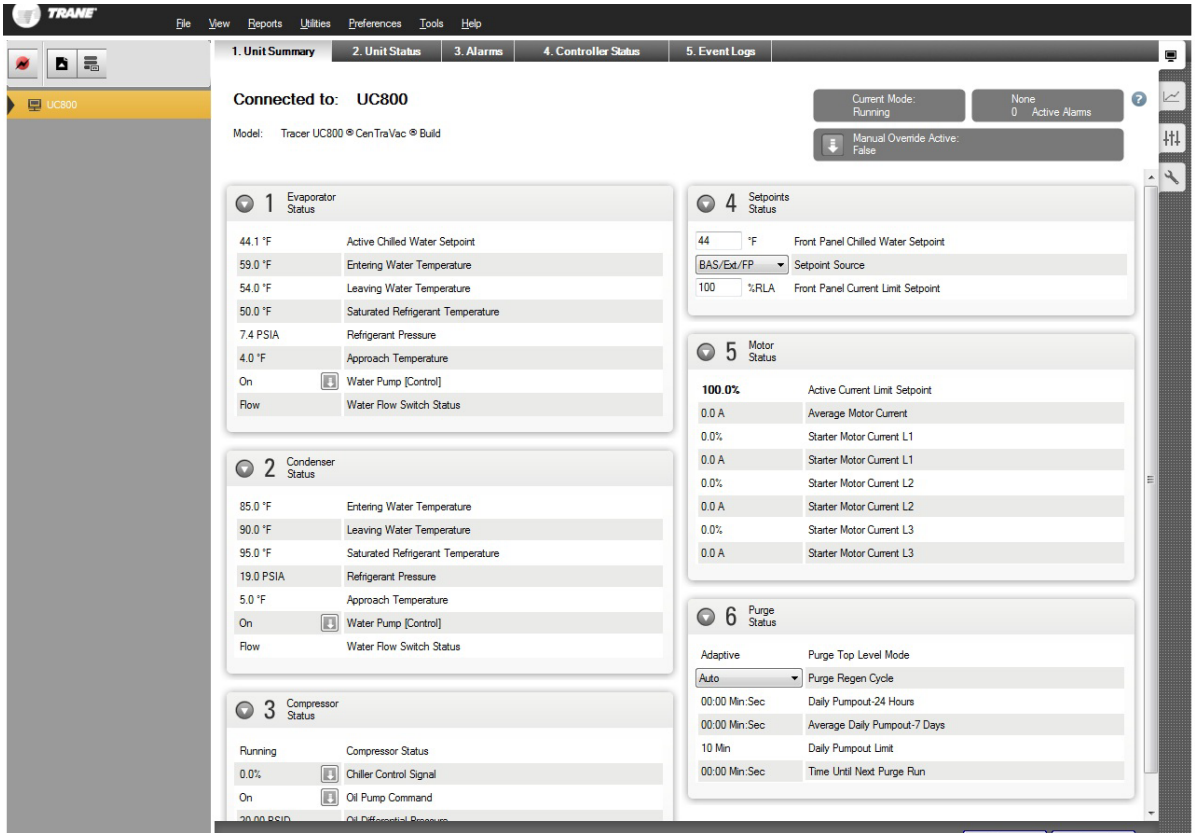

Pre-Start

Upon completion of installation, complete the Stealth™ RTAE Installation Completion Check Sheet and Request for Trane Service checklist in chapter "Log and Check Sheet," p. 90.

Important: *Start-up must be performed by Trane or an agent of Trane specifically authorized to perform start-up and warranty of Trane products. Contractor shall provide Trane (or an agent of Trane specifically authorized to perform start-up) with notice of the scheduled start-up at least two weeks prior to the scheduled start-up.*

Start-Up and Shutdown

Important: *Initial unit commissioning start-up must be performed by Trane or an agent of Trane specifically authorized to perform start-up and warranty of Trane products. Contractor shall provide Trane (or an agent of Trane specifically authorized to perform start-up) with notice of the scheduled start-up at least two weeks prior to the scheduled start-up.*

Unit Start-Up

NOTICE:

Equipment Damage!

Ensure that the compressor and oil sump heaters have been operating properly for a minimum of 24 hours before starting. Failure to do so could result in equipment damage.

If required, once the system has been operating for approximately 30 minutes and has become stabilized, complete the remaining start-up procedures, as follows:

1. Check the evaporator refrigerant pressure and the condenser refrigerant pressure under Refrigerant Report on the AdaptiView ™ TD7. The pressures are referenced to sea level (14.6960 psia).
2. Check the EXV sight glasses after sufficient time has elapsed to stabilize the chiller. The refrigerant flow past the sight glasses should be clear. Bubbles in the refrigerant indicate either low refrigerant charge or excessive pressure drop in the liquid line or a stuck open expansion valve. A restriction in the line can sometimes be identified by a noticeable temperature differential between the two sides of the restriction. Frost will often form on the line at this point. Proper refrigerant charges are shown in the General Information Section.

Important: *A clear sight glass alone does not mean that the system is properly charged. Also check system subcooling, liquid level control and unit operating pressures.*

If chiller is limited by any limiting conditions, contact local Trane service organization for more information.

Temporary Shutdown And Restart

To shut the unit down for a short time, use the following procedure:

1. Press the STOP key on the Adaptiview TD7. The compressors will continue to operate and an operational pumpdown cycle will be initiated..
2. UC800 pump control will turn off the pump (after a minimum 1 min. delay) when the STOP key is pressed and automatically restart the pump when the unit starts normally.
3. The unit will start normally, provided the following conditions exist:
   a. The UC800 receives a call for cooling and the differential-to-start is above the setpoint.
   b. All system operating interlocks and safety circuits are satisfied.

Extended Shutdown Procedure

The following procedure is to be followed if the system is to be taken out of service for an extended period of time, e.g. seasonal shutdown:

1. Test the unit for refrigerant leaks and repair as necessary.
2. Open the electrical disconnect for the chilled water pump. Lock the switches in the “OPEN” position.

NOTICE:

Equipment Damage!

To prevent pump damage, lock the chilled water pump disconnects open and verify pump is off before draining water.

3. Close all chilled water supply valves. Drain the water from the evaporator.
4. With the water drained from evaporator, disconnect 115 power from evaporator heaters at terminals 1X4-1 and 1X4-2.

NOTICE:

Equipment Damage!

Applying power to the evaporator heaters when no water is present could result in damage to heaters.

5. Open the main electrical disconnect and lock in the “OPEN” position.

NOTICE:

Equipment Damage!

Lock the disconnect in the “OPEN” position to prevent accidental start-up and damage to the system when it has been shut down for extended periods.

6. At least every three months (quarterly), check the refrigerant pressure in the unit to verify that the refrigerant charge is intact.

Seasonal Unit Start-Up Procedure

1. Close all valves and re-install the drain plugs in the evaporator.
2. Service the auxiliary equipment according to the start-up/maintenance instructions provided by the respective equipment manufacturers.
3. Close the vents in the evaporator chilled water circuits.
4. Open all the valves in the evaporator chilled water circuits.
5. Open all refrigerant valves to verify they are in the open condition.
6. If the evaporator was previously drained, vent and fill the evaporator and chilled water circuit. When all air is removed from the system (including each pass), install the vent plugs in the evaporator water boxes.
7. Check the adjustment and operation of each safety and operating control.
8. Refer to the sequence for daily unit startup for the remainder of the seasonal startup.

System Restart After Extended Shutdown

NOTICE:

Equipment Damage!

Ensure that the compressor and oil sump heaters have been operating properly for a minimum of 24 hours before starting. Failure to do so could result in equipment damage.

Follow the procedures below to restart the unit after extended shutdown:

1. Verify that the liquid line service valves, oil line, compressor discharge service valves and suction service valves are open (backseated).

NOTICE:

Compressor Damage!

Catastrophic damage to the compressor will occur if the oil line shut off valve or the isolation valves are left closed on unit start-up.

2. Check the oil sump level (see "Oil Sump Level Check," p. 69).
3. Fill the evaporator water circuit. Vent the system while it is being filled. Open the vent on the top of the evaporator and condenser while filling and close when filling is completed.

NOTICE:

Proper Water Treatment!

The use of untreated or improperly treated water in this equipment could result in scaling, erosion, corrosion, algae or slime. It is recommended that the services of a qualified water treatment specialist be engaged to determine what water treatment, if any, is required. Trane assumes no responsibility for equipment failures which result from untreated or improperly treated water, or saline or brackish water.

4. Close the fused-disconnect switches that provides power to the chilled water pump.
5. Start the evaporator water pump and, while water is circulating, inspect all piping for leakage. Make any necessary repairs before starting the unit.
6. While the water is circulating, adjust the water flows and check the water pressure drops through the evaporator. See "Evaporator Waterside Pressure Drop Curves," p. 27 and water flow rates in Table 1, p. 10.
7. Verify proper operation of flow switch on the evaporator waterbox.
8. Stop the water pump. The unit is now ready for start-up as described previously.

Sequence of Operation

This section will provide basic information on chiller operation for common events. With microelectronic controls, ladder diagrams cannot show today's complex logic, as the control functions are much more involved than older pneumatic or solid state controls.

Adaptive control algorithms can also complicate the exact sequence of operations. This section illustrates common control sequences.

Software Operation Overview

The Software Operation Overview shown in Figure 54, p. 59 is a diagram of the five possible software states. This diagram can be though of as a state chart, with the arrows and arrow text depicting the transitions between states.

- The text in the circles is the visible top level operating modes that are displayed on Tracer™ AdaptiView.
- The shading of each software state circle corresponds to the shading on the time lines that show the state the chiller is in.

There are five generic states that the software can be in:

- Power Up
- Stopped
- Starting
- Running
- Stopping

Figure 54. Software operation overviewFigure 54

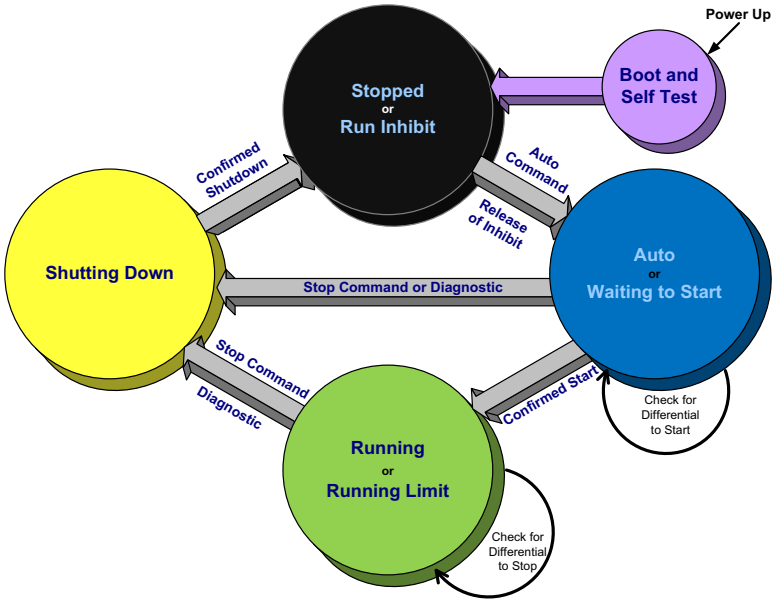

Timelines

- The time line indicates the upper level operating mode, as it would be viewed on the Tracer™ AdaptiView.
- The shading color of the cylinder indicates the software state.
- Text in parentheses indicates sub-mode text as viewed on Tracer AdaptiView.
- Text above the time line cylinder is used to illustrate inputs to the Main Processor. This may include user input to the Tracer AdaptiView Touch screen, control inputs from sensors, or control inputs from a Generic BAS.
- Boxes indicate control actions such as turning on relays, or pulsing compressor load or unload solenoids.
- Smaller cylinders under the main cylinder indicate diagnostic checks.
- Text outside a box or cylinder indicates time based functions.
- Solid double arrows indicate fixed timers.
- Dashed double arrows indicate variable timers.

Power Up Diagram

Figure 55, p. 60 shows the respective TD-7 AdaptiView screens during a power up of the UC800 and display. This process takes 25 seconds for the UC800 and 90 seconds for the display. On all power ups, the software model always will transition through the 'Stopped' Software state independent of the last mode. If the last mode before power down was 'Auto', the transition from 'Stopped' to 'Starting' occurs, but it is not apparent to the user.

Figure 55. Sequence of operation: power up diagram

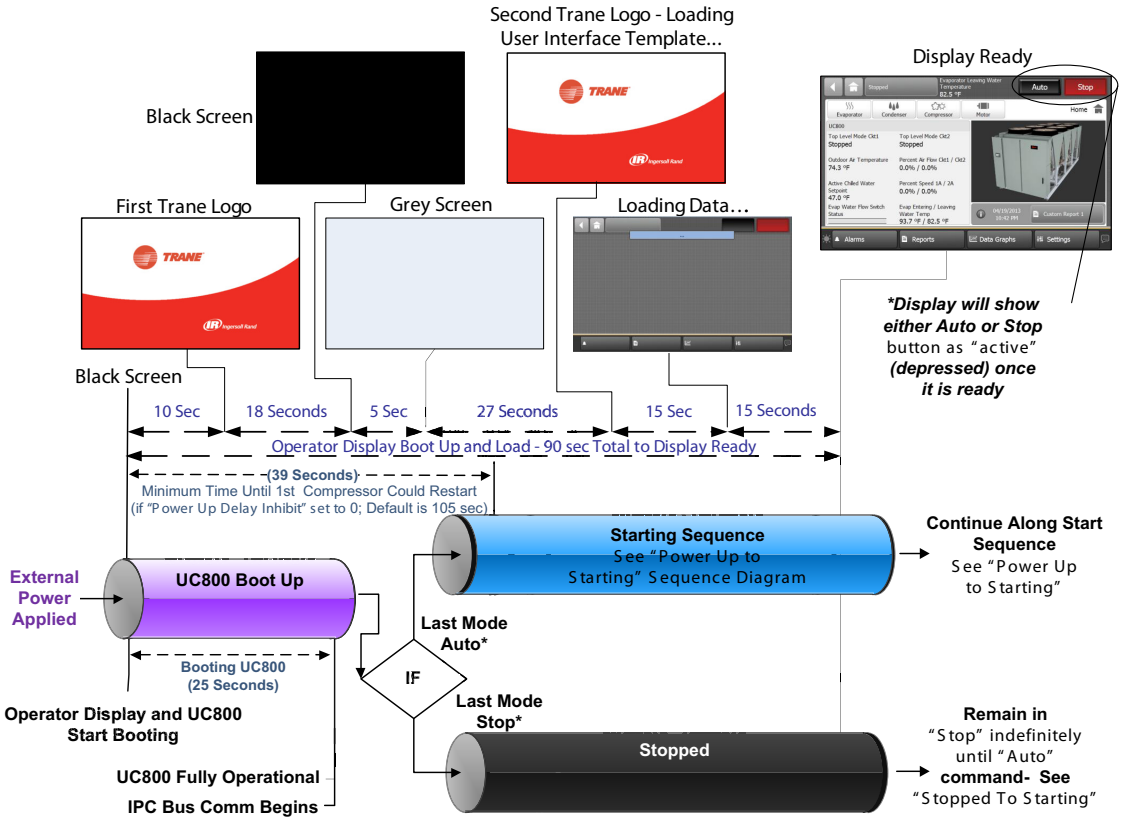

Power Up to Starting

Figure 56, p. 61 diagram shows the timing from a power up event to energizing the 1st compressor. The shortest allowable time would be under the following conditions:

- No motor restart inhibit time left from subsequent starts
- Evaporator Water flow occurs quickly with pump on command
- Power up Start Delay set to 0 minutes
- Need to cool (differential to start) already exists
- Oil level is detected immediately

The above conditions would allow for a minimum power up to starting the 1st compressor time of about 45 seconds (variations may exist due to options installed). Note that it is not advisable to start a chiller "cold", the oil heaters should be in operation for a sufficient length of time prior to first start. Consult the chiller's IOM for specifics.

Figure 56. Sequence of events: power up to starting

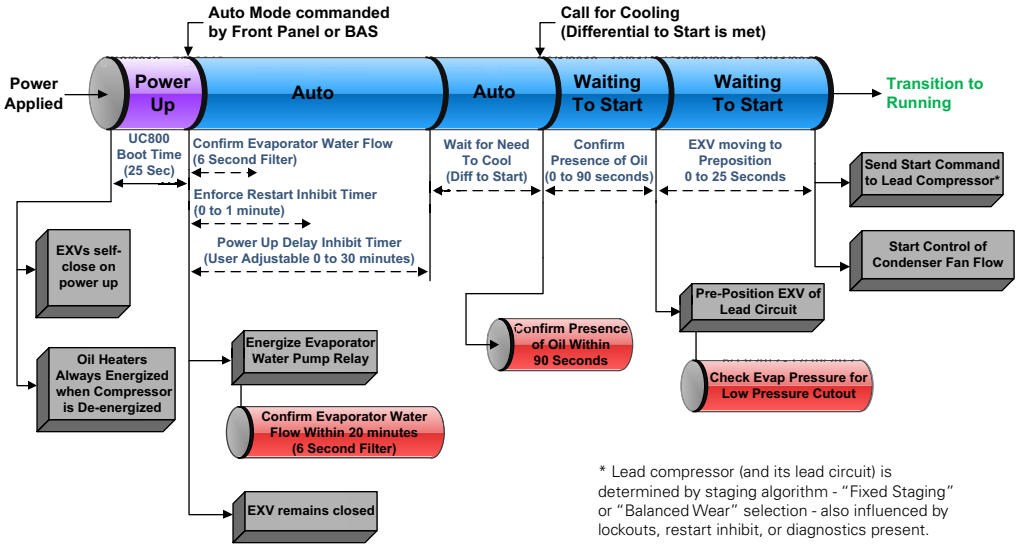

Stopped to Starting

Figure 57 shows the timing from a stopped mode to energizing the 1st compressor. The shortest allowable time would be under the following conditions:

- No motor restart inhibit time left from subsequent starts
- Evaporator Water flow occurs quickly with pump on command
- Need to cool (differential to start) already exists

The above conditions would allow a compressor to start in about 20 seconds.

Figure 57. Sequence of events: stopped to starting

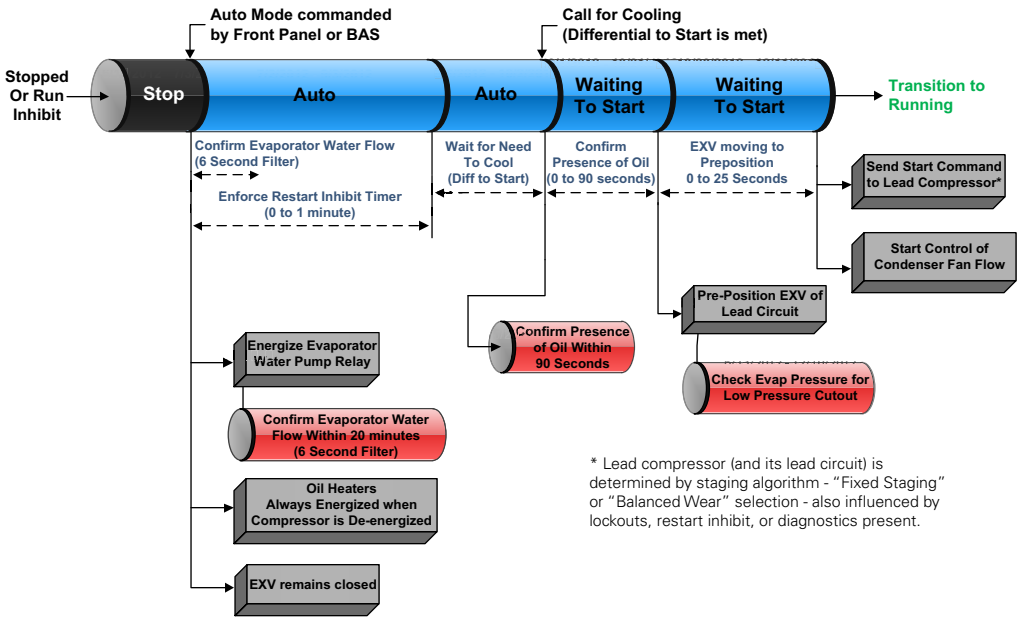

Running (Lead Compressor/Circuit Start and Run)

Figure 58 shows a typical start and run sequence for the lead compressor and its circuit.

Figure 58. Sequence of operation: running (lead compressor/circuit start nd run)

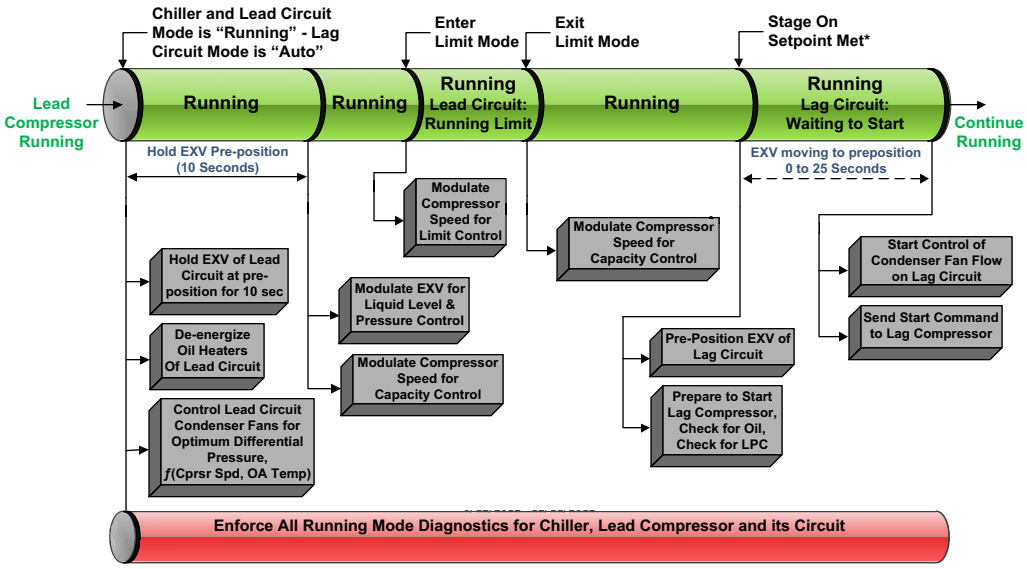

**Note: The decision to stage on or off another compressor is determined by the Average Running Compressor Load Command, Water Temperature Error, and Time Since Last Stage*

Running (Lag Compressor/Circuit Start and Run)

Figure 59 shows a typical start and run sequence for the lag compressor and its circuit.

Figure 59. Sequence of operation: running (lag compressor/circuit start nd run)

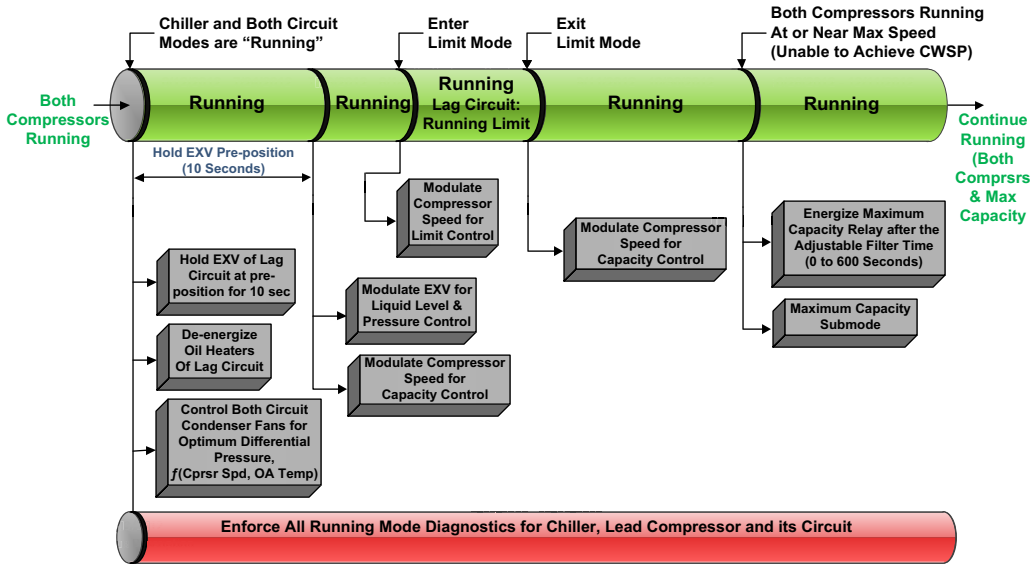

**Note: The decision to stage on or off another compressor is determined by the Average Running Compressor Load Command, Water Temperature Error, and Time Since Last Stage*

Satisfied Setpoint

Figure 60 shows the normal transition from Running to shutting down due to the Evap Leaving water temp falling below the differential to stop setpoint.

Figure 60. Sequence of events: satisfied setpoint

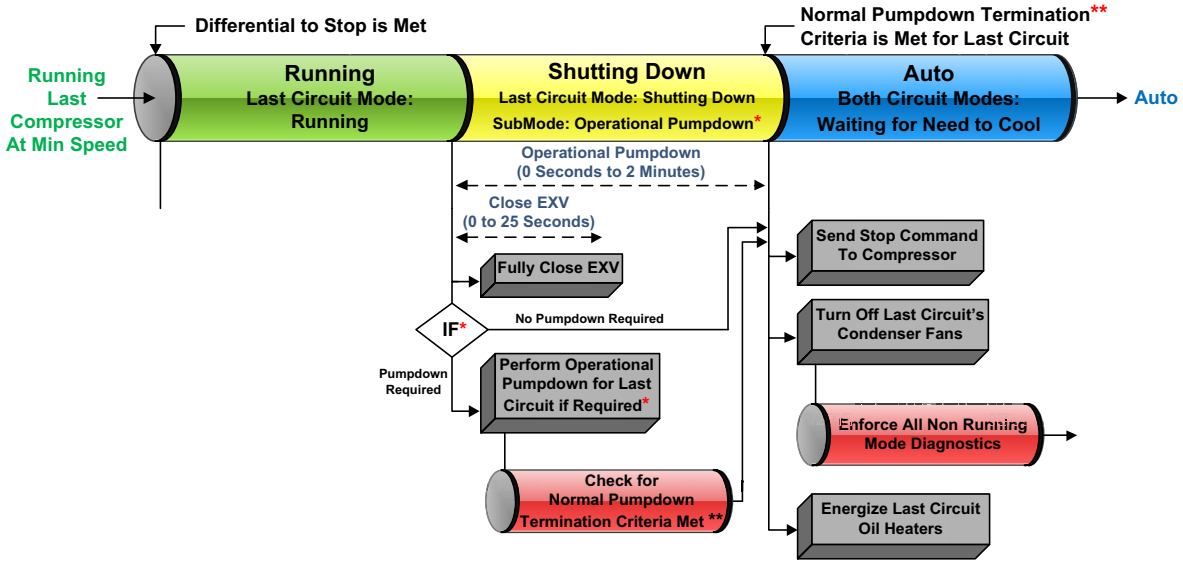

** Note: Operational Pumpdown is required if the Outdoor Air Temperature is less than 50F.*

*** Note: Operational Pumpdown is Terminated Normally when the Evaporator Refrigerant Pressure is at or below 20 PSIA.*
The Maximum Allowed Time for Operational Pumpdown is 2 Minutes.

Normal Shutdown to Stopped or Run Inhibit

Figure 61 shows the Transition from Running through a Normal (friendly) Shutdown. The Dashed lines on the top attempt to show the final mode if you enter the stop via various inputs.

Figure 61. Sequence of events: normal shutdown to stopped or run inhibit

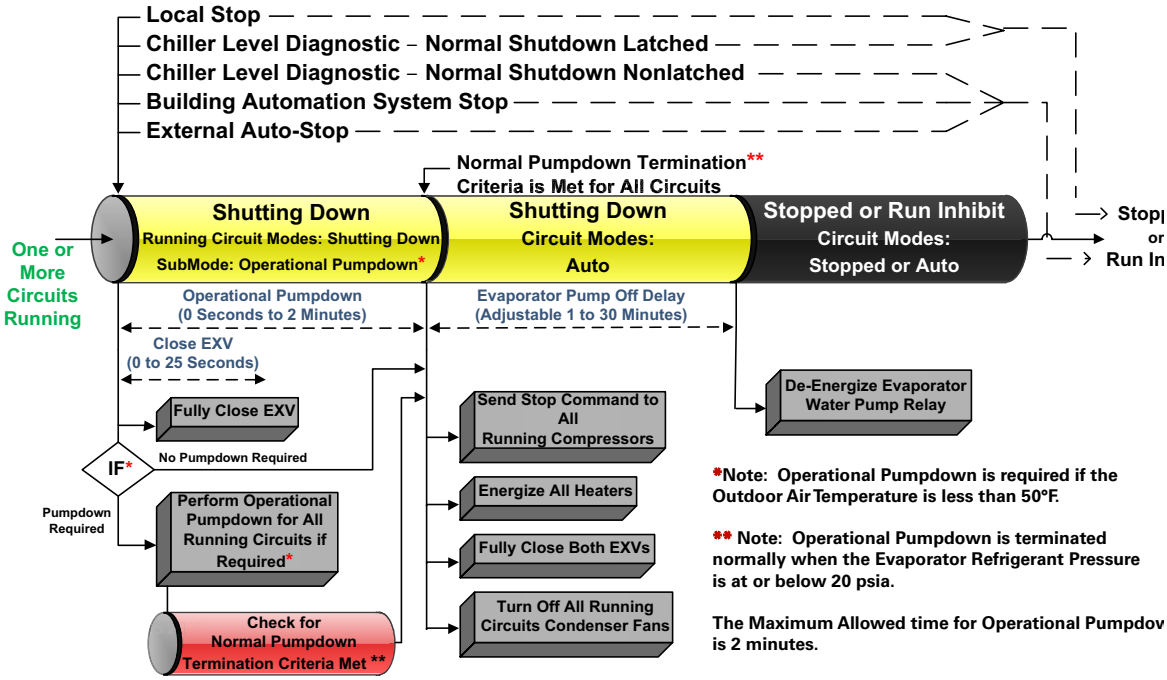

Immediate Shutdown to Stopped or Run Inhibit

Figure 62 Shows the Transition from Running through an Immediate Shutdown. The dashed lines on the to attempt to show the final mode if you enter the stop via various inputs.

Figure 62. Sequence of events: immediate shutdown to stopped or run inhibit

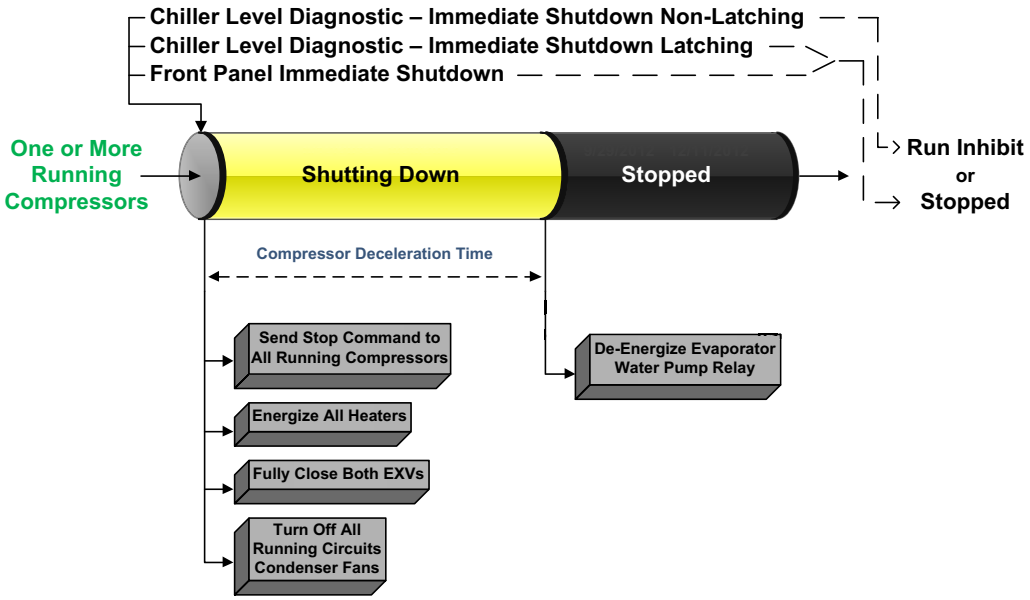

Ice Making (Running to Ice Making to Running)

Figure 63 shows the transition from normal cooling to Ice making, back to normal cooling

Figure 63. Sequence of events: ice making (running to ice making to running)

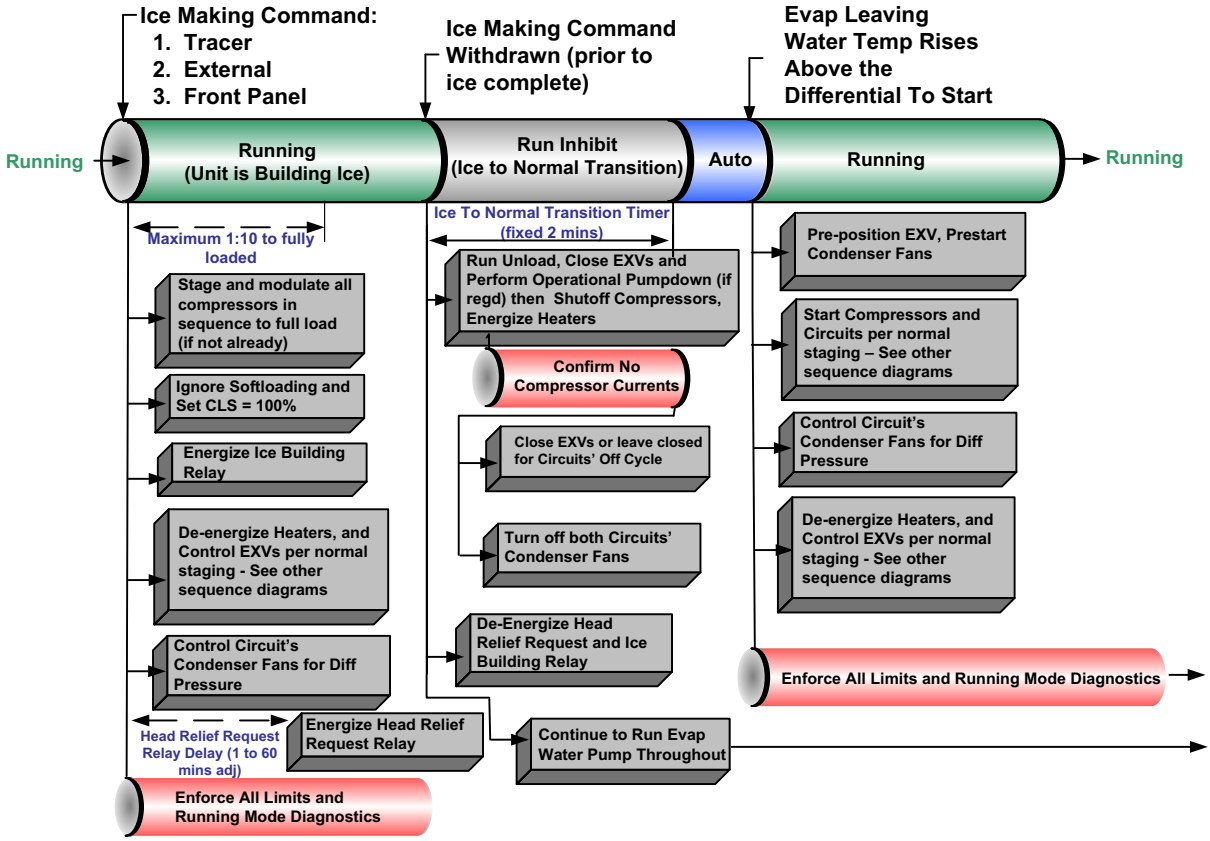

Ice Making (Auto to Ice Making to Ice Making Complete)

Figure 64 shows the transition from Auto to Ice making, to Ice Making Complete.

Figure 64. Sequence of events: ice making (auto to ice making to ice making complete)

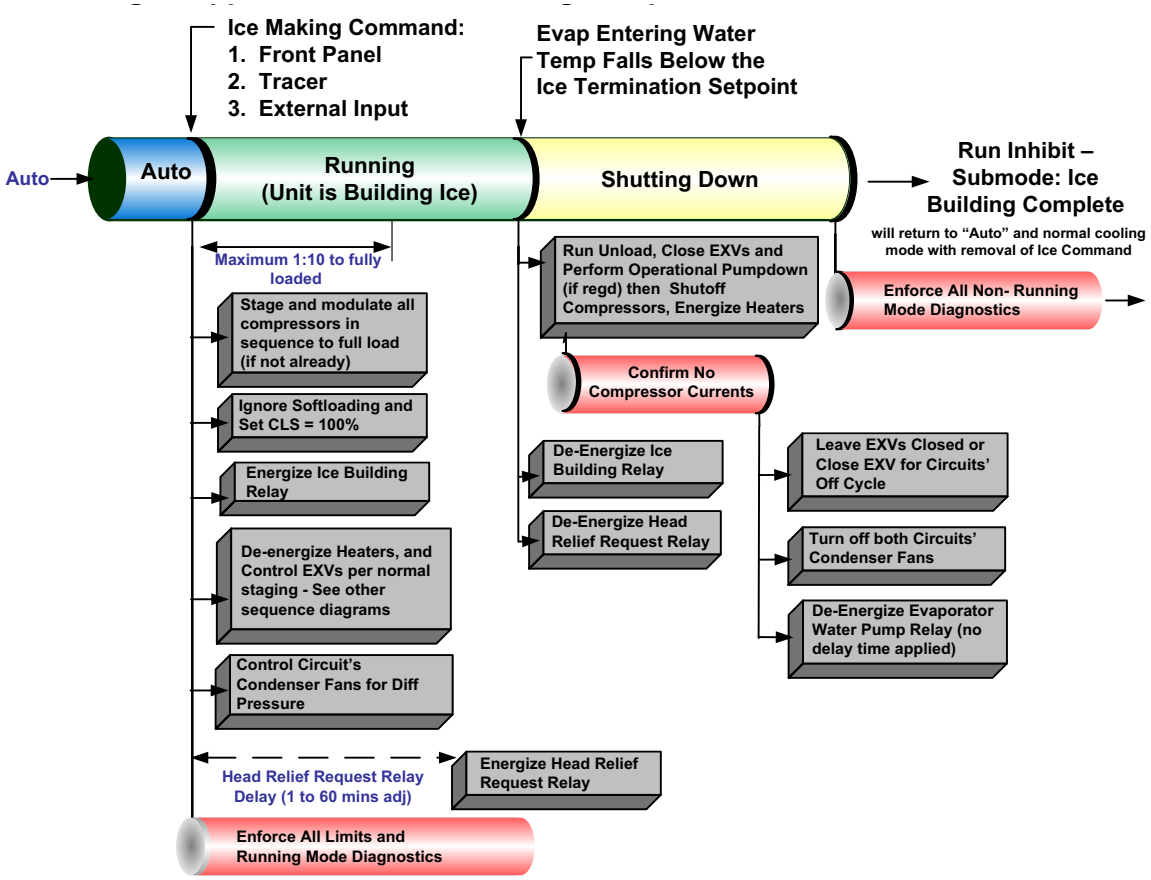

Maintenance

⚠WARNING

Hazardous Voltage - Pressurized Burning Fluid!

The motors in the compressors have strong permanent magnet motors and have the capability to generate voltage during situations when the refrigerant charge is being migrated. This potential will be present at the motor terminals and at the output of the variable speed drives in the power panel.

Before removing compressor terminal box cover for servicing, or servicing power side of control panel, CLOSE COMPRESSOR DISCHARGE SERVICE VALVE and disconnect all electric power including remote disconnects. Discharge all motor start/run capacitors. Follow lockout/tagout procedures to ensure the power cannot be inadvertently energized. Verify with an appropriate voltmeter that all capacitors have discharged.

The compressor contains hot, pressurized refrigerant. Motor terminals act as a seal against this refrigerant. Care should be taken when servicing NOT to damage or loosen motor terminals.

Do not operate compressor without terminal box cover in place.

Failure to follow all electrical safety precautions could result in death or serious injury.

For additional information regarding the safe discharge of capacitors, see **"Adaptive Frequency™ Drive (AFD3) Capacitor Discharge," p. 32** *and PROD-SVB06A-EN.*

⚠WARNING

Hazardous Voltage w/Capacitors!

Disconnect all electric power, including remote disconnects and discharge all motor start/run and AFD (Adaptive Frequency™ Drive) capacitors before servicing. Follow proper lockout/tagout procedures to ensure the power cannot be inadvertently energized.

- **For variable frequency drives or other energy storing components provided by Trane or others, refer to the appropriate manufacturer's literature for allowable waiting periods for discharge of capacitors. Verify with an appropriate voltmeter that all capacitors have discharged.**
- **DC bus capacitors retain hazardous voltages after input power has been disconnected. Follow proper lockout/tagout procedures to ensure the power cannot be inadvertently energized. After disconnecting input power, wait five (5) minutes for the DC capacitors to discharge, then check the voltage with a voltmeter. Make sure DC bus capacitors are discharged (0 VDC) before touching any internal components.**

Failure to follow these instructions could result in death or serious injury.

For additional information regarding the safe discharge of capacitors, see **"Adaptive Frequency™ Drive (AFD3) Capacitor Discharge," p. 32** *and PROD-SVB06A-EN.*

This section describes the basic chiller preventive maintenance procedures, and recommends the intervals at which these procedures should be performed. Use of a periodic maintenance program is important to ensure the best possible performance and efficiency from a Stealth™ chiller.

Use an Operator Log (see "Log and Check Sheet," p. 90) to record an operating history for unit. The log serves as a valuable diagnostic tool for service personnel. By observing trends in operating conditions, an operator can anticipate and prevent problem situations before they occur.

If unit does not operate properly during inspections, see "Diagnostics," p. 73.

Recommended Maintenance

Weekly

While unit is running in stable conditions.

1. At AdaptiView™ TD7 or Tracer™ TU service tool, check pressure for evaporator, condenser and intermediate oil.
2. Observe liquid line sight glass on EXV. If liquid line sight glass has bubbles measure the subcooling entering the EXV. Subcooling should always be greater than 10°F.
3. Inspect the entire system for unusual operation.
4. Inspect the condenser coils for dirt and debris. If the coils are dirty, See "Condenser Coils — Cleaning and Inspection," p. 72.

NOTICE:

Equipment Damage!

Do not use detergents to clean RTAE coils. Use clean water only. Use of detergents on RTAE coils could cause damage to coils.

Monthly

1. Perform all weekly maintenance procedures.
2. Record the system subcooling.

Annual

1. Perform all weekly and monthly procedures.
2. Check oil sump oil level while unit is off. See "Oil Sump Level Check," p. 69.
3. Perform pH test of drive cooling fluid. See "pH Test," p. 71.
4. Have a qualified laboratory perform a compressor oil analysis to determine system moisture content and acid level.
5. Contact a Trane service organization to leak test the chiller, to check operating and safety controls, and to inspect electrical components for deficiencies.
6. Clean and repaint any areas that show signs of corrosion.
7. Clean the condenser coils. See "Condenser Coils — Cleaning and Inspection," p. 72.

NOTICE:

Equipment Damage!

Do not use detergents to clean RTAE coils. Use clean water only. Use of detergents on RTAE coils could cause damage to coils.

Refrigerant and Oil Charge Management

Proper oil and refrigerant charge is essential for proper unit operation, unit performance, and environmental protection. Only trained and licensed service personnel should service the chiller.

Table 30 lists baseline measurements for Stealth units running at AHRI standard operating conditions. If chiller measurements vary significantly from values listed below, problems may exist with refrigerant and oil charge levels. Contact your local Trane office.

Note: *Low temperature applications units will have values that vary from Table 30. Contact your local Trane office for more information.*

Table 30. Typical Stealth baselines (AHRI conditions)

Measurement	Baseline
Evaporator Pressure	51 psia
Evaporator Approach	3.4°F
EXV Position (150-200T units)	45-50% open
EXV Position (225-300T units)	61-64% open
Evaporator delta T - entering	54°F
Evaporator delta T - leaving	44°F
Discharge Superheat	16.5°F
Condenser Pressure	212 psia
Subcooling	10-20°F

Lubrication System

The lubrication system has been designed to keep most of the oil lines filled with oil as long as there is a proper oil level in the oil sump.

Oil Sump Level Check

The oil level in the sump can be measured to give an indication of the system oil charge. Follow the procedures below to measure the level.

1. Run the unit as near to full load as possible for a minimum of 30 minutes. For an accurate reading, 40 or more minutes at full load with normal/steady discharge superheat readings and no limits/warnings is recommended. Assessing oil charge after running at minimum or low loads may lead to an inaccurate reading.
2. Cycle the compressor off line.
3. Let the chiller sit (powered, but off line) to allow the oil separator heater to boil off the refrigerant that may be in the oil separator. An initial assessment of the oil separator level may be made after 30 minutes of heater ON dwell time, but oil charge adjustments should not be made without allowing the oil heaters to run for a minimum of 4 hours.

NOTICE:

Equipment Damage!

Never operate the compressor with the sightglass service valves opened. Close the valves after checking the oil level. Operating compressors with service valves open will result in severe oil loss and equipment damage.

4. Attach a 3/8″ or 1/2″ hose with a sightglass in the middle to the oil sump service valve (1/4″ flare) and the oil separator service valve (1/4″ flare). See Figure 65, p. 70 for valve locations.

   Note: *Using high pressure rated clear hose with appropriate fittings can help speed up the process. Hose must be rated to withstand system pressures as found on unit nameplate.*

Figure 65. Oil service valves

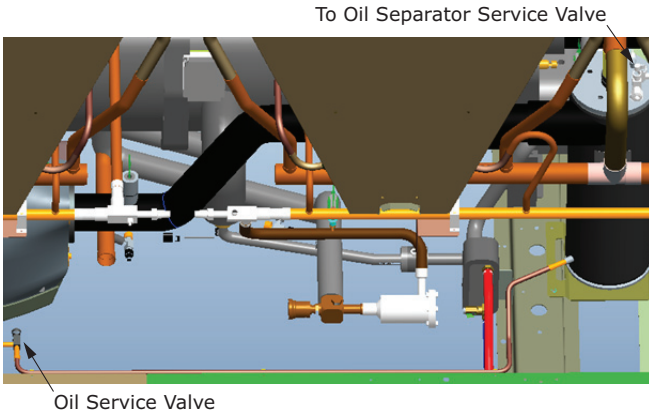

5. After the unit is off line for 30 minutes, move the sightglass along the side of the oil sump.
6. The nominal oil level from the bottom of the oil separator should be as shown in Table 31 and Figure 66, p. 70. Depending on running conditions and oil heater dwell time, some deviation from nominal levels is expected.

Important: *If level is less than 4 inches from the bottom of the oil separator, contact your local Trane office.*

Table 31. Oil sump level height

Unit Size (tons)	Oil Separator Size	Nominal Oil Height
	150-200	**225 - 300**
Oil Separator Size	10″	12″
Nominal Oil Charge Height in (mm)	9	8.5

Figure 66. Nominal oil level

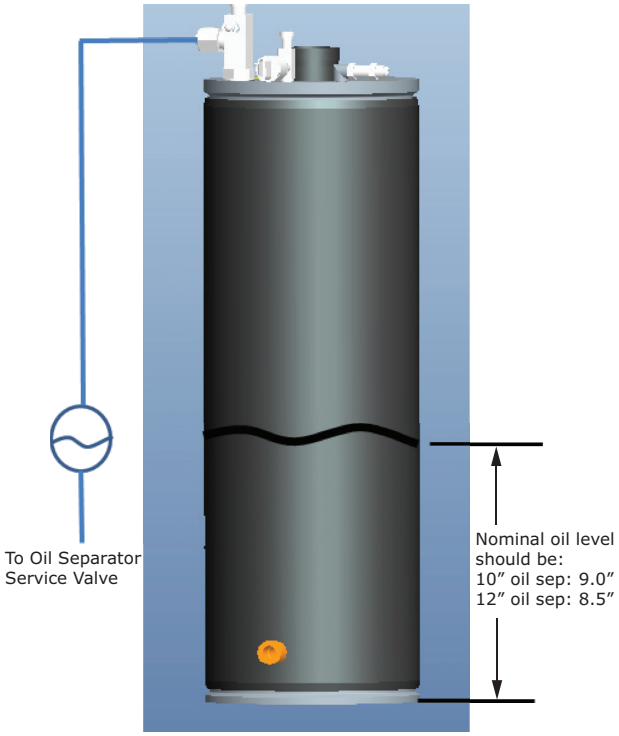

Drive Cooling System

NOTICE:

Equipment Damage!

Use only Trane Heat Transfer Fluid P/N CHM01023. This fluid is a direct use concentration and is not to be diluted. Do not top off with water or any other fluid. Use of unapproved fluids, or dilution of approved fluid could result in catastrophic equipment damage.

Service Intervals

NOTICE:

Equipment Damage!

Drive cooling fluid and strainer must be serviced every five (5) years. Failure to do so could result in equipment damage.

- Every (5) years, contact your local Trane office to service drive fluid and strainer.
- On a yearly basis, a fluid pH test should be performed.

Unit Diagnostics

An improperly filled drive cooling system (either low fluid level or entrapped air in the circuit) can result in the AFD drive or output load inductors overheating. This condition may result in the following diagnostics:

- AFD xA Inverter Heatsink Over Temp
- AFD xA Rectifier Heatsink Over Temp
- AFD xA Estimated Junction Over Temp
- AFD xA Load Inductor High Temperature

A front panel warning of Low Oil Return or AFD Cooling – CktX does not indicate an issue with the drive cooling fluid system, but represents a low refrigerant level reported by the liquid level sensor for a given length of time.

If chiller diagnostics indicated drive cooling system problem, contact your local Trane office.

pH Test

Obtain a sample of fluid from the drive cooling loop via the loop drain located near the oil return heat exchanger. Test for pH level using litmus paper with a 0.5 resolution.

- pH < 8 indicates fluid to be changed
- pH < 7 indicates potential component damage

Pressure Relief Cap

The pressure relief cap is an automotive style pressure-vent radiator cap. See Figure 67, p. 71. The setting for the relief spring is 16 lbs. The function of the relief cap can be verified with a standard automotive radiator cap tester.

Figure 67. Pressure relief cap

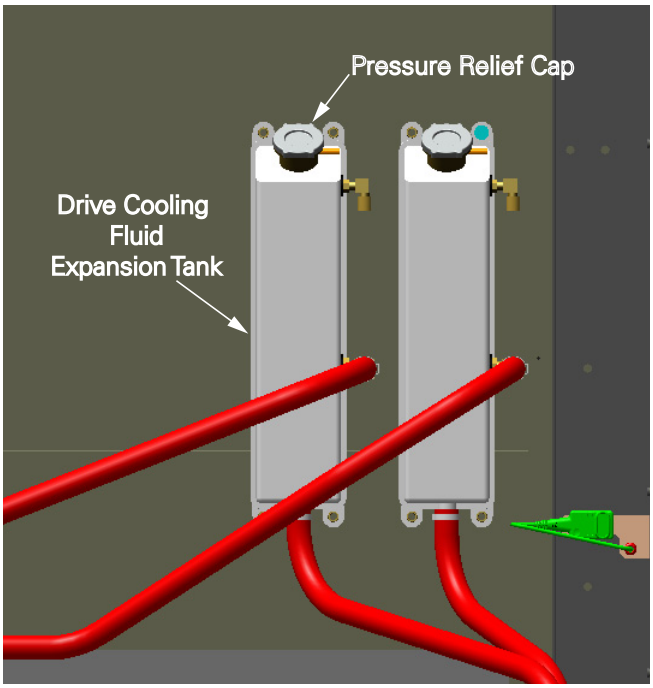

Drive Cooling Expansion Tank

Proper fluid level is important to the operation of the unit. To verify proper level, inspect the liquid level in each of the fluid reservoirs (located behind the chiller control panel). See Figure 68 for fluid levels under various temperature conditions. If levels levels are low, contact your local Trane office.

Figure 68. Drive cooling expansion tank fill[a]

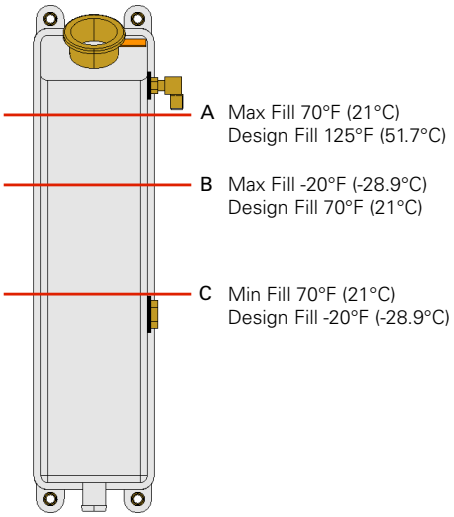

(a) Fill lines are NOT marked on tank. The A level is just below upper fitting, C level is just above lower fitting. B is in the middle of the fittings.

Condenser Coils — Cleaning and Inspection

Coil Cleaning and Inspection Interval

Clean condenser coils at least once a year or more frequently if it is in a "dirty" environment. A clean condenser coil will help maintain chiller operating efficiency. Perform coil inspection each time coils are cleaned.

Cleaning Air Side of RTAE Coils

NOTICE:

Equipment Damage!

Do not use coil cleaning agents to clean uncoated RTAE coils. Use clean water only. Use of coil cleaning agents on uncoated RTAE coils could cause damage to coils.

Do not use detergents to clean the air side of RTAE coils. Use clean water only. Clean from inside out by removing end panels.

Cleaning Coated Coils

⚠WARNING

Hazardous Chemicals!

Coil cleaning agents can be either acidic or highly alkaline and can burn severely if contact with skin occurs. Handle chemical carefully and avoid contact with skin. ALWAYS wear Personal Protective Equipment (PPE) including goggles or face shield, chemical resistant gloves, boots, apron or suit as required. For personal safety refer to the cleaning agent manufacturer's Materials Safety Data Sheet and follow all recommended safe handling practices. Failure to follow all safety instructions could result in death or serious injury.

Coated coils may be cleaned using traditional detergents.

Coil Corrosion Protection Inspection

Inspect corrosion protection at each coil refrigerant connection where the copper tube joins the aluminum manifold. If damaged or missing, wrap new Prestite Insulation (STR01506) on joint to cover area from the aluminum header body to at least 2 inches of the copper tube. Seal insulation using hand pressure. Rubber gloves are suggested when handling insulation.

Reinstallation of Compressor Shipping Bolts

Units with InvisiSound™ Ultimate Only (Model Number Digit 12 = 3)

If compressor removal or unit move is required on a unit with InvisiSound Ultimate option, reinstall compressor shipping bolts which were removed in section "Compressor Shipping Bolt Removal," p. 23.

Servicing Chiller Roof

⚠WARNING

Do Not Climb on Top of Chiller!

Do not climb on roof to service unit. Use service tools designed to access top of chiller. Failure to follow these instructions could result in technician falling off the equipment which could result in death or serious injury.

Service tools are available to access top of chiller. Entry on chiller roof is not required.

Diagnostics

Diagnostic Name and Source: Name of Diagnostic and its source. Note that this is the exact text used in the User Interface and/or Service Tool displays.

Affects Target: Defines the "target" or what is affected by the diagnostic. Usually either the entire Chiller, or a particular Circuit or Compressor is affected by the diagnostic (the same one as the source), but in special cases functions are modified or disabled by the diagnostic. "None" implies that there is no direct affect to the chiller, sub components or functional operation.

Design Note: Functions that are affected by a diagnostic are simply reported as "chiller or circuit x" targets in Tracer TU and on the Alarms page of the AdaptiView™ display, even though only a specific function and not the entire circuit or chiller would be effected.

Severity: Defines the severity of the above effect. Immediate means immediate shutdown of the affected portion, Normal means normal or friendly shutdown of the affected portion, Special Action means a special action or mode of operation (limp along) is invoked, but without shutdown, and Info means an Informational Note or Warning is generated. Design Note: Tracer TU does not support display of "Special Action", on its Diagnostics pages, so that if a diagnostic has a special action defined in the table below, it will be displayed only as "Informational Warning" as long as no circuit or chiller shutdown results. If there is a shutdown and special action defined in the table, then the Tracer TU Diagnostics Page display will indicate the shutdown type only.

Persistence: Defines whether or not the diagnostic and its effects are to be manually reset (Latched), or can be either manually or automatically reset when and if the condition returns to normal (Nonlatched).

Active Modes [Inactive Modes]: States the modes or periods of operation that the diagnostic is active in and, as necessary, those modes or periods that it is specifically "not active" in as an exception to the active modes. The inactive modes are enclosed in brackets, [ ]. Note that the modes used in this column are internal and not generally annunciated to any of the formal mode displays.

Criteria: Quantitatively defines the criteria used in generating the diagnostic and, if nonlatching, the criteria for auto reset.

Reset Level: Defines the lowest level of manual diagnostic reset command which can clear the diagnostic. The manual diagnostic reset levels in order of priority are: Local or Remote. For example, a diagnostic that has a reset level of Remote, can be reset by either a remote diagnostic reset command or by a local diagnostic reset command.

AFD Diagnostics

Table 32. AFD diagnostics

Diagnostic Name and Source	Affects Target	Severity	Persistence	Active Modes [Inactive Modes]	Criteria	Reset Level
AFD xA Temperature Sensor Warning	None	Info	NonLatch – timed reset	All	Any of the 3 IGBT modules (one per phase) has an open or out of range temperature sensor	Local
AFD 1A Voltage Transient Protection Loss	None	Info	NonLatch	All	Circuitry for respective AFD "Panel Interlock Warning" was activated. For RTAE the panel interlock warning input circuitry of AFD1A, is used to monitor the state of the entire unit's Surge Arresters, which is an array of 4 Metal Oxide Varistors intended to protect the entire unit. An open state of the circuit suggests at least one of the MOVs has opened and the transient suppression protection is thereby compromised. Although the unit is not shutdown from this warning diagnostic, it is highly recommended to replace the protection MOVs as soon as practical, in order to protect from further damage to the drives as a result of incoming line transients. Even though the diagnostic has an AFD 1A prefix, it applies to the entire unit	Local

Table 32. AFD diagnostics (continued)

Diagnostic Name and Source	Affects Target	Severity	Persistence	Active Modes [Inactive Modes]	Criteria	Reset Level
AFD xA 12-Pulse or Auto Transf High Temp	Circuit	Immediate	Latch	All	The emergency stop input of the respective AFD was activated (open circuit has been detected). For RTAE units with the Input Harmonic Distortion Option installed, (TDD<5%), the respective drive's Emergency Stop Fault input circuitry is used to monitor and trip on the series connected high limit thermostats of its associated 12-Pulse Autotransformer. For 200, 230 & 575 V units, the same input is used to monitor and trip on the series connected high limit thermostats of the Step-up/Step-down Voltage Autotransformer. Both circuit diagnostics will occur in the event of a high temperature trip of the Voltage Autotransformer. A tripped (open) state of the circuit, suggests an excessively high temperature of the respective transformer– Check the glycol cooling loop, the control panel ventilation or the Voltage Autotransformer panel ventilation fan as applicable.	Local
AFD xA A/D Calibration Error	Circuit	Immediate (decel)	Latch	Starting	Before each start, the A/D converters are calibrated against a known zero-voltage measurement. If the measurement reads more than 3% of full scale, the AFD asserts this A/D Calibration Error diagnostic.	Local
AFD xA AHD Frequency Out of Range	Circuit	Info	NonLatch	Running	The input frequency for the Active Harmonic Damping function of the respective AFD is outside the range 47 Hz < Fin < 63 Hz for more than one minute. This diagnostic is automatically reset when the input frequency returns to the range 47 Hz < Fin < 63 Hz.	Local
AFD xA AHD Sync Signal Error	Circuit	Info	NonLatch	Running	The Active Harmonic Damping function of the respective AFD is experiencing noise or glitching of the input line sync signal continuously for one minute. This diagnostic is automatically reset when the condition clears.	Local
AFD xA Bump Failure	Circuit	Immediate	Latch	Bump Mode	During the compressor bump operation, the motor current exceeded Bump Cutout Current.	Local
AFD xA Bus Over Voltage	Circuit	Immediate	NonLatch	Holding, Running	Bus overvoltage indicated the high bus voltage cut out has been exceeded while the AFD is in a non-stopped mode. The diagnostic will auto-reset when the bus voltage returns to its normal range for 1 minute.	Local
AFD xA Bus Under Voltage	Circuit	Immediate (decel)	NonLatch	Holding, Running	The bus voltage dropped below the Low Bus Cutout threshold and there is not enough voltage to reliably operate the load. The diagnostic will auto-reset when the bus voltage returns to its normal range for 1 minute.	Local
AFD xA Bus Voltage Ripple Too High	Circuit	Immediate	Latch	Running	The DC power bus voltage's ripple exceeds the drive's capability to operate reliably.	Local
AFD xA Comm Loss: Main Processor	Circuit	Immediate (decel)	Latch	All	The AFD detected a continual loss of communication with the main processor for greater than the Communications Loss Time (bound setpoint)	Local
AFD xA Compressor Start Failure	Circuit	Immediate	Latch	Starting	The compressor motor failed to start. This is most likely due to load torque (possibly transients) exceeding the torque capability.	Local
AFD xA Current Sensor Self Test Failure	Circuit	Immediate	Latch	Starting	Self testing indicates a current sensor is not working. Either it output is out of range or it significantly deviates from the expected current trajectory on self-test	Local
AFD xA Desaturation Detected	Circuit	Immediate	Latch	All	Output Short circuit sufficient to drive IGBT transistor gate into desaturation has been detected	Local
AFD xA DSP Board ID Error	Circuit	Immediate (decel)	Latch	Power Up	Occurs when frame size identification does not match the drive software. May occur upon DSP board replacement. Requires rebinding.	Local
AFD xA DSP Board Initialization Failure	Circuit	Immediate (decel)	Latch	Power Up	This results from address bus checking, data bus checking, line sync test, RAM test, each performed during the initialization	Local
AFD xA DSP Board Low Voltage Failure	Circuit	Immediate	NonLatch	All	One of the AFD internal power supplies' voltage has dropped below a reliable operation threshold	Local
AFD xA DSP Board Over Temp	Circuit	Immediate (decel)	NonLatch	All	DSP board thermal switch indicates a temperature above 85°C.	Local

Table 32. AFD diagnostics (continued)

Diagnostic Name and Source	Affects Target	Severity	Persistence	Active Modes [Inactive Modes]	Criteria	Reset Level
AFD xA Estimated Junction Over Temp	Circuit	Immediate (decel)	Latch	Running	The AFD has exceeded the allowed IGBT junction temperature. Suspect a problem with the Drive cooling system or if occurring during start acceleration, a damaged and/or locked rotor compressor	Local
AFD xA Excessive AHD Inhibit	Circuit	Info	Latch	All	The Active Harmonic Damping function of the respective AFD is experiencing noise or glitching of the input line sync signal and has experienced 3 inhibits in one minute or 10 inhibits in one hour.	Local
AFD xA Gate Drive Board Over Temp	Circuit	Immediate (decel)	NonLatch	All	Thermal switch on gate-drive board indicates its temperature exceeds 99°C	Local
AFD xA Gate Drive Fault	Circuit	Immediate	NonLatch	Running	Gate-drive board faults - One of the gate drive module power supplies is out of range	Local
AFD xA Gate Drive Low Voltage Failure	Circuit	Immediate	NonLatch	All	The 24Vdc gate drive supply to the gate drive module has dropped below a reliable operation threshold	Local
AFD xA Gate Drive Module Comm Loss	Circuit	Immediate (decel)	Latch	All	Loss of communication between DSP module and Gate Drive Module	Local
AFD xA Gate Kill Active	Circuit	Immediate	Latch	All	The respective drive's gate-kill circuitry was activated (open circuit). For RTAE, the respective compressor's High Pressure Cutout Switch is wired into this circuit, and will cause an immediate shutdown of the drive and compressor in the event of an HPC trip. A 2nd separate HPC diagnostic will occur in conjunction with this diagnostic – see details of the Main Processor Diagnostic "High Pressure Cutout" below	Local
AFD xA General Failure	Circuit	Immediate (decel)	Latch	All	Drive fault other than those supported in this list.	Local
AFD xA Ground Fault	Circuit	Immediate (decel)	Latch	Running	Measured ground current exceeds ground current sensitivity.	Local
AFD xA IGBT Self Test Failure	Circuit	Immediate	Latch	Starting	Self testing indicates one or more IGBT's is not working.	Local
AFD xA IMC 24V Low Voltage	Circuit	Immediate (decel)	NonLatch	All	Loss of 24V on the IMC/IPC machine bus has been detected by the AFD	Local
AFD xA Instantaneous Current Overload	Circuit	Immediate	Latch	Running	The instantaneous current of any of the output phases exceeded the drive capacity.	Local
AFD xA Invalid Drive Command	Circuit	Info	NonLatch	All	The AFD has reported that it had received a command for an invalid state transition from the main processor (MP). This diagnostic is not supported in 2.0 build	Local
AFD xA Inverter Heatsink Over Temp	Circuit	Immediate (decel)	NonLatch	All	The IGBT heatsink temperature exceeded the cut out temperature.	Local
AFD xA Load Inductor High Temperature	Circuit	Immediate (decel)	NonLatch	All	Circuitry for respective AFD "Panel Interlock Fault" was activated. For RTAE units, the panel interlock fault input circuitry is used to sense the state of the high limit thermostat of its associated load inductors. A tripped (open) state of the circuit, suggest a high temperature of the load inductor – Check the glycol cooling loop and the control panel ventilation	Local
AFD xA Loss of AHD Sync Signal	Circuit	Info	NonLatch	Running	The Active Harmonic Damping function of the respective AFD has received no valid input line sync signals for 1 minute	Local
AFD xA Low Rotor Flux Feedback	Circuit	Immediate (decel)	Latch	Running	The estimated rotor flux dropped below the minimum threshold	Local
AFD xA Motor Current Overload	Circuit	Immediate (decel)	Latch	Running	Compressor Motor Overload "Time to Trip" vs Current curve exceeded	Local
AFD xA Non-Volatile Memory Failure	Circuit	Immediate (decel)	Latch	Power Up	NV Memory does not pass CRC checks during initialization. This fault will normally occur when firmware is upgraded, and can be ignored and reset in that circumstance	Local
AFD xA Output Phase Loss	Circuit	Immediate (decel)	Latch	Running	Drive sensed that an output phase is missing. Output phase loss is defined as greater than 15% output current imbalance for more than 5.0 seconds.	Local
AFD xA Over Speed	Circuit	Immediate	Latch	All	The compressor motor's speed either exceeded Absolute Maximum Speed, or the drive has lost control.	Local

Table 32. AFD diagnostics (continued)

Diagnostic Name and Source	Affects Target	Severity	Persistence	Active Modes [Inactive Modes]	Criteria	Reset Level
AFD xA Rectifier Heatsink Over Temp	Circuit	Immediate (decel)	NonLatch	All	The diode heatsink temperature exceeded the cut out temperature.	Local
AFD xA Watchdog Timer Overflow	Circuit	Immediate	Latch	All	Watchdog timer overflowed. Requires power cycle to restore operation.	Local

Main Processor Diagnostics

Table 33. Main processor diagnostics

Diagnostic Name	Affects Target	Severity	Persistence	Active Modes [Inactive Modes]	Criteria	Reset Level
BAS Communication Lost	None	Special Action	NonLatch	All	The BAS was setup as "installed" at the MP and the Lontalk LCIC lost communications with the BAS for 15 contiguous minutes after it had been established. Refer to Section on Setpoint Arbitration to determine how setpoints and operating modes may be affected by the comm loss. The chiller follows the value of the Tracer Default Run Command which can be previously written by Tracer and stored nonvolatilely by the MP (either use local or shutdown). Note that this diagnostic is never operational for BACnet Communication interface (BCI-C) and only operational with a LonTalk Communication interface (LCI-C) if so configured by the BAS or Tracer system.	Remote
BAS Failed to Establish Communication	None	Special Action	NonLatch	At power-up	The BAS was setup as "installed" and the BAS did not communicate with the Lontalk LCIC within 15 minutes after chiller controls power-up. Refer to Section on Setpoint Arbitration to determine how setpoints and operating modes may be effected. Note that this diagnostic is never operational for BACnet Communication interface (BCI-C) and only operational with a LonTalk Communication interface (LCI-C) if so configured by the BAS or Tracer system.	Remote
Check Clock	Chiller	Info	Latch	All	The real time clock had detected loss of its oscillator at some time in the past. Check / replace battery? This diagnostic can be effectively cleared only by writing a new value to the chiller's time clock using the TU or DynaView's "set chiller time" functions.	Remote
Condenser Fan Inverter Fault - Ckt1	None	Info	NonLatch	All	A fault signal has been detected from at least one of the Variable Speed Inverter Drive Condenser Fans of Circuit 1 (including the right hand fan of the Shared Fan Module if present). No action is taken.	Remote
Condenser Fan Inverter Fault - Ckt2	None	Info	NonLatch	All	A fault signal has been detected from at least one of the Variable Speed Inverter Drive Condenser Fans of Circuit 2 (including the left hand fan of the Shared Fan Module if present). No action is taken.	Remote
Condenser Rfgt Pressure Transducer - Ckt1	Circuit	Immediate	Latch	All	Bad Sensor or LLID	Remote
Condenser Rfgt Pressure Transducer - Ckt2	Circuit	Immediate	Latch	All	Bad Sensor or LLID	Remote
Discharge Rfgt Temp Sensor – Cprsr1A	Circuit	Immediate	Latch	All	Bad Sensor or LLID	Remote
Discharge Rfgt Temp Sensor – Cprsr2A	Circuit	Immediate	Latch	All	Bad Sensor or LLID	Remote
Drive Cooling Supply Temp Sensor – Ckt1	Circuit	Normal	Latch	All	Bad Sensor or LLID.	Remote

Table 33. Main processor diagnostics (continued)

Diagnostic Name	Affects Target	Severity	Persistence	Active Modes [Inactive Modes]	Criteria	Reset Level
Drive Cooling Supply Temp Sensor – Ckt2	Circuit	Normal	Latch	All	Bad Sensor or LLID.	Remote
Emergency Stop	Chiller	Immediate	Latch	All	EMERGENCY STOP input is open. An external interlock has tripped. Time to trip from input opening to unit stop shall be 0.1 to 1.0 seconds.	Local
Evap Rfgt Pool Temp Sensor – Ckt1	Circuit and Chiller	Special Action and Info	NonLatch	All	Bad Sensor or LLID. Note: The Evap Pool Temp Sensors are used for evaporator freeze protection (running and non-running).	Remote
Evap Rfgt Pool Temp Sensor – Ckt2	Circuit and Chiller	Special Action and Info	NonLatch	All	Bad Sensor or LLID. Note: The Evap Pool Temp Sensors are used for evaporator freeze protection (running and non-running).	Remote
Evap Rfgt Pool Temp Sensor Error – Ckt1	Circuit	Info and Special Action	Latch	Ckt Energized [Ckt Not Energized	The evaporator refrigerant pool temperature sensor is indicating a temperature significantly warmer than the evaporator entering water temperature (by more than 7.2°F for 5 continuous min excluding ckt nonoperation and a 2 min ignore time relative to ckt startup). While this diagnostic is active, it will invalidate the evaporator pool temperature sensor. Freeze protection functions (i.e. freeze diagnostics and Evap Pump Override) will default to the respective evaporator pressure transducer and its calculated saturation temperature.	Local
Evap Rfgt Pool Temp Sensor Error – Ckt2	Circuit	Info and Special Action	Latch	Ckt Energized [Ckt Not Energized	The evaporator refrigerant pool temperature sensor is indicating a temperature significantly warmer than the evaporator entering water temperature (by more than 7.2°F for 5 continuous min excluding ckt nonoperation and a 2 min ignore time relative to ckt startup). While this diagnostic is active, it will invalidate the evaporator pool temperature sensor. Freeze protection functions (i.e. freeze diagnostics and Evap Pump Override) will default to the respective evaporator pressure transducer and its calculated saturation temperature.	Local
Evap Spillover Liquid Level Sensor – Ckt1	Circuit	Normal	Latch	All	Bad Sensor or LLID	Remote
Evap Spillover Liquid Level Sensor – Ckt2	Circuit	Normal	Latch	All	Bad Sensor or LLID	Remote
Evap Water Flow (Entering Water Temp)	None	Info	NonLatch	Any Ckt Energized [No Ckts Energized]	The entering evaporator water temp fell below the leaving evaporator water temp by more than 2°F for 180°F-sec, minimum trip time 30 seconds. It can warn of improper flow direction through the evaporator, misbound water temperature sensors, improper sensor installation, partially failed sensors, or other system problems. Note that either entering or leaving water temp sensor or the water system could be at fault.	Remote
Evaporator Approach Error – Ckt1	Circuit	Immediate	Latch	Respective circuit running	The Evaporator approach temperature for the respective circuit (ELWT – Evap Sat Temp Ckt 1) is negative by more than 10°F for 1 minute continuously while the circuit / compressor is operating. Either the Evap Leaving Water Temp sensor, or Evap Suction Rfgt Pressure Transducer Ckt 1 is in error.	Remote
Evaporator Approach Error – Ckt2	Circuit	Immediate	Latch	Respective circuit running	The Evaporator approach temperature for the respective circuit (ELWT – Evap Sat Temp Ckt 2) is negative by more than 10°F for 1 minute continuously while the circuit / compressor is operating. Either the Evap Leaving Water Temp sensor, or Evap Suction Rfgt Pressure Transducer Ckt 2 is in error.	Remote
Evaporator Entering Water Temp Sensor	Chiller	Normal	Latch	All	Bad Sensor or LLID. Note: Entering Water Temp Sensor is used in EXV pressure control as well as ice making so it must cause a unit shutdown even if ice or CHW reset is not installed.	Remote
Evaporator Leaving Water Temp Sensor	Chiller	Normal	Latch	All	Bad Sensor or LLID	Remote
Evaporator Water Flow Lost	Chiller	Immediate	NonLatch	[All Stop modes]	a. The Evaporator water flow switch input was open for more than 6 contiguous seconds (or 15 seconds for thermal dispersion type flow switch). b. This diagnostic does not de-energize the evap pump output. c. 6 seconds of contiguous flow shall clear this diagnostic.	Remote

Table 33. Main processor diagnostics (continued)

Diagnostic Name	Affects Target	Severity	Persistence	Active Modes [Inactive Modes]	Criteria	Reset Level
Evaporator Water Flow Overdue	Chiller	Normal	NonLatch	Estab. Evap. Water Flow on going from STOP to AUTO or Evap Pump Override.	Evaporator water flow was not proven within 20 minutes of the Evaporator water pump relay being energized in normal "Stop" to "Auto" transition. If the pump is overridden to "On" for certain diagnostics, the delay on diagnostic callout shall be only 255 seconds. The pump command status will not be affected by this diagnostic in either case.	Remote
Excessive Condenser Pressure – Ckt1	Circuit	Immediate	Latch	All	The condenser pressure transducer of this circuit has detected a condensing pressure in excess of the design high side pressure as limited by the particular compressor type.	Remote
Excessive Condenser Pressure – Ckt2	Circuit	Immediate	Latch	All	The condenser pressure transducer of this circuit has detected a condensing pressure in excess of the design high side pressure as limited by the particular compressor type.	Remote
External Chilled/Hot Water Setpoint	None	Info	Latch	All	a. Function Not "Enabled": no diagnostics. b. "Enabled ": Out-Of-Range Low or Hi or bad LLID, set diagnostic, default CWS to next level of priority (e.g. Front Panel SetPoint).	Remote
External Demand Limit Setpoint	None	Info	Latch	All	a. Not "Enabled": no diagnostics. b. "Enabled ": Out-Of-Range Low or Hi or bad LLID, set diagnostic, default CLS to next level of priority (e.g. Front Panel SetPoint.	Remote
Failure to Arm or Hold - AFD 1A	Circuit	Info	Nonlatch	All	AFD 1A (controlling Compressor 1A) failed to respond in an appropriate time with its status of Armed to Hold or Hold within the allotted time of 1 minute of the sent command. (Arm to Hold command sent; armed to Hold status received; Hold command sent; Hold status received)	Local
Failure to Arm or Hold - AFD 2A	Circuit	Info	Nonlatch	All	AFD 2A (controlling Compressor 2A) failed to respond in an appropriate time with its status of Armed to Hold or Hold within the allotted time of 1 minute of the sent command. (Arm to Hold command sent; armed to Hold status received; Hold command sent; Hold status received)	Local
Failure to Arm or Start - AFD 1A	Circuit	Immediate	Latch	All	AFD 1A (controlling Compressor 1A) failed to arm or start within the allotted time of 1 minute. (Arm to Start command sent; armed to Start status received; Start command sent; Started status received)	Local
Failure to Arm or Start - AFD 2A	Circuit	Immediate	Latch	All	AFD 2A (controlling Compressor 2A) failed to arm or start within the allotted time of 1 minute. (Arm to Start command sent; armed to Start status received; Start command sent; Started status received)	Local
High Differential Rfgt Pressure - Ckt1	Circuit	Normal	Latch	Cprsr Energized [Service/Op Pumpdown]	The differential pressure for the respective circuit was above 275 Psid (1890 kPa) for 2 consecutive samples 5 seconds apart.	Remote
High Differential Rfgt Pressure - Ckt2	Circuit	Normal	Latch	Cprsr Energized [Service/Op Pumpdown]	The differential pressure for the respective circuit was above 275 Psid (1890 kPa) for 2 consecutive samples 5 seconds apart	Remote
High Discharge Temperature – Cprsr1A	Circuit	Immediate	Latch	All [compressor run unload or compressor not running]	The compressor discharge temperature exceeded 200°F (without oil cooler) or 230ºF (with oil cooler). This diagnostic will be suppressed during Stopping mode or after the compressor has stopped. Note: As part of the Compressor High Temperature Limit Mode (aka Minimum Capacity Limit), the compressor shall be forced loaded as the filtered discharge temperature reaches 190ºF (without oil coolers), or 220ºF (with oil coolers).	Remote
High Discharge Temperature – Cprsr2A	Circuit	Immediate	Latch	All [compressor run unload or compressor not running]	The compressor discharge temperature exceeded 200°F (without oil cooler) or 230ºF (with oil cooler). This diagnostic will be suppressed during Stopping Mode or after the compressor has stopped. Note: As part of the Compressor High Temperature Limit Mode (aka Minimum Capacity Limit), the compressor shall be forced loaded as the filtered discharge temperature reaches 190ºF (without oil coolers), or 220ºF (with oil coolers).	Remote

Table 33. Main processor diagnostics (continued)

Diagnostic Name	Affects Target	Severity	Persistence	Active Modes [Inactive Modes]	Criteria	Reset Level
High Evaporator Refrigerant Pressure	Chiller	Immediate	NonLatch	All	The evaporator refrigerant pressure of either circuit has risen above 190 psig. The evaporator water pump relay will be de-energized to stop the pump regardless of why the pump is running. The diagnostic will auto reset and the pump will return to normal control when all of the evaporator pressures fall below 185 psig. The primary purpose is to stop the evaporator water pump and its associated pump heat from causing refrigerant side pressures, close to the evaporator relief valve setting, when the chiller is not running, such as could occur with Evap Water Flow Overdue or Evaporator Water Flow Loss Diagnostics.	Remote
High Evaporator Water Temperature	Chiller	Info and Special Action	NonLatch	Only effective if either 1)Evap Wtr Flow Overdue, 2)Evap Wtr Flow Loss, or 3)Low Evap Rfgt Temp,-Unit Off, diagnostic is active.	Either the leaving or the entering water temperature exceeded the high evap water temp limit (TV service menu settable – default 105°F) for 15 continuous seconds. The evaporator water pump relay will be de-energized to stop the pump but only if it is running due one of the diagnostics listed on the left . The diagnostic will auto reset and the pump will return to normal control when both the entering and leaving temperatures fall 5°F below the trip setting. The primary purpose is to stop the evaporator water pump and its associated pump heat from causing excessive waterside temperatures and waterside pressures when the chiller is not running but the evap pump is on due to either Evap Water Flow Overdue, Evaporator Water Flow Loss, or Low Evap Temp – Unit Off Diagnostics. This diagnostic will not auto clear solely due to the clearing of the enabling diagnostic.	Remote
High Motor Winding Temperature - Cprsr1A	Circuit	Immediate	Latch	All	Any of the compressor's motor winding temperature sensors is seen to be beyond the windings rated temperature of 265°F (129.4°C)	Local
High Motor Winding Temperature - Cprsr2A	Circuit	Immediate	Latch	All	Any of the respective compressor's motor winding temperature sensors is seen to be beyond the windings rated temperature of 265°F (129.4°C)	Local
High Pressure Cutout - Cprsr1A	Circuit	Immediate	Latch	All	A high pressure cutout was detected by AFD 1A Gate Kill Input ; trip at 315 ± 5 PSIG.	Local
High Pressure Cutout - Cprsr2A	Circuit	Immediate	Latch	All	A high pressure cutout was detected by AFD 2A Gate Kill Input ; trip at 315 ± 5 PSIG.	Local
High Refrigerant Pressure Ratio – Ckt1	Circuit	Immediate	Latch	Cprsr Energized	The pressure ratio for the respective circuit exceeded 12.3 for 1 contiguous minute while running in any mode. The pressure ratio is defined as Pcond (abs)/Pevap(abs).	Remote
High Refrigerant Pressure Ratio – Ckt2	Circuit	Immediate	Latch	Cprsr Energized	The pressure ratio for the respective circuit exceeded 12.3 for 1 contiguous minute while running in any mode. The pressure ratio is defined as Pcond (abs)/Pevap(abs).	Remote
Interrupt Failure – AFD1A	Circuit	Immediate Shutdown and Special Action	Latch	AFD intended to be OFF	Respective AFD is reporting that it is still running the compressor when the MP has commanded the drive/ compressor to be Off. Detection time shall be 10 seconds minimum and 15 seconds maximum. On detection and until the controller is manually reset: this diagnostic shall be active and the alarm relay shall be energized, the Evap Pump Output will be energized, the effected compressor will be continually commanded off, and be unloaded, while a normal stop shall be commanded to all other compressors. For as long as compressor operation continues, the MP shall continue liquid level, oil return, and fan control on the circuit effected.	Local

Table 33. Main processor diagnostics (continued)

Diagnostic Name	Affects Target	Severity	Persistence	Active Modes [Inactive Modes]	Criteria	Reset Level
Interrupt Failure – AFD2A	Circuit	Immediate Shutdown and Special Action	Latch	AFD intended to be OFF	Respective AFD is reporting that it is still running the compressor when the MP has commanded the drive/ compressor to be Off. Detection time shall be 10 seconds minimum and 15 seconds maximum. On detection and until the controller is manually reset: this diagnostic shall be active and the alarm relay shall be energized, the Evap Pump Output will be energized, the effected compressor will be continually commanded off, and be unloaded, while a normal stop shall be commanded to all other compressors. For as long as compressor operation continues, the MP shall continue liquid level, oil return, and fan control on the circuit effected.	Local
LCI-C Software Mismatch: Use BAS Tool	Chiller	Info	Nonlatch	All	The neuron software in the LCI-C module does not match the chiller type. Download the proper software into the LCI-C neuron. To do this, use the Rover service tool, or a LonTalk® tool capable of downloading software to a Neuron 3150®.	Remote
Loss of Oil (Running) - Cprsr1A	Circuit	Immediate	Latch	Starter Contactor Energized	In running modes, Oil Loss Level Sensor detects lack of oil in the oil sump feeding the compressor (distinguishing a liquid flow from a vapor flow).	Local
Loss of Oil (Running) - Cprsr2A	Circuit	Immediate	Latch	Starter Contactor Energized	In running modes, Oil Loss Level Sensor detects lack of oil in the oil sump feeding the compressor (distinguishing a liquid flow from a vapor flow).	Local
Loss of Oil (Stopped) – Cprsr1A	Circuit	Immediate Shutdown and Special Action	Latch	Compressor Pre-start [all other modes]	Oil Loss Level Sensor detects a lack of oil in the oil sump feeding the compressor for 90 seconds after EXV preposition is completed on an attempted circuit start. Note: Compressor start is delayed pending oil detection during that time, but not allowed once the diagnostic occurs.	Local
Loss of Oil (Stopped) – Cprsr2A	Circuit	Immediate Shutdown and Special Action	Latch	Compressor Pre-start [all other modes]	Oil Loss Level Sensor detects a lack of oil in the oil sump feeding the compressor for 90 seconds after EXV preposition is completed on an attempted circuit start. Note: Compressor start is delayed pending oil detection during that time, but not allowed once the diagnostic occurs.	Local
Low Differential Rfgt Pressure - Ckt1	Circuit	Immediate	Latch	Cprsr Energized	The system differential pressure (Pc-Pe) for the respective circuit was below 25 psid (240.5 kPa) or the pressure ratio (Pc/ Pe) was less than 1.1 while the compressor is running for a period of time dependent on the deficit (15 sec ignore time from circuit start). Refer to the Oil Flow Protection specification for the time to trip function.	Remote
Low Differential Rfgt Pressure - Ckt2	Circuit	Immediate	Latch	Cprsr Energized	The system differential pressure (Pc-Pe) for the respective circuit was below 25 psid (240.5 kPa) or the pressure ratio (Pc/ Pe) was less than 1.1 while the compressor is running for a period of time dependent on the deficit (15 sec ignore time from circuit start). Refer to the Oil Flow Protection specification for the time to trip function.	Remote
Low Discharge Superheat – Ckt1	Circuit	Normal	Latch	Any Running Mode	While Running Normally, the Discharge Superheat was less than 9 degrees F for more than 4878 degree F seconds. At circuit startup, the Discharge Superheat will be ignored for 5 minutes.	Remote
Low Discharge Superheat – Ckt2	Circuit	Normal	Latch	Any Running Mode	While Running Normally, the Discharge Superheat was less than 9 degrees F for more than 4878 degree F seconds. At circuit startup, the Discharge Superheat will be ignored for 5 minutes.	Remote
Low Evaporator Rfgt Pressure - Ckt1	Circuit	Immediate	Latch	Cprsr Prestart and Cprsr Energized	a. The Evap Refrig Pressure dropped below 10 Psia just prior to compressor start (after EXV preposition). b. During Early Startup Period: the Evap Refrig Pressure fell below a pressure equal to Condenser Pressure ÷ 8 but as limited to not less than 6 or greater than 10 psia. c. After Early Startup Period expires: The Evap Refrig Pressure fell below 16 Psia for 30 seconds or below 10 psia for 5 seconds. (Note: the Early Startup Period for RTAE it is between 1 and 5 min as an inverse function of the Cond Temp measured at time of circuit startup).	Local

Table 33. Main processor diagnostics (continued)

Diagnostic Name	Affects Target	Severity	Persistence	Active Modes [Inactive Modes]	Criteria	Reset Level
Low Evaporator Rfgt Pressure - Ckt2	Circuit	Immediate	Latch	Cprsr Prestart and Cprsr Energized	a. The Evap Refrig Pressure dropped below 10 Psia just prior to compressor start (after EXV preposition). b. During Early Startup Period: the Evap Refrig Pressure fell below a pressure equal to Condenser Pressure ÷ 8 but as limited to not less than 6 or greater than 10 psia. c. After Early Startup Period expires: The Evap Refrig Pressure fell below 16 Psia for 30 seconds or below 10 psia for 5 seconds. (Note: the Early Startup Period for RTAE it is between 1 and 5 min as an inverse function of the Cond Temp measured at time of circuit startup).	Local
Low Evaporator Rfgt Temperature - Ckt1	Circuit	Immediate	Latch	All Ckt Running Modes [Service Pumpdown]	The warmer of either the Evaporator Refrigerant Pool Temperature or the Evaporator Saturated Temperature for the respective circuit, dropped below the Low Refrigerant Temperature Cutout Setpoint for 2250□F-sec (12□F-sec/sec max rate for early circuit startup period) while the circuit was running. The minimum LERTC setpoint is -5□F the point at which oil separates from the refrigerant. The integral is held nonvolatily though power down, is continuously calculated, and can decay or build during the circuit's off cycle as conditions warrant.	Remote
Low Evaporator Rfgt Temperature - Ckt2	Circuit	Immediate	Latch	All Ckt Running Modes [Service Pumpdown]	The warmer of either the Evaporator Refrigerant Pool Temperature or the Evaporator Saturated Temperature for the respective circuit, dropped below the Low Refrigerant Temperature Cutout Setpoint for 2250°F-sec (12°F-sec/sec max rate for early circuit startup period) while the circuit was running. The minimum LERTC setpoint is -5°F the point at which oil separates from the refrigerant. The integral is held nonvolatily though power down, is continuously calculated, and can decay or build during the circuit's off cycle as conditions warrant.	Remote
Low Evaporator Temp (Unit Off) – Ckt1	Evap Pump	Info and Special Action	NonLatch	Unit in Stop Mode, or in Auto Mode and No Ckt's Energzd [Any Ckt Energzd]	The respective circuit's "Chiller Off Cycle Freeze Protection Integral" was seen to be higher than ½ of its trip value while the chiller is in the Stop mode, or in Auto mode with no compressors running, for one minute and more. The COCFP integral is increased if the Average of the Evap Water Temperature and the Evap Refrigerant Pool Temp is below the value of the Low Evap Rfgt Temp Cutout + 4°F. Energize Evap Water Pump and Off-Cycle Freeze Avoidance Request Relay until diagnostic auto resets, then return to normal evap pump control and de-energize the Freeze Avoidance Request. Automatic reset occurs when the respective Evap Rfgt Pool Temp rises 2°F (1.1°C) above the LERTC cutout setting and the COCFP Integral is less than 1/3 of its trip value. This diagnostic even while active, does not prevent operation of either circuit. (At each circuit shutdown, the COCFP integral is initialized to the LERTC integral).	Remote
Low Evaporator Temp (Unit Off) – Ckt2	Evap Pump	Special Action	NonLatch	Unit in Stop Mode, or in Auto Mode and No Ckt's Energzd [Any Ckt Energzd]	The respective circuit's "Chiller Off Cycle Freeze Protection Integral" was seen to be higher than ½ of its trip value while the chiller is in the Stop mode, or in Auto mode with no compressors running, for one minute and more. The COCFP integral is increased if the Average of the Evap Water Temperatures and the Evap Refrigerant Pool Temp is below the value of the Low Evap Rfgt Temp Cutout + 4°F. Energize Evap Water Pump and Off-Cycle Freeze Avoidance Request Relay until diagnostic auto resets, then return to normal evap pump control and de-energize the Freeze Avoidance Request. Automatic reset occurs when the respective Evap Rfgt Pool Temp rises 2°F (1.1°C) above the LERTC cutout setting AND the COCFP Integral is less than 1/3 of its trip value. This diagnostic even while active, does not prevent operation of either circuit. (At each circuit shutdown, the COCFP integral is initialized to the LERTC integral).	Remote

Table 33. Main processor diagnostics (continued)

Diagnostic Name	Affects Target	Severity	Persistence	Active Modes [Inactive Modes]	Criteria	Reset Level
Low Evaporator Water Temp (Unit Off)	Evap Pump and Freeze Avoidance Request Relay	Info and Special Action	NonLatch	Unit in Stop Mode, or in Auto Mode and No Ckt(s) Energzd [Any Ckt Energzd]	Either the entering or leaving evaporator water temp fell below the leaving water temp cutout setting for 30°F-seconds while the Chiller is in the Stop mode, or in Auto mode with no compressors running. Energize Freeze Avoidance Request Relay and Evap Water Pump Relay until diagnostic auto resets, then de-energize the Freeze Avoidance Request Relay and return to normal evap pump control. Automatic reset occurs when both temps rise 2°F (1.1°C) above the cutout setting for 5 minutes, or either circuit starts. This diagnostic even while active, does not prevent operation of either circuit.	Remote
Low Evaporator Water Temp: Unit On	Chiller	Immediate Shutdown and Special Action	NonLatch	Any Ckt[s] Energzd [No Ckt(s) Energzd]	The evaporator entering or leaving water temp fell below the cutout setpoint for 30°F-seconds while the compressor was running. Automatic reset occurs when both of the temperature rises 2°F (1.1°C) above the cutout setting for 2 minutes. This diagnostic shall not de-energize the Evaporator Water Pump Output.	Remote
Low Oil Flow - Cprsr2A	Circuit	Immediate	Latch	Cprsr Energized and Delta P above 15 Psid	The oil pressure transducer for this compressor was indicating an unacceptable oil pressure drop as a % of the available oil pressure to move oil, suggesting significantly reduced oil flow to the compressor. Possible root causes include oil line service valve closed or restricted, dirty or restricted oil filter, or compressor oil line kepner valve malfunction.	Local
Low Oil Flow - Cpsr 1A	Circuit	Immediate	Latch	Cprsr Energized and Delta P above 15 Psid	The oil pressure transducer for this compressor was indicating an unacceptable oil pressure drop as a % of the available oil pressure to move oil, suggesting significantly reduced oil flow to the compressor. Possible root causes include oil line service valve closed or restricted, dirty or restricted oil filter, or compressor oil line kepner valve malfunction.	Local
Low Oil Return or AFD Cooling – Ckt1	Circuit	Info	NonLatch	All Ckt Running Modes	The evaporator's spillover tank refrigerant liquid level, which feeds the oil return and drive cooling heat exchanger, is seen to be less than 90% of its min level for 20 continuous minutes – reset when level gets to 88% of min level. The occurrence of this warning in conjunction with the "Loss of Oil (Running)" or any of the" AFD Over Temp" shutdown diagnostics, suggests either EXV problems or loss of charge is a contributing factor.	
Low Oil Return or AFD Cooling – Ckt2	Circuit	Info	NonLatch	All Ckt Running Modes	The evaporator's spillover tank refrigerant liquid level, which feeds the oil return and drive cooling heat exchanger, is seen to be less than 90% of its min level for 20 continuous minutes – reset when level gets to 88% of min level. The occurrence of this warning in conjunction with the "Loss of Oil (Running)" or any of the" AFD Over Temperature" shutdown diagnostics, suggests either EXV problems or loss of charge is a contributing factor.	
Motor Winding Temp Sensor - Cprsr1A	Circuit	Info or None	Latch	All	Both of the motor winding temperature sensors are seen to be out of their normal range. (Severity is adjustable via TU Service Tool – default is Info)	Local
Motor Winding Temp Sensor- Cprsr2A	Circuit	Info or None	Latch	All	Both of the motor winding temperature sensors are seen to be out of their normal range. (Severity is adjustable via TU Service Tool – default is Info)	Local
MP Application Memory CRC Error	Chiller	Immediate	Latch	All Modes	Memory error criteria TBD	Remote
MP: Could not Store Starts and Hours	None	Info	Latch	All	MP has determined there was an error with the previous power down store. Starts and Hours may have been lost for the last 24 hours.	Remote
MP: Invalid Configuration	None	Immediate	Latch	All	MP has an invalid configuration based on the current software installed.	Remote
MP: Non-Volatile Memory Reformat	None	Info	Latch	All	MP has determined there was an error in a sector of the Non-Volatile memory and it was reformatted. Check settings.	Remote

Table 33. Main processor diagnostics (continued)

Diagnostic Name	Affects Target	Severity	Persistence	Active Modes [Inactive Modes]	Criteria	Reset Level
MP: Reset Has Occurred	None	Info	NonLatch	All	The main processor has successfully come out of a reset and built its application. A reset may have been due to a power up, or a power loss of a minimum or longer duration to cause an MP power down reset, or when installing new software or defining a new configuration. This diagnostic is immediately and automatically cleared and thus can only be seen in the Historic Diagnostic List in TU.	Remote
No Differential Rfgt Pressure – Ckt1	Circuit	Immediate	Latch	Compressor running on Circuit	The system differential pressure was below 7.7 Psid (53 kPa) for 6 seconds after the 11 seconds ignore time relative to cprsr/ circuit startup had expired.	Remote
No Differential Rfgt Pressure – Ckt2	Circuit	Immediate	Latch	Compressor running on Circuit	The system differential pressure was below 7.7 Psid (53 kPa) for 6 seconds after the 11 seconds ignore time relative to cprsr/ circuit startup had expired.	Remote
Oil Analysis Recommended – Ckt1	Circuit	Info	Latch	"Service Messages" enabled	Diagnostic occurs when accumulated circuit operating hours since last initialized exceeds 2000 hours. Diagnostic can be manually cleared but will reoccur every month (720 hours on real time clock) as long as accumulator is not re-initialized.	Remote
Oil Analysis Recommended – Ckt2	Circuit	Info	Latch	"Service Messages" enabled	Diagnostic occurs when accumulated circuit operating hours since last initialized exceeds 2000 hours. Diagnostic can be manually cleared but will reoccur every month (720 hours on real time clock) as long as accumulator is not re-initialized.	Remote
Oil Filter Change Recommended – Cprsr1A	Circuit	Info	Latch	"Service Messages" enabled	Diagnostic occurs only when "service messages" are enabled and when average oil pressure drop exceeds 18%. Diagnostic can be manually cleared but will reoccur every month (720 hours on real time clock) as long as average pressure drop does not fall below 16%.	Remote
Oil Filter Change Recommended – Cprsr2A	Circuit	Info	Latch	"Service Messages" enabled	Diagnostic occurs only when "service messages" are enabled and when average oil pressure drop exceeds 18%. Diagnostic can be manually cleared but will reoccur every month (720 hours on real time clock) as long as average pressure drop does not fall below 16%.	Remote
Oil Flow Protection Fault – Ckt 1	Circuit	Immediate	Latch	Starter Contactor Energized [all Stop modes]	The Intermediate Oil Pressure Transducer for this cprsr is reading a pressure either above its respective circuit's Condenser Pressure by 15 Psia or more, or below its respective Suction Pressure 10 Psia or more for 30 seconds continuously.	Local
Oil Flow Protection Fault – Ckt2	Circuit	Immediate	Latch	Starter Contactor Energized [all Stop modes]	The Intermediate Oil Pressure Transducer for this cprsr is reading a pressure either above its respective circuit's Condenser Pressure by 15 Psia or more, or below its respective Suction Pressure 10 Psia or more for 30 seconds continuously.	Local
Oil Pressure Transducer – Cprsr1A	Circuit	Immediate	Latch	All	Bad Sensor or LLID	Remote
Oil Pressure Transducer – Cprsr2A	Circuit	Immediate	Latch	All	Bad Sensor or LLID	Remote
Outdoor Air Temperature Sensor	Chiller	Normal Shutdown;	Latch	All	Bad Sensor or LLID. If this diagnostic occurs, operational pumpdown will be performed regardless of the last valid temperature.	Remote
Pumpdown Terminated - Ckt1	Circuit	Info	NonLatch	Service Pumpdown	Service Pumpdown cycle for this circuit was terminated abnormally due to excessive time.(RTAE max Service Pumpdown = 4 min).	Local
Pumpdown Terminated - Ckt2	Circuit	Info	NonLatch	Service Pumpdown	Service Pumpdown cycle for this circuit was terminated abnormally due to excessive. (RTAE max Service Pumpdown = 4 min).	Local
Software Error 1001: Call Trane Service	All functions	Immediate	Latch	All	A high level software watchdog has detected a condition in which there was a continuous 1 minute period of compressor operation, with neither Evaporator water flow nor a" contactor interrupt failure" diagnostic active. The presence of this software error message suggests an internal software problem has been detected. The events that led up to this failure, if known, should be recorded and transmitted to Trane Controls Engineering.	Local

Table 33. Main processor diagnostics (continued)

Diagnostic Name	Affects Target	Severity	Persistence	Active Modes [Inactive Modes]	Criteria	Reset Level
Software Error 1002: Call Trane Service	All functions	Immediate	Latch	All	Reported if state chart misalignment in stopped or inactive state occurred while a compressor was seen to be operating and this condition lasted for at least 1 minute (cmprsr operation due to Service Pumpdown or with Contactor Interrupt Failure diagnostic is excluded). The presence of this software error message suggests an internal software problem has been detected. The events that led up to this failure, if known, should be recorded and transmitted to Trane Controls Engineering.	Local
Software Error 1003: Call Trane Service	All functions	Immediate	Latch	All	Reported if state chart misalignment occurred inferred from either Capacity Control, Circuit, or Compressor State Machines remaining in the Stopping state for more than 3 minutes. The presence of this software error message suggests an internal software problem has been detected. The events that led up to this failure, if known, should be recorded and transmitted to Trane Controls Engineering.	Local
Starts or Hours Modified – Cprsr1A	None	Info	NonLatch	All	The current value for the cumulative starts and or hours for the given compressor have been modified by a write override from TU.	NA
Starts or Hours Modified – Cprsr2A	None	Info	NonLatch	All	The current value for the cumulative starts and or hours for the given compressor have been modified by a write override from TU.	NA
Suction Rfgt Pressure Transducer – Cprsr1A	Circuit	Immediate	Latch	All	Bad Sensor or LLID	Remote
Suction Rfgt Pressure Transducer – Cprsr2A	Circuit	Immediate	Latch	All	Bad Sensor or LLID	Remote
Unexpected Shutdown – AFD1A	Circuit	Normal	Nonlatch	All Cprsr Running modes, Starting, Running and Preparing to Shutdown	The respective AFD status reported back that it is stopped when the MP thinks it should be running and no AFD shutdown diagnostic exists. This diagnostic will be logged in the active buffer and then automatically cleared. This diagnostic could be caused by intermittent communication problems from the AFD to the MP, or due to misbinding.	Remote
Unexpected Shutdown – AFD2A	Circuit	Normal	Nonlatch	All Cprsr Running modes, Starting, Running and Preparing to Shutdown	The respective AFD status reported back that it is stopped when the MP thinks it should be running and no AFD shutdown diagnostic exists. This diagnostic will be logged in the active buffer and then automatically cleared. This diagnostic could be caused by intermittent communication problems from the AFD to the MP, or due to misbinding.	Remote
Very Low Evaporator Rfgt Pressure – Ckt1	Chiller	Immediate	Latch	All	The respective circuit's evaporator pressure dropped below 80% of the current Low Evap Refrig Press Cutout setting (see above) or 8 psia, whichever is less, regardless of the running state of the circuit's compressor. Note: Unlike previous products, even if the circuit associated with the suction pressure transducer is locked out, it will not defeat the protection afforded by this diagnostic.	Local
Very Low Evaporator Rfgt Pressure – Ckt2	Chiller	Immediate	Latch	All	The respective circuit's evaporator pressure dropped below 80% of the current Low Evap Refrig Press Cutout setting (see above) or 8 psia, whichever is less, regardless of the running state of the circuit's compressor. Note: Unlike previous products, even if the circuit associated with the suction pressure transducer is locked out, it will not defeat the protection afforded by this diagnostic.	Local

Communication Diagnostics

Notes:

- *The following communication loss diagnostics will not occur unless that input or output is required to be present by the particular configuration and installed options for the chiller.*
- *Communication diagnostics are named by the Functional Name of the input or output that is no longer being heard from by the Main Processor. Many LLIDs, such as the Quad Relay LLID, have more than one functional output associated with it. A comm loss with such a multiple function board, will generate multiple diagnostics. Refer to the Chiller's wiring diagrams to relate the occurrence of multiple communication diagnostics back to the physical LLID boards that they have been assigned to (bound).*

Table 34. Communication diagnostics

Diagnostic Name	Affects Target	Severity	Persistence	Active Modes [Inactive Modes]	Criteria	Reset Level
Comm Loss: AFD 1A	Circuit	Immediate	NonLatch	All	Continual loss of communication between the MP and the Functional ID has occurred for a 30 second period.	Remote
Comm Loss: AFD 2A	Circuit	Immediate	NonLatch	All	Continual loss of communication between the MP and the Functional ID has occurred for a 30 second period.	Remote
Comm Loss: Chiller % Capacity Output	None	Info	Latch	All	Continual loss of communication between the MP and the Functional ID has occurred for a 30 second period.	Remote
Comm Loss: Cond Fan Enable, Shared Ckt1&2	None	Info	Latch	All	Continual loss of communication between the MP and the Functional ID has occurred for a 30 second period. This is an info warning, as it is conceivable that the circuit may run without the center shared fan deck working if there are many other coils/fans on the circuits.	Remote
Comm Loss: Cond Rfgt Pressure, Ckt1	Circuit	Immediate	Latch	All	Continual loss of communication between the MP and the Functional ID has occurred for a 30 second period.	Remote
Comm Loss: Cond Rfgt Pressure, Ckt2	Circuit	Immediate	Latch	All	Continual loss of communication between the MP and the Functional ID has occurred for a 30 second period.	Remote
Comm Loss: Condenser Fan Enable, Ckt1	Circuit	Normal	Latch	All	Continual loss of communication between the MP and the Functional ID has occurred for a 30 second period.	Remote
Comm Loss: Condenser Fan Enable, Ckt2	Circuit	Normal	Latch	All	Continual loss of communication between the MP and the Functional ID has occurred for a 30 second period.	Remote
Comm Loss: Discharge Temperature, Ckt1	Circuit	Normal	Latch	All	Continual loss of communication between the MP and the Functional ID has occurred for a 30 second period.	Remote
Comm Loss: Discharge Temperature, Ckt2	Circuit	Normal	Latch	All	Continual loss of communication between the MP and the Functional ID has occurred for a 30 second period.	Remote
Comm Loss: Drive Cooling BP Valve, Ckt1	Circuit	Normal	Latch	All	Continual loss of communication between the MP and the Functional ID has occurred for a 30 second period.	Remote
Comm Loss: Drive Cooling BP Valve, Ckt2	Circuit	Normal	Latch	All	Continual loss of communication between the MP and the Functional ID has occurred for a 30 second period.	Remote
Comm Loss: Drive Cooling IL Valve, Ckt1	Circuit	Normal	Latch	All	Continual loss of communication between the MP and the Functional ID has occurred for a 30 second period.	Remote
Comm Loss: Drive Cooling IL Valve, Ckt2	Circuit	Normal	Latch	All	Continual loss of communication between the MP and the Functional ID has occurred for a 30 second period.	Remote
Comm Loss: Drive Cooling Sply Temp, Ckt1	Circuit	Norma	Latch	All	Continual loss of communication between the MP and the Functional ID has occurred for a 30 second period. While this diagnostic is active, the associated Drive Cooling ByPass Valve shall be commanded fully closed.	Remote
Comm Loss: Drive Cooling Sply Temp, Ckt2	Circuit	Norma	Latch	All	Continual loss of communication between the MP and the Functional ID has occurred for a 30 second period. While this diagnostic is active, the associated Drive Cooling ByPass Valve shall be commanded fully closed	Remote

Table 34. Communication diagnostics (continued)

Diagnostic Name	Affects Target	Severity	Persistence	Active Modes [Inactive Modes]	Criteria	Reset Level
Comm Loss: Emergency Stop	Chiller	Normal	Latch	All	Continual loss of communication between the MP and the Functional ID has occurred for a 30 second period.	Remote
Comm Loss: Evap Rfgt Pool Temp, Ckt1	Circuit and Chiller	Special Action and Info	Latch	All	Continual loss of communication between the MP and the Functional ID has occurred for a 30 second period Note: The Evap Pool Temp Sensors are used for both On and Off -cycle freeze protection. Substitute Suction Pressure to Temperature conversion for freeze protection functions.	Remote
Comm Loss: Evap Rfgt Pool Temp, Ckt2	Circuit and Chiller	Special Action and Info	Latch	All	Continual loss of communication between the MP and the Functional ID has occurred for a 30 second period Note: The Evap Pool Temp Sensors are used for both On and Off -cycle freeze protection. Substitute Suction Pressure to Temperature conversion for freeze protection functions.	Remote
Comm Loss: Evaporator Entering Water Temperature	Chiller	Normal	Latch	All	Continual loss of communication between the MP and the Functional ID has occurred for a 30 second period. Note: Entering Water Temp Sensor is used in EXV pressure control as well as ice making & CHW reset, so it must cause a unit shutdown even if Ice or CHW reset is not installed.	Remote
Comm Loss: Evaporator Leaving Water Temperature	Chiller	Normal	Latch	All	Continual loss of communication between the MP and the Functional ID has occurred for a 30 second period.	Remote
Comm Loss: Evaporator Rfgt Liquid Level, Ckt1	Circuit	Normal	Latch	All	Continual loss of communication between the MP and the Functional ID has occurred for a 30 second period.	Remote
Comm Loss: Evaporator Rfgt Liquid Level, Ckt2	Circuit	Normal	Latch	All	Continual loss of communication between the MP and the Functional ID has occurred for a 30 second period.	Remote
Comm Loss: Evaporator Water Flow Switch	Chiller	Immediate	Latch	All	Continual loss of communication between the MP and the Functional ID has occurred for a 30 second period.	Remote
Comm Loss: Evaporator Water Pump Relay	Chiller	Normal	Latch	All	Continual loss of communication between the MP and the Functional ID has occurred for a 30 second period.	Remote
Comm Loss: Expansion Valve, Ckt1	Circuit	Normal	Latch	All	Continual loss of communication between the MP and the Functional ID has occurred for a 30 second period.	Remote
Comm Loss: Expansion Valve, Ckt2	Circuit	Normal	Latch	All	Continual loss of communication between the MP and the Functional ID has occurred for a 30 second period.	Remote
Comm Loss: Ext Noise Reduction Command	None	Info	Latch	All	Continual loss of communication between the MP and the Functional ID has occurred for a 30 second period.	Remote
Comm Loss: External Auto/Stop	Chiller	Normal	Latch	All	Continual loss of communication between the MP and the Functional ID has occurred for a 30 second period.	Remote
Comm Loss: External Chilled/Hot Water Setpoint	External Chilled Water Setpoint	Special Action	Latch	All	Continual loss of communication between the MP and the Functional ID has occurred for a 30 second period. Chiller shall discontinue use of the External Chilled Water Setpoint source and revert to the next higher priority for setpoint arbitration	Remote
Comm Loss: External Ckt Lockout, Ckt1	None	Info	Latch	All	Continual loss of communication between the MP and the Functional ID has occurred for a 30 second period. MP will hold the last lockout state (enabled or disabled) that was in effect at the time of comm loss.	Remote
Comm Loss: External Ckt Lockout, Ckt2	None	Info	Latch	All	Continual loss of communication between the MP and the Functional ID has occurred for a 30 second period. MP will hold the last lockout state (enabled or disabled) that was in effect at the time of comm loss	Remote
Comm Loss: External Demand Limit Setpoint	External Current Limit setpoint	Special Action	Latch	All	Continual loss of communication between the MP and the Functional ID has occurred for a 30 second period. Chiller shall discontinue use of the External Current limit setpoint and revert to the next higher priority for Current Limit setpoint arbitration	Remote

Table 34. Communication diagnostics (continued)

Diagnostic Name	Affects Target	Severity	Persistence	Active Modes [Inactive Modes]	Criteria	Reset Level
Comm Loss: External Ice Building Command	Ice Making Mode	Special Action	Latch	All	Continual loss of communication between the MP and the Functional ID has occurred for a 30 second period. Chiller shall revert to normal (non-ice building) mode regardless of last state.	Remote
Comm Loss: Fan Inverter Fault, Ckt1	None	Info	Latch	All	Continual loss of communication between the MP and the Functional ID has occurred for a 30 second period	Remote
Comm Loss: Fan Inverter Fault, Ckt2	None	Info	Latch	All	Continual loss of communication between the MP and the Functional ID has occurred for a 30 second period.	Remote
Comm Loss: Fan Inverter Speed Cmd, Ckt1	Circuit	Normal	Latch	All	Continual loss of communication between the MP and the Functional ID has occurred for a 30 second period.	Remote
Comm Loss: Fan Inverter Speed Cmd, Ckt2	Circuit	Normal	Latch	All	Continual loss of communication between the MP and the Functional ID has occurred for a 30 second period.	Remote
Comm Loss: Fan Inverter Speed Cmd, Shared Ckt1&2	None	Info	Latch	All	Continual loss of communication between the MP and the Functional ID has occurred for a 30 second period. This is an info warning, as it is conceivable that the circuit may run without the center shared fan deck working if there are many other coils/fans on the circuits.	
Comm Loss: Heat/ Cool Switch	Heat Mode	Special Action	Latch	All	Continual loss of communication between the MP and the Functional ID has occurred for a 30 second period. Chiller shall revert to normal (non-ice building) mode regardless of last state.	Remote
Comm Loss: Ice-Making Status	Ice-Machine	Special Action	Latch	All	Continual loss of communication between the MP and the Functional ID has occurred for a 30 second period. Chiller shall revert to normal (non-ice building) mode regardless of last state.	Remote
Comm Loss: Local BAS Interface	Chiller	Info	NonLatch	All	Continual loss of communication between the MP and the Functional ID has occurred for a 30 second period. Use last valid BAS setpoints. Diagnostic is cleared when successful communication is established with the LonTalk LLID (LCIC) or BACnet LLID (BCIC).	Remote
Comm Loss: Off-cycle Freeze Protection Relay	Chiller	Info	Latch	All	Continual loss of communication between the MP and the Functional ID has occurred for a 30 second period.	Remote
Comm Loss: Oil Loss Level Sensor Input – Ckt1	Circuit	Normal	Latch	All	Continual loss of communication between the MP and the Functional ID has occurred for a 30 second period.	Remote
Comm Loss: Oil Loss Level Sensor Input – Ckt2	Circuit	Normal	Latch	All	Continual loss of communication between the MP and the Functional ID has occurred for a 30 second period.	Remote
Comm Loss: Oil Pressure, Cprsr1A	Circuit	Immediate	Latch	All	Continual loss of communication between the MP and the Functional ID has occurred for a 30 second period.	Remote
Comm Loss: Oil Pressure, Cprsr2A	Circuit	Immediate	Latch	All	Continual loss of communication between the MP and the Functional ID has occurred for a 30 second period.	Remote
Comm Loss: Op Status Programmable Relays	None	Info	Latch	All	Continual loss of communication between the MP and the Functional ID has occurred for a 30 second period.	Remote
Comm Loss: Outdoor Air Temperature	Chiller	Normal Shutdown	Latch	All	Continual loss of communication between the MP and the Functional ID has occurred for a 30 second period. For RTAE if this diagnostic occurs, operational pumpdown will be performed regardless of the last valid temperature	Remote
Comm Loss: Suction Rfgt Pressure, Ckt1	Circuit	Immediate	Latch	All [Ckt/Cprsr lock out]	Continual loss of communication between the MP and the Functional ID has occurred for a 30 second period. Note: This diagnostic is replaced by diagnostic 5FB below with Rev 15.0	Remote
Comm Loss: Suction Rfgt Pressure, Ckt2	Circuit	Immediate	Latch	All [Ckt/Cprsr lock out]	Continual loss of communication between the MP and the Functional ID has occurred for a 30 second period. Note: This diagnostic is replaced by diagnostic 5FD below with Rev 15.0	Remote

Table 34. Communication diagnostics (continued)

Diagnostic Name	Affects Target	Severity	Persistence	Active Modes [Inactive Modes]	Criteria	Reset Level
Comm Loss: Winding Temp 1, Cprsr1A	Circuit	Normal	Latch	All	Continual loss of communication between the MP and the Functional ID has occurred for a 30 second period	Remote
Comm Loss: Winding Temp 1, Cprsr2A	Circuit	Normal	Latch	All	Continual loss of communication between the MP and the Functional ID has occurred for a 30 second period	Remote
Comm Loss: Winding Temp 2, Cprsr2A	Circuit	Normal	Latch	All	Continual loss of communication between the MP and the Functional ID has occurred for a 30 second period	Remote
Comm Loss: Winding Temp 2, Cprsr1A	Circuit	Normal	Latch	All	Continual loss of communication between the MP and the Functional ID has occurred for a 30 second period	Remote

Operator Display Diagnostics and Messages

Table 35. Operator display diagnostics and messages

Operator Display Message	Description / /Troubleshooting
Communication Lost with UC800	• Ethernet cable not connected between display and UC800. • UC800 not powered. • UC800 has an invalid configuration – Download a valid configuration • UC800 is in Binding View. When exit Binding View, select 'Restart' on this message
Display Failed to Establish Communication	• Ethernet cable not connected between display and UC800. • UC800 not powered. • UC800 just has the backup application running as received from the vendor. Download CTV application software. • UC800 has an invalid configuration – Download a valid configuration
Display is about to Restart	• The display is low on memory, and needs to re-start. Select Yes to restart. Selecting Yes will not affect the UC800 operation. Only the Operator Display is reset.
File Not Found	• Update UC800 software with Tracer TU.
Screen partially populated. Auto and Stop button graphics display, no text.	• Valid configuration is not present. Download a configuration.
Screen Unresponsive	• TU is downloading software. Wait till download is complete.
The Page Cannot be found	• Most likely this UC800 has only the backup application. Download the latest UC 800 software build. • This could also mean that the UC800 does not have a valid configuration. Download a configuration to it. • Cycle power to the OD and UC800. • UC could be in binding view. If so, get it out of binding view by navigating to another screen in TU.
UC800 Configuration is Invalid	• Update the UC800 configuration with TU.

Unit Wiring

Table 36 provides a list of electrical schematics, field wiring diagrams and connection diagrams for RTAE units. Complete wiring package is documented in RTAE-SVE001*-EN. A laminated wiring diagram booklet is also shipped with each RTAE unit.

Table 36. RTAE unit wiring drawing numbers

Drawing Number	Description	
Single Circuit Units		
2311-1954	Schematic Diagram	
5724-4483	Fan Location Diagram	
5724-4473	Assembly; Sensor Routing	
2311-1965	Panel Component Location Diagram	
2311-1966	Field Wiring Diagram	
2311-1964	Field Layout Diagram	
Dual Circuit Units[(a)]		
2311-1960	Schematic Diagram	Dual Circuit without CE option
2311-1980	Schematic Diagram	Dual Circuit with CE option
5724-2731	Fan Location Diagram	
5724-2721	Assembly; Sensor Routing	
2311-1963	Panel Component Location Diagram	Dual Circuit without CE option
5724-4573	Panel Component Location Diagram	Dual Circuit with CE option
2311-1961	Field Wiring Diagram	Dual Circuit without CE option
2311-1967	Field Wiring Diagram	Dual Circuit with CE option
2311-1962	Field Layout Diagram	

(a) Dual circuit units with CE option will be indicated by unit model number digit 13=3.

Log and Check Sheet

The operator log and check sheet are included for use as appropriate, for installation completion verification before Trane start-up is scheduled, and for reference during the Trane start-up.

Where the log or check sheet also exists outside of this publication as standalone literature, the literature order number is also listed.

- Stealth™ RTAE Installation Completion Check Sheet and Request for Trane Service (RLC-ADF002-EN)
- Operator Log

Stealth™ RTAE
Installation Completion Check Sheet and Request for Trane Service

Important: *A copy of this completed form must be submitted to the Trane service agency that will be responsible for the start-up of the chiller. Start-up will NOT proceed unless applicable items listed in this form have been satisfactorily completed.*

To:	Trane Service Office:
S.O. Number:	Serial Numbers:
Job/Project Name:	
Address:	
The following items are being installed and will be completed by:	

Important: *Start-up must be performed by Trane or an agent of Trane specifically authorized to perform start-up of Trane® products. Contractor shall provide Trane (or an agent of Trane specifically authorized to perform start-up) with notice of the scheduled start-up at least two weeks prior to the scheduled start-up.*

Check boxes if the task is complete or if the answer is "yes."

1. **Chiller**
   - ☐ Installation meets foundation requirements.
   - ☐ In place and piped.
   - ☐ Isolation pads or elastomeric pads installed (optional).
2. **Piping**
   - ☐ Water piping flushed before making final connections to the system

   Chilled water piping connected to:
     - ☐ Evaporator
     - ☐ Air handling units
     - ☐ Pumps
     - ☐ Flow switch or flow proving device installed (if not factory provided)
     - ☐ Strainer installed and cleaned
   - ☐ Water supply connected to filling system
   - ☐ Systems filled
   - ☐ Pumps run, air bled from system
   - ☐ Strainer installed and cleaned
   - ☐ Relief valve ventilation piping installed (if applicable)
3. **Flow balancing valves installed**
   - ☐ Leaving chilled water
   - ☐ Leaving condenser water (if applicable)
   - ☐ Optional heat recovery or auxiliary condenser water (if applicable)
4. **Gauges, thermometers, and air vents**
   - ☐ Installed on both sides of evaporator
5. **Wiring**
   - ☐ Wire size per submittal and NEC
   - ☐ Full power available
   - ☐ Interconnecting wiring, starter to panel (as required)
   - ☐ External interlocks (flow switch, pumps auxiliary, etc.)
   - ☐ Chilled water pump (connected and tested)
   - ☐ 115 Vac power available for service tools
   - ☐ All controls installed and connected
   - ☐ All magnetic starters installed and connected
6. **Testing**
   - ☐ Dry nitrogen available for pressure testing
   - ☐ Trace gas amounts of R-410A or R-134a available for leak testing, if necessary
7. ☐ **Refrigerant on job site (if nitrogen charge option, model number digit 15 = 2, is chosen)**
8. ☐ **Systems can be operated under load conditions**

9. **Heaters**
   - ☐ If unit was factory charged (model number digit 15 = 1), energize heaters for 24 hours prior to start up.
     Important: *It is required that chiller heaters are energized for a minimum of 24 hours prior to start up. Therefore, chiller should have power for this amount of time before Trane Service arrives to do start-up.*
   - ☐ If unit has nitrogen charge (model number digit 15 = 2), contact Trane Service for unit charging prior to start-up.
     Important: *Do NOT apply shore power to unit with nitrogen charge. Shore power will drive EXV valves, inhibiting ability to adequately vac and charge unit.*
10. **Equipment room**
   - ☐ Does the equipment room have a refrigerant monitor/sensor capable of monitoring and alarming within the allowable exposure level of the refrigerant?
   - ☐ Does the installation have properly placed and operating audible and visual refrigerant alarms?
   - ☐ Does the equipment room have proper mechanical ventilation?
   - ☐ If it is required by local code, is a self-contained breathing apparatus available?
11. **Owner awareness**
   - ☐ Has the owner been fully instructed on the proper use of refrigerant?
   - ☐ Does the owner have a copy of the MSDS for refrigerant?
   - ☐ Was the owner given a copy of the Refrigerant Handling Guidelines?

Note: *Additional time required to properly complete the start-up and commissioning, due to any incompleteness of the installation, will be invoiced at prevailing rates.*

This is to certify that the Trane® equipment has been properly and completely installed, and that the applicable items listed above have been satisfactorily completed.

Checklist completed by: _____

Signed: _____ Date: _____

In accordance with your quotation and our purchase order number _____, we will therefore require the presence of Trane service on this site, for the purpose of start-up and commissioning, by _____ (date).

Note: *Minimum two-week advance notification is required to allow scheduling of the chiller start-up.*

Additional comments/instructions: _____

_____

_____

Note: *A copy of this completed from must be submitted to the Trane Service Office that will be responsible for start-up of chiller.*

Stealth, Trane and the Trane logo are trademarks or registered trademarks of Trane in the United States and other countries.

TRANE®

Trane optimizes the performance of homes and buildings around the world. A business of Ingersoll Rand, the leader in creating and sustaining safe, comfortable and energy efficient environments, Trane offers a broad portfolio of advanced controls and HVAC systems, comprehensive building services, and parts. For more information, visit www.Trane.com.

Trane has a policy of continuous product and product data improvement and reserves the right to change design and specifications without notice.

© 2013 Trane All rights reserved

RLC-ADF002-EN 23 Sep 2013
New

We are committed to using environmentally conscious print practices that reduce waste.

Ingersoll Rand

Operator Log

Stealth™ RTAE Chiller with UC800 Controller - Tracer AdaptiView Reports - Log Sheet				
	Start	**15 minutes**	**30 minutes**	**1 hour**
Evaporator				
Active Chilled Water Setpoint				
Entering Water Temperature				
Leaving Water Temperature				
Ckt 1				
Saturated Refrigerant Temperature (°F)				
Refrigerant Pressure (psia)				
Approach Temperature (°F)				
Water Flow Status				
Spillover Tank Liquid Level (in)				
EXV % Open				
Ckt 2				
Saturated Refrigerant Temperature (°F)				
Refrigerant Pressure (psia)				
Approach Temperature (°F)				
Water Flow Status				
Spillover Tank Liquid Level (in)				
EXV % Open				
Condenser				
Outdoor Air Temperature				
Ckt 1				
Air Flow %				
Saturated Refrigerant Temperature (°F)				
Refrigerant Pressure (psia)				
Ckt 2				
Air Flow %				
Saturated Refrigerant Temperature (°F)				
Refrigerant Pressure (psia)				
Compressor 1A				
Running Status				
Starts				
Running Time (Hr:Min)				
Oil Pressure (psia)				
Motor 1A				
Active Demand Limit Setpoint				
Average Motor Current (%)				
Percent Speed				
AFD Average Input Current (Amps)				
AFD Average Input Voltage (Volts)				
AFD Input Power (kW)				
AFD Output Power (kW)				
AFD Speed (rpm)				
Compressor 2A				
Running Status				
Starts				
Running Time (Hr:Min)				
Oil Pressure (psia)				
Motor 2A				
Active Demand Limit Setpoint				
Average Motor Current (%)				
Percent Speed				
AFD Average Input Current (Amps)				
AFD Average Input Voltage (Volts)				
AFD Input Power (kW)				
AFD Output Power (kW)				
AFD Speed (rpm)				

Date:

Technician:

Owner:

Trane optimizes the performance of homes and buildings around the world. A business of Ingersoll Rand, the leader in creating and sustaining safe, comfortable and energy efficient environments, Trane offers a broad portfolio of advanced controls and HVAC systems, comprehensive building services, and parts. For more information, visit www.Trane.com.

Trane has a policy of continuous product and product data improvement and reserves the right to change design and specifications without notice.

© 2014 Trane All rights reserved

RTAE-SVX001B-EN 29 Oct 2014
Supersedes RTAE-SVX001A-EN (24 Sep 2013)

We are committed to using environmentally conscious print practices that reduce waste.

Submittal

Prepared For:
Lynchburg City Schools

Date: *April 13, 2016*

Job Name:
Paul Munro Elementary Chiller 030816

Trane U.S. Inc. is pleased to provide the enclosed submittal for your review and approval.

Product Summary

Qty	Product
1	Air-Cooled Stealth (TM)

The attached information describes the equipment we propose to furnish for this project, and is submitted for your approval.

Jeff Wolfe
Trane
2303 Trane Drive
Roanoke, VA 24017-1210
Phone: (540) 563-2828
Fax: (540) 366-4958

Table Of Contents

Product Summary **1**

Air-Cooled Stealth (TM) (Item A1) **3**

Tag Data 3
Product Data 3
Performance Data 3
Product Data Report-150T RTAE 4
Mechanical Specifications 5
Unit Dimensions 8
Weight, Clearance & Rigging Diagram 13
Accessory 15
Field Wiring 19

Tag Data - Air-Cooled Stealth (TM) (Qty: 1)

Item	Tag(s)	Qty	Description
A1	150T RTAE	1	Air-Cooled Stealth (TM) (RTAE)

Product Data - Air-Cooled Stealth (TM)

Item: A1 Qty: 1 Tag(s): 150T RTAE

Air-cooled Series R model RTAE
150 ton
460 volt 3 phases 60 Hertz
InvisiSound Superior - line wraps and reduced fan speed
UL listed to US and Canadian Safety Standard
ASME pressure vessel code
Refrigerant charge HFC-134a
AHRI certified
ASHRAE 90.1 - all versions compliant
Standard cooling (40 to 65F/4.4 to 18C)
2 pass evaporator
Fluid type = water
Grooved pipe
Factory installed flow switch - water (35 cm/s)
Evaporator only Insulation high humidity/low evap temp - 1.25"
Wide ambient (0 to 125F)
Aluminum fins with slits
Adaptive Frequency Drive 3rd generation
Single point connection main line unit power-ancillary items require other power
Circuit breaker high fault rated panel
High amp short circuit rating 65,000 amps
Line reactors (~30% TDD)
15a 115v convenience outlet
Tracer TD7 Display
BACnet MS/TP interface (Tracer compatible)
Architectural louvered panels
Elastomeric isolators
Start-up by Trane
5 Year Parts, Labor, and Refrigerant Warranty

Performance Data - Air-Cooled Stealth (TM)

Tags	150T RTAE
Capacity (tons)	143.80
Evap entering temp (F)	54.00
Evap leaving temp (F)	44.00
Evap flow rate (gpm)	343.70
Evap pressure drop (ft H2O)	14.10
Single point power MCA (A)	305.00
Single point power MOP (A)	400.00
IPLV (EER)	18.3
Efficiency (EER)	11.4
A-weighted sound power (dBA)	96
A-weighted 75% sound power (dBA)	94
A-weighted 50% sound power (dBA)	86
A-weighted 25% sound power (dBA)	85
A-weighted sound pressure (dBA)	68
A-weighted 75% sound pressure (dBA)	66
A-weighted 50% sound pressure (dBA)	57
A-weighted 25% sound pressure (dBA)	55

Air-Cooled Stealth (TM)

Mechanical Specifications - Air-Cooled Stealth (TM)
Item: A1 Qty: 1 Tag(s): 150T RTAE

General
Units are leak and pressure tested at 390 psig (2689 kPa) high side, 250 psig (1724 kPa) low side, then evacuated and charged. All Air-cooled Stealth(TM) chillers are factory tested to confirm operation prior to shipment.
Standard power connections include main three phase power to the compressors, condenser fans and control power transformer.
Note: A separate field supplied low voltage power source is required to power the evaporator freeze protection.
Unit panels, structural elements and control boxes are constructed of galvanized steel and mounted on a bolted galvanized steel base. Unit panels, control boxes and the structural base are finished with a baked on powder paint. All paint meets the requirement for outdoor equipment of the US Navy and other federal government agencies.
Anytime water only is present in the evaporator, the Trane UC800 controller must have flow control of the chilled water system. Flow control can be done either directly or through an input to a building automation system to conduct an action resulting in minimum flow through the chiller evaporator barrel to avoid potentially catastrophic damage to the evaporator due to freezing. If the system has sufficient glycol to protect down to the lowest expected ambient, flow control is optional.

General
Units are leak and pressure tested at 390 psig (2689 kPa) high side, 250 psig (1724 kPa) low side, then evacuated and charged. All Air-cooled Stealth(TM) chillers are factory tested to confirm operation prior to shipment.
Standard power connections include main three phase power to the compressors, condenser fans and control power transformer.
Note: A separate field supplied low voltage power source is required to power the evaporator freeze protection and convenience outlet.
Unit panels, structural elements and control boxes are constructed of galvanized steel and mounted on a bolted galvanized steel base. Unit panels, control boxes and the structural base are finished with a baked on powder paint. All paint meets the requirement for outdoor equipment of the US Navy and other federal government agencies.
Anytime water only is present in the evaporator, the Trane UC800 controller must have flow control of the chilled water system. Flow control can be done either directly or through an input to a building automation system to conduct an action resulting in minimum flow through the chiller evaporator barrel to avoid potentially catastrophic damage to the evaporator due to freezing. If the system has sufficient glycol to protect down to the lowest expected ambient, flow control is optional.

Factory Refrigerant Charge (HFC-134a)
Packaged units ship with a full operating charge of oil and HFC-134a refrigerant.

Evaporator
The evaporator is a tube-in-shell heat exchanger design with internally and externally finned copper tubes roller expanded into the tube sheet. The evaporator is designed, tested and stamped in accordance with ASME Pressure Vessel Code Section VIII for a refrigerant side working pressure of 200 psig (1379 kPa). The evaporator is designed for a water side working pressure of 150 psig (1034 kPa). Water connections are grooved pipe. Each shell includes a vent, a drain and fittings for temperature control sensors and is insulated with UV resistant 1.25 inch Armaflex II or equal insulation (K=0.28). Insulation also covers the liquid and suction line and evaporator heads. Heaters, with thermostat, are provided to help protect the evaporator from freezing at ambient temperatures down to -20 F (-29 C), depending on application.

Operating Temperature
Unit is designed for operation in standard leaving evaporator temperature (equal to or greater than 40.0 F).

Pressure Vessel Code
Chiller complies with ASME Pressure Vessel Code Section VIII. ASME nameplates are attached to applicable pressure vessels including oil separators.

Condenser and Fans
Air-cooled condenser coils have aluminum fins mechanically bonded to internally finned aluminum tubing. The tubing is a long life alloy designed to deliver corrosion performance that meets or exceeds microchannel coils. The condenser coil has an integral subcooling circuit. Condensers are factory proof tested at 525.00 psi and leak tested with helium in a mass spectrometer chamber at 150.00 psi. All tube connections are mechanical except the brazed copper to aluminum inlet and outlet connections.
Condenser fans are direct-drive vertical discharge. The condenser fan motors are permanent magnet motors with integrated drive to provide variable speed fan control for all fans. They are designed with permanently lubricated ball bearings, internal temperature and current overload protection, and customer fault feedback as a standard product

offering. The fan impeller is a nine bladed-shrouded fan made from heavy-duty molded plastic.
Wide ambient units will start and operate between 0.0 F to 125.0 F ambient.

InvisiSound Superior
Each rotary screw compressor will have a muffler as standard and each condenser fan will be low noise as standard. In addition to these sound reducing features, InvisiSound Superior adds insulating sound material to the suction and discharge lines of each refrigerant circuit along with a slightly lower rpm fan speed.

Compressor and Lube Oil System
The rotary screw compressor is semi-hermetic, direct drive with capacity control via an adaptive frequency drive, rolling element bearings, differential refrigerant pressure oil pump and oil heater. The motor is a suction gas cooled, hermetically sealed, permanent magnet motor. An oil separator is provided separate from the compressor. Oil filtration is provided internal to the compressor. Check valves in the compressor discharge and lube oil system are also provided.

Drive Cooling System
Each refrigeration circuit has a compressor drive cooling circuit. Each drive cooling circuit includes a wet rotor circulation pump that circulates a secondary heat transfer fluid in a closed system between the adaptive frequency drive components and a brazed plate heat exchanger. The pump is fed from a thermal expansion tank with a vented-pressure cap which is also used as the circuit pressure relief. The circuit also includes a particulate strainer and a drain valve for servicing.

Refrigeration Circuits
Each unit has two refrigerant circuits, with one rotary screw compressor per circuit. Each refrigerant circuit includes a compressor suction and discharge service valve, liquid line shutoff valve, removable core filter, liquid line sight glass with moisture indicator, charging port and an electronic expansion valve. Fully modulating compressors and electronic expansion valves provide variable capacity modulation over the entire operating range.

Unit Controls
All unit controls are housed in an outdoor rated weather tight enclosure with removable plates to allow for customer connection of power wiring and remote interlocks. All controls, including sensors, are factory mounted and tested prior to shipment. Microcomputer controls provide all control functions including startup and shut down, leaving chilled water temperature control, evaporator flow proving, compressor staging and speed control, electronic expansion valve modulation, condenser fan sequencing and speed control, anti-recycle logic, automatic lead/lag compressor starting and load limiting.
The UC-800 unit control module, utilizing Adaptive Control microprocessor, automatically takes action to avoid unit shut-down due to abnormal operating conditions associated with low refrigerant pressure, high condensing pressure, AFD/Compressor current overload, low oil return or low AFD cooling, low discharge superheat, and high compressor discharge temperature. Should the abnormal operating condition continue until a protective limit is violated, the unit will be shut down. Unit protective functions of the UC800, include loss of chilled water flow, evaporator freezing, loss of refrigerant, low refrigerant pressure, high refrigerant pressure, high compressor motor temperature, and loss of oil to the compressor.

Unit Display
A full color TD-7 AdaptiView touch screen display indicates all important unit and circuit parameters, in logical groupings on various screens. The parameters including chilled water set point, leaving chilled water temperature, demand limit set point, evaporator and condenser refrigerant temperatures and pressures, compressor and fan speeds, and all pertinent electrical information. The display also provides on screen trending graphs of predefined parameters as well as customizable trend graphs based on user defined parameters from a list of all available parameters. The display also provides indication of the chiller and circuits top level operating modes with detailed sub-mode reports available with a single key press, as well as diagnostics annunciation and date and time stamped diagnostic history. The standard color display is fully outdoor rated, and, can be viewed in full daylight without opening any control panel doors.
The display is outdoor capable including an UV resistant touchscreen with an operating range between --40.0 F to 158.2 F operating temperature.

Chilled Water Reset
This provides the control logic and factory installed sensors to reset leaving chilled water temperature. The set point can be reset based on ambient temperature or return evaporator water temperature.

Factory Mounted Flow Proving
The factory installed evaporator water flow switch is provided with the control logic and relays to turn the chilled water flow on and off as the chiller requires for operation and protection. The flow switch installed on this chiller is designed for use with water in the evaporator with a set point of 35 cm/s.

Adaptive Frequency Drive
All RTAE chillers utilize Trane's Adaptive Frequency Drive, 3rd Generation (AFD3) technology for controlling the compressor. AFD3 is a family of new generation adaptive frequency drives specifically designed for Trane water chillers. AFD3 incorporates the Trane communication protocol enabling seamless integration with the unit controller. AFD3 data such as drive status, temperatures, modes and diagnostic information are accessible to the unit controller and through the Tracer TU service tool.
AFD3 contains technology that enables the drive to last longer and with less down time. The technology enables operation on various power systems including alternative energy sources. AFD3 will protect itself and the compressor motor from over current, low or high line voltage, phase loss, incoming phase imbalance, and over temperature due to loss of drive cooling or loss of panel ventilation.
AFD3 incorporates improved serviceability and troubleshooting tools to identify the issue quickly and get the chiller back up and running. All AFD3 control circuits are powered with class 2 low voltage - separate from main power allowing service on the controls with the panel door open. Additionally, the main electronic control modules can be serviced with the standard Trane screw driver. The AFD3 further incorporates another Trane service tool to allow for firmware upgrades through Tracer TU.

High Fault Circuit Breaker
A molded case high interrupting capacity circuit breaker, factory wired with terminal block power connections and equipped with a lockable external operator handle, is available to disconnect the chiller from main power.

Short Circuit Current Rating (SCCR)
A short circuit current rating offers a measure of safety for what the starter panel enclosure is able to withstand in the event of an explosion caused by a short circuit.

BACnet BCI-C Interface
BACNet Interface allows the user to easily interface with using BACNet MS/TP via a single twisted-pair wiring to a factory-installed and tested communication board.

Architectural Louvered Panels
Louvered panels cover the complete condensing coil and service area beneath the condenser.

Elastomeric Isolators
Isolators provide isolation between chiller and structure to help eliminate vibration transmission. Elastomeric isolators are more effective and recommended over spring isolators.

Convenience Outlet
Provides a 15 amp, 115 volt (60 Hz) convenience outlet on the unit.
Note: An additional field supplied power connection must be provided to power the convenience outlet.

Unit Dimensions - Air-Cooled Stealth (TM)
Item: A1 Qty: 1 Tag(s): 150T RTAE

NOMINAL TONS	150
WATER CONNECTION DIAMETER (INLET/OUTLET)	5" (125mm)
WATER VOLUME	4044 in3

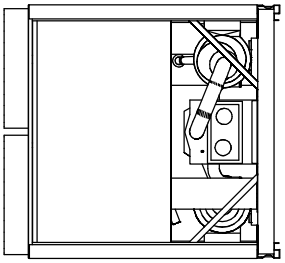

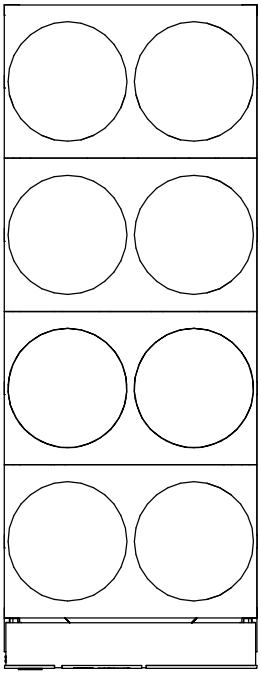

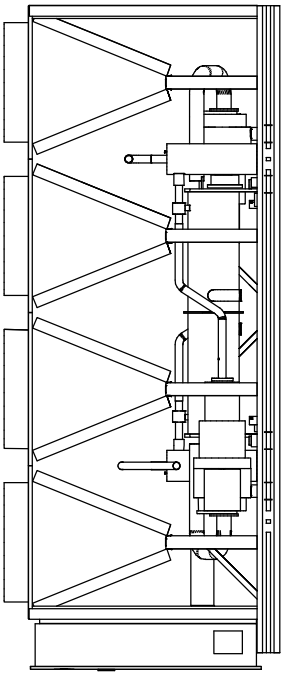

Unit Dimensions - Air-Cooled Stealth (TM)
Item: A1 Qty: 1 Tag(s): 150T RTAE

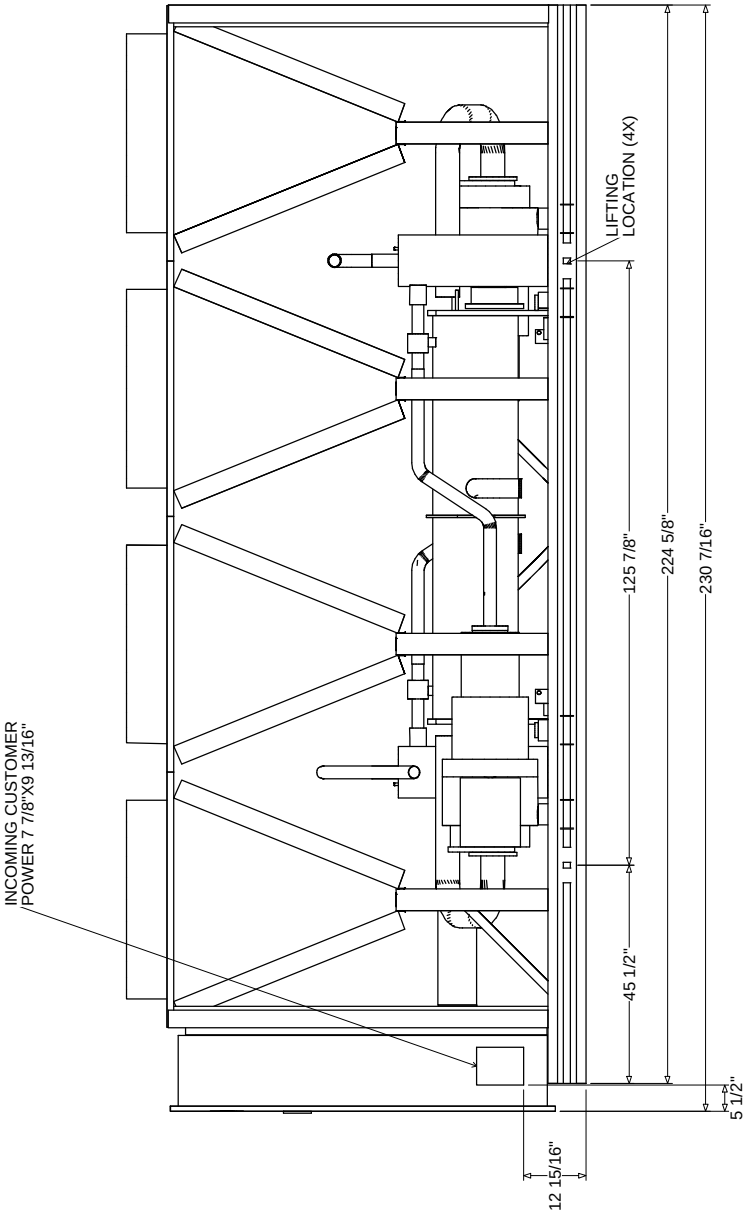

RIGHT SIDE VIEW

Unit Dimensions - Air-Cooled Stealth (TM)
Item: A1 Qty: 1 Tag(s): 150T RTAE

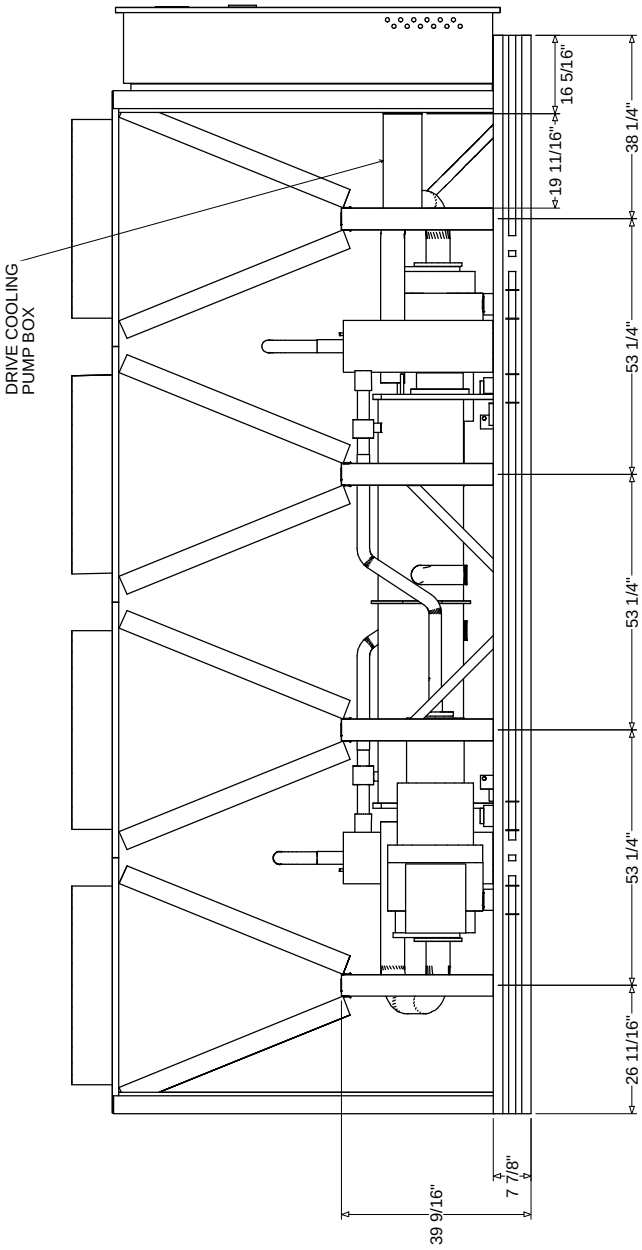

LEFT SIDE VIEW

Unit Dimensions - Air-Cooled Stealth (TM)
Item: A1 Qty: 1 Tag(s): 150T RTAE

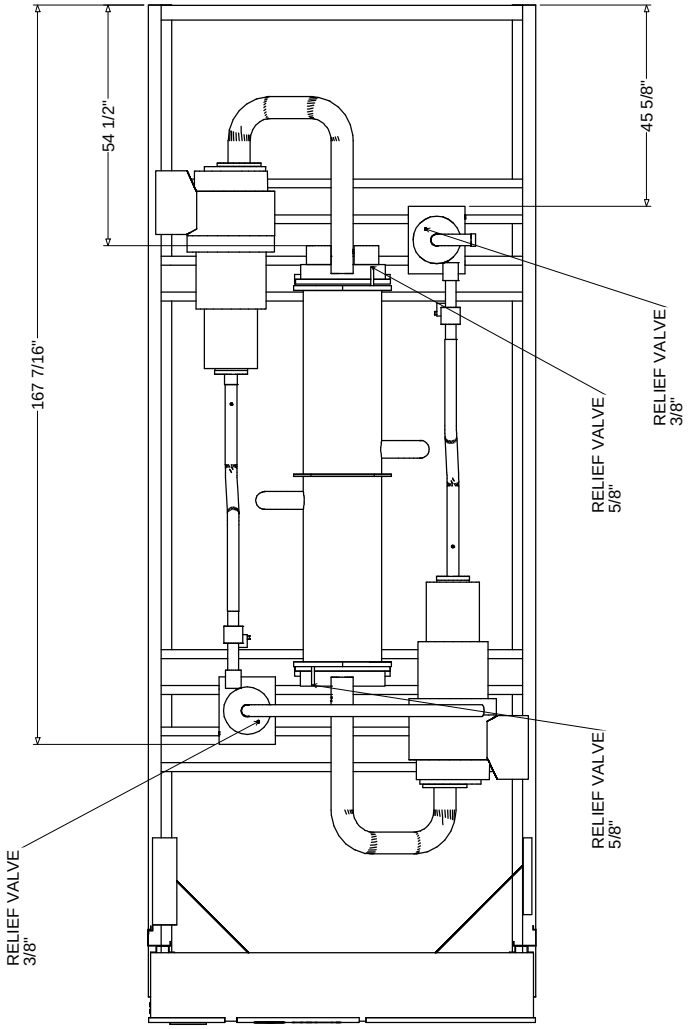

TOP VIEW
(CONDENSER REMOVED FOR CLARITY)

Unit Dimensions - Air-Cooled Stealth (TM)
Item: A1 Qty: 1 Tag(s): 150T RTAE

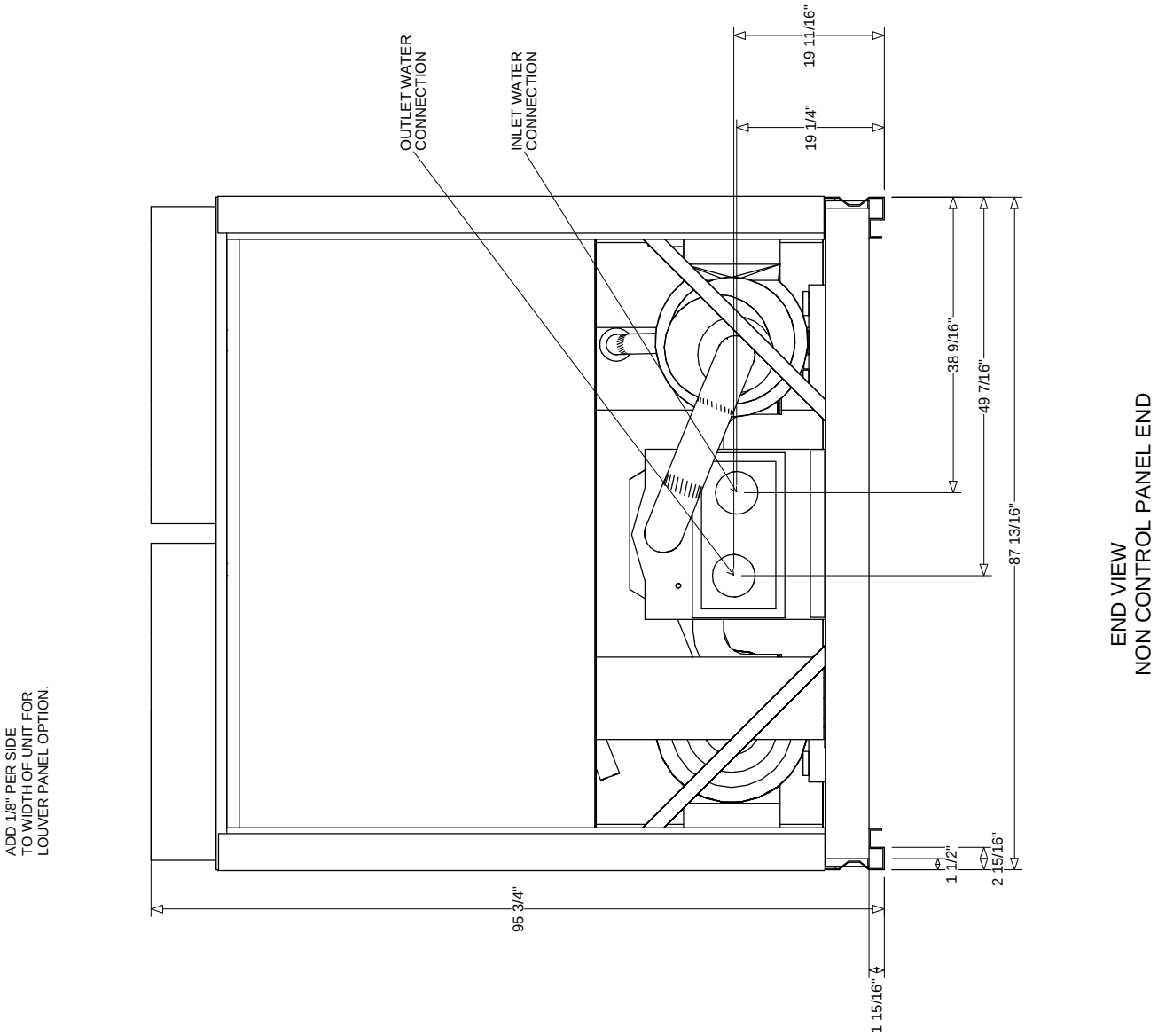

Weight, Clearance & Rigging Diagram - Air-Cooled Stealth (TM)
Item: A1 Qty: 1 Tag(s): 150T RTAE

LIFT 1 WEIGHT	LIFT 2 WEIGHT	LIFT 3 WEIGHT	LIFT 4 WEIGHT
3426.0 lb	2638.0 lb	2234.4 lb	3034.6 lb

TOTAL SHIPPING WEIGHT 11333.0 lb

NOTES:
1. LIFTING CHAINS/CABLES WILL NOT BE THE SAME LENGTH. ADJUST TO KEEP UNIT LEVEL WHILE LIFTING.
2. DO NOT FORK LIFT UNIT.
3. WEIGHTS ARE TYPICAL FOR UNITS WITH R-134A CHARGE.
4. WEIGHTS ARE TYPICAL FOR UNITS WITHOUT LOUVER PANELS.
5. ADD 800.0 lb TO TOTAL WEIGHT FOR ULTRA LOW NOISE OPTION.

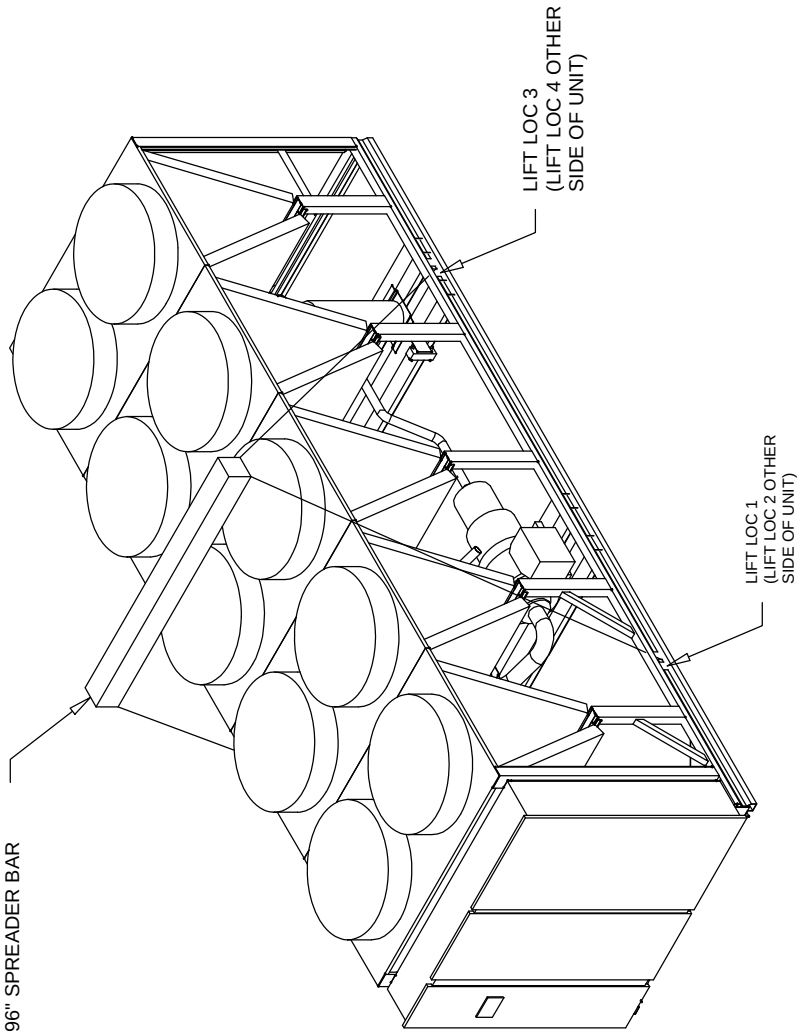

WARNING
LIFTING AND MOVING INSTRUCTIONS!
Use the spreader bar as shown in diagram. Refer to installation instructions located inside control panel for further rigging information.

Other lifting arrangements could result in death, serious injury or equipment damage.

Weight, Clearance & Rigging Diagram - Air-Cooled Stealth (TM)
Item: A1 Qty: 1 Tag(s): 150T RTAE

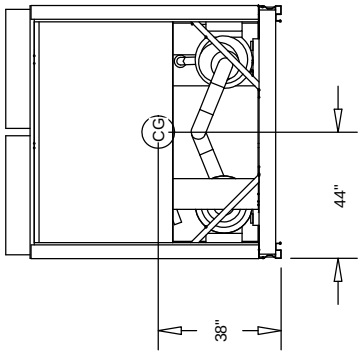

END VIEW (NON CONTROL PANEL)

CENTER OF GRAVITY

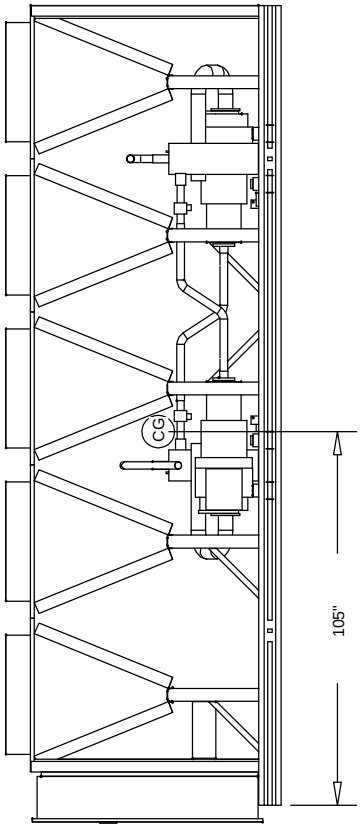

RIGHT SIDE VIEW

Accessory - Air-Cooled Stealth (TM)
Item: A1 Qty: 1 Tag(s): 150T RTAE

CUSTOMER WIRE SELECTION TABLE	
POWER WIRE CONNECTION TO CIRCUIT BREAKER	CIR 1 & 2 (SINGLE POINT POWER)
LUG WIRE SIZE RANGE (PER PHASE)	(2) MAX CONDUCTORS PER PHASE 4/0 AWG - 500MCM
SHORT CIRCUIT RATING	65kA

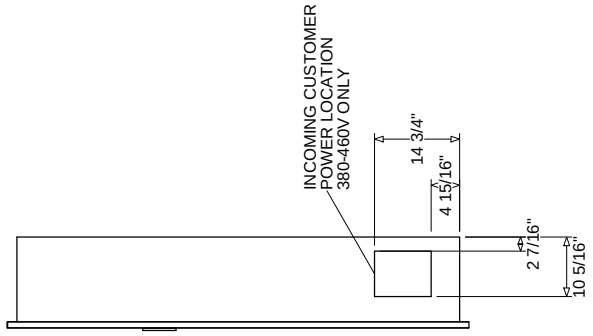

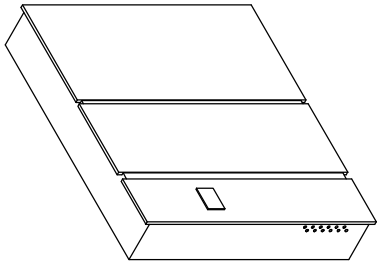

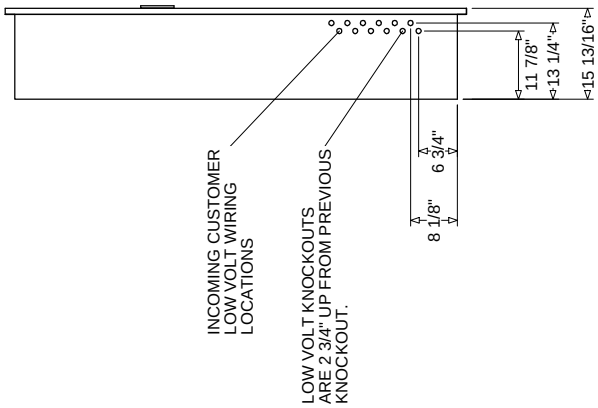

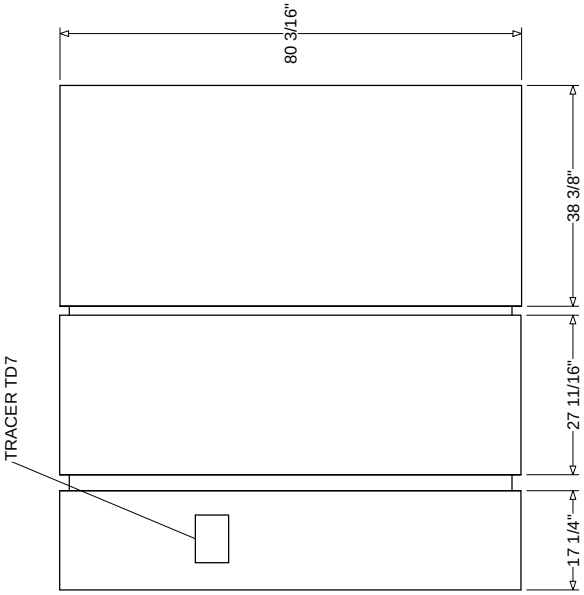

Accessory - Air-Cooled Stealth (TM)
Item: A1 Qty: 1 Tag(s): 150T RTAE

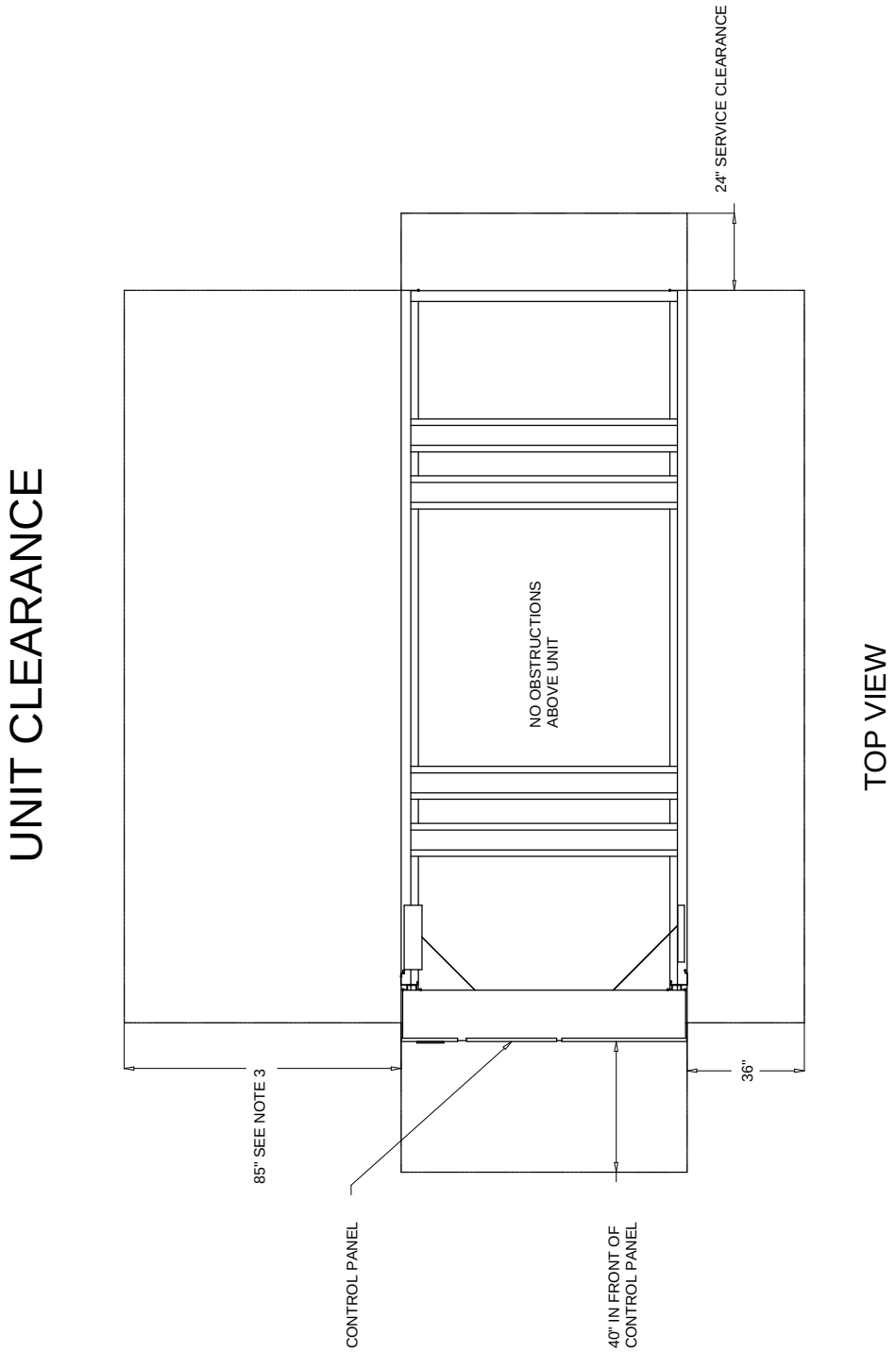

NOTES:
1. AREA ABOVE UNIT REQUIRED FOR OPERATION, MAINTENANCE, ACCESS PANEL AND AIR FLOW. NO OBSTRUCTIONS ABOVE UNIT.
2. FOR OBSTRUCTIONS OR MULTIPLE UNITS, REFER TO THE CLOSE SPACING BULLETIN.
3. CLEARANCE OF 85" ON THE SIDE OF THE UNIT IS REQUIRED FOR COIL REPLACEMENT. PREFERRED SIDE FOR COIL REPLACEMENT IS SHOWN (LEFT SIDE OF UNIT, AS FACING CONTROL PANEL), HOWEVER EITHER SIDE IS ACCEPTABLE.

Accessory - Air-Cooled Stealth (TM)
Item: A1 Qty: 1 Tag(s): 150T RTAE

MOUNTING LOCATIONS AND POINT LOAD WEIGHTS

POINT 1	POINT 2	POINT 3	POINT 4	POINT 5	POINT 6	POINT 7	POINT 8	POINT 9	POINT 10	POINT 11	POINT 12
1452.3 lb	1542.7 lb	1375.7 lb	1469.3 lb	1487.4 lb	1399.7 lb	1489.9 lb	1262.0 lb	N/A	N/A	N/A	N/A

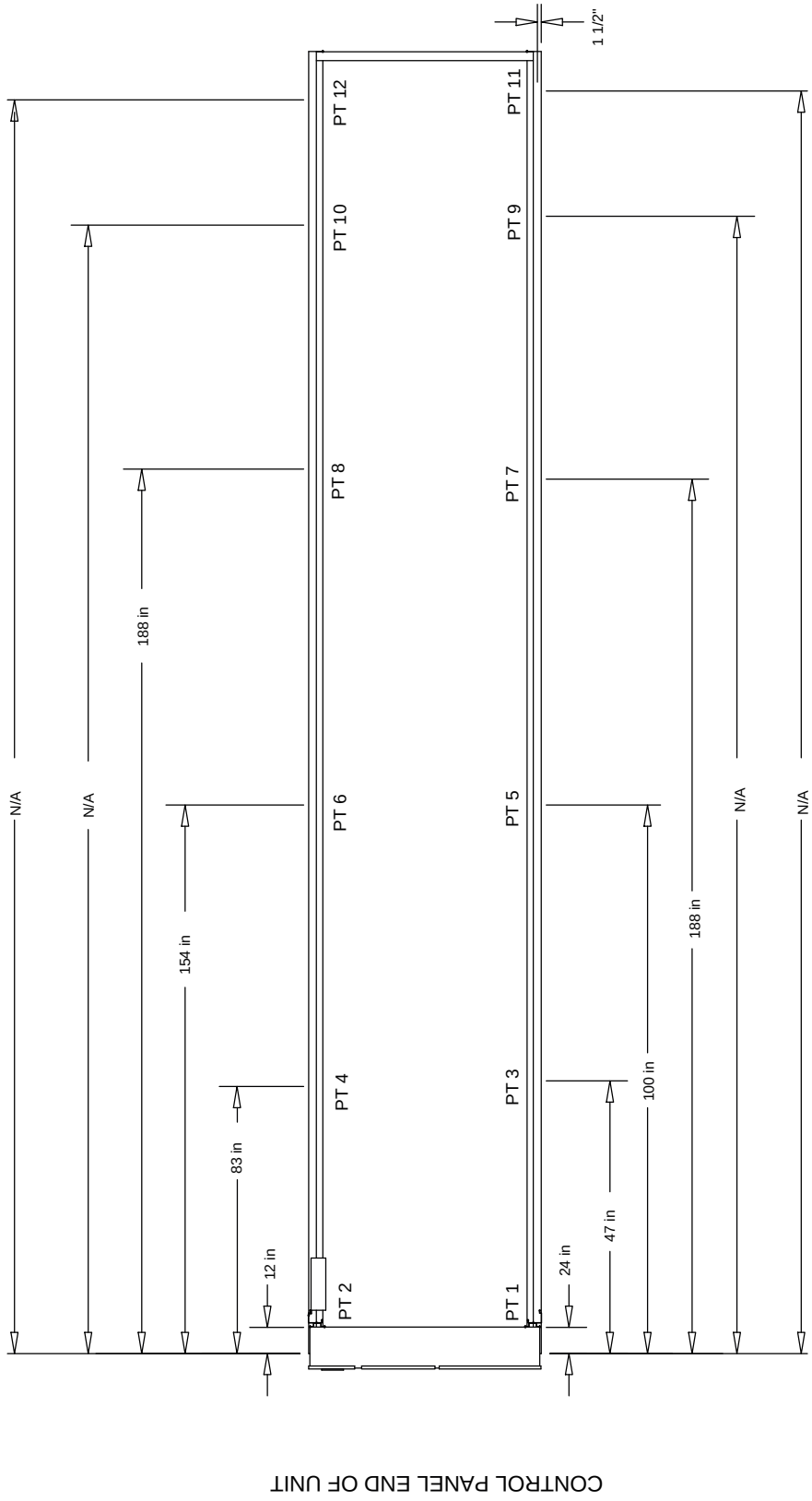

NOTE:
1. ISOLATOR LOCATIONS ARE DIMENSIONED FROM END OF UNIT BASE.
2. WEIGHTS INCLUDES LOUVER PANELS AND FACTORY OIL AND REFRIGERANT CHARGE.
3. DRAWING IS NOT TOO SCALE. DRAWING IS A REPRESENTATION OF UNIT BASE FOR ALL SIZE UNITS.
4. ADD 800.0 lb TO TOTAL WIEGHT FOR UNITS WITH ULTRA LOW NOISE OPTION.

Accessory - Air-Cooled Stealth (TM)
Item: A1 Qty: 1 Tag(s): 150T RTAE

NEOPRENE ISOLATOR DIMENSIONS

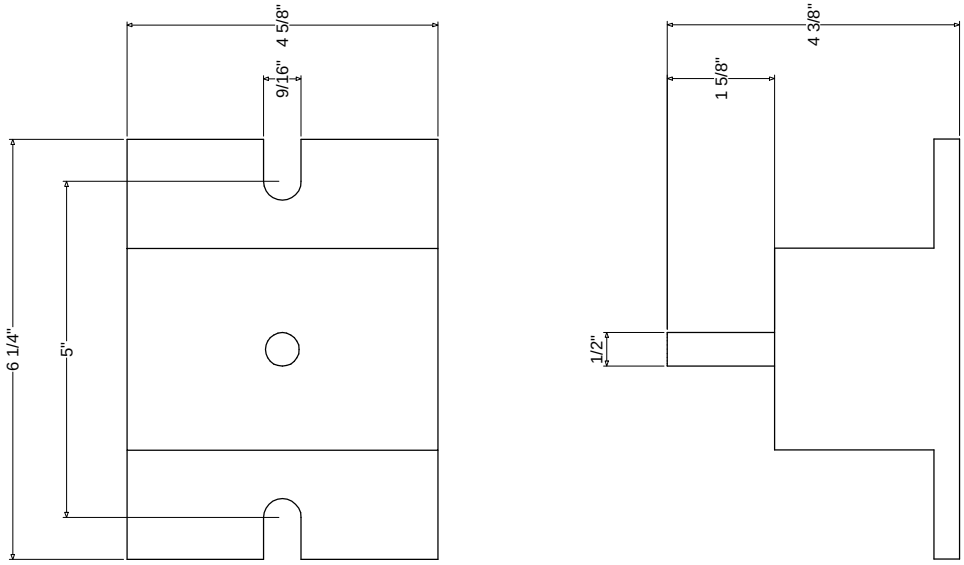

POINT LOCATIONS 1,2,7 & 8
(4X) RDP4-WR BRICK RED
MAX LOAD 2250.0 lb

POIN LOCATIONS 3, 4, 5 & 6
(4X) RDP4-WR LIME
MAX LOAD 3000.0 lb

Field Wiring - Air-Cooled Stealth (TM)

Item: A1 Qty: 1 Tag(s): 150T RTAE

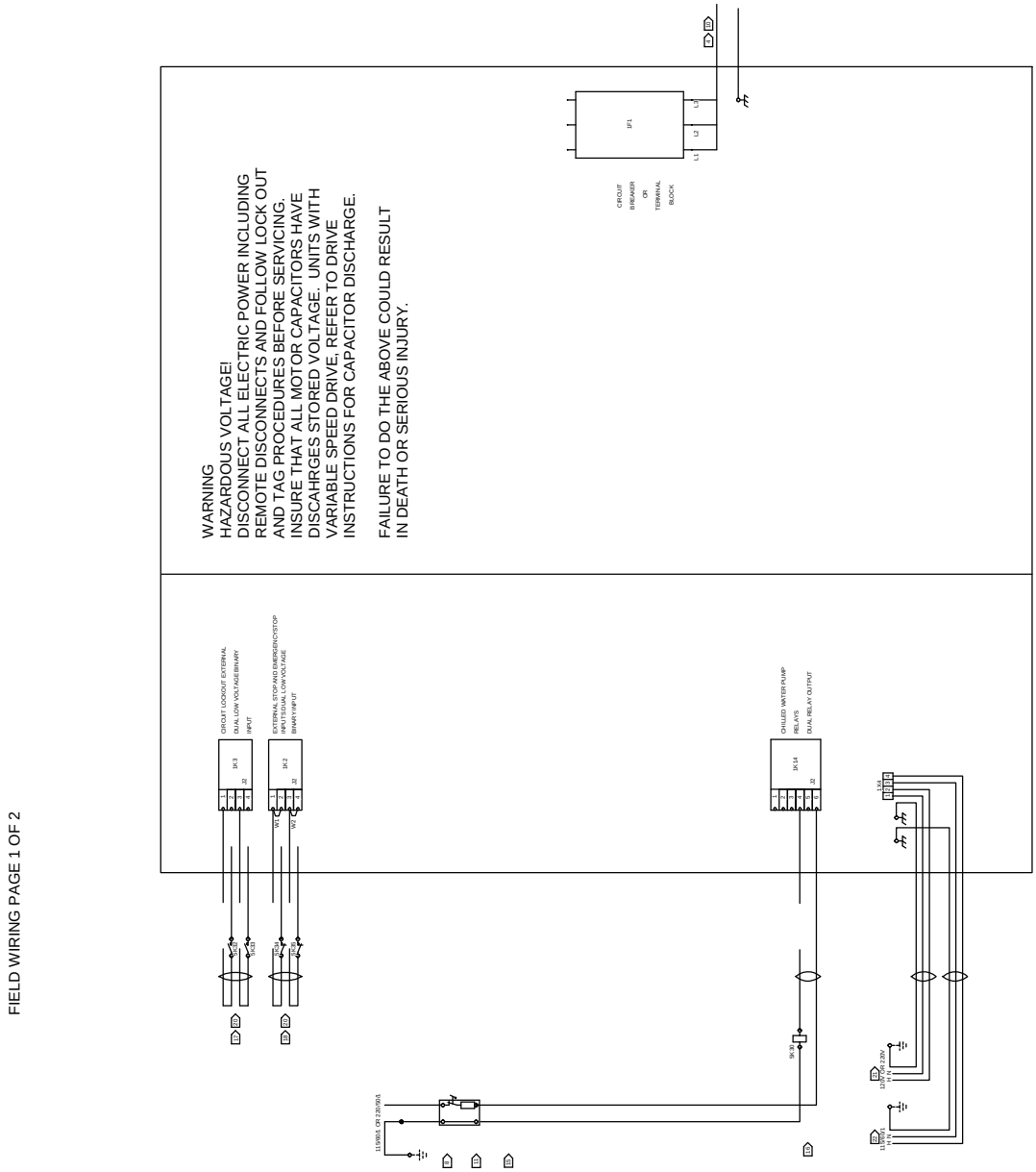

FIELD WIRING PAGE 1 OF 2

Field Wiring - Air-Cooled Stealth (TM)
Item: A1 Qty: 1 Tag(s): 150T RTAE

FIELD WIRING PAGE 2 OF 2

GENERAL NOTES

1. CAUTION-DO NOT ENERGIZE THE UNIT UNTIL CHECK OUT AND STARTUP PROCEDURES HAVE BEEN COMPLETED.

2. ALL MOTORS ARE PROTECTED FROM PRIMARY SINGLE PHASE FAILURES.

3. CAUTION-TRANE PUMP CONTROL MUST BE USED TO PROVIDE PUMP CONTROL. EVAPORATOR CHILLED WATER PUMP MUST BE CONTROLLED BY THE CHILLER OUTPUT. FAILURE TO COMPLY WITH THIS REQUIREMENT MAY RESULT IN DAMAGE OT THE UNIT.

4 SINGLE SOURCE POWER IS PROVIDED AS STANDARD ON THESE PRODUCTS, FIELD CONNECTIONS ARE MADE TO 1F1.

WIRING REQUIREMENTS

5. RECOMMENDED FIELD WIRING CONNECTIONS ARE SHOWN BY DASHED LINES

6. DO NOT RUN LOW VOLTAGE CONTROL WIRING (30 VOLTS OR LESS) IN CONDUIT WITH 110 VOLT OR HIGHER WIRING. DO NOT EXCEED THE FOLLOWING MAXIMUM RUN LENGTH FOR A GIVEN SIZE: 14 AWG, 5000 FT; 16 AWG, 2000 FT; 18 AWG, 1000 FT.

7 SHIELDED TWISTED PAIR LEADS ARE REQUIRED FOR CONNECTIONS TO THE COMMUNICATIONS INTERFACE MODULE (1K6). THE SHIELD SHOULD BE GROUNDED AT THE RTAE CONTROL PANEL END.

8 CUSTOMER SUPPLIED POWER 115/60/1PH OR 220/50/1PH TO POWER RELAYS. MAX. FUSE SIZE IS 20 AMPS. GROUND ALL CUSTOMER SUPPLIED POWER SUPPLIES AS REQUIRED BY APPLICABLE CODES. GREEN GROUND SCREWS ARE PROVIDED IN UNIT CONTROL PANEL.

9 WIRED TO NEXT UNIT. 22 AWG SHIELDED COMMUNICATION WIRE EQUIVALENT TO HELIX LF22P0014216 RECOMMENDED. THE SUM TOTAL OF ALL INTERCONNECTED CABLE SEGMENTS NOT TO EXCEED 4500 FT. CONNECTION TOPOLOGY SHOULD BE DAISY CHAIN. REFER TO BUILDING AUTOMATION SYSTEM (BAS) COMMUNICATION INSTALLATION LITERATURE FOR END OF LINE TERMINATION RESISTOR REQUIREMENTS.

11 ALL FIELD WIRING MUST BE IN ACCORDANCE WITH NATIONAL ELECTRIC CODE AND LOCAL REQUIREMENTS.
CONTACT RATINGS AND REQUIREMENTS

CONTACT RATINGS AND REQUIREMENTS

15 ALL CUSTOMER CONTROL CIRCUIT WIRING MUST BE COPPER CONDUCTORS ONLY AND HAVE A MINIMUM INSULATION RATING OF 300 VOLTS. EXCEPT AS NOTED, ALL CUSTOMER WIRING CONNECTIONS ARE MADE TO CIRCUIT BOARD MOUNTED BOX LUGS WITH A WIRE RANGE OF 14 TO 18 AWG OR DIN RAIL MOUNTED SPRING FORCE TERMINALS.

16 UNIT PROVIDED DRY CONTACTS FOR THE CONDENSER/CHILLED WATER PUMP CONTROL. RELAY CONTACT RATINGS AT 120VAC: 7.2 AMPS RESISTIVE, 2.88 AMPS PILOT DUTY, OR 1/3 HP, 7.2 FLA. CONTACTS ARE RATED FOR 5 AMPS GENERAL PURPOSE DUTY 240 VOLTS.

17 CUSTOMER SUPPLIED CONTACTS FOR ALL LOW VOLTAGE CONNECTIONS MUST BE COMPATABLE WITH DRY CIRCUIT 24 VOLTS DC FOR A 12 mA RESISTIVE LOAD. SILVER OR GOLD PLATED CONTACTS RECOMMENDED.

18 THE CONTACTS FOR AUTO STOP AND EMERGENCY STOP SWITCHES ARE JUMPERED AT THE FACTORY BY JUMPERS 1W1 & 1W2 TO ENABLE UNIT OPERATION. IF REMOTE CONTROL IS DESIRED, REMOVE THE JUMPERS AND CONNECT TO THE DESIRED CONTROL CIRCUIT.

19. SOLID OVALS REPRESENT MAX NUMBER OF CONDUITS AND/OR CABLE GLANDS USED.

20 CONNECTIONS ARE INTENDED FOR CLASS 2 ONLY.

21 CIRCUIT 3 REQUIRES 15A PROTECTION AT 120V..

22 CIRCUIT 4 REQUIRES 15A PROTECTION.