CITY OF LYNCHBURG

PUBLIC SAFETY BUILDING
LOBBY HARDENING
LYNCHBURG, VIRGINIA

CITY PROJECT NO. BM172

FOR CONSTRUCTION

MAY 10, 2016

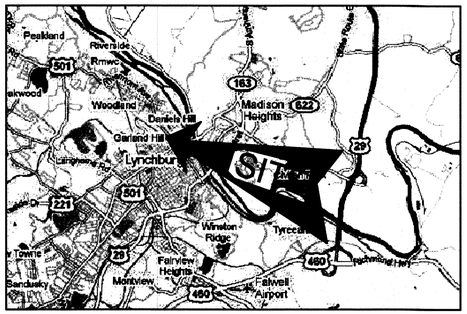

NORTH

VICINITY MAP

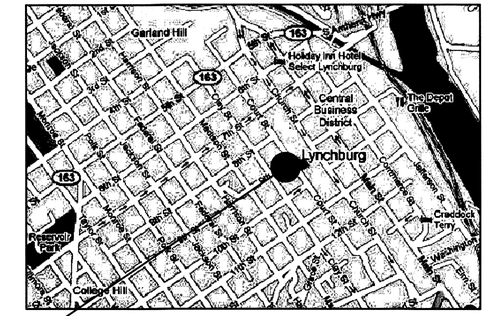

BUILDING LOCATION

PROJECT LOCATION MAP

NORTH

GENERAL NOTES:

1. THESE DRAWINGS ARE SCHEMATIC IN NATURE AND ARE NOT INTENDED FOR USE AS FABRICATION DRAWINGS. THESE DRAWINGS INDICATE THE GENERAL AND APPROXIMATE SIZE AND LOCATION OF MATERIAL. FIELD VERIFY ALL DIMENSIONS AND LOCATIONS PRIOR TO BEGINNING WORK. ALL UTILITIES NOTED ON PLANS ARE APPROXIMATE AND CONTRACTOR SHALL FIELD VERIFY LOCATION.
2. ALL WORK SHALL BE INSTALLED IN ACCORDANCE WITH APPLICABLE CODES AND REGULATIONS, INCLUDING, BUT NOT LIMITED TO, THE 2012 VIRGINIA UNIFORM STATEWIDE BUILDING CODE (JULY 14, 2014) AND ASSOCIATED CODES OF REFERENCE. REFER TO APPLICABLE CODES LIST THIS DRAWING.
3. CONTRACTOR SHALL OBTAIN ALL BUILDING AND TRADE PERMITS FOR CONSTRUCTION; HOWEVER, THE CITY OF LYNCHBURG SHALL WAIVE ALL FEES REQUIRED FOR PERMITS.
4. ALL MATERIAL SHALL BE NEW UNLESS OTHERWISE NOTED. MATERIALS ARE BASED ON THE INDICATED MANUFACTURERS/MODELS AND ARE INTENDED ONLY TO SHOW THE GENERAL SIZE, CONFIGURATION, LOCATION, CONNECTIONS, AND SUPPORT FOR INDICATED MATERIAL WITH RELATION TO OTHER BUILDING SYSTEMS. MATERIAL BY ANY MANUFACTURER THAT MEETS THE SCHEDULED CRITERIA IS ACCEPTABLE. CONTRACTOR SHALL BE RESPONSIBLE FOR COORDINATING ACTUAL INSTALLED MATERIAL AND ASSOCIATED CHANGES.
5. CONTRACTOR SHALL COORDINATE THE WORK WITH EXISTING CONDITIONS, INCLUDING BEAMS, COLUMNS, SITE FEATURES, AND OTHER OBSTRUCTIONS, WHETHER OR NOT SUCH IS SHOWN ON DRAWINGS.
6. CONTRACTOR SHALL COORDINATE THE WORK BETWEEN ALL TRADES. MATERIAL LOCATIONS SHALL BE COORDINATED BETWEEN ARCHITECTURAL, MECHANICAL, PLUMBING, ELECTRICAL, AND DEMOLITION PLANS TO AVOID CONFLICTS.
7. EXISTING MATERIAL TO BE REMOVED SHALL BE REMOVED CAREFULLY TO AVOID DAMAGING MATERIAL TO REMAIN. THE CONTRACTOR SHALL BE RESPONSIBLE FOR DAMAGE THAT OCCURS TO EXISTING MATERIAL TO REMAIN OR TO BE RELOCATED DURING DEMOLITION AND CONSTRUCTION.
8. CONTRACTOR SHALL ADVISE THE A/E IMMEDIATELY OF DISCREPANCIES FOUND ON THE DRAWINGS, IN THE SPECIFICATIONS, OR BETWEEN THE TWO. MINOR DEVIATIONS FROM THE PLANS MAY BE MADE TO AVOID MINOR CONFLICTS. WHERE MAJOR CONFLICTS ARE ENCOUNTERED, THE AFFECTED WORK SHALL NOT BE INSTALLED UNTIL THE CONFLICT HAS BEEN RESOLVED. NEITHER THE A/E NOR THE OWNER SHALL BE RESPONSIBLE FOR CONSEQUENCES OF PROCEEDING WITH WORK BASED ON CONTRACTOR INTERPRETATION OR ON DIRECTION FROM OTHER PARTIES, INCLUDING THE OWNER AND INSPECTORS.
9. ALL MATERIAL SHALL BE INSTALLED ACCORDING TO MANUFACTURER'S WRITTEN INSTALLATION INSTRUCTIONS, MAINTAINING ALL REQUIRED CLEARANCES AND WITH ALL COMPONENTS ACCESSIBLE AND SERVICEABLE.
10. CONTRACTOR SHALL PROVIDE MATERIAL DATA SUBMITTALS FOR ALL NEW MATERIAL. REFER TO INDIVIDUAL SHEETS FOR ADDITIONAL SUBMITTAL REQUIREMENTS. A LIST OF SUBMITTALS IS PROVIDED ON THIS DRAWING.
11. CONTRACTOR SHALL BE RESPONSIBLE FOR ASSEMBLING OPERATION AND MAINTENANCE MANUALS CONTAINING ALL MATERIAL SUBMITTALS, INSTALLATION AND OPERATING INSTRUCTIONS, AND WARRANTY INFORMATION. THREE (3) HARD COPIES AND TWO (2) ELECTRONIC (PDF) COPIES OF O&M MANUALS SHALL BE SUBMITTED TO THE OWNER AT THE TIME OF SUBSTANTIAL COMPLETION.
12. THE CONTRACTOR SHALL BE RESPONSIBLE FOR MAINTAINING A SET OF AS-BUILT DRAWINGS ON SITE WHICH INDICATE IN RED ALL DEVIATIONS FROM ORIGINAL CONSTRUCTION DOCUMENTS, INCLUDING APPROVED CONSTRUCTION CHANGE ORDERS. AS-BUILT DRAWINGS SHALL BE CLEARLY LEGIBLE AND COMPLETE. AS-BUILT DRAWINGS SHALL BE SUBMITTED TO THE OWNER AT THE TIME OF SUBSTANTIAL COMPLETION.
13. CONTRACTOR SHALL KEEP PUBLIC AREAS FREE OF TRASH AND CONSTRUCTION DEBRIS AND CLEAN ENTIRE WORK AREA ON A DAILY BASIS.
14. TEMPORARY POWER AND WATER SERVICE ARE AVAILABLE ON SITE FOR THE CONTRACTOR'S USE. CONTRACTOR SHALL COORDINATE ACCESS WITH OWNER AND SHALL PROVIDE ANY REQUIRED TEMPORARY CONNECTIONS AND EXTENSIONS.
15. CONTRACTOR'S PERSONNEL MAY USE THE TOILET FACILITIES IN THE BUILDING FOR THE DURATION OF THE PROJECT.
16. CONTRACTOR SHALL VISIT THE SITE TO BECOME FAMILIAR WITH THE SCOPE OF WORK AND TO VERIFY EXISTING CONDITIONS PRIOR TO BIDDING THIS PROJECT. ANY DISCREPANCIES OR AMBIGUOUS ITEMS MUST BE REPORTED TO THE A/E AND THE OWNER FOR CLARIFICATION PRIOR TO BIDDING.
17. CONTRACTOR IS TYPICALLY PERMITTED TO WORK BETWEEN 7:00 AM AND 6:00 PM MONDAY THRU FRIDAY. WORK OUTSIDE THESE HOURS SHALL BE COORDINATED WITH OWNER'S PROJECT MANAGER DURING THE PRE-BID MEETING. CONTRACTOR SHALL COORDINATE CONSTRUCTION ACTIVITIES WITH OWNER AND BUILDING TENANTS FOR SPECIAL EVENTS.
18. CONTRACTOR SHALL PROVIDE A DUST-PROOF BARRIER BETWEEN THE CONSTRUCTION ZONE AND OCCUPIED PORTIONS OF THE BUILDING. CONTRACTOR SHALL FILTER EXISTING HVAC GRILLES IN WORK AREA TO MITIGATE SPREAD OF DUST INTO OCCUPIED AREAS OF THE BUILDING.
19. CONTRACTOR SHALL PROTECT THE BUILDING, ADJACENT FEATURES, ROADWAYS, WALKWAYS, SITE IMPROVEMENTS, EXTERIOR PLANTINGS, LANDSCAPING, ETC. AS REQUIRED FROM DAMAGE AND CORRECT DAMAGE RESULTING FROM CONSTRUCTION ACTIVITIES TO THE SATISFACTION OF THE OWNER.
20. CONTRACTOR SHALL COLLECT DEMOLISHED MATERIALS AND PLACE IN APPROPRIATE DISPOSAL CONTAINERS. DEMOLISHED MATERIALS SHALL BE PROMPTLY REMOVED FROM THE OWNER'S PROPERTY AND DISPOSED OF LEGALLY.
21. CONTRACTOR SHALL COORDINATE MATERIAL STORAGE AND DUMPSTER LOCATION WITH OWNER DURING CONSTRUCTION.
22. CONTRACTOR SHALL NOTIFY OWNER OF ANY INTERRUPTION OF UTILITIES INCLUDING BUT NOT LIMITED TO POWER, WATER, COMMUNICATIONS, ETC AND COORDINATE OUTAGE WITH OWNER AND ALL BUILDING TENANTS.
23. OWNER WILL REMOVE FURNISHINGS FROM WORK AREA IN ADVANCE OF CONSTRUCTION.
24. CONTRACTOR PARKING, MATERIAL STORAGE, AND DEBRIS REMOVAL WILL BE DISCUSSED DURING THE PRE-BID MEETING.
25. CONTRACTOR SHALL PROVIDE BACKGROUND CHECKS FOR ALL PROPOSED CONSTRUCTION PERSONNEL TO THE CITY OF LYNCHBURG FOR REVIEW AND APPROVAL PRIOR TO START OF CONSTRUCTION.
26. WORK SHALL BE PERFORMED TO MAINTAIN OPERATION OF THE LOBBY AND SERVICE COUNTER TO THE GREATEST EXTENT FEASIBLE. COORDINATE ANY REQUIRED SHUTDOWNS WITH THE OWNER'S PROJECT MANAGER WITH A MINIMUM OF 72 HOURS ADVANCED NOTICE. REFER TO GENERAL NOTES ON DRAWING A2 FOR ADDITIONAL INFORMATION.
27. DEFINITIONS:

    FURNISH: SUPPLY AND DELIVER TO PROJECT SITE FOR INSTALLATION BY OTHERS.

    INSTALL: INSTALL ITEMS FURNISHED BY OTHERS, INCLUDING UNLOADING, TEMPORARILY STORING, UNPACKING, AND ASSEMBLY.

    PROVIDE: FURNISH AND INSTALL, COMPLETE AND READY FOR THE INTENDED USE.

    REMOVE: DETACH ITEMS FROM EXISTING CONSTRUCTION AND LEGALLY DISPOSE OF THEM OFF-SITE UNLESS INDICATED TO BE REMOVED AND SALVAGED OR REMOVED AND REINSTALLED.

    REMOVE AND REINSTALL: DETACH ITEMS FROM EXISTING CONSTRUCTION, PREPARE FOR REUSE, AND REINSTALL WHERE INDICATED.

    REMOVE AND SALVAGE: CAREFULLY DETACH FROM EXISTING CONSTRUCTION, IN A MANNER TO PREVENT DAMAGE, AND DELIVER TO OWNER.

DRAWING LIST:

DRAWING NO	TITLE
T1	TITLE SHEET
D1	PARTIAL BASEMENT DEMOLITION PLAN
A1	LEGEND
A2	PARTIAL BASEMENT FLOOR PLAN
A3	SECTIONS AND DETAILS
A4	SPECIFICATIONS

SUBMITTALS LIST:

SUBMITTALS LIST TO BE VERIFIED BY CONTRACTOR WITH REQUIREMENTS THROUGHOUT THE CONSTRUCTION DOCUMENTS:

ADMINISTRATIVE
1. WORK SCHEDULE
2. SCHEDULE OF VALUES

ARCHITECTURAL
1. PAINT PRODUCTS
2. STOREFRONT SYSTEM
3. WOOD DOOR AND FRAME
4. TRANSACTION DOOR AND FRAME
5. TRANSACTION WINDOW
6. BALLISTIC RATED PANELS
7. SEALANTS
8. DOOR HARDWARE
9. METAL FRAMING
10. GYPSUM BOARD
11. RESILIENT BASE

GENERAL INFORMATION:

PROJECT INFORMATION:	
AGENCY:	CITY OF LYNCHBURG
PROJECT TITLE:	PUBLIC SAFETY BUILDING LOBBY HARDENING
INSTITUTION:	LYNCHBURG POLICE DEPARTMENT
ADDRESS:	905 COURT STREET, LYNCHBURG, VIRGINIA 24504
BUILDING INFORMATION:	
WORK PERMITTED:	INTERIOR RENOVATIONS TO APPROXIMATELY 170 GROSS SQUARE FEET OF EXISTING BUILDING
PURPOSE/OCCUPANCY:	OFFICE OCCUPANCY
USE GROUP CLASSIFICATION:	(B) BUSINESS OCCUPANCY
APPLICABLE CODES & STANDARDS:	
BUILDING CODES:	2012 VIRGINIA UNIFORM STATEWIDE BUILDING CODE - VUSBC (EFFECTIVE JULY 14, 2014) NATIONAL ELECTRICAL CODE - NFPA-70 (2011)

ASBESTOS DISCLOSURE STATEMENT:

AN ASBESTOS INSPECTION WAS NOT PERFORMED. THE CONTRACTOR SHALL NOTIFY THE CITY'S PROJECT MANAGER OF ANY SUSPECTED MATERIALS FOR REMOVAL BY THE CITY OF LYNCHBURG.

LEAD PAINT DISCLOSURE STATEMENT:

A LEAD-BASED PAINT INSPECTION WAS NOT PERFORMED. THE CONTRACTOR SHALL NOTIFY THE CITY'S PROJECT MANAGER OF ANY SUSPECTED MATERIALS FOR REMOVAL BY THE CITY OF LYNCHBURG.

DISCLAIMER STATEMENT:

VIRGINIA A&E ASSUMES NO RESPONSIBILITY FOR THE ADEQUACY OR ACCURACY OF THE ASBESTOS AND LEAD BASED PAINT INFORMATION PROVIDED ABOVE BY THE OWNER. THE CONTRACTOR SHALL ADDRESS ANY RELATED QUESTIONS TO THE OWNER'S PROJECT MANAGER.

VIRGINIA A&E, PLLC
1115 VISTA PARK DRIVE
FOREST, VA 24551
PHONE: (434) 316-6001

Virginia A&E

VAE PROJECT NO: 16009

COMMONWEALTH OF VIRGINIA
STEPHEN D. HERRING
Lic. No. 015253
5/10/2016
ARCHITECT

Job No.: 16009

Drawing No.:

T1

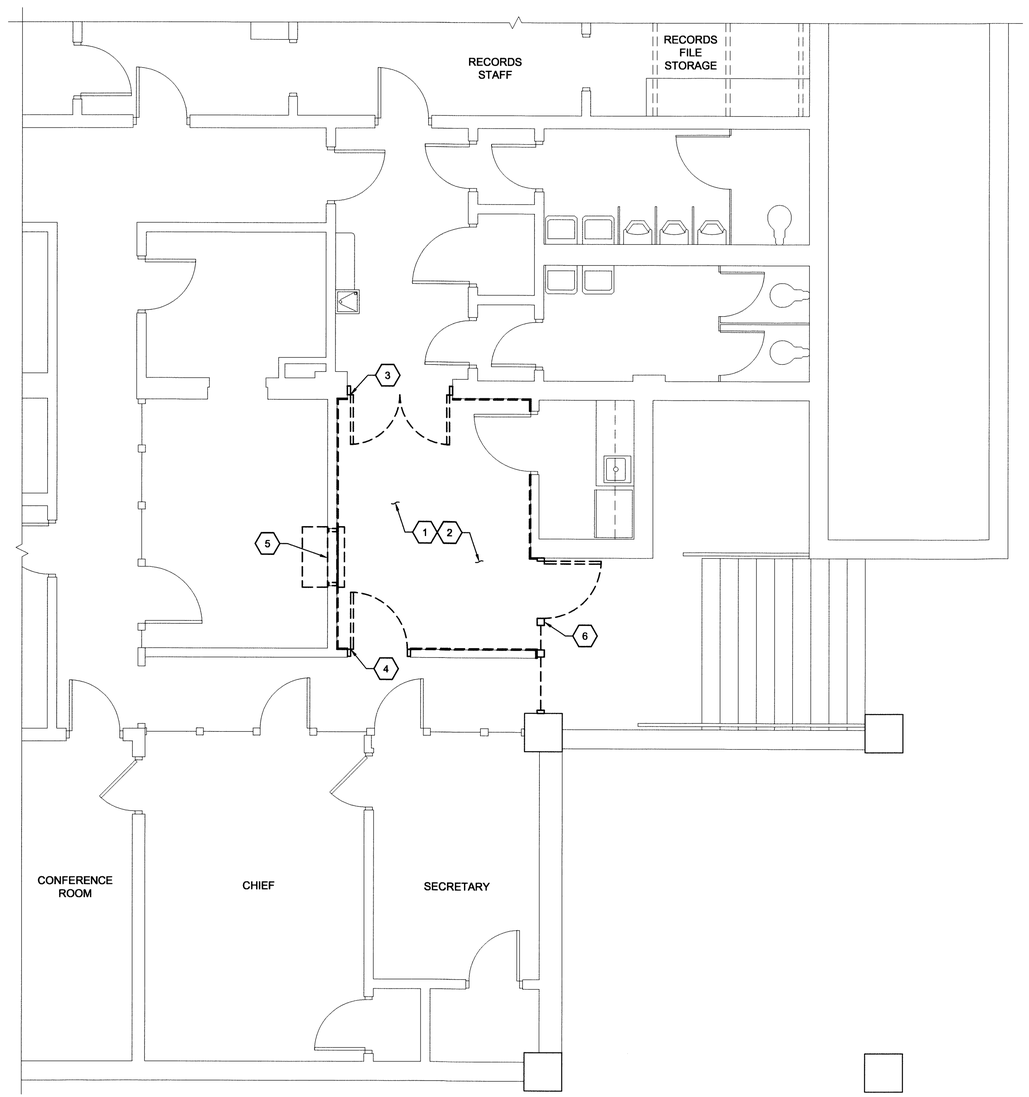

NORTH

PARTIAL GROUND FLOOR DEMOLITION PLAN
SCALE: 1/4"=1'-0"

0 1' 5' 10'

DEMOLITION SYMBOLS LEGEND:

XX DEMOLITION NOTE

LIMIT OF DEMOLITION

GENERAL NOTES:

1. REFER TO ARCHITECTURAL DRAWINGS FOR ADDITIONAL DEMOLITION AND ALTERATION NOTES.
2. CUTTING AND PATCHING:
   A. ANY EXISTING CONSTRUCTION THAT IS TO BE REMOVED SHALL BE REMOVED CAREFULLY SO AS NOT TO DAMAGE ANY EXISTING CONSTRUCTION THAT IS TO REMAIN. WALLS AND CEILINGS ARE TO BE PATCHED (IN A RECTANGULAR PATTERN) TO MATCH EXISTING CONDITIONS AND MADE READY TO RECEIVE ANY NEW FINISHES WHERE APPLICABLE.

   B. WHERE EXISTING CEILING OR WALL FINISHES ARE TO BE REMOVED AND REPLACED WITH NEW FINISHES, SURFACES SHALL BE STRIPPED CLEAN OF ALL EXISTING FINISHES AND MADE READY TO RECEIVE NEW FINISHES, UNLESS OTHERWISE NOTED.
3. PRIOR TO DEMOLITION, OWNER WILL REMOVE FURNISHINGS AND DISCONNECT AND REMOVE SECURITY CAMERAS, MICROPHONES, AND OTHER AUDIO-VISUAL EQUIPMENT FROM THE LOBBY.
4. THE CONTRACTOR SHALL PROTECT EXISTING FLOOR FROM DAMAGE FOR THE DURATION OF THE WORK AND REPLACE ANY DAMAGED FLOOR TO MATCH EXISTING.

XX DEMOLITION NOTES:

1. REMOVE CEILING PANELS AND PERIMETER TRACK AS REQUIRED TO COMPLETELY REMOVE EXISTING WALL FINISH. MAINTAIN LIGHTING AND HVAC SYSTEMS. PROVIDE TEMPORARY SUPPORTS AS REQUIRED.
2. REMOVE FINISH WALL MATERIAL AND BASE COMPLETELY TO FRAMING OR SUBSTRATE.
3. REMOVE DOUBLE DOORS, TRANSOM PANEL, AND FRAME COMPLETELY. RETAIN CONDUIT AND WIRING FOR ELECTRONIC LOCKING SYSTEM.
4. REMOVE DOOR AND FRAME COMPLETELY. RETAIN KEY PAD AND ELECTRONIC LOCKING SYSTEM. MAINTAIN CONDUIT AND WIRING FOR REUSE.
5. REMOVE TRANSACTION WINDOW, COUNTERTOP, AND FRAME COMPLETELY.
6. REMOVE STOREFRONT SYSTEM COMPLETELY. RETAIN ELECTRONIC LOCKING SYSTEM AND TURN OVER TO OWNER. MAINTAIN CONDUIT AND WIRING FOR REUSE. REMOVE AND REINSTALL CORNER GUARDS ON BOTH SIDES OF WALL AT INTERSECTION WITH STOREFRONT SYSTEM.

NO.	BY	REVISIONS	DATE

COMMONWEALTH OF VIRGINIA
STEPHEN D. HERRING
Lic. No. 015253
5/10/2016
ARCHITECT

Virginia A&E
VIRGINIA A&E, PLLC
1115 VISTA PARK DRIVE
FOREST, VIRGINIA 24551
PHONE: (434) 316-6001

CITY OF LYNCHBURG
PUBLIC SAFETY BUILDING
LOBBY HARDENING
CITY PROJECT NO. BM172
LYNCHBURG, VIRGINIA

PARTIAL GROUND FLOOR
DEMOLITION PLAN

PROJECT NO: 16009
DATE: 10 MAY 16

Full Scale Verification
0" 1"

Drawing No.:
D1

LEGEND

MATERIAL

- CAST-IN-PLACE CONCRETE
- WALKPADS, LIGHTWEIGHT CONCRETE, GROUT
- CONCRETE MASONRY
- BRICK MASONRY, CHEMICALLY RESISTANT MEMBRANE
- STEEL
- FINISH WOOD
- PLYWOOD
- RIGID INSULATION
- GYPSUM WALL BOARD
- BATT INSULATION
- EXTENT OF (E)CONSTRUCTION TO BE REPLACED
- SEALANT
- WOOD BLOCKING
- CONTINUOUS WOOD, STUD

LINETYPES

- EXISTING CONSTRUCTION
- DEMOLITION
- NEW CONSTRUCTION
- LOC — LIMITS OF CONSTRUCTION
- MATCHLINE — MATCHLINE
- ℄ — CENTERLINE
- CONDITION ABOVE/BELOW
- F1 — RATED WALL TYPE 1
- F2 — RATED WALL TYPE 2
- F3 — RATED WALL TYPE 3
- F4 — RATED WALL TYPE 4

SYMBOLS

- A / AX AX — LETTER INDICATES DETAIL; DRAWING NUMBER WHERE DETAIL IS DRAWN; DRAWING NUMBER WHERE DETAIL IS TAKEN
- A / AX AX — LETTER INDICATES ENLARGED PLAN; DRAWING NUMBER WHERE ENLARGED PLAN IS DRAWN; DRAWING NUMBER WHERE ENLARGED PLAN IS TAKEN
- A / AX AX — LETTER INDICATES ELEVATION; DRAWING NUMBER WHERE ELEVATION IS DRAWN; DRAWING NUMBER WHERE ELEVATION IS TAKEN
- 1 / AX AX — NUMBER INDICATES SECTION; DRAWING NUMBER WHERE SECTION IS DRAWN; DRAWING NUMBER WHERE SECTION IS TAKEN
- 1 — REVISION TRIANGLE
- REVISION CLOUD
- 1 — INDICATES NUMBER OF REVISION, CORRESPONDS WITH REVISION NOTE
- LIMIT OF REMOVAL
- POINT OF EXISTING TO NEW
- 1 — DEMOLITION NOTE
- 1 — CONSTRUCTION NOTE
- NORTH — NORTH SYMBOL
- X — WINDOW TYPES
- X — WALL TYPES
- X — BUILDING/TOILET ACCESSORIES

ABBREVIATIONS

AFF	ABOVE FINISHED FLOOR
ACT	ACOUSTICAL TILE
ALT	ALTERNATE
ALUM	ALUMINUM
APPROX	APPROXIMATE
ARCH	ARCHITECTURAL
AVG	AVERAGE
BD	BOARD
BOT	BOTTOM
BLDG	BUILDING
CAB	CABINET
CS	CAST STONE
CF	CUBIC FOOT
℄	CENTERLINE
CLG	CEILING
CT	CERAMIC TILE
CLR	CLEAR
COL	COLUMN
CONC	CONCRETE
CMU	CONCRETE MASONRY UNIT
CONT	CONTINUOUS
CI	CUBIC INCH
CY	CUBIC YARD
DTL	DETAIL
DIAG	DIAGONAL
DIA, Ø	DIAMETER
DIM	DIMENSION
DS	DOWNSPOUT
DEPT	DEPARTMENT
DN	DOWN
DF	DRINKING FOUNTAIN
DWG	DRAWING
(E)	EXISTING
EA	EACH
ELEC	ELECTRIC
EWC	ELECTRIC WATER COOLER
EL	ELEVATION (ABOVE SEA LEVEL)
ELEV	ELEVATION (GRAPHIC)
EQ	EQUAL
EQUIP	EQUIPMENT
EJ	EXPANSION JOINT
EXT	EXTERIOR
FIN	FINISH
FF	FINISH FLOOR
FL	FLOOR
FD	FLOOR DRAIN
FRT	FIRE RETARDANT TREATED
FT	FOOT, FEET
GA	GAGE
GAL	GALLONS
GALV	GALVANIZED
GL	GLASS
GYP	GYPSUM
GWB	GYPSUM WALL BOARD
HDWD	HARDWOOD
HDWR	HARDWARE
HGT	HEIGHT
H	HIGH
HM	HOLLOW METAL
HORZ	HORIZONTAL
HR	HOUR(S)
IN	INCHES
INFO	INFORMATION
ID	INSIDE DIAMETER
INSUL	INSULATION
INT	INTERIOR
INV	INVERT
JT	JOINT
LAM	LAMINATED
LAV	LAVATORY
L	LENGTH
LF	LINEAR FEET
MATL	MATERIAL
MAX	MAXIMUM
MECH	MECHANICAL
MTL	METAL
MEZZ	MEZZANINE
MIN	MINIMUM
MISC	MISCELLANEOUS
MPI	MASTER PAINTERS INSTITUTE
MR	MOISTURE RESISTANT
MTG	MOUNTING HEIGHT
NOM	NOMINAL
N/A	NOT APPLICABLE
NIC	NOT IN CONTRACT
NTS	NOT TO SCALE
OC	ON CENTER
OPNG	OPENING
OH	OPPOSITE HAND
OZ	OUNCE
OD	OUTSIDE DIAMETER
PTD	PAINTED
PNL	PANEL
PART	PARTITION
PH	PHASE
PLCS	PLACES
PLAS	PLASTER
PL	PLATE
LBS	POUNDS
PSF	POUNDS PER SQUARE FOOT
PSI	POUNDS PER SQUARE INCH
R	RADIUS
R-	THERMAL RESISTANT RATING
REF	REFER
REINF	REINFORCING
REQD	REQUIRED
RD	ROOF DRAIN
RM	ROOM
SCH	SCHEDULE
SECT	SECTION
SHT	SHEET
SPEC	SPECIFICATION
SQ	SQUARE
SF	SQUARE FOOT, FEET
SS	STAINLESS STEEL
STD	STANDARD
STL	STEEL
STOR	STORAGE
TB	TACKBOARD
TEMP	TEMPERATURE
KIP FT	THOUSAND FOOT LBS
KIP	THOUSAND POUNDS
THRES	THRESHOLD
TLT	TOILET
T&G	TONGUE AND GROOVE
TYP	TYPICAL
UL	UNDERWRITERS LABORATORY
UON	UNLESS OTHERWISE NOTED
VAR	VARIABLE
VERT	VERTICAL
VOL	VOLUME
WC	WATER CLOSET
WGT	WEIGHT
WWF	WELDED WIRE FABRIC
W	WIDTH
W/	WITH
WO	WITHOUT
WD	WOOD
WP	WORK POINT
YD	YARD

NO.	BY	REVISIONS	DATE

COMMONWEALTH OF VIRGINIA
STEPHEN D. HERRING
Lic. No. 015253
5/10/2016
ARCHITECT

Virginia A&E
VIRGINIA A&E, PLLC
1115 VISTA PARK DRIVE
FOREST, VIRGINIA 24551
PHONE: (434) 316-6001

CITY OF LYNCHBURG
PUBLIC SAFETY BUILDING
LOBBY HARDENING
CITY PROJECT NO. BM172
LYNCHBURG, VIRGINIA

LEGEND AND SPECIFICATIONS

PROJECT NO: 16009
DATE: 10 MAY 16

Full Scale Verification
0" — 1"

Drawing No.:
A1

GENERAL NOTES:

1. ALL BULLET RESISTANT MATERIALS AND ASSEMBLIES SHALL MEET UL 752 LEVEL 3 REQUIREMENTS. INSTALL PER MANUFACTURER'S INSTRUCTIONS.
2. CONTRACTOR SHALL COORDINATE WITH OWNER TO MAINTAIN SECURITY OF LOBBY DURING THE WORK. COORDINATE WITH OWNER REGARDING SCHEDULE FOR REMOVING AND REPLACING STOREFRONT SYSTEM.
3. DO NOT PERFORM ANY DEMOLITION WORK UNTIL ALL SUBMITTALS HAVE BEEN APPROVED AND CONTRACTOR HAS ALL MATERIALS ON HAND. DEMOLITION MAY TAKE PLACE ONCE ALL MATERIALS AND LABOR ARE AVAILABLE TO IMMEDIATELY REPLACE WITH NEW SYSTEMS. COORDINATE SCHEDULE WITH OWNER'S PROJECT MANAGER.
4. SUPPLEMENT EXISTING ROUGH OPENING FRAMING AS REQUIRED TO SUPPORT NEW BALLISTIC RATED DOOR AND WINDOW ASSEMBLIES.

XX CONSTRUCTION NOTES:

1. PROVIDE BULLET RESISTANT FIBERGLASS WALL PANEL MATERIAL ON EXPOSED END OF WALL. REINSTALL CORNER GUARDS TO WRAP OUTSIDE CORNERS ON BOTH SIDES OF WALL.
2. PROVIDE BULLET RESISTANT STOREFRONT SYSTEM CONSISTING OF ENTRY DOOR, SIDELIGHTS, TRANSOMS, ASSOCIATED FRAMING, AND HARDWARE. PROVIDE SEALANT AROUND PERIMETER.
3. PROVIDE BULLET RESISTANT FIBERGLASS WALL PANELS ON ALL EXPOSED WALL SURFACES. CONTINUE TOP OF WALL PANELS TO BOTTOM OF FLOOR SLAB ABOVE.
4. PROVIDE METAL STUD WALL INFILL AND FINISH PER ENLARGED PLAN B ON DRAWING A3.
5. PROVIDE HEADER AND WALL FRAMING ABOVE DOOR OPENING. FINISHED WALL THICKNESS TO ALIGN WITH EXISTING WALL FINISHES ON EACH SIDE.
6. REINSTALL CEILING PERIMETER TRACK AND PANELS TO FIT TIGHTLY TO REFINISHED WALLS. REPLACE BROKEN OR DAMAGED TRACK AND TILES.
7. PROVIDE BULLET RESISTANT DOOR AND FRAME PER DETAILS ON DRAWING A3.
8. PROVIDE BULLET RESISTANT TRANSACTION WINDOW AND COUNTERTOP.
9. PROVIDE 8" X 30" WOOD WRITING SHELF. TOP OF SHELF TO BE AT 33" ABOVE FINISHED FLOOR.
10. PAINT ALL EXPOSED WALL SURFACES, SHOP PRIMED DOOR AND WINDOW FRAMES, AND PREVIOUSLY PAINTED FRAMES. PROVIDE PRIMER AND (2) FINISH COATS.
11. PROVIDE METAL CORNER BEAD AT EXPOSED GYPSUM WALL BOARD CORNERS ON DOOR HEAD AND JAMBS.

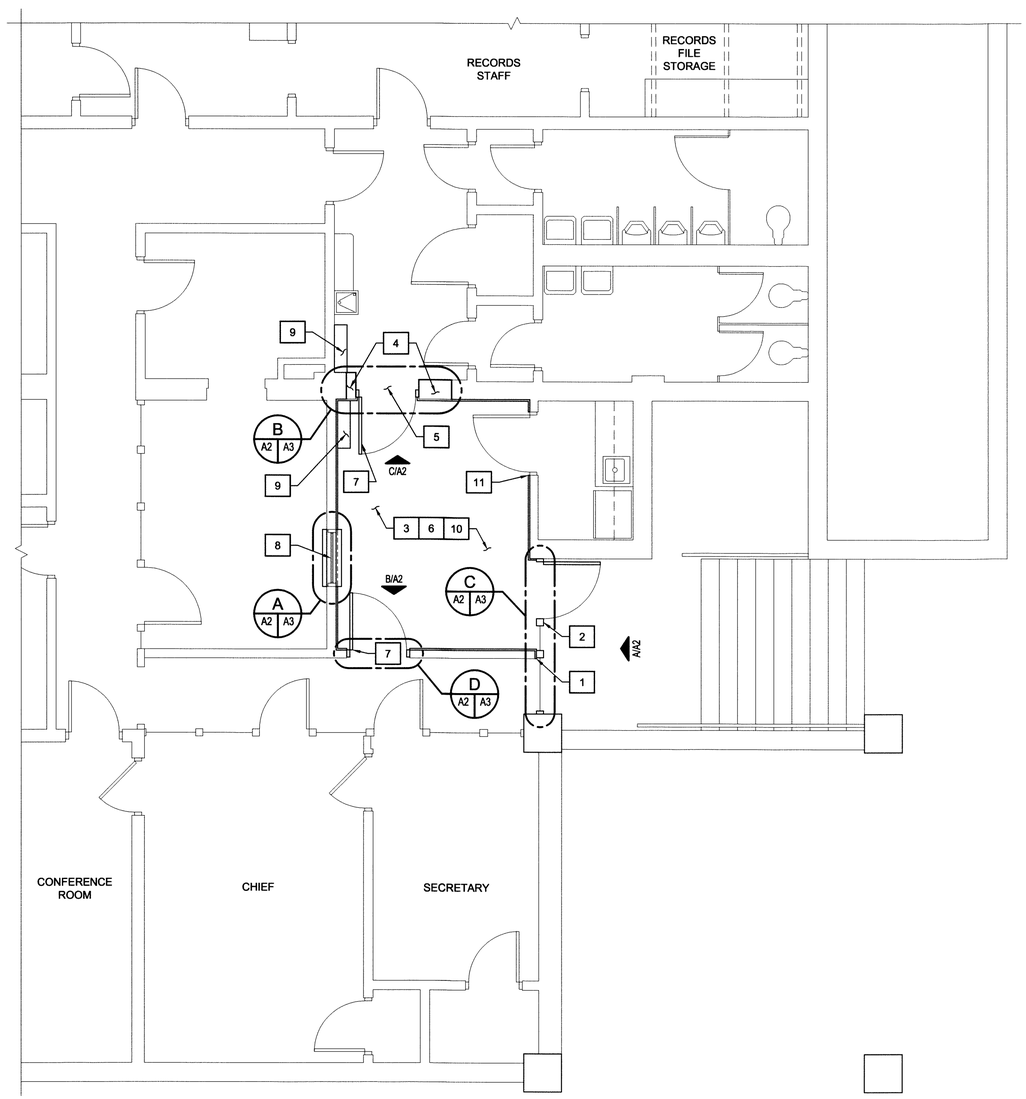

NORTH

PARTIAL GROUND FLOOR PLAN
SCALE: 1/4"=1'-0"
0 1' 5' 10'

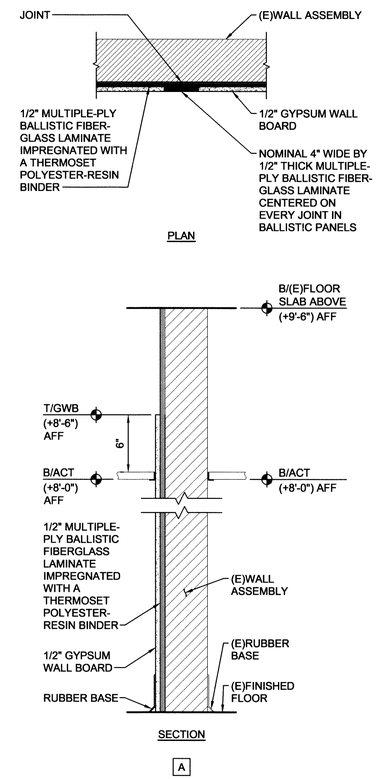

WALL TYPES
SCALE: 1 1/2"=1'-0"
0 3" 6" 9" 1'

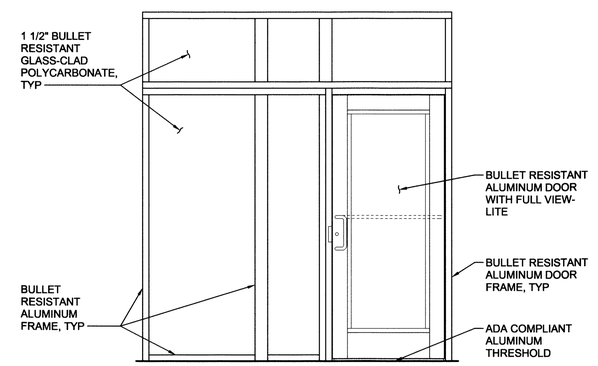

A A2 A2 ELEVATION
SCALE: 1/2"=1'-0"
0 6" 1' 2' 5'

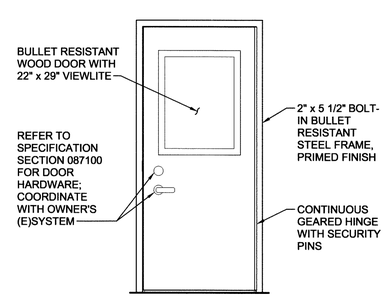

B A2 A2 ELEVATION
SCALE: 1/2"=1'-0"
0 6" 1' 2' 5'

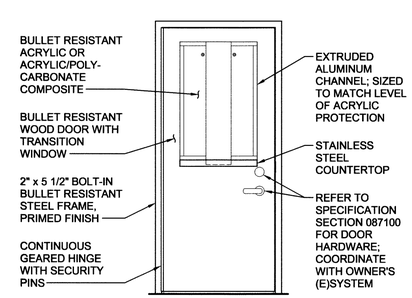

C A2 A2 ELEVATION
SCALE: 1/2"=1'-0"
0 6" 1' 2' 5'

NO.	BY	REVISIONS	DATE

COMMONWEALTH OF VIRGINIA
STEPHEN D. HERRING
Lic. No. 015253
5/10/2016
ARCHITECT

Virginia A&E
VIRGINIA A&E, PLLC
1115 VISTA PARK DRIVE
FOREST, VIRGINIA 24551
PHONE: (434) 316-6001

CITY OF LYNCHBURG
PUBLIC SAFETY BUILDING
LOBBY HARDENING
CITY PROJECT NO. BM172
LYNCHBURG, VIRGINIA

PARTIAL GROUND FLOOR PLAN

DATE: 10 MAY 16
PROJECT NO: 15009

Full Scale Verification
0" 1"

Drawing No.:
A2

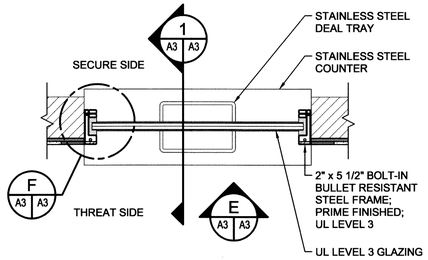

A A2 A3 ENLARGED PLAN - TRANSACTION WINDOW
SCALE: 1"=1'-0"
0 3" 6" 1' 2'

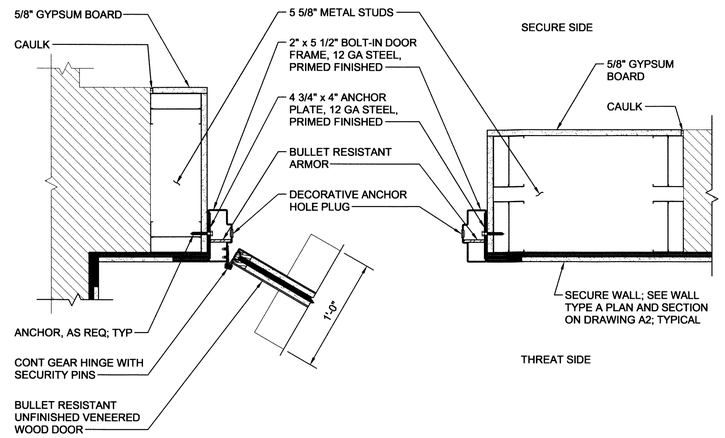

B A2 A3 ENLARGED PLAN
SCALE: 1 1/2"=1'-0"
0 3" 6" 9" 1'

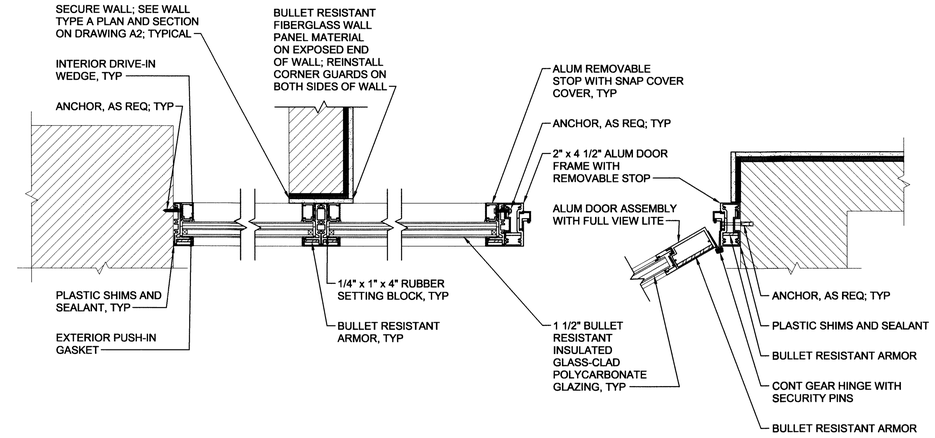

C A2 A3 ENLARGED PLAN
SCALE: 1/8"=1'-0"
0 5' 10' 15' 20'

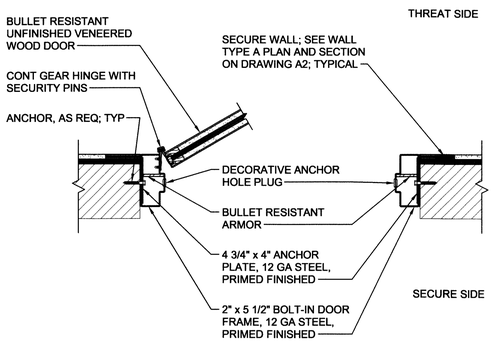

D A2 A3 ENLARGED PLAN
SCALE: 1 1/2"=1'-0"
0 3" 6" 9" 1'

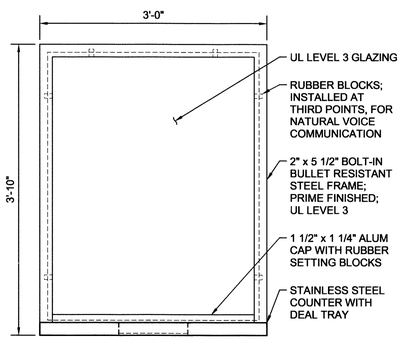

NOTE:
EXISTING ROUGH OPENING TO REMAIN. CONTRACTOR TO VERIFY ROUGH OPENING DIMENSIONS.

E A3 A3 ELEVATION - TRANSACTION WINDOW
SCALE: 1"=1'-0"
0 3" 6" 1' 2'

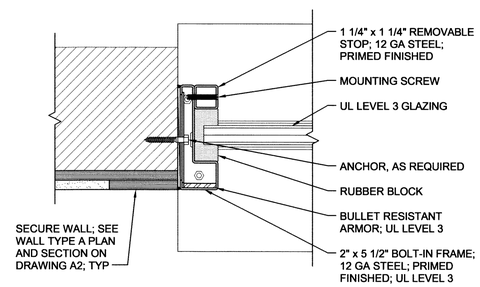

F A3 A3 ENLARGED DETAIL
SCALE: 3"=1'-0"
0 3" 6" 9" 1'

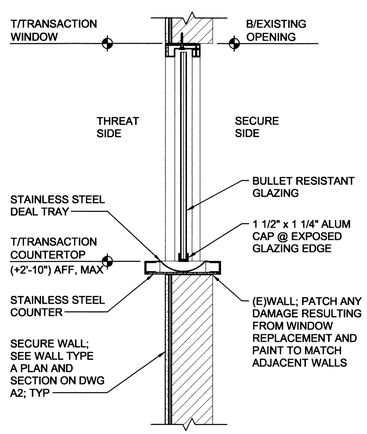

1 A3 A3 SECTION - TRANSACTION WINDOW
SCALE: 1"=1'-0"
0 3" 6" 1' 2'

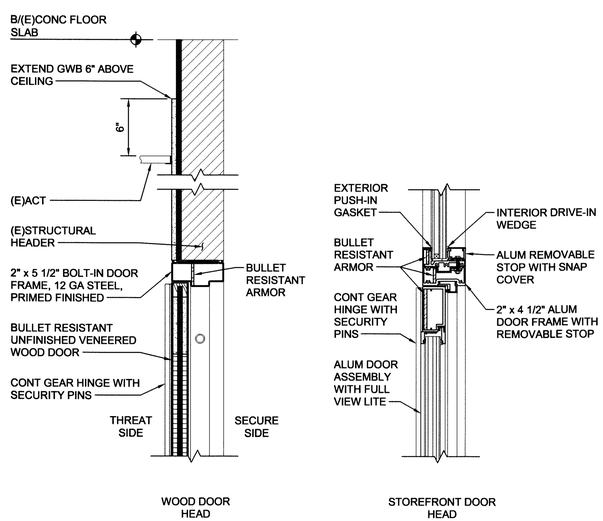

WOOD DOOR HEAD
STOREFRONT DOOR HEAD

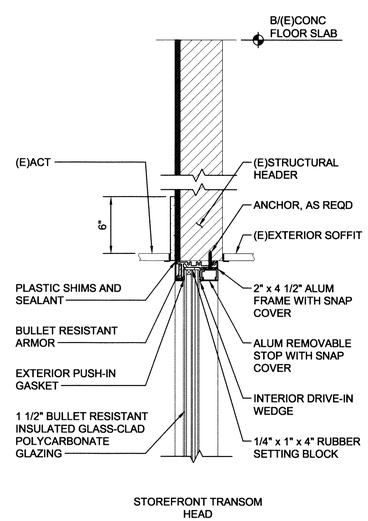

STOREFRONT TRANSOM HEAD

HEAD DETAILS
SCALE: 1 1/2"=1'-0"
0 3" 6" 9" 1'

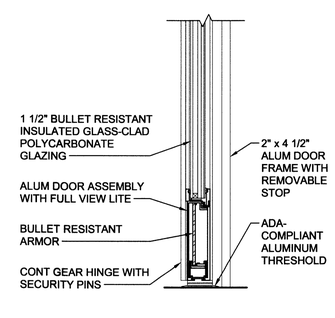

STOREFRONT DOOR SILL

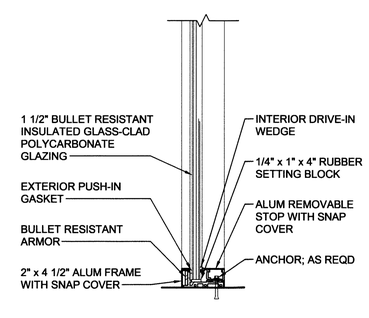

WINDOW SILL

SILL DETAILS
SCALE: 1 1/2"=1'-0"
0 3" 6" 9" 1'

NO.	BY	REVISIONS	DATE

COMMONWEALTH OF VIRGINIA
STEPHEN D. HERRING
Lic. No. 015253
5/10/2016
ARCHITECT

Virginia A & E
VIRGINIA A&E, PLLC
1115 VISTA PARK DRIVE
FOREST, VIRGINIA 24551
PHONE: (434) 316-6001

CITY OF LYNCHBURG
PUBLIC SAFETY BUILDING
LOBBY HARDENING
CITY PROJECT NO. BM172
LYNCHBURG, VIRGINIA

SECTIONS AND DETAILS

DATE: 10 MAY 16
PROJECT NO: 16009

Full Scale Verification
0" 1"

Drawing No.:
A3

SECTION 079200 - JOINT SEALANTS

PART 1 - GENERAL
1.1 SECTION REQUIREMENTS
A. SUBMITTALS: PRODUCT DATA FOR EACH JOINT-SEALANT PRODUCT INDICATED.
B. QUALITY ASSURANCE: SOURCE LIMITATIONS: OBTAIN EACH KIND OF JOINT SEALANT FROM SINGLE SOURCE FROM SINGLE MANUFACTURER.
C. PROJECT CONDITIONS: DO NOT PROCEED WITH INSTALLATION OF JOINT SEALANTS UNTIL PROJECT CONDITIONS MEET MANUFACTURER'S SPECIFICATIONS.

PART 2 - PRODUCTS
2.1 MATERIALS, GENERAL
A. COMPATIBILITY: PROVIDE JOINT SEALANTS, BACKINGS, AND OTHER RELATED MATERIALS THAT ARE COMPATIBLE WITH ONE ANOTHER AND WITH JOINT SUBSTRATES UNDER CONDITIONS OF SERVICE AND APPLICATION.
B. STAIN-TEST-RESPONSE CHARACTERISTICS: WHERE SEALANTS ARE SPECIFIED TO BE NONSTAINING TO POROUS SUBSTRATES, PROVIDE PRODUCTS THAT HAVE UNDERGONE TESTING ACCORDING TO ASTM C 1248 AND HAVE NOT STAINED POROUS JOINT SUBSTRATES INDICATED FOR PROJECT.

2.2 URETHANE JOINT SEALANTS
A. SINGLE-COMPONENT, NONSAG, URETHANE JOINT SEALANT: ASTM C 920, TYPE S, GRADE NS, CLASS 25, FOR USE NT.

2.3 JOINT SEALANT BACKING
A. GENERAL: PROVIDE SEALANT BACKINGS OF MATERIAL THAT ARE NONSTAINING; ARE COMPATIBLE WITH JOINT SUBSTRATES, SEALANTS, PRIMERS, AND OTHER JOINT FILLERS; AND ARE APPROVED FOR APPLICATIONS INDICATED BY SEALANT MANUFACTURER.
B. BOND-BREAKER TAPE: POLYETHYLENE TAPE OR OTHER PLASTIC TAPE RECOMMENDED BY SEALANT MANUFACTURER FOR PREVENTING SEALANT FROM ADHERING TO RIGID, INFLEXIBLE JOINT-FILLER MATERIALS OR JOINT SURFACES AT BACK OF JOINT. PROVIDE SELF-ADHESIVE TAPE WHERE APPLICABLE.

PART 3 - EXECUTION
3.1 EXAMINATION
A. PROCEED WITH INSTALLATION ONLY AFTER UNSATISFACTORY CONDITIONS HAVE BEEN CORRECTED.

3.2 PREPARATION
A. SURFACE CLEANING OF JOINTS: CLEAN OUT JOINTS IMMEDIATELY BEFORE INSTALLING JOINT SEALANTS TO COMPLY WITH JOINT-SEALANT MANUFACTURER'S WRITTEN INSTRUCTIONS.
JOINT PRIMING: PRIME JOINT SUBSTRATES WHERE RECOMMENDED BY JOINT-SEALANT MANUFACTURER OR AS INDICATED BY PRECONSTRUCTION JOINT-SEALANT-SUBSTRATE TESTS OR PRIOR EXPERIENCE. APPLY PRIMER TO COMPLY WITH JOINT-SEALANT MANUFACTURER'S WRITTEN INSTRUCTIONS. CONFINE PRIMERS TO AREAS OF JOINT-SEALANT BOND; DO NOT ALLOW SPILLAGE OR MIGRATION ONTO ADJOINING SURFACES.
B. MASKING TAPE: USE MASKING TAPE WHERE REQUIRED TO PREVENT CONTACT OF SEALANT OR PRIMER WITH ADJOINING SURFACES THAT OTHERWISE WOULD BE PERMANENTLY STAINED OR DAMAGED BY SUCH CONTACT OR BY CLEANING METHODS REQUIRED TO REMOVE SEALANT SMEARS. REMOVE TAPE IMMEDIATELY AFTER TOOLING WITHOUT DISTURBING JOINT SEAL.

3.3 INSTALLATION OF JOINT SEALANTS
A. GENERAL: COMPLY WITH JOINT-SEALANT MANUFACTURER'S WRITTEN INSTALLATION INSTRUCTIONS FOR PRODUCTS AND APPLICATIONS INDICATED, UNLESS MORE STRINGENT REQUIREMENTS APPLY.
B. INSTALL SEALANT BACKINGS TO SUPPORT SEALANTS DURING APPLICATION AND AT POSITION REQUIRED TO PRODUCE CROSS-SECTIONAL SHAPES AND DEPTHS OF INSTALLED SEALANTS RELATIVE TO JOINT WIDTHS THAT ALLOW OPTIMUM SEALANT MOVEMENT CAPABILITY.
1. DO NOT LEAVE GAPS BETWEEN ENDS OF SEALANT BACKINGS.
2. DO NOT STRETCH, TWIST, PUNCTURE, OR TEAR SEALANT BACKINGS.
3. REMOVE ABSORBENT SEALANT BACKINGS THAT HAVE BECOME WET BEFORE SEALANT APPLICATION AND REPLACE THEM WITH DRY MATERIALS.
C. INSTALL BOND-BREAKER TAPE BEHIND SEALANTS WHERE SEALANT BACKINGS ARE NOT USED BETWEEN SEALANTS AND BACKS OF JOINTS.
D. INSTALL SEALANTS USING PROVEN TECHNIQUES THAT COMPLY WITH MANUFACTURER'S WRITTEN INSTRUCTIONS AND AT THE SAME TIME BACKINGS ARE INSTALLED.
E. TOOLING OF NONSAG SEALANTS: IMMEDIATELY AFTER SEALANT APPLICATION AND BEFORE SKINNING OR CURING BEGINS, TOOL SEALANTS ACCORDING TO MANUFACTURER'S REQUIREMENTS TO FORM SMOOTH, UNIFORM BEADS; TO ELIMINATE AIR POCKETS; AND TO ENSURE CONTACT AND ADHESION OF SEALANT WITH SIDES OF JOINT.

3.4 CLEANING
A. CLEAN OFF EXCESS SEALANT OR SEALANT SMEARS ADJACENT TO JOINTS AS THE WORK PROGRESSES BY METHODS AND WITH CLEANING MATERIALS APPROVED IN WRITING BY MANUFACTURERS OF JOINT SEALANTS AND OF PRODUCTS IN WHICH JOINTS OCCUR.

3.5 PROTECTION
A. PROTECT JOINT SEALANTS DURING AND AFTER CURING PERIOD FROM CONTACT WITH CONTAMINATING SUBSTANCES AND FROM DAMAGE RESULTING FROM CONSTRUCTION OPERATIONS OR OTHER CAUSES SO SEALANTS ARE WITHOUT DETERIORATION OR DAMAGE AT TIME OF SUBSTANTIAL COMPLETION. IF, DESPITE SUCH PROTECTION, DAMAGE OR DETERIORATION OCCURS, CUT OUT AND REMOVE DAMAGED OR DETERIORATED JOINT SEALANTS IMMEDIATELY SO INSTALLATIONS WITH REPAIRED AREAS ARE INDISTINGUISHABLE FROM ORIGINAL WORK.

3.6 JOINT-SEALANT SCHEDULE
A. JOINTS BETWEEN DIFFERENT MATERIALS.
1. URETHANE JOINT SEALANT: SINGLE COMPONENT, NONSAG, CLASS 25.
2. JOINT-SEALANT COLOR: AS SELECTED BY ARCHITECT/ENGINEER FROM MANUFACTURER'S FULL RANGE OF COLORS.

END OF SECTION 079200

SECTION 087100 - DOOR HARDWARE

PART 1 - GENERAL
1.1 SECTION REQUIREMENTS
A. SUBMITTALS: HARDWARE SCHEDULE AND KEYING SCHEDULE.
B. DELIVER KEYS TO OWNER.

PART 2 - PRODUCTS
2.1 HARDWARE
A. KEYING SYSTEM TO BE COMPATIBLE WITH OWNER'S EXISTING SYSTEM.
B. HINGES.
C. LOCKSETS AND LATCHSETS:
1. BHMA A156.2, SERIES 4000, GRADE 1 FOR MORTISE LOCKS AND LATCHES.
2. BHMA A156.5, GRADE 1 FOR AUXILIARY LOCKS.
3. LEVER HANDLES ON LOCKSETS AND LATCHSETS THAT COMPLY WITH ADAAG REQUIREMENTS.
D. KEY LOCKS TO OWNER'S EXISTING MASTER-KEY SYSTEM.
1. CYLINDERS WITH SIX-PIN TUMBLERS AND REMOVABLE CORES.
E. PROVIDE WALL STOP FOR ALL DOORS.
F. CLOSERS:
1. MOUNT CLOSERS ON INTERIOR SIDE (ROOM SIDE) OF DOOR OPENING. PROVIDE REGULAR-ARM, PARALLEL-ARM, OR TOP-JAMB-MOUNTED CLOSERS AS NECESSARY.
2. ADJUSTABLE DELAYED OPENING FEATURE ON CLOSERS.
G. PROVIDE FINISHES FOR OTHER DOOR HARDWARE TO MATCH FINISH OF LOCKSET.

PART 3 - EXECUTION
3.1 INSTALLATION
A. MOUNT HARDWARE IN LOCATIONS RECOMMENDED BY THE DOOR AND HARDWARE INSTITUTE UNLESS OTHERWISE INDICATED.
B. CONNECT RETAINED WIRING TO ELECTRIC STRIKES. COORDINATE CONNECTION OF ELECTRIC STRIKE TO PUSH BUTTON KEY PAD AT EACH DOOR AND TO EXISTING CONTROL STATION AT SERVICE COUNTER.

3.2 HARDWARE SCHEDULE
A. BASIS OF DESIGN PRODUCTS LISTED. VERIFY PRODUCTS AND OPERATION WITH OWNER. MATCH ROSE DIMENSION, LEVER STYLE, AND HARDWARE FINISHES WITH OWNER'S EXISTING HARDWARE, UNLESS OTHERWISE NOTED.
B. HARDWARE SET A (INTERIOR DOORS):
1. HINGES: PROVIDE AS PART OF DOOR/FRAME ASSEMBLY.
2. ELECTRIC STRIKE: ADAMS RITE 7130, FAIL SAFE/FAIL SECURE.
3. CYLINDRICAL LOCKSET/LATCHSET: YALE SERIES 5400, GRADE 1 (ANSI A156.2), LEVER HANDLE WITH THROUGH BOLTED TRIM, ROUND ROSE, INTERCHANGEABLE CORE. ENTRANCE LOCKSET/LATCHSET (F86), LEVER BOTH SIDES, BHMA 652. LOBBY SIDE LEVER ALWAYS LOCKED, AND UNLOCKED BY KEY OR RELEASE OF ELECTRIC STRIKE ONLY.
C. HARDWARE SET B (EXTERIOR DOOR):
1. HINGES: PROVIDE AS PART OF DOOR/FRAME ASSEMBLY.
2. ELECTRIC STRIKE: ADAMS RITE 7130, FAIL SAFE/FAIL SECURE, DARK BRONZE ANODIZED.
3. DEAD LATCH: ADAMS RITE 4510 WITH MANUFACTURER'S STANDARD PUSH BAR ON INTERIOR, DOOR MANUFACTURER'S STANDARD ADA-COMPLIANT PULL ON EXTERIOR.
4. CYLINDRICAL LOCKSETS: YALE SERIES 5400, GRADE 1 (ANSI A156.2), INTERCHANGEABLE CORE, EXTERIOR UNLOCKED BY KEY OR RELEASE OF ELECTRIC STRIKE, INTERIOR UNLOCKED BY PUSH BAR.
5. THRESHOLD: ALUMINUM, ADA-COMPLIANT, CENTERED BELOW DOOR IN CLOSED POSITION.
6. WEATHERSTRIPPING: FULL PERIMETER GASKET/WEATHERSTRIPPING.

END OF SECTION 087100

SECTION 092216 - NON-STRUCTURAL METAL FRAMING

PART 1 - GENERAL
1.1 SECTION REQUIREMENTS
A. SUBMITTALS: PRODUCT DATA.

PART 2 - PRODUCTS
2.1 METAL FRAMING AND SUPPORTS
A. STEEL FRAMING MEMBERS, GENERAL: ASTM C 754.
1. STEEL SHEET COMPONENTS: ASTM C 645. THICKNESS SPECIFIED IS MINIMUM UNCOATED BASE-METAL THICKNESS.
2. PROTECTIVE COATING: ASTM A 653, G40, HOT-DIP GALVANIZED ZINC COATING.
B. PARTITION FRAMING:
1. STUDS AND RUNNERS: IN DEPTH INDICATED AND 0.033 INCH THICK UNLESS OTHERWISE INDICATED.
2. FLAT STRAP AND BACKING: 0.033 INCH THICK.
3. RIGID HAT-SHAPED FURRING CHANNELS: IN DEPTH INDICATED AND 0.0296 INCH THICK.

2.2 ACCESSORIES
A. GENERAL: COMPLY WITH REFERENCED INSTALLATION STANDARDS.
1. FASTENERS FOR METAL FRAMING: OF TYPE, MATERIAL, SIZE, CORROSION RESISTANCE, HOLDING POWER, AND OTHER PROPERTIES REQUIRED TO FASTEN STEEL MEMBERS TO SUBSTRATES.
B. ACOUSTICAL SEALANT FOR CONCEALED JOINTS: NONSAG, LATEX SEALANT COMPLYING WITH ASTM C 834.

PART 3 - EXECUTION
3.1 INSTALLATION
A. INSTALL STEEL FRAMING TO COMPLY WITH ASTM C 754 AND WITH ASTM C 840 REQUIREMENTS THAT APPLY TO FRAMING INSTALLATION AND WITH UNITED STATES GYPSUM'S "GYPSUM CONSTRUCTION HANDBOOK."
B. INSTALL SUPPLEMENTARY FRAMING, AND BLOCKING TO SUPPORT HEAVY TRIM OR SIMILAR CONSTRUCTION.
C. ISOLATE STEEL FRAMING FROM BUILDING STRUCTURE, EXCEPT AT FLOOR, TO PREVENT TRANSFER OF LOADING IMPOSED BY STRUCTURAL MOVEMENT.

END OF SECTION 092216

SECTION 092900 - GYPSUM BOARD

PART 1 - GENERAL
1.1 SECTION REQUIREMENTS
A. SUBMITTALS: PRODUCT DATA.

PART 2 - PRODUCTS
2.1 PANEL PRODUCTS
A. PROVIDE IN MAXIMUM LENGTHS AVAILABLE TO MINIMIZE END-TO-END BUTT JOINTS.
B. INTERIOR GYPSUM BOARD: ASTM C 36 OR ASTM C 1396, IN THICKNESS INDICATED, WITH MANUFACTURER'S STANDARD EDGES. TYPE X UNLESS OTHERWISE INDICATED. PROVIDE MOISTURE RESISTANT GYPSUM BOARD IN AREAS SUBJECT TO MOISTURE.

2.2 ACCESSORIES
A. TRIM ACCESSORIES: ASTM C 1047, FORMED FROM GALVANIZED OR ALUMINUM-COATED STEEL SHEET, ROLLED ZINC, PLASTIC, OR PAPER-FACED GALVANIZED-STEEL SHEET.
1. PROVIDE CORNERBEAD AT OUTSIDE CORNERS UNLESS OTHERWISE INDICATED.
2. PROVIDE LC-BEAD (J-BEAD) AT EXPOSED PANEL EDGES.
3. PROVIDE CONTROL JOINTS WHERE INDICATED OR WHERE REQUIRED BY MANUFACTURER.
B. JOINT-TREATMENT MATERIALS: ASTM C 475.
1. JOINT TAPE: PAPER UNLESS OTHERWISE RECOMMENDED BY PANEL MANUFACTURER.
2. JOINT COMPOUNDS: SETTING-TYPE TAPING COMPOUND AND DRYING-TYPE, READY-MIXED, COMPOUNDS FOR TOPPING.
C. ACOUSTICAL SEALANT FOR EXPOSED AND CONCEALED JOINTS: NONSAG, PAINTABLE, NONSTAINING LATEX SEALANT COMPLYING WITH ASTM C 834.

PART 3 - EXECUTION
3.1 INSTALLATION
A. INSTALL GYPSUM BOARD TO COMPLY WITH ASTM C 840.
1. ISOLATE GYPSUM BOARD ASSEMBLIES FROM ABUTTING STRUCTURAL AND MASONRY WORK. PROVIDE EDGE TRIM & ACOUSTICAL SEALANT.
2. MULTI-LAYER FASTENING METHODS: FASTEN BASE LAYERS AND FACE LAYER SEPARATELY TO SUPPORTS WITH SCREWS.
B. FINISHING GYPSUM BOARD: ASTM C 840.
1. AT CONCEALED AREAS, PROVIDE LEVEL 1 FINISH: EMBED TAPE AT JOINTS. EXTEND GYPSUM BOARD TO 6" ABOVE CEILING.
2. UNLESS OTHERWISE INDICATED, PROVIDE LEVEL 5 FINISH: EMBED TAPE AND APPLY SEPARATE FIRST, FILL, AND FINISH COATS OF JOINT COMPOUND TO TAPE, FASTENERS, AND TRIM FLANGES.
C. PROTECT ADJACENT SURFACES FROM DRYWALL COMPOUND. REPAIR SURFACES STAINED, MARRED, OR OTHERWISE DAMAGED DURING DRYWALL APPLICATION.
D. REMOVE AND REPLACE PANELS THAT ARE WET, MOISTURE DAMAGED, OR MOLD DAMAGED.

END OF SECTION 092900

SECTION 096513 - RESILIENT BASE AND ACCESSORIES

PART 1 - GENERAL
1.1 ACTION SUBMITTALS
A. PRODUCT DATA: FOR EACH TYPE OF PRODUCT.
B. SAMPLES FOR INITIAL SELECTION: FOR EACH TYPE OF PRODUCT INDICATED.

1.2 MAINTENANCE MATERIAL SUBMITTALS
A. FURNISH EXTRA MATERIALS THAT MATCH PRODUCTS INSTALLED AND THAT ARE PACKAGED WITH PROTECTIVE COVERING FOR STORAGE AND IDENTIFIED WITH LABELS DESCRIBING CONTENTS. FURNISH NOT LESS THAN 10 LINEAR FEET FOR EVERY 500 LINEAR FEET OR FRACTION THEREOF, OF EACH TYPE, COLOR, PATTERN, AND SIZE OF RESILIENT PRODUCT INSTALLED.

1.3 DELIVERY, STORAGE, AND HANDLING
A. STORE RESILIENT PRODUCTS AND INSTALLATION MATERIALS IN DRY SPACES PROTECTED FROM THE WEATHER, WITH AMBIENT TEMPERATURES MAINTAINED WITHIN RANGE RECOMMENDED BY MANUFACTURER, BUT NOT LESS THAN 50 DEG F OR MORE THAN 90 DEG F.

1.4 FIELD CONDITIONS
A. MAINTAIN AMBIENT TEMPERATURES WITHIN RANGE RECOMMENDED BY MANUFACTURER, BUT NOT LESS THAN 70 DEG F OR MORE THAN 95 DEG F, IN SPACES TO RECEIVE RESILIENT PRODUCTS DURING THE FOLLOWING TIME PERIODS: 1) 48 HOURS BEFORE INSTALLATION; 2) DURING INSTALLATION; AND 3) 48 HOURS AFTER INSTALLATION.
B. AFTER INSTALLATION AND UNTIL SUBSTANTIAL COMPLETION, MAINTAIN AMBIENT TEMPERATURES WITHIN RANGE RECOMMENDED BY MANUFACTURER, BUT NOT LESS THAN 55 DEG F OR MORE THAN 95 DEG F.
C. INSTALL RESILIENT PRODUCTS AFTER OTHER FINISHING OPERATIONS, INCLUDING PAINTING, HAVE BEEN COMPLETED.

PART 2 - PRODUCTS
2.1 THERMOSET-RUBBER BASE - RB-1:
A. RESILIENT BASE BASIS-OF-DESIGN PRODUCT IS SUBJECT TO COMPLIANCE WITH REQUIREMENTS PROVIDE JOHNSONITE COVE BASE, OR COMPARABLE PRODUCT BY: 1) BURKE MERCER FLOORING PRODUCTS, DIVISION OF BURKE INDUSTRIES INC.; 2) FLEXCO; OR 3) ROPPE.
1. PRODUCT STANDARD: ASTM F 1861, TYPE TS (RUBBER, VULCANIZED THERMOSET), GROUP I (SOLID, HOMOGENEOUS). STYLE B, COVE: BASE WITH TOE.
2. THICKNESS: 0.125 INCH.
3. LENGTHS: COILS IN MANUFACTURER'S STANDARD LENGTHS.
4. OUTSIDE CORNERS: PREFORMED.
5. INSIDE CORNERS: PREFORMED.
6. COLORS: MATCH EXISTING.

2.2 INSTALLATION MATERIALS
A. TROWELABLE LEVELING AND PATCHING COMPOUNDS: LATEX-MODIFIED, PORTLAND CEMENT BASED OR BLENDED HYDRAULIC-CEMENT-BASED FORMULATION PROVIDED OR APPROVED BY RESILIENT-PRODUCT MANUFACTURER FOR APPLICATIONS INDICATED.
B. ADHESIVES: WATER-RESISTANT TYPE RECOMMENDED BY RESILIENT-PRODUCT MANUFACTURER FOR RESILIENT PRODUCTS AND SUBSTRATE CONDITIONS INDICATED, PER MANUFACTURER'S REQUIREMENTS.

PART 3 - EXECUTION
3.1 EXAMINATION
A. EXAMINE SUBSTRATES, WITH INSTALLER PRESENT, FOR COMPLIANCE WITH REQUIREMENTS FOR MAXIMUM MOISTURE CONTENT AND OTHER CONDITIONS AFFECTING PERFORMANCE OF THE WORK. VERIFY THAT FINISHES OF SUBSTRATES COMPLY WITH TOLERANCES AND OTHER REQUIREMENTS SPECIFIED IN OTHER SECTIONS AND THAT SUBSTRATES ARE FREE OF CRACKS, RIDGES, DEPRESSIONS, SCALE, AND FOREIGN DEPOSITS THAT MIGHT INTERFERE WITH ADHESION OF RESILIENT PRODUCTS. PROCEED WITH INSTALLATION ONLY AFTER UNSATISFACTORY CONDITIONS HAVE BEEN CORRECTED. INSTALLATION OF RESILIENT PRODUCTS INDICATES ACCEPTANCE OF SURFACES AND CONDITIONS.

3.2 PREPARATION
A. PREPARE SUBSTRATES ACCORDING TO MANUFACTURER'S WRITTEN INSTRUCTIONS TO ENSURE ADHESION OF RESILIENT PRODUCTS. FILL CRACKS, HOLES, AND DEPRESSIONS IN SUBSTRATES WITH TROWELABLE LEVELING AND PATCHING COMPOUND; REMOVE BUMPS AND RIDGES TO PRODUCE A UNIFORM AND SMOOTH SUBSTRATE. DO NOT INSTALL RESILIENT PRODUCTS UNTIL THEY ARE THE SAME TEMPERATURE AS THE SPACE WHERE THEY ARE TO BE INSTALLED. AT LEAST 48 HOURS IN ADVANCE OF INSTALLATION, MOVE RESILIENT PRODUCTS AND INSTALLATION MATERIALS INTO SPACES WHERE THEY WILL BE INSTALLED. IMMEDIATELY BEFORE INSTALLATION, SWEEP AND VACUUM CLEAN SUBSTRATES TO BE COVERED BY RESILIENT PRODUCTS.

3.3 RESILIENT BASE INSTALLATION
A. COMPLY WITH MANUFACTURER'S WRITTEN INSTRUCTIONS FOR INSTALLING RESILIENT BASE. APPLY RESILIENT BASE TO WALLS AND OTHER PERMANENT FIXTURES IN ROOMS AND AREAS WHERE BASE IS REQUIRED. INSTALL RESILIENT BASE IN LENGTHS AS LONG AS PRACTICAL WITHOUT GAPS AT SEAMS AND WITH TOPS OF ADJACENT PIECES ALIGNED. TIGHTLY ADHERE RESILIENT BASE TO SUBSTRATE THROUGHOUT LENGTH OF EACH PIECE, WITH BASE IN CONTINUOUS CONTACT WITH HORIZONTAL AND VERTICAL SUBSTRATES. DO NOT STRETCH RESILIENT BASE DURING INSTALLATION. INSTALL PREFORMED CORNERS BEFORE INSTALLING STRAIGHT PIECES.

3.4 RESILIENT ACCESSORY INSTALLATION
A. COMPLY WITH MANUFACTURER'S WRITTEN INSTRUCTIONS FOR INSTALLING RESILIENT ACCESSORIES. BUTT TO ADJACENT MATERIALS AND TIGHTLY ADHERE TO SUBSTRATES THROUGHOUT LENGTH OF EACH PIECE. INSTALL REDUCER STRIPS AT EDGES OF FLOOR COVERING THAT WOULD OTHERWISE BE EXPOSED.

3.5 CLEANING AND PROTECTION
A. COMPLY WITH MANUFACTURER'S WRITTEN INSTRUCTIONS FOR CLEANING AND PROTECTING RESILIENT PRODUCTS.
B. PERFORM THE FOLLOWING OPERATIONS IMMEDIATELY AFTER COMPLETING RESILIENT-PRODUCT INSTALLATION: 1) REMOVE ADHESIVE AND OTHER BLEMISHES FROM EXPOSED SURFACES; 2) SWEEP AND VACUUM HORIZONTAL SURFACES THOROUGHLY; AND 3) DAMP-MOP HORIZONTAL SURFACES TO REMOVE MARKS AND SOIL.
C. PROTECT RESILIENT PRODUCTS FROM MARS, MARKS, INDENTATIONS, AND OTHER DAMAGE FROM CONSTRUCTION OPERATIONS AND PLACEMENT OF EQUIPMENT AND FIXTURES DURING REMAINDER OF CONSTRUCTION PERIOD.
D. COVER RESILIENT PRODUCTS SUBJECT TO WEAR AND FOOT TRAFFIC UNTIL SUBSTANTIAL COMPLETION.

END OF SECTION 096513

SECTION 099123 - INTERIOR PAINTING

PART 1 - GENERAL
1.1 SECTION REQUIREMENTS
A. SUMMARY: PAINT EXPOSED SURFACES, NEW AND DISTURBED, UNLESS OTHERWISE INDICATED.
1. DO NOT PAINT PREFINISHED ITEMS, ITEMS WITH AN INTEGRAL FINISH, OPERATING PARTS, AND LABELS UNLESS OTHERWISE INDICATED.
B. SUBMITTALS:
1. PRODUCT DATA. INCLUDE PRINTOUT OF "MPI APPROVED PRODUCTS LIST" WITH PRODUCT HIGHLIGHTED.
2. SAMPLES.
C. MPI STANDARDS:
1. PRODUCTS: COMPLYING WITH MPI STANDARDS INDICATED AND LISTED IN "MPI APPROVED PRODUCTS LIST."
2. PREPARATION AND WORKMANSHIP: COMPLY WITH REQUIREMENTS IN "MPI ARCHITECTURAL PAINTING SPECIFICATION MANUAL" FOR PRODUCTS AND PAINT SYSTEMS INDICATED.
D. EXTRA MATERIALS: DELIVER TO OWNER 1 GAL. OF EACH COLOR AND TYPE OF FINISH COAT PAINT USED ON PROJECT, IN CONTAINERS, PROPERLY LABELED AND SEALED.

PART 2 - PRODUCTS
2.1 PAINT
A. MATERIAL COMPATIBILITY: PROVIDE MATERIALS THAT ARE COMPATIBLE WITH ONE ANOTHER AND WITH SUBSTRATES.
1. FOR EACH COAT IN A PAINT SYSTEM, PROVIDE PRODUCTS RECOMMENDED IN WRITING BY MANUFACTURERS OF TOPCOAT FOR USE IN PAINT SYSTEM AND ON SUBSTRATE INDICATED.
B. COLORS: MATCH EXISTING.

PART 3 - EXECUTION
3.1 PREPARATION
A. REMOVE HARDWARE, LIGHTING FIXTURES, AND SIMILAR ITEMS THAT ARE NOT TO BE PAINTED. MASK ITEMS THAT CANNOT BE REMOVED. REINSTALL ITEMS IN EACH AREA AFTER PAINTING IS COMPLETE.
B. CLEAN AND PREPARE SURFACES IN AN AREA BEFORE BEGINNING PAINTING IN THAT AREA. SCHEDULE PAINTING SO CLEANING OPERATIONS WILL NOT DAMAGE NEWLY PAINTED SURFACES.

3.2 APPLICATION
A. APPLY PAINTS ACCORDING TO MANUFACTURER'S WRITTEN INSTRUCTIONS.
1. USE BRUSHES WHERE THE USE OF OTHER APPLICATORS IS NOT PRACTICAL.
2. USE ROLLERS FOR FINISH COAT ON WALLS.
B. APPLY PAINTS TO PRODUCE SURFACE FILMS WITHOUT CLOUDINESS, SPOTTING, HOLIDAYS, LAPS, BRUSH MARKS, ROLLER TRACKING, RUNS, SAGS, ROPINESS, OR OTHER SURFACE IMPERFECTIONS. CUT IN SHARP LINES AND COLOR BREAKS.
1. IF UNDERCOATS OR OTHER CONDITIONS SHOW THROUGH TOPCOAT, APPLY ADDITIONAL COATS UNTIL CURED FILM HAS A UNIFORM PAINT FINISH, COLOR, AND APPEARANCE.

3.3 INTERIOR PAINT APPLICATION SCHEDULE
A. STEEL SUBSTRATES:
1. INSTITUTIONAL LOW-ODOR/VOC LATEX SYSTEM:
A. INTERMEDIATE COAT OVER SHOP PRIMER: LATEX, INTERIOR, INSTITUTIONAL LOW ODOR/VOC, MATCHING TOPCOAT.
B. TOPCOAT: LATEX, INTERIOR, LOW ODOR/VOC, (GLOSS LEVEL 2), MPI #144.
B. GYPSUM BOARD SUBSTRATES:
1. INSTITUTIONAL LOW-ODOR/VOC LATEX SYSTEM:
A. PRIME COAT: PRIMER SEALER, INTERIOR, INSTITUTIONAL LOW ODOR/VOC, MPI #149.
B. INTERMEDIATE COAT: LATEX, INTERIOR, INSTITUTIONAL LOW ODOR/VOC, MATCHING TOPCOAT.
C. TOPCOAT: LATEX, INTERIOR, INSTITUTIONAL LOW ODOR/VOC, (GLOSS LEVEL 2), MPI #144.

END OF SECTION 099123

NO.	BY	REVISIONS	DATE

COMMONWEALTH OF VIRGINIA
STEPHEN D. HERRING
Lic. No. 015253
5/10/2016
ARCHITECT

Virginia A&E
VIRGINIA A&E, PLLC
1115 VISTA PARK DRIVE
FOREST, VIRGINIA 24551
PHONE: (434) 316-6001

CITY OF LYNCHBURG
PUBLIC SAFETY BUILDING
LOBBY HARDENING
CITY PROJECT NO. BM172
LYNCHBURG, VIRGINIA

SPECIFICATIONS

DATE: 10 MAY 16
PROJECT NO: 15009

Full Scale Verification
0" 1"

Drawing No.:
A4