STATE	FEDERAL AID PROJECT	STATE ROUTE	STATE PROJECT	SHEET NO.
VA.		29	U000-118-204, C-501 See Tabulation Below For Section Numbers	1

FOR INDEX OF SHEETS SEE SHEET 1B

ELECTRONIC STAKEOUT INFORMATION IS NOT AVAILABLE FOR THIS PROJECT. CONTRACTOR SHALL USE PLANS AND CROSS SECTIONS PROVIDED FOR ALL STAKEOUT REQUIRED FOR THIS PROJECT.

COMMONWEALTH OF VIRGINIA

CITY OF LYNCHBURG

INTERCHANGE IMPROVEMENTS

KEMPER STREET (RT.221) OVER LYNCHBURG EXPRESSWAY (RT.29)
FROM: 235' SOUTH OF 16TH STREET (MIDTOWN CONNECTOR PROJECT)
TO: 0.10 MILE SOUTH OF LYNCHBURG EXPRESSWAY (RT.29) AT RAILROAD OVERPASS

FUNCTIONAL CLASSIFICATION AND TRAFFIC DATA	
	Fr: 255' SOUTH OF 16TH STREET To: 0.10 MILE SOUTH OF LYNCHBURG EXPRESSWAY (RT. 29) AT RAILROAD OVERPASS
ADT	11,000
ADT	
DHV	
D (%) (design hour)	
T (%) (design hour)	
V (MPH)	35

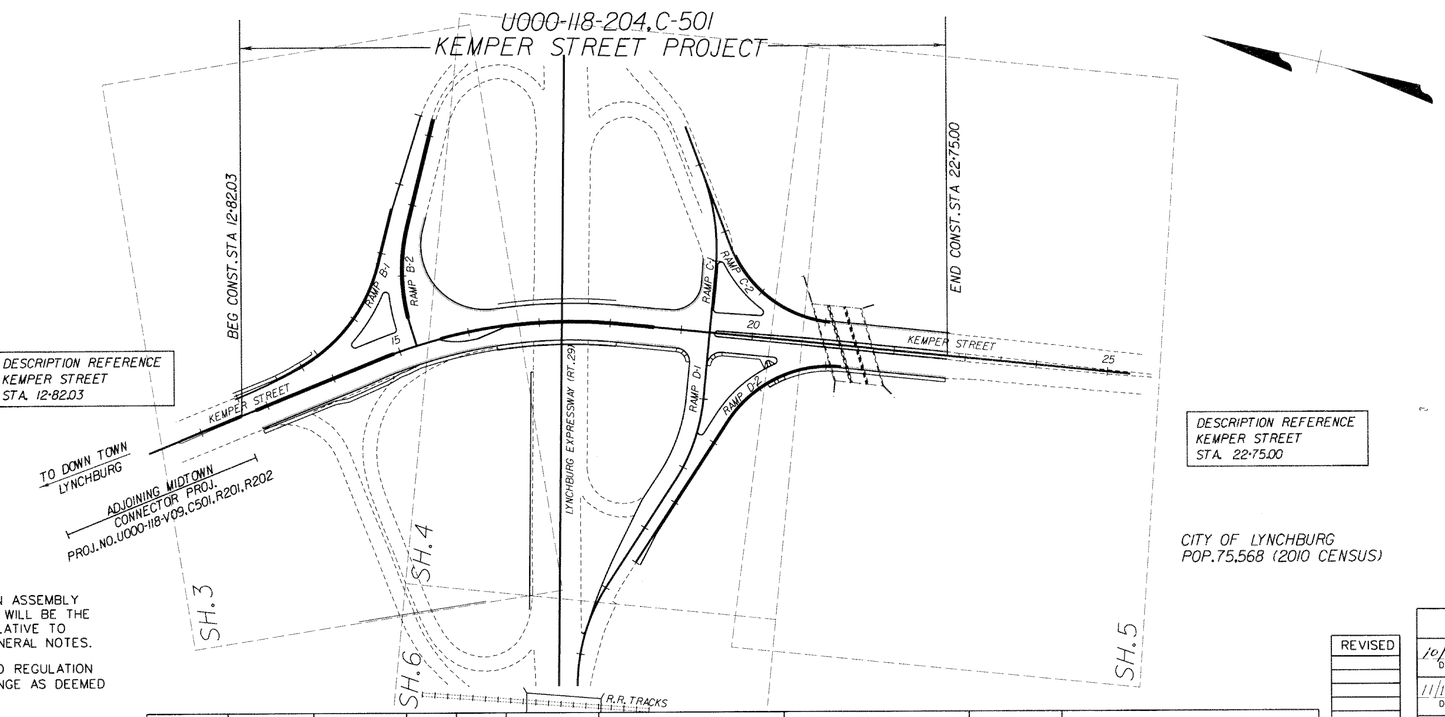

DESCRIPTION REFERENCE
KEMPER STREET
STA. 12+82.03

DESCRIPTION REFERENCE
KEMPER STREET
STA. 22+75.00

CITY OF LYNCHBURG
POP. 75,568 (2010 CENSUS)

SCALE 0 100' 200'

CONVENTIONAL SIGNS

STATE LINE
COUNTY LINE
CITY, TOWN OR VILLAGE
RIGHT OF WAY LINE
FENCE LINE
UNFENCED PROPERTY LINE
FENCED PROPERTY LINE
WATER LINE
SANITARY SEWER LINE
GAS LINE
ELECTRIC UNDERGROUND CABLE
TRAVELED WAY
GUARD RAIL
RETAINING WALL
RAILROADS
BASE OR SURVEY LINE
LEVEE OR EMBANKMENT
BRIDGES
CULVERTS
DROP INLET
POWER POLES
TELEPHONE OR TELEGRAPH POLES
TELEPHONE OR TELEGRAPH LINES
HEDGE
TREES
HEAVY WOODS
GROUND ELEVATION
GRADE ELEVATION

THE COMPLETE ELECTRONIC.TIF VERSION OF THE PLAN ASSEMBLY AS AWARDED, INCLUDING ALL SUBSEQUENT REVISIONS, WILL BE THE OFFICIAL CONSTRUCTION PLANS. FOR INFORMATION RELATIVE TO ELECTRONIC FILES AND LAYERED PLANS, SEE THE GENERAL NOTES.

DESIGN FEATURES RELATING TO CONSTRUCTION OR TO REGULATION AND CONTROL OF TRAFFIC MAY BE SUBJECT TO CHANGE AS DEEMED NECESSARY BY THE DEPARTMENT.

THIS PROJECT IS TO BE CONSTRUCTED IN ACCORDANCE WITH THE DEPARTMENT'S 2007 ROAD AND BRIDGE SPECIFICATIONS, 2008 ROAD AND BRIDGE STANDARDS, 2011 WORK AREA PROTECTION MANUAL AND AS AMENDED BY CONTRACT PROVISIONS AND THE COMPLETE ELECTRONIC .TIF VERSION OF THE PLAN ASSEMBLY.

ALL CURVES ARE TO BE SUPERELEVATED, TRANSITIONED AND WIDENED IN ACCORDANCE WITH STANDARD TC-5.01U, EXCEPT WHERE OTHERWISE NOTED.

THE ORIGINAL APPROVED TITLE SHEET(S), INCLUDING ORIGINAL SIGNATURES, ARE FILED IN THE VDOT CENTRAL OFFICE PLAN LIBRARY. ANY MISUSE OF ELECTRONIC FILES, INCLUDING SCANNED SIGNATURES, IS ILLEGAL AND ENFORCED TO THE FULL EXTENT OF THE LAW.

STATE PROJECT NO.	SECTION	FEDERAL AID PROJECT NO.	TYPE CODE	UPC NO.	EQUALITIES FEET	LENGTH INCLUDING BRIDGE FEET	LENGTH INCLUDING BRIDGE MILES	LENGTH EXCLUDING BRIDGE FEET	LENGTH EXCLUDING BRIDGE MILES	TYPE PROJECT	DESCRIPTION
U000-118-204	C-501			94745		992.97	0.188	823.29	0.156	CONST.	Fr: 255' SOUTH OF 16TH STREET To: 0.10 MILE SOUTH OF LYNCHBURG EXPRESSWAY (RT. 29) AT RAILROAD OVERPASS

REVISED

APPROVED FOR CONSTRUCTION BY THE CITY OF LYNCHBURG, VA.

10/25/13 DATE — CITY ENGINEER
11/14/13 DATE — CITY CONSTRUCTION MANAGER
11/14/13 DATE — UTILITIES ENGINEER
11/14/13 DATE — E&S CONTROL ~~ADMINISTRATOR~~ INSPECTOR

SUPERVISED BY CITY OF LYNCHBURG
PROJECT MANAGER STEVE CAMPBELL, MATTERN & CRAIG (540)-345-9342
SURVEYED BY MATTERN & CRAIG, (540)-345-9342
DESIGNED BY MICHAEL AGEE, MATTERN & CRAIG, (540) 345-9342

PRINTS SENT TO		NO.	DATE
R/W DIV.	ADVANCE PLANS		
	COMPLETED PLANS		
DIST. ENGR.	ADVANCE PLANS		
	COMPLETED PLANS		
	FOR UTILITIES		
RES. ENGR.	ADVANCE PLANS		
	COMPLETED PLANS		
CONSTR. ENGR.			

Copyright 2013, Commonwealth of Virginia

CODE NO. 6010

PLAN NO.	PROJECT	FILE NO.	SHEET NO.
	U000-118-204		1

SUPERVISED BY CITY OF LYNCHBURG
PROJECT MANAGER STEVE CAMPBELL, MATTERN & CRAIG (540)-345-9342
SURVEYED BY MATTERN & CRAIG (540)-345-9342
DESIGNED BY MIKE AGEE, MATTERN & CRAIG

REVISED	STATE	STATE ROUTE	STATE PROJECT	SHEET NO.
	VA.	29	U000-118-204, C-501	1A

DESIGN FEATURES RELATING TO CONSTRUCTION OR TO REGULATION AND CONTROL OF TRAFFIC MAY BE SUBJECT TO CHANGE AS DEEMED NECESSARY BY THE DEPARTMENT

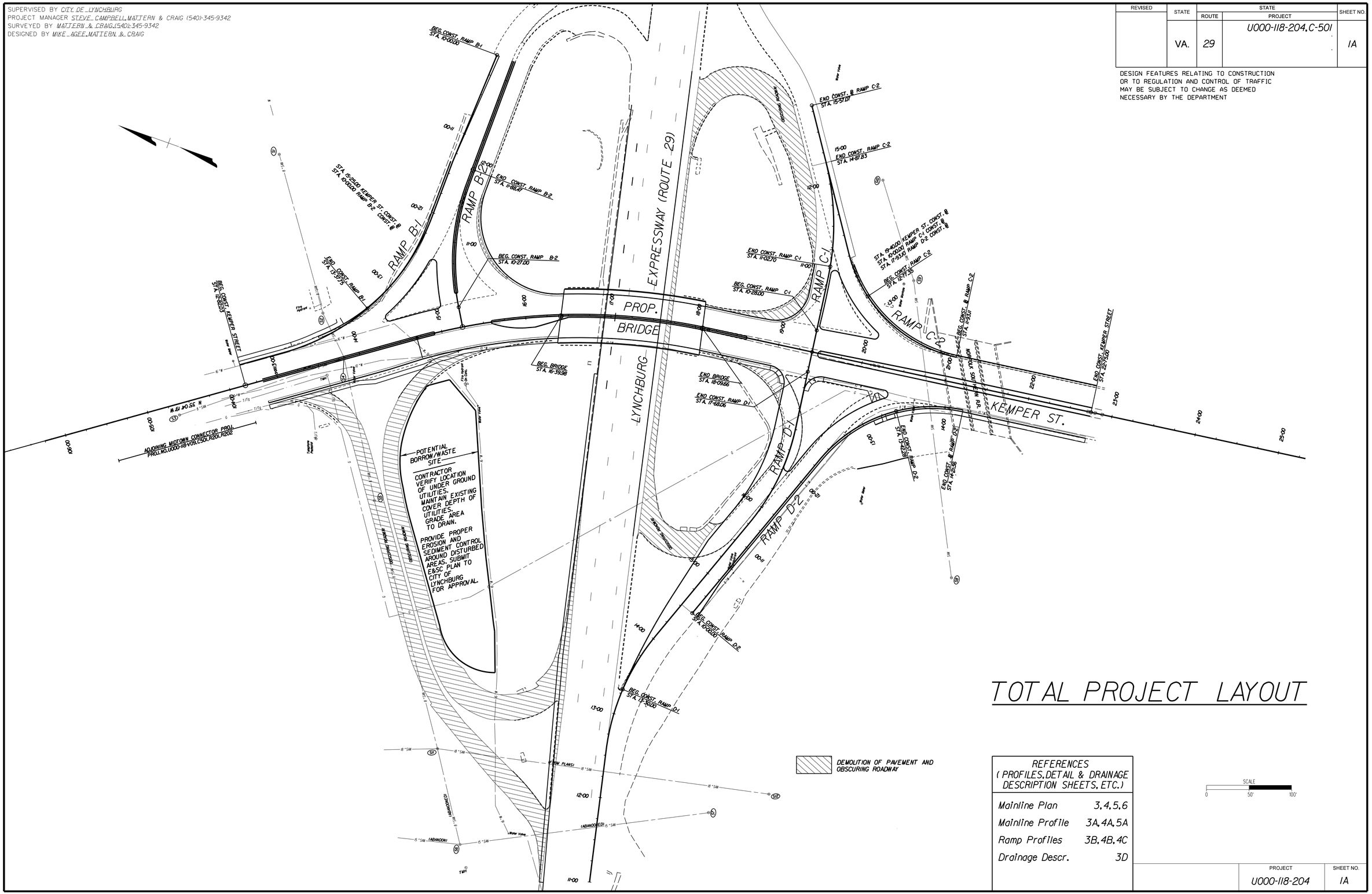

TOTAL PROJECT LAYOUT

REFERENCES (PROFILES, DETAIL & DRAINAGE DESCRIPTION SHEETS, ETC.)	
Mainline Plan	3, 4, 5, 6
Mainline Profile	3A, 4A, 5A
Ramp Profiles	3B, 4B, 4C
Drainage Descr.	3D

SCALE 0 50' 100'

PROJECT	SHEET NO.
U000-118-204	1A

SUPERVISED BY CITY OF LYNCHBURG
PROJECT MANAGER STEVE CAMPBELL, MATTERN & CRAIG (540)-345-9342
SURVEYED BY MATTERN & CRAIG (540)-345-9342
DESIGNED BY MIKE AGEE, MATTERN & CRAIG

INDEX OF SHEETS

REVISED	STATE	STATE ROUTE	STATE PROJECT	SHEET NO.
	VA.	29	U000-118-204, C-501	1B

SHEET NO.	DESCRIPTION
1	TITLE SHEET
1A	TOTAL PROJECT LAYOUT
1B	INDEX OF SHEETS
1C	REVISION DATA SHEET
1D	SURVEY ALIGNMENT DATA SHEET
1E	CONSTRUCTION ALIGNMENT DATA SHEET
1F	95' CADD LEVEL STRUCTURE
1G(1) - 1G(10)	MAINTENANCE OF TRAFFIC
2, 2A, 2B	TYPICAL SECTIONS
2C	DITCH DETAILS
2D	GENERAL NOTES
2E(1)	EROSION CONTROL SUMMARY
2E(2)	DRAINAGE SUMMARY
2E(3)	PAVEMENT SUMMARY
2E(4)	INCIDENTAL SUMMARY
2E(5)	ROADSIDE DEVELOPMENT
2E(6)	GRADING SUMMARY
2F(1) - 2F(12)	RAIN GARDEN AND LANDSCAPE PLANS
2G(1) - 2G(7)	INSERTABLE VDOT ROAD AND BRIDGE STANDARDS
3, 3A, 3B	PLAN AND PROFILE STA. 12+82.03 TO STA. 16+30
3C	NOT USED
3D	DRAINAGE DESCRIPTION
3E	GRADING SHEET
4, 4A, 4B, 4C	PLAN AND PROFILE STA. 16+30 TO STA. 20+60
4D	GRADING SHEET
5, 5A	PLAN AND PROFILE STA. 20+60 TO STA. 22+75
6	PLAN (RTE. 29)
6A	DITCH PROFILES
7(1) - 7(34)	BRIDGE SHEETS
8(1) - 8(9)	PAVEMENT MARKING AND SIGN PLANS
9(1) - 9(3)	SIGNAL PLANS
10	NOT USED
11(1) - 11(6)	UTILITY PLANS
12(1) - 12(6)	LIGHTING PLANS
13(1) - 13(6)	EROSION CONTROL PLANS AND NOTES
14(1A) - 14(5)	DRAINAGE MAPS - INFORMATION ONLY

TOTAL CROSS SECTION SHEETS 51 (SEE CROSS SECTION SHEET NUMBER 1 FOR INDEX OF SHEETS)

SUPERVISED BY CITY OF LYNCHBURG
PROJECT MANAGER STEVE CAMPBELL, MATTERN & CRAIG (540)-345-9342
SURVEYED BY MATTERN & CRAIG (540)-345-9342
DESIGNED BY MIKE AGEE, MATTERN & CRAIG

REVISION DATA SHEET

REVISED	STATE	STATE ROUTE	STATE PROJECT	SHEET NO.
	VA.	29	U000-118-204, C-501	IC

State Project:
Federal Project:
From: 235' SOUTH OF 16TH STREET
To: 0.10 MILE SOUTH OF LYNCHBURG EXPRESSWAY (RT.29) AT RAILROAD OVERPASS

DESIGN FEATURES RELATING TO CONSTRUCTION
OR TO REGULATION AND CONTROL OF TRAFFIC
MAY BE SUBJECT TO CHANGE AS DEEMED
NECESSARY BY THE DEPARTMENT

PROJECT	SHEET NO.
U000-118-204	IC

SUPERVISED BY CITY OF LYNCHBURG
PROJECT MANAGER STEVE CAMPBELL,MATTERN & CRAIG (540)-345-9342
SURVEYED BY MATTERN & CRAIG (540)-345-9342
DESIGNED BY MIKE AGEE,MATTERN & CRAIG

SURVEY ALIGNMENT DATA SHEET

COMMONWEALTH OF VIRGINIA
MICHAEL S. AGEE
Lic. No. 015232
PROFESSIONAL ENGINEER

MATTERN & CRAIG, INC
Roanoke, Virginia
(ROADWAY ENGINEER)

REVISED	STATE	STATE ROUTE	STATE PROJECT	SHEET NO.
	VA.	29	U000-118-204,C-501	ID

DESIGN FEATURES RELATING TO CONSTRUCTION OR TO REGULATION AND CONTROL OF TRAFFIC MAY BE SUBJECT TO CHANGE AS DEEMED NECESSARY BY THE DEPARTMENT

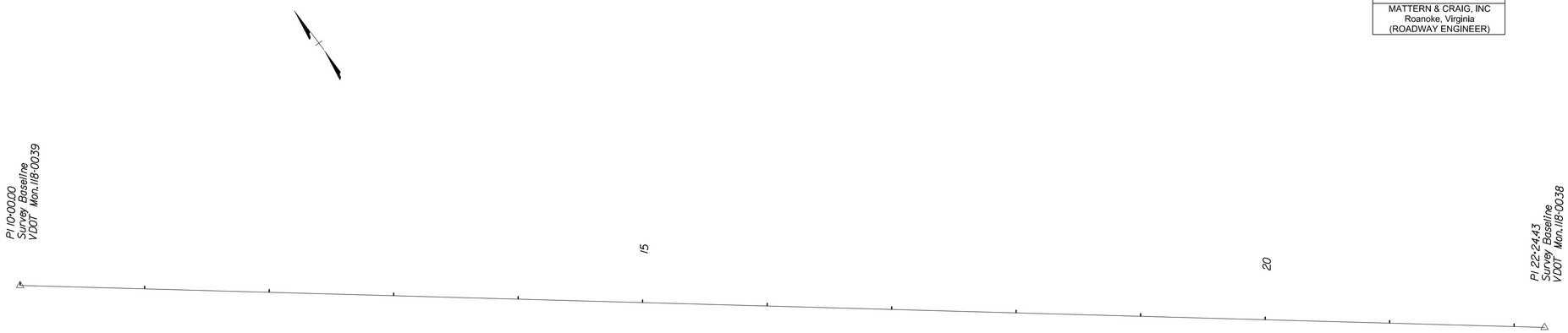

CONTROL STATION ID. 118-0039
ROUTE U000 CITY OF LYNCHBURG
ESTABLISHED BY R. T. CLARK YEAR 1990
VERTICAL DATUM BASED ON USGS ELEV. 700.72
HORIZONTAL DATUM BASED ON NAD 83
Va STATE PLANE COORDINATES
NAD 1983 METRIC VALUES S ZONE
Va DEPT. TRANS. PROJECT COORDINATES
X (EAST) 3,092,039.985
Y (NORTH) 388,994.340

DETAILED DESCRIPTION

A standard metal VDOT disk set in concrete flush with ground and stamped 118-0039. To reach the station from the intersection of Route 29 and Kemper Street, proceed northwest on Kemper Street for 216 feet. Monument is located 127.9'from edge of bridge.

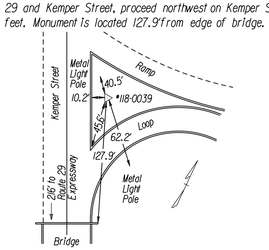

CONTROL STATION ID. 118-0038
ROUTE U000 CITY OF LYNCHBURG
ESTABLISHED BY R. T. CLARK YEAR 1990
HORIZONTAL DATUM BASED ON NAD 83
Va STATE PLANE COORDINATES
NAD 1983 METRIC VALUES S ZONE
Va DEPT. TRANS. PROJECT COORDINATES
X (EAST) 3,093,263.949
Y (NORTH) 388,960.539

DETAILED DESCRIPTION

A standard metal VDOT disk set in concrete flush with ground and stamped 118-0038. To reach station from the intersection of Route 29 and Kemper Street, proceed north on Route 29 for 0.2 mile. Monument is located 79'east of Route 29, top of hill.

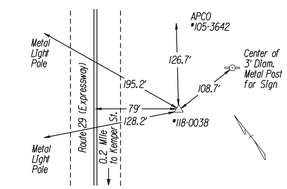

PROJECT	SHEET NO.
U000-118-204	ID

SUPERVISED BY CITY OF LYNCHBURG
PROJECT MANAGER STEVE CAMPBELL, MATTERN & CRAIG (540)-345-9342
SURVEYED BY MATTERN & CRAIG (540)-345-9342
DESIGN BY MIKE AGEE, MATTERN & CRAIG

CONSTRUCTION ALIGNMENT DATA SHEET

COMMONWEALTH OF VIRGINIA
MICHAEL S. AGEE
Lic. No. 015232
PROFESSIONAL ENGINEER

MATTERN & CRAIG, INC
Roanoke, Virginia
(ROADWAY ENGINEER)

REVISED	STATE	STATE ROUTE	STATE PROJECT	SHEET NO.
	VA.	29	U000-118-204, C-501	1E

DESIGN FEATURES RELATING TO CONSTRUCTION OR TO REGULATION AND CONTROL OF TRAFFIC MAY BE SUBJECT TO CHANGE AS DEEMED NECESSARY BY THE DEPARTMENT

HORIZONTAL ALIGNMENT LIST
FOR - KEMPER ST.
COMPUTATIONS BASED ON ARC DEFINITION

P.J.						NORTH (Y)	EAST (X)
1	12+82.03	POT				389175.5414	3091866.6587
			TL = 186.74	S 35° 04' 19" E	PI/PI = 363.38 FT.		
2	14+68.77	PC	TS = 176.65	TD = 8° 00' 00"		389022.7104	3091973.9582
2	16+45.41	PI	LC = 346.38	CD = 8° 00' 00"		388878.1362	3092075.4607
2	18+15.15	PT	TS = 176.65	RAD = 716.20	DC = 27° 42' 38" (RT)	388702.9443	3092098.0940
			TL = 459.85	S 7° 21' 41" E	PI/PI = 636.50 FT.		
3	22+75.00	POT				388246.8830	3092157.0131
			TL = 257.00	S 7° 21' 41" E	PI/PI = 257.00 FT.		
4	25+32.00	POT				387992.0051	3092189.9410

HORIZONTAL ALIGNMENT LIST
FOR ROADWAY RAMP B-1
COMPUTATIONS BASED ON ARC DEFINITION

P.J.						NORTH (Y)	EAST (X)
1	10+00.00	POT				389041.2902	3092318.8217
			TL = 136.23	N 85° 44' 02" W	PI/PI = 136.23		
2	11+36.23	PI				389051.4240	3092182.9730
			TL = 80.38	N 89° 03' 22" W	PI/PI = 180.94		
3	12+16.61	PC	TS = 100.56	TD = 47° 45' 40"		389052.7480	3092102.6030
3	13+17.17	PI	LC = 189.34	CD = 47° 45' 40"		389054.4044	3092002.0541
3	14+05.95	PCC	TS = 100.56	RAD = 227.14	DC = 25° 13' 29.5" (RT)	389129.9597	3091935.6893
			TL = 0.00	N 41° 17' 42" W	PI/PI = 149.49		
4	14+05.95	PCC	TS = 48.92	TD = 6° 13' 23"		389129.9597	3091935.6893
4	14+54.87	PI	LC = 97.75	CD = 6° 13' 23"		389166.7188	3091903.4014
4	15+03.70	PT	TS = 48.92	RAD = 900.00	DC = 6° 21' 58" (RT)	389206.7578	3091875.2907

HORIZONTAL ALIGNMENT LIST
FOR ROADWAY RAMP B-2
COMPUTATIONS BASED ON ARC DEFINITION

P.J.						NORTH (Y)	EAST (X)
1	10+00.00	POT				388975.4664	3092004.4312
			TL = 27.00	N 59° 25' 36" E	PI/PI = 27.00		
2	10+27.00	POT				388988.1824	3092025.9557
			TL = 00.80	N 59° 25' 36" E	PI/PI = 00.80		
3	10+27.80	PC	TS = 73.37	TD = 22° 02' 13"		388989.6078	3092028.3685
3	11+01.17	PI	LC = 143.02	CD = 22° 02' 13"		389026.9263	3092091.5380
3	11+70.82	PT	TS = 73.37	RAD = 260.00	DC = 31° 31' 01" (RT)	389025.7177	3092164.8975
			TL = 153.65	S 89° 03' 22" E	PI/PI = 227.02		
4	13+24.47	POT				389023.1867	3092318.5268

HORIZONTAL ALIGNMENT LIST
FOR ROADWAY RAMP C-1
COMPUTATIONS BASED ON ARC DEFINITION

P.J.						NORTH (Y)	EAST (X)
1	10+00.00	POT				388579.1219	3092114.0907
			TL = 28.00	N 82° 38' 19" E	PI/PI = 28.00		
2	10+28.00	POT				388582.3250	3092138.8847
			TL = 60.28	N 82° 38' 19" E	PI/PI = 138.14		
3	10+88.28	PC	TS = 69.85	TD = 19° 05' 55"		388590.4333	3092201.6463
	11+02.70	POC				388592.6238	3092215.8976
3	11+58.14	PI	LC = 137.26	CD = 19° 05' 55"		388599.3834	3092270.9243
3	12+25.55	PT	TS = 69.85	RAD = 300.00	DC = 26° 12' 54" (LT)	388638.0161	3092329.1230

HORIZONTAL ALIGNMENT LIST
FOR ROADWAY RAMP C-2
COMPUTATIONS BASED ON ARC DEFINITION

P.J.						NORTH (Y)	EAST (X)
2	11+93.11	PC	TS = 103.75	TD = 34° 18' 33"		388413.6325	3092159.6699
	12+77.35	POC				388500.1175	3092175.3842
2	12+85.94	PI	LC = 185.67	CD = 34° 18' 33"		388516.6936	3092146.3554
2	13+78.78	PT	TS = 103.75	RAD = 167.00	DC = 63° 42' 04" (RT)	388574.1653	3092232.9342
			TL = 109.05	N 56° 25' 25" E	PI/PI = 212.80		
3	14+87.83	POT				388638.0161	3092329.1230
			TL = 69.24	N 56° 25' 25" E	PI/PI = 69.24		
4	15+57.07	POT				388669.2919	3092376.2387

HORIZONTAL ALIGNMENT LIST
FOR ROADWAY RAMP D-1
COMPUTATIONS BASED ON ARC DEFINITION

P.J.						NORTH (Y)	EAST (X)
1	10+00.00	POT				388595.4967	3091342.5228
			TL = 256.64	N 77° 37' 57" E	PI/PI = 332.44		
2	12+56.64	PC	TS = 75.80	TD = 22° 02' 13"		388648.5113	3091593.6396
2	13+32.44	PI	LC = 147.51	CD = 22° 02' 13"		388666.6998	3091667.2522
2	14+04.16	PT	TS = 75.80	RAD = 260.00	DC = 32° 30' 25" (RT)	388640.6021	3091738.4159
			TL = 172.67	S 69° 51' 38" E	PI/PI = 312.08		
3	15+76.82	PC	TS = 63.62	TD = 22° 02' 13"		388581.1535	3091900.5218
3	16+40.44	PI	LC = 124.79	CD = 22° 02' 13"		388559.2477	3091960.2550
3	17+01.61	PT	TS = 63.62	RAD = 260.00	DC = 27° 30' 02" (LT)	388567.3995	3092023.3539
			TL = 66.45	N 82° 38' 19" E	PI/PI = 130.07		
4	17+68.06	POT				388575.9134	3092089.2554
			TL = 25.04	N 82° 38' 19" E	PI/PI = 25.04		
5	17+93.10					388579.1219	3092114.0907

HORIZONTAL ALIGNMENT LIST
FOR ROADWAY RAMP D-2
COMPUTATIONS BASED ON ARC DEFINITION

P.J.						NORTH (Y)	EAST (X)
1	10+00.00	POT				388608.9831	3091778.1647
			TL = 234.83	S 69° 51' 38" E	PI/PI = 338.59		
2	12+34.83	PC	TS = 103.76	TD = 33° 30' 23"		388528.1314	3091998.6332
2	13+38.59	PI	LC = 186.53	CD = 33° 30' 23"		388492.4050	3092096.0528
	13+42.28	POC				388462.8579	3092081.7584
2	14+21.36	PT	TS = 103.76	RAD = 171.00	DC = 62° 29' 57" (RT)	388389.4963	3092109.3477

HORIZONTAL ALIGNMENT LIST
FOR ROADWAY ROUTE 29 (LYNCHBURG EXPRESSWAY)

P.J.				NORTH (Y)	EAST (X)
1	10+00.00	POT		388603.7005	3091256.6585
			TL = 1500.00 N 77° 37' 56" E		
2	25+00.00	POT		388924.9767	3092721.8495

NOTE:

SEE PLAN SHEETS FOR COMPLETE CENTERLINE CURVE AND SUPERELEVATION DATA.

PROJECT	SHEET NO.
U000-118-204	1E

SUPERVISED BY CITY OF LYNCHBURG
PROJECT MANAGER STEVE CAMPBELL MATTERN & CRAIG (540)-345-9342
SURVEYED BY MATTERN & CRAIG (540)-345-9342
DESIGNED BY MIKE AGEE MATTERN & CRAIG

'95 CADD LEVEL STRUCTURE

REVISED	STATE	ROUTE	PROJECT	SHEET NO.
	VA.	29	U000-118-204, C-501	IF

DESIGN FEATURES RELATING TO CONSTRUCTION OR TO REGULATION AND CONTROL OF TRAFFIC MAY BE SUBJECT TO CHANGE AS DEEMED NECESSARY BY THE DEPARTMENT

SURVEY

LEVEL 1	CENTERLINE, TRAVERSE, CONTROL STATION
LEVEL 2	BRIDGES
LEVEL 3	EDGE OF PAVEMENT, GRAVEL, CONCRETE, ASPHALT PARKING LOT
LEVEL 4	CURB AND GUTTER
LEVEL 5	CURB & CONCRETE ISLANDS
LEVEL 6	PAVED & GRAVEL SHOULDER
LEVEL 7	SIDEWALK (ALONG ROADS); WHEELCHAIR RAMPS
LEVEL 8	BUILDINGS, PORCHES, DECKS, PATIOS & SWIMMING POOLS
LEVEL 9	WALKS (AROUND HOUSES & BUILDINGS)
LEVEL 10	STEPS
LEVEL 11	FENCES & GATES
LEVEL 12	WOOD LINE, TREES, SHRUBS, HEDGEROWS
LEVEL 13	RETAINING WALLS
LEVEL 14	CONCRETE SLABS, BALLARDS, COLUMNS, SIGNS, POSTS, GAS ISLANDS & PLAYSETS
LEVEL 15	ABOVE GROUND TANKS, DUMPSTERS, PROPANE TANKS
LEVEL 16	GUARDRAIL & JERSEY BARRIER
LEVEL 17	BODIES OF WATER, STREAMS, LAKES, ETC.
LEVEL 18	PAVED DITCHES, RIPRAP
LEVEL 19	DRAINAGE ITEMS DAMS, ENDWALLS & ENDSECTIONS CATCH BASINS, DROP INLETS & DI MANHOLES CULVERT PIPES
LEVEL 20	ALL RAILROAD ITEMS, RAILROAD TIES
LEVEL 21	SEPTIC TANKS, DRAIN FIELDS, WELLS
LEVEL 22	CEMETERY LOCATION & GRAVES
LEVEL 23	RIGHT OF WAY AND RIGHT OF WAY MONUMENTS
LEVEL 24	PROPERTY LINES, TEMPORARY EASEMENT, PERMANENT EASEMENT, PROPERTY PINS
LEVEL 25	STATE, COUNTY AND CITY BOUNDARY LINES
LEVEL 26	UTILITY EASEMENTS
LEVEL 27	WELANDS
LEVEL 28	GAS PUMPS, GAS TANKS, FILLER CAPS, MONITORING WELLS, VENT PIPES, ETC.
LEVEL 29	MINE INFORMATION
LEVEL 30	EXISTING NOISE BARRIER WALLS
LEVEL 31-60	ANNOTATION FOR LEVELS 1 - 30
LEVEL 61	TRAFFIC SIGNES IN R/W, BASE PLAN SHEET, NORTH ARROW, SCALE BAR, ETC.
LEVEL 62	GRID AND LABELS; ELEVATION TICKS, PROJECT NOTES
LEVEL 63	NOT ASSIGNED

NOTE: Survey Utility Information will be in a separate file. Digital Terrain Model information will be in separate files.

DESIGN

LEVEL 1	BASELINE & SUB-TANGENTS
LEVEL 2	BRIDGES
LEVEL 3	EDGE OF PAVEMENT & PRIVATE ENTRANCES
LEVEL 4	CURB AND GUTTER
LEVEL 5	CURB
LEVEL 6	PAVED SHOULDER
LEVEL 7	SIDEWALK AND/OR BICYCLE TRAIL
LEVEL 8	NOT ASSIGNED
LEVEL 9	NOT ASSIGNED
LEVEL 10	STEPS
LEVEL 11	FENCES
LEVEL 12	DIRECTIONAL ARROWS, PAVEMENT STRIPING & FLUSH MEDIAN DELINEATION
LEVEL 13	RETAINING WALLS
LEVEL 14	CONCRETE SLABS, COLUMNS, SIGNS, POSTS
LEVEL 15	NOT ASSIGNED
LEVEL 16	GUARDRAIL & JERSEY BARRIER
LEVEL 17	NOT ASSIGNED
LEVEL 18	PAVED DITCHES
LEVEL 19	RESERVED FOR MISC. DRAIN. ITEMS TO BE PLACED BY ROAD DESIGNERS
LEVEL 20	RAILROADS, ETC.
LEVEL 21	NOT ASSIGNED
LEVEL 22	LIMITS OF CONSTRUCTION
LEVEL 23	RIGHT-OF-WAY, TEMP. & PERM. EASEMENTS
LEVEL 24	NOT ASSIGNED
LEVEL 25-29	NOT ASSIGNED
LEVEL 30	PROPOSED NOISE BARRIER WALLS & ANNOTATION
LEVEL 31-54	ANNOTATION FOR LEVELS 1 - 24
LEVEL 55-60	NOT ASSIGNED
LEVEL 61	BASE PLAN SHEET, SCALE BAR, NORTH ARROW, MATCH LINES, SEALING & SIGNING BLOCKS
LEVEL 62	NOT ASSIGNED
LEVEL 63	NOT ASSIGNED

HYDRAULICS - DRAINAGE

LEVEL 1	PIPES FROM 4" TO 42" (CUSTOM LINE STYLES)
LEVEL 2	PIPES 48" AND LARGER (CUSTOM LINE STYLE)
LEVEL 3	STANDARD BOX CULVERTS LC=0, WT=5
LEVEL 4	ENDWALLS (CELLS)
LEVEL 5	END SECTIONS (CELLS)
LEVEL 6	DITCHES AND FLUMES WT=4, LC=0 (CUSTOM LINE STYLE)
LEVEL 7	ENERGY DISSIPATORS, PIPE SPILLOUT AND SPRING BOXES (CELLS)
LEVEL 8	MANHOLES AND JUNCTION BOXES (CELLS)
LEVEL 9	DROP INLETS DI-1, DI-5 AND DI-9 SERIES (CELLS)
LEVEL 10	DROP INLETS DI-2 SERIES (CELLS)
LEVEL 11	DROP INLETS DI-3 SERIES (CELLS)
LEVEL 12	DROP INLETS DI-4 SERIES (CELLS)
LEVEL 13	DROP INLETS DI-7 SERIES (CELLS)
LEVEL 14	DROP INLETS DI-10 SERIES (CELLS)
LEVEL 15	DROP INLETS DI-11 AND DI-13 SERIES (CELLS)
LEVEL 16	DROP INLETS DI-12 SERIES (CELLS)
LEVEL 17	DROP INLETS DI-14 SERIES (CELLS)
LEVEL 18	SPECIAL DESIGN ITEMS (ENDWALLS, INLETS, ETC.)
LEVEL 19	UNDERDRAINS (CD-1 & 2, UD-1, UD-2, ETC.) (CUSTOM LINE STYLE)
LEVEL 20	UNDERDRAIN OUTLET PIPE AND EW-12 ENDSECTIONS (CUSTOM LINE STYLE & CELLS)
LEVEL 21	STONE & OUTLET PROTECTION (EC-1, RIPRAP CHANNEL, ETC.) (CELLS)
LEVEL 22	SWM BASIN ITEMS (BASIN, RISERS, WEIRS, ETC.)
LEVEL 23	SWM BASIN (BASELINE/ALIGNMENT)
LEVEL 24	SWM BASIN (PLAN VIEW/CONTOURS)
LEVEL 25	SWM BASIN (MISCELLANEOUS/ITEMS)
LEVEL 26	SWM BASIN (DESCRIPTIONS/NOTES)
LEVEL 27	TYPICAL DITCH DETAILS
LEVEL 28-30	NOT ASSIGNED
LEVEL 31-60	ANNOTATION FOR LEVELS 1 - 30 NOTE: ALL DRAINAGE STRUCTURE LABELS ON LEVEL 31
LEVEL 61	BASE PLAN SHEET, SCALE BAR, NORTH ARROW, MATCH LINES, ETC. WT= 5, LC= 0
LEVEL 62	NOT ASSIGNED
LEVEL 63	PROJECT NOTES

EROSION & SEDIMENT CONTROL

LEVEL 1	PHASE I - EROSION CONTROL ITEMS (TFB, TSF, TURB. CURTAIN) (CUSTOM LINE STYLE)
LEVEL 2	PHASE I - EROSION CONTROL DITCH ITEMS (EC-2, EC-3, ETC.)(CUSTOM LINE STYLE)
LEVEL 3	PHASE I - EROSION CONTROL STONE (EC-1, RIPRAP, CHECK DAMS) (CELLS)
LEVEL 4	PHASE I - EROSION CONTROL ITEMS (SEDIMENT TRAPS & BASINS)
LEVEL 5	PHASE I - EROSION CONTROL ITEMS (DIVERSION DIKES & DITCHES) (CUSTOM LINE STYLE)
LEVEL 6	PHASE I - EROSION CONTROL ITEMS (TEMPORARY DIVERSION CHANNELS) (CUSTOM LINE STYLE)
LEVEL 7	PHASE I - EROSION CONTROL ITEMS (MISCELLANEOUS DIVERSION ITEMS)
LEVEL 8	PHASE I - EROSION CONTROL ITEMS (BRUSH BARRIERS, LEVEL SPREADERS, ETC.)
LEVEL 9	PHASE I - MISCELLANEOUS EROSION CONTROL ITEMS
LEVEL 10	PHASE I - TEMPORARY DRAINAGE (PIPES) (CUSTOM LINE STYLE)
LEVEL 11	PHASE I - PROPOSED DRAINAGE (PIPES) (CUSTOM LINE STYLE)
LEVEL 12	PHASE I - PROPOSED DRAINAGE (SWM)
LEVEL 13	PHASE I - EXISTING CONTOURS (LC= 1, WT= 1)
LEVEL 14	PHASE I - PROPOSED CONTOURS
LEVEL 15	PHASE I - SYMBOLS, LEGEND AND NOTES
LEVEL 16	PHASE II - EROSION CONTROL ITEMS (TFB, TSF, TURB. CURTAIN) (CUSTOM LINE STYLE)
LEVEL 17	PHASE II - EROSION CONTROL DITCH ITEMS (EC-2, EC-3, ETC.)(CUSTOM LINE STYLE)
LEVEL 18	PHASE II - EROSION CONTROL STONE (EC-1, RIPRAP, CHECK DAMS) (CELLS)
LEVEL 19	PHASE II - EROSION CONTROL ITEMS (SEDIMENT TRAPS & BASINS)
LEVEL 20	PHASE II - EROSION CONTROL ITEMS (DIVERSION DIKES & DITCHES) (CUSTOM LINE STYLE)
LEVEL 21	PHASE II - EROSION CONTROL ITEMS (TEMPORARY DIVERSION CHANNELS) (CUSTOM LINE STYLE)
LEVEL 22	PHASE II - EROSION CONTROL ITEMS (MISCELLANEOUS DIVERSION ITEMS)
LEVEL 23	PHASE II - EROSION CONTROL ITEMS (BRUSH BARRIERS, LEVEL SPREADERS, ETC.)
LEVEL 24	PHASE II - MISCELLANEOUS EROSION CONTROL ITEMS
LEVEL 25	PHASE II - TEMPORARY DRAINAGE (PIPES) (CUSTOM LINE STYLE)
LEVEL 26	PHASE II - PROPOSED DRAINAGE (PIPES) (CUSTOM LINE STYLE)
LEVEL 27	PHASE II - PROPOSED DRAINAGE (SWM)
LEVEL 28	PHASE II - EXISTING CONTOURS (LC= 1, WT= 1)
LEVEL 29	PHASE II - PROPOSED CONTOURS
LEVEL 30	PHASE II - SYMBOLS, LEGEND AND NOTES
LEVEL 31-60	ANNOTATION FOR LEVELS 1 - 30
LEVEL 61	BASE PLAN SHEET, SCALE BAR, NORTH ARROW, ETC. WT= 5, LC= 0
LEVEL 62	NOT ASSIGNED
LEVEL 63	PROJECT NOTES

TRAFFIC ENGINEERING

LEVEL 1	PROPOSED AND EXISTING SIGNAL FACES & NUMBERS SIGN FACES & NUMBERS (Legend)
LEVEL 2	PROPOSED UNDERGROUND SIGNAL EQUIPMENT CONDUIT, JUNCTION BOXES, MANHOLES
LEVEL 3	UNDERGROUND EQUIPMENT LABELS CONDUIT, WIRE, JUNCTION BOXES
LEVEL 4	PROPOSED ABOVE GROUND MINOR SIGNAL EQUIPMENT SIGNS ON SPANWIRE, MAST ARMS, POLES, SIGNAL HEADS, PEDESTRIAN PUSHBUTTONS, ETC.
LEVEL 5	ABOVE GROUND EQUIPMENT LABELS SIGNAL POLE LABELS SIGNAL HEAD LABELS, SIGN LABELS, PHASE INFO, SIGNAL POLE DETAIL
LEVEL 6	PROPOSED LOOPS/VIDEO DETECTION ZONES LOOPS, VIDEO DETECTION ZONES, MICROLOOP PROBE
LEVEL 7	SIGNAL CHARTS COLOR SEQUENCE CHART, PHASING DIAGRAM, PREEMPTION DIAGRAM, TIMING CHART
LEVEL 8	OVERHEAD UTILITY HEIGHT INFORMATION
LEVEL 9	EXISTING UNDERGROUND SIGNAL EQUIPMENT CONDUIT, JUNCTION BOXES, MANHOLES
LEVEL 10	EXISTING ABOVE GROUND MINOR SIGNAL EQUIPMENT POLE, MAST ARM, SPAN WIRE, SIGNAL HEADS, PEDESTRIAN PUSHBUTTONS, CONTROLLER/CABINET&FOUNDATION, ETC.
LEVEL 11	EXISTING LOOPS/VIDEO DETECTION ZONES LOOPS, VIDEO DETECTION ZONES, MICROLOOP PROBES
LEVEL 12	EXISTING PAVEMENT MARKINGS (LONGITUDINAL)
LEVEL 13	EXISTING TRANSVERSE MARKINGS (STOP BARS & CROSSWALKS)
LEVEL 14	EXISTING HATCHING
LEVEL 15	EXISTING LETTERS/ARROWS/SYMBOLS
LEVEL 16	GUARDRAIL AND JERSEY BARRIER
LEVEL 17	PROPOSED PAVEMENT MARKINGS (LONGITUDINAL)
LEVEL 18	PROPOSED TRANSVERSE MARKINGS (STOP BARS & CROSSWALKS)
LEVEL 19	PROPOSED HATCHING
LEVEL 20	PROPOSED LETTERS/ARROWS/SYMBOLS
LEVEL 21	PAVEMENT MARKINGS LABELS
LEVEL 22	DIRECTIONAL ARROWS (LANE ARRANGEMENTS ARROWS)
LEVEL 23	EXISTING AND PROPOSED ROW PROPOSED R/W FOR TCD's, LABELS AND LEADERS
LEVEL 24	EXISTING SIGN LOCATIONS INCLUDING STRUCTURES (SYMBOLS)
LEVEL 25	EXISTING SIGN FACES & LEADERS EXISTING SIGN FACES, EXISTING SIGN LEADERS, 'X' FOR EXISTING SIGNS TO BE REMOVED
LEVEL 26	PROPOSED SIGN LOCATIONS, INCLUDING STRUCTURES (SYMBOLS)
LEVEL 27	PROPOSED SIGN FACES & LEADERS, PROPOSED SIGN FACES, PROPOSED SIGN LEADERS
LEVEL 28	SIGN NUMBER/CALL-OUTS PROPOSED SIGN CALL-OUT, EXISTING SIGN CALL-OUT
LEVEL 29	SIGN DETAIL SHEET
LEVEL 30	SIGN SCHEDULE SHEET
LEVEL 31	OVERHEAD SIGN SUPPORT DATA SUMMARY & NOTES
LEVEL 32	VA AND VIA STRUCTURE SHEET
LEVEL 33	PROPOSED ABOVE GROUND EQUIPMENT POLES, LUMINAIRES, ARMS, ELECTRICAL SERVICE, CONTROL CENTER
LEVEL 34	PROPOSED UNDERGROUND EQUIPMENT CONDUIT, JUNCTION BOXES, FOUNDATIONS, DUCT CABLE
LEVEL 35	PROPOSED UNDER BRIDGE LIGHTING
LEVEL 36	LIGHTING LABELS POLE LOCATION LABEL, LUMINAIRE LABEL, CONDUIT/CABLE IDENTIFIER LABEL, EXIST. CONDUIT/CABLE IDENTIFIER LABLE
LEVEL 37	EXISTING ABOVE GROUND EQUIPMENT -- LIGHTING LUMINAIRES (INCLUDING UNDER BRIDGE), POLES, CONTROL CENTER, ELECTRICAL SERVICE, ARMS
LEVEL 38	EXISTING UNDERGROUND EQUIPMENT -- LIGHTING CONDUIT, JUNCTION BOXES, DUCT CABLE
LEVEL 39	SIGNAL LEGEND
LEVEL 40	SIGNAL POLE LEGEND
LEVEL 41	SIGNING LEGEND
LEVEL 42	PAVEMENT MARKING LEGEND
LEVEL 43	LIGHTING LEGEND
LEVEL 44	SUMMARY OF QUANTITIES
LEVEL 45	GENERAL NOTES & PLAN NOTES
LEVEL 46	LOCATION INFORMATION ROADWAY NAMES, BASELINE NAME, DIRECTIONAL ARROWS, DIRECTIONAL ARRON TEXT
LEVEL 47	DIMENSIONS, TERMINATORS
LEVEL 48	PROP. ABOVE GROUND MAJOR SIGNAL EQUIPMENT POLE - MAST ARM, COMBO MAST ARM, STRAIN, COMBO STRAIN, PF-2, PF-3 MAST ARM, SPAN WIRE, CONTROLLER/ CABINET & FOUNDATION, UTILITY POLES
LEVEL 49	EXIST. ABOVE GROUND MAJOR SIGNAL EQUIPMENT POLE - MAST ARM, COMBO MAST ARM, STRAIN, COMBO STRAIN, PF-2, PF-3 MAST ARM, SPAN WIRE, CONTROLLER/ CABINET & FOUNDATION, UTILITY POLES
LEVEL 50	'CLIP MASK' BOUNDARIES
LEVEL 51	'CLIP BOUNDARY' BOUNDARIES
LEVEL 52	PROPOSED SIGNAL POLES FOUNDATIONS
LEVEL 53	CLEARZONE TEMPLATES FOR SIGNAL/LIGHT POLES
LEVEL 54	SIGNAL HEAD SIGHT LINES - NB
LEVEL 55	SIGNAL HEAD SIGHT LINES - SB
LEVEL 56	SIGNAL HEAD SIGHT LINES - EB
LEVEL 57	SIGNAL HEAD SIGHT LINES - WB
LEVEL 58	SIGNAL DESIGNER WORKING LEVEL PAVEMENT MARKING LAYOUTS, SIGNAL WORKING LEVEL, LIGHTING WORKING LEVEL, SIGNING WORKING LEVEL
LEVEL 59	STAGING AREAS DIRECTIONAL BORE STAGING AREA, JACKING PIT - 20' PIPE SLEEVE JACKING PIT - 10' PIPE SLEEVE
LEVEL 60	BORDER TEXT - FILL-IN PRELIMINARY PLANS TITLE
LEVEL 61	SHEET INFORMATION NORTH ARROW, SCALE BAR, MATCHLINES, BORDER, STANDARD BORDER TEXT, VDOT LOGO, CONSULTANT LOGO
LEVEL 62	BORDER SNAP LOCATIONS
LEVEL 63	PRINT BOUNDARY

PROJECT	SHEET NO.
U000-118-204	IF

PROJECT MANAGER <STEVE_CAMPBELL_MATTERN & CRAIG (540)-345-9342>
SURVEYED BY <MATTERN & CRAIG (540)-345-9342>
DESIGN SUPERVISED BY <CITY OF LYNCHBURG>
DESIGNED BY <RANDY DODSON MATTERN & CRAIG>

TRANSPORTATION MANAGEMENT PLAN
MAINTENANCE OF TRAFFIC
NOTES AND DETAILS

COMMONWEALTH OF VIRGINIA
MICHAEL S. AGEE
Lic. No. 015232
PROFESSIONAL ENGINEER

MATTERN & CRAIG, INC
Roanoke, Virginia
(ROADWAY ENGINEER)

REVISED	STATE	STATE ROUTE	STATE PROJECT	SHEET NO.
	VA.	29	U000-118-204,C-501	IG(1)

DESIGN FEATURES RELATING TO CONSTRUCTION OR TO REGULATION AND CONTROL OF TRAFFIC MAY BE SUBJECT TO CHANGE AS DEEMED NECESSARY BY THE DEPARTMENT

1. ALL SIGNS, SIGN LAYOUT, TEMPORARY PAVEMENT MARKINGS, WORK ZONES AND ALL OTHER TRAFFIC CONTROL DEVICES SHALL CONFORM TO THE LATEST EDITIONS OF THE VIRGINIA WORK AREA PROTECTION MANUAL, MANUAL ON UNIFORM TRAFFIC CONTROL DEVICES, THE VIRGINIA SUPPLEMENT TO THE MUTCD, VDOT ROAD AND BRIDGE STANDARDS AND VDOT ROAD AND BRIDGE SPECIFICATIONS.

2. THE CONTRACTOR IS TO MAINTAIN TWO WAY TRAFFIC DURING CONSTRUCTION OF THE PROJECT UNLESS OTHERWISE APPROVED BY THE CITY OF LYNCHBURG. FOR CONNECTIONS AND ENTRANCES, MINIMUM WIDTH SHALL BE EITHER NO LESS THAN EXISTING CONDITIONS OR 11' MIN UNLESS OTHERWISE SHOWN ON PLANS.

3. THE CONTRACTOR SHALL SUBMIT A DETAILED MAINTENANCE OF TRAFFIC/SEQUENCE OF CONSTRUCTION PLAN FOR KEMPER STREET FOR REVIEW AND APPROVAL BY THE CITY OF LYNCHBURG. THE CONTRACTOR SHALL ALLOW A MINIMUM OF A TWO-WEEK REVIEW PERIOD. ANY MAJOR CHANGES IN PHASE OF CONTRUCTION WILL REQUIRE APPROVAL OF THE ENGINEER OF RECORD. MINOR ADJUSTMENTS OF THE MAINTENANCE OF TRAFFIC PLAN SHALL BE REVIEWED BY THE CITY TRANSPORTATION ENGINEER. EMERGENCY VEHICLE ACCESS IS TO BE MAINTAINED AT ALL TIMES FOR LOCAL RESIDENTS AND BUSINESSES.

4. THE CONTRACTOR SHALL COORDINATE WITH THE CITY OF LYNCHBURG FIRE AND RESCUE AS IT RELATES TO ALL ROAD CLOSURES OF ANY NATURE.

5. MAINTAIN TRAFFIC WITH AGGREGATE NO. 25 OR 26 FOR TEMPORARY TIES.

6. EXISTING SURFACE, AGGREGATE BASE AND SUBBASE MATERIAL WHICH WILL BE DEMOLISHED OR OBLITERATED DURING CONSTRUCTION AND WHICH IS SUITABLE FOR MAINTENANCE OF TRAFFIC, AS DETERMINED BY THE CITY, SHALL BE SALVAGED AND UTILIZED FOR MAINTENANCE OF TRAFFIC PRIOR TO THE USE OF COMMERCIAL MATERIAL. WHEN NOT SPECIFIED AS A SEPARATE PAY ITEM, THE REMOVAL AND SALVAGING OF EXISTING SURFACES AND AGGREGATE BASE MATERIAL WILL BE MEASURED AND PAID FOR AS REGULAR EXCAVATION IN ACCORDANCE WITH SECTION 303 OF THE VDOT SPECIFICATIONS.

7. THE CONTRACTOR SHALL PROVIDE TEMPORARY DRAINAGE TO PREVENT PONDING OF WATER ON THE ROADWAY AND ADJACENT PROPERTIES. ANY TEMPORARY DRAINAGE STRUCTURES INSTALLED ON THE PROJECT ARE THE CONTRACTOR'S RESPONSIBILITY. THE COST OF SUCH STRUCTURES IS TO BE INCLUDE IN THE COST OF OTHER ITEMS.

8. ONCE CONSTRUCTION IS STARTED ON A PHASE. THE WORK WILL BE COMPLETED ON THAT PHASE BEFORE PROCEEDING TO THE NEXT PHASE, OR AS DIRECTED BY THE CITY OF LYNCHBURG.

9. THE CONTRACTOR SHALL INSTALL TEMPORARY PAVEMENT PATCH OVER EXISTING MEDIAN REMOVAL AREA, UTILITY AND DRAINAGE PIPE TRENCHES IN PAVED ROADWAY AND/OR SHOULDER AREAS TO MAINTAIN A SMOOTH, FIRM TRAVEL SURFACE. TEMPORARY SURFACE PATCH SHALL CONSIST OF ASPHALT CONCRETE BASE COURSE TYPE BM-25.0A INSTALLED AT A MINIMUM 4" THICKNESS.

10. ALL UTILITY AND STORM DRAINAGE ASPHALT PATCHES SHALL BE PLACED PRIOR TO THE END OF THE WORK WEEK (FRIDAY).

11. TEMPORARY SHORING WORK WILL NOT BE MEASURED FOR SEPARATE PAYMENT BUT WILL BE INCLUDED IN THE PRICE BID FOR REGULAR EXCAVATION.

12. THE CONTRACTOR SHALL HAVE IN PLACE A MINIMUM OF FOUR (4) VARIABLE MESSAGE BOARDS AVAILABLE FOR USE AT THE DIRECTION OF THE CITY.

13. THE CONTRACTOR SHALL KEEP AT LEAST ONE SPARE IMPACT ATTENUATOR ON-SITE AT ALL TIMES TO REPLACE ANY DAMAGED IMPACT ATTENUATORS IMMEDIATELY.

14. AT THE END OF EACH WORK DAY, ALL AREAS IMMEDIATELY ADJACENT TO TRAFFIC THAT ARE EXCAVATED BELOW EXISTING SURFACE SHALL BE BACKFILLED TO FORM AN APPROXIMATE 3:1 WEDGE AGAINST THE PAVEMENT SURFACE FOR THE SAFETY AND PROTECTION OF VEHICULAR TRAFFIC. THE COST OF PLACING AND REMOVING THE WEDGE SHALL BE INCLUDED IN THE COST OF OTHER ITEMS. SEE "TYP. WEDGE SECTION" THIS SHEET.

15. THE POSTED SPEED DURING CONSTRUCTION OF THIS PROJECT WILL BE 25 MPH.

16. ALL FLAGGING OPERATIONS SHALL FOLLOW TTC-23 AND/OR TTC-24 OF THE 2011 VIRGINIA WORK AREA PROTECTION MANUAL. THE COST OF THE REQUIRED SHADOW VEHICLE SHALL BE INCLUDED IN THE PRICE FOR OTHER ITEMS IN THE CONTRACT AND NO ADDITIONAL COMPENSATION FOR THIS ITEM WILL BE MADE.

17. ALL CONSTRUCTION SIGNS SHALL BE THE RESPONSIBILITY OF THE CONTRACTOR, INCLUDING FURNISHING, INSTALLING, ADJUSTING, MAINTAINING, AND REMOVING SIGNS AND POSTS PER THE VDOT SPECIFICATIONS AND STANDARD DETAILS.

18. THE CONTRACTOR MAY WORK 24 HOURS/7 DAYS A WEEK FROM THE COMMENCEMENT OF THE PROJECT TO THE FINAL ACCEPTANCE BY THE CITY. ADDITIONAL COSTS INCURRED BY THE CONTRACTOR FOR THESE HOURS SHALL BE INCIDENTAL TO OTHERS PAY ITEMS.

19. THE CONTRACTOR SHALL PROVIDE TEMPORARY PAVEMENT MARKINGS AS REQUIRED FOR STAGING TRAFFIC.

20. PAINT, LIQUID ASPHALT OR TAPE WILL NOT BE ALLOWED FOR ERADICATING EXIST PAVEMENT MARKINGS

21. ALL SURFACE PAVEMENT SHALL BE PLACED IN A CONTINUOUS OPERATION AS A LAST STEP OF PAVEMENT CONSTRUCTION.

22. DURING SPEED REDUCTIONS ANY EXISTING CONFLICTING SPEED LIMIT SIGNS SHALL BE COVERED.

23. DURING CONSTRUCTION THE CONTRACTOR IS RESPONSIBLE FOR THE MAINTENANCE OF ALL TEMPORARY PAVEMENT WITHIN THE WORK AREA. THE COST OF THIS WORK IS TO INCLUDED IN THE COST OF OTHER ITEMS.

24. ALL EXISTING PAVEMENT MARKINGS AND MARKERS IN CONFLICT WITH CONSTRUCTION PAVEMENT MARKINGS AND MARKERS SHALL BE REMOVED OR COVERED WITH TYPE E BLACK TAPE DURING CONSTRUCTION. UPON COMPLETION OF CONSTRUCTION, REMOVED PAVEMENT MARKINGS AND MARKERS SHALL BE REPLACED, OR THE TYPE E BLACK TAPE REMOVED. THE COST OF REPLACEMENT OR REMOVAL OF TYPE E BLACK TAPE SHALL BE INCLUDED IN THE PRICE BID FOR OTHER ITEMS.

25. NO OPEN TRENCH SHALL BE LEFT OPEN AT THE END OF EACH WORKDAY UNLESS APPROVED BY THE CITY TRANSPORTATION ENGINEER.

26. PEDESTRIAN TRAFFIC SHALL BE MAINTAINED THROUGHOUT THE PROJECT AREA AT ALL TIMES AND DURING ALL CONSTRUCTION PHASES, AND SHALL CONFORM TO ACCESSIBILITY REQUIREMENTS. WHEN MAINTENANCE OF PEDESTRIAN TRAFFIC THRU THE WORK AREA IS NOT FEASIBLE, AN ALTERNATE ROUTE AROUND THE WORK AREA MUST BE PROVIDED. PEDESTRIAN ROUTES AND DETOURS SHALL BE DESIGNED IN ACCORDANCE WITH THE "VIRGINIA WORK AREA PROTECTION MANUAL" AND SUBMITTED TO THE CITY TRANSPORTATION ENGINEER FOR APPROVAL. THE COST OF ALL PEDESTRAIN ROUTE AND DETOUR ITEMS SHALL BE INCLUDED IN THE COST OF OTHER ITEMS.

27. CONSTRUCTION PAVEMENT MARKERS SHALL BE INSTALLED AT 20' SPACING IN TRANSITION (LANE DROP) OR LANE SHIFT AREAS. THE COST SHALL BE INCLUDED IN THE PRICE FOR OTHER BID ITEMS

28. MODIFICATION OF TRAFFIC CONTROL DEVICES REQUIRED WHEN MOVING FROM ONE STAGE OF CONSTRUCTION TO ANOTHER SHALL BE PERFORMED DURING NIGHTTIME HOURS.

29(A). THIS PROJECT IS DESIGNED AS A TYPE B PROJECT AS DEFINED BY VDOT INSTRUCTIONAL AND INFORMATIONAL MEMORANDUM LD-241.5.

29(B). WHERE ONE-WAY TRAFFIC SITUATIONS ARE CREATED DUE TO TRAFFIC MAINTENANCE, ONE WAY SIGNS SHALL BE PROVIDED AT ALL ACCESS POINTS. THE COST OF THIS WORK SHALL BE INCLUDED IN THE COST OF OTHER ITEMS.

30. THE MAINTENANCE OF TRAFFIC (M.O.T.) FOR THE TRANSPORTATION MANAGEMENT PLAN HAS BEEN DESIGNED FOR THIS PROJECT ONLY. IF THE MIDTOWN CONNECTOR PROJECT ADJACENT TO THIS PROJECT IS UNDER CONSTRUCTION WHEN THIS PROJECT IS BEING CONSTRUCTED THE CONTRACTOR SHALL COORDINATE M.O.T. AND CONSTRUCTION (CONSTRUCTION SIGNS, TRAFFIC FLOW, ROADWAY CONSTRUCTION ETC.) WITH THE CONTRACTOR OF THE MIDTOWN CONNECTOR PROJECT AND THE CITY OF LYNCHBURG. COST SHALL BE INCLUDED IN THE PAY ITEM FOR "WORK ZONE TRAFFIC CONTROL MANAGEMENT".

31. BIDDERS ARE ADVISED THAT THE NORTH BOUND LANE OF KEMPER ST. WILL BE CLOSED AT THE TIME OF AWARD AND WILL DELAY THE IMPLEMENTATION OF CONSTRUCTION ACTIVITIES OF THIS PROJECT INDEFINITELY. BIDDERS ARE ENCOURAGED TO EVALUATE THE PROPOSED MAINTENANCE OF TRAFFIC AND DETOUR PLANS FOR THE MIDTOWN CONNECTOR PROJECT. COORDINATION OF WORK ZONES IS A SALIENT FEATURE OF THIS CONTRACT.

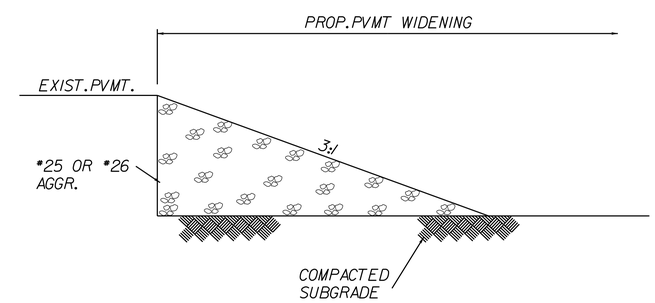

TYPICAL WEDGE
NO SCALE

CONTRACTOR SHALL PROVIDE STONE WEDGE AGAINST EXIST.PAVEMENT AFTER EXCAVATION FOR NEW PAVEMENT AND AT THE END OF EACH WORK DAY.

PROJECT MANAGER<STEVE_CAMPBELL_MATTERN & CRAIG (540)-345-9342>
SURVEYED BY <MATTERN & CRAIG (540)-345-9342>
DESIGN SUPERVISED BY <CITY OF LYNCHBURG>
DESIGN BY <RANDY DODSON_MATTERN & CRAIG>

TRANSPORTATION MANAGEMENT PLAN

COMMONWEALTH OF VIRGINIA
MICHAEL S. AGEE
Lic. No. 015232
PROFESSIONAL ENGINEER

MATTERN & CRAIG, INC
Roanoke, Virginia
(ROADWAY ENGINEER)

REVISED	STATE	STATE ROUTE	STATE PROJECT	SHEET NO.
	VA.	29	U000-118-204,C-501	IG(2)

DESIGN FEATURES RELATING TO CONSTRUCTION OR TO REGULATION AND CONTROL OF TRAFFIC MAY BE SUBJECT TO CHANGE AS DEEMED NECESSARY BY THE DEPARTMENT

TEMPORARY TRAFFIC CONTROL PLAN

See General Notes Sheet and detailed Plan Sheets through .

PUBLIC COMMUNICATIONS PLAN

Contracts:
Non-emergency traffic impacts and changing traffic patterns should be provided to the city transportation engineer at least 72 hours in advance of the change.

Target Audience	Contact Method	Phone No., E-mail or Address	Responsible Charge
Motorists	News Releases, Weekly Traffic Information	See Public Affairs news release distribution news	City Transportation Engineer
Police, EMS, Hospitals Fire and Rescue	Phone	Emergency Services Director	City Transportation Engineer
City of Lynchburg Officials	Phone		City Transportation Engineer
Businesses	Phone		City Transportation Engineer
Utilities	Phone		

TRANSPORTATION OPERATIONS PLAN

1) The following is a list local emergency contact agencies:
 a) Virginia State Police - 1-800-552-2118
 b) City of Lynchburg Police Department
 c) 911 Center - 911
 d) Haz-Mat Center (if spill involved) -911

2) Procedures to respond to traffic incidents that may occur in the work Zone:
 a) Contractor to notify City Inspector in Charge.
 b) Depending upon severity of incident, contractor may have to shut down work.
 c) Upon arrival on scene, The City Transportation Engineer to determine response necessary to allow traveling public around incident.
 d) Inspector is to notify The City Transportation Engineer and take pictures as necessary, especially pictures of contractor's work zone to verify the proper setup.

3) City Transportation Enginneer will take control of the incident and direct its clearing and restoration to normal traffic conditions.

4) The incident will be reviewed by the City Transportation Engineer to determine if any modification of the Temporary Traffic Control Plan is necessary. If it is determined that it is necessary to alter the plan, then a meeting will be called with Contractor, to discuss modification and implementation of an improved traffic control plan.

TRANSPORTATION MANAGEMENT PLAN TYPE B

MAINTENANCE OF TRAFFIC &
SEQUENCE OF CONSTRUCTION NARRATIVE

PHASE 1 KEMPER STREET:
PROVIDE M.O.T. ACCORDING TO FIG. TTC-17.0, "INSIDE LANE CLOSURE OPERATION ON A FOUR LANE ROADWAY" OF THE 2011 VIRGINIA WORK AREA PROTECTION MANUAL. BOTH INSIDE LANES (INSIDE E.B.L. & INSIDE W.B.L.) OF KEMPER STREET AREA TO BE CLOSED FOR REMOVAL OF EXISTING RAISED CONCRETE MEDIAN. MEDIAN AREA TO BE TEMPORARILY PAVED FOR TEMPORARY TRAFFIC USE.

PHASE 2, STAGE 1 KEMPER STREET:
PROVIDE M.O.T. ACCORDING TO FIG. TTC 20.0 "LANE CLOSURE OPERATION WITH CONCRETE TRAFFIC BARRIER" OF THE 2011 VIRGINIA WORK AREA PROTECTION MANUAL. BOTH W.B.L. OF KEMPER STREET ARE TO BE CLOSED AND TWO-WAY TRAFFIC ESTABLISHED ON THE EXISTING 2 E.B.L.'S OF KEMPER STREET. CONTRACTOR TO REMOVE AND CONSTRUCT PORTION OF BRIDGE AS NOTED ON BRIDGE PLANS. CONTRACTOR TO CONSTRUCT RAMPS B1, B2, C1 AND C2. AFTER COMPLETION OF THIS HALF OF BRIDGE AND BEFORE PAVING OF NEW ROADWAY APPROACH TO BRIDGE. RELOCATED WATERLINE SHALL BE CONSTRUCTED AND NEW WATERLINE TIE-IN TO EXISTING WATERLINE TO BE MADE IN STAGE 2 OF PHASE 2.

PHASE 2, STAGE 2 KEMPER STREET:
SHIFT M.O.T. ON KEMPER STREET TO PROVIDE TWO-WAY TRAFFIC ON 2 NEWLY CONSTRUCTED W.B.L.'S AND CLOSE 2 EXISTING E.B.L.'S OF KEMPER STREET ACCORDING TO FIG. TTC-20.0, "LANE CLOSURE OPERATION WITH CONCRETE TRAFFIC BARRIER", OF THE 2011 VIRGINIA WORK AREA PROTECTION MANUAL. CONTRACTOR TO PROVIDE AND INSTALL TEMPORARY SIGNALS AS SHOWN ON THE M.O.T. PLANS. CONTRACTOR TO REMOVE AND CONSTRUCT REMAINDER OF BRIDGE AS NOTED ON BRIDGE PLANS. CONTRACTOR TO CONSTRUCT RAMP D-1 AND D-2. INSTALL SIGNALS AND REMOVE RAMP AND LOOP IN N.W. CORNER OF INTERCHANGE.

PHASE 3, STAGE 1 ROUTE 29:
PROVIDE M.O.T. ON N.B.L. OF ROUTE 29 ACCORDING TO FIG. TTC-16.0, "OUTSIDE LANE CLOSURE OPERATION ON A FOUR-LANE ROADWAY" AND FIG. TTC-37, "WORK OPERATION IN THE VICINITY OF AN EXIT RAMP" OF THE 2011 VIRGINIA WORK AREA PROTECTION MANUAL. CONTRACTOR TO DEMOLISH AND CONSTRUCT TAPER AND ACCELERATION/DECELERATION LANES AS REQD.

PHASE 3, STAGE 2 ROUTE 29:
PROVIDE M.O.T. ON N.B.L. OF ROUTE 29 ACCORDING TO FIG. TTC-16.0, "OUTSIDE LANE CLOSURE OPERATION ON A FOUR-LANE ROADWAY" AND FIG. TTC-39, "WORK OPERATION IN THE VICINITY OF AN ENTRANCE RAMP" OF THE 2011 VIRGINIA WORK AREA PROTECTION MANUAL. CONTRACTOR TO DEMOLISH AND CONSTRUCT TAPER AND ACCELERATION/DECELERATION LANES AS REQD.

GENERAL NOTES

THIS PROJECT IS A VDOT TYPE B PROJECT.

THE ROUTE 29 WORK ZONE LOCATION IS APPROXIMATELY 1400' NORTH OF THE KEMPER STREET BRIDGE CROSSING ROUTE 29 AND APPROXIMATELY 700' SOUTH OF THE KEMPER STREET BRIDGE CROSSING ROUTE 29.

THE KEMPER STREET WORK ZONE LOCATION IS APPROXIMATELY 500' WEST OF THE ROUTE 29 CROSSING OF KEMPER STREET AND APPROXIMATELY 600' EAST OF THE ROUTE 29 CROSSING OF KEMPER STREET.

THE LENGTH AND WIDTH OF THE KEMPER STREET WORK ZONE IS APPROXIMATELY 1100' LONG AND 60' WIDE.

THE LENGTH AND WIDTH OF THE ROUTE 29 WORK ZONE IS APPROXIMATELY 1700' LONG AND 100' WIDE.

THE RAMPS AND LOOPS OF THE INTERCHANGE ARE ALSO INCLUDED IN THE WORK ZONES FOR KEMPER STREET AND ROUTE 29.

ALL LANES OF KEMPER STREET IN THE WORK ZONE ARE AFFECTED BY THE PROJECT WORK INCLUDING RECONSTRUCTION OF THE BRIDGE ON KEMPER STREET OVER ROUTE 29.

THE ACCELERATION AND DECELERATION LANES AND TAPER LANES OF ROUTE 29 RAMPS AND LOOPS ARE AFFECTED BY THE PROJECT WORK.

THERE IS NO RESTRICTION ON THE HOURS THE WORK ZONE WILL BE ACTIVE.

THE MAJOR TYPE OF TRAVELERS THROUGH THE PROJECT AREA ARE TRUCKERS, COMMUTERS AND COMMERCIAL VEHICLES.

THE TYPICAL TRAFFIC CONTROL STANDARDS (T.T.C. FIGURES) OF THE 2011 VIRGINIA WORK AREA PROTECTION MANUAL ARE NOTED ON THE TRANSPORTATION MANAGEMENT PLANS.

POTENTIAL LOCATIONS WITHIN THE R/W FOR CONSTRUCTION EQUIPMENT AND MATERIAL STORAGE IS THE INTERIOR AREA OF THE INTERCHANGE LOOPS OF THE PROJECT.

THERE ARE NO ENTRANCES OR PEDESTRIAN ACCESS POINTS IN THE WORK ZONE AFFECTED BY THIS PROJECT. CHANNELIZING DEVICES WILL AFFECT 16TH STREET AND HOLIDAY STREET. ALL THE LOOP AND RAMP ENTRANCES AND EXITS WILL BE AFFECTED BY THE WORK ZONE CONSTRUCTION.

PROJECT MANAGER <STEVE_CAMPBELL_MATTERN & CRAIG (540)-345-9342>
SURVEYED BY <MATTERN & CRAIG (540)-345-9342>
DESIGN SUPERVISED BY <CITY OF LYNCHBURG>
DESIGN BY <RANDY DODSON_MATTERN & CRAIG>

TRANSPORTATION MANAGEMENT PLAN
PHASE I KEMPER STREET
MAINTENANCE OF TRAFFIC & SEQUENCE OF CONSTRUCTION

COMMONWEALTH OF VIRGINIA
MICHAEL S. AGEE
Lic. No. 015232
PROFESSIONAL ENGINEER

MATTERN & CRAIG, INC
Roanoke, Virginia
(ROADWAY ENGINEER)

REVISED	STATE	STATE ROUTE	STATE PROJECT	SHEET NO.
	VA.	29	U000-118-204, C-501	1G(3)

DESIGN FEATURES RELATING TO CONSTRUCTION OR TO REGULATION AND CONTROL OF TRAFFIC MAY BE SUBJECT TO CHANGE AS DEEMED NECESSARY BY THE DEPARTMENT

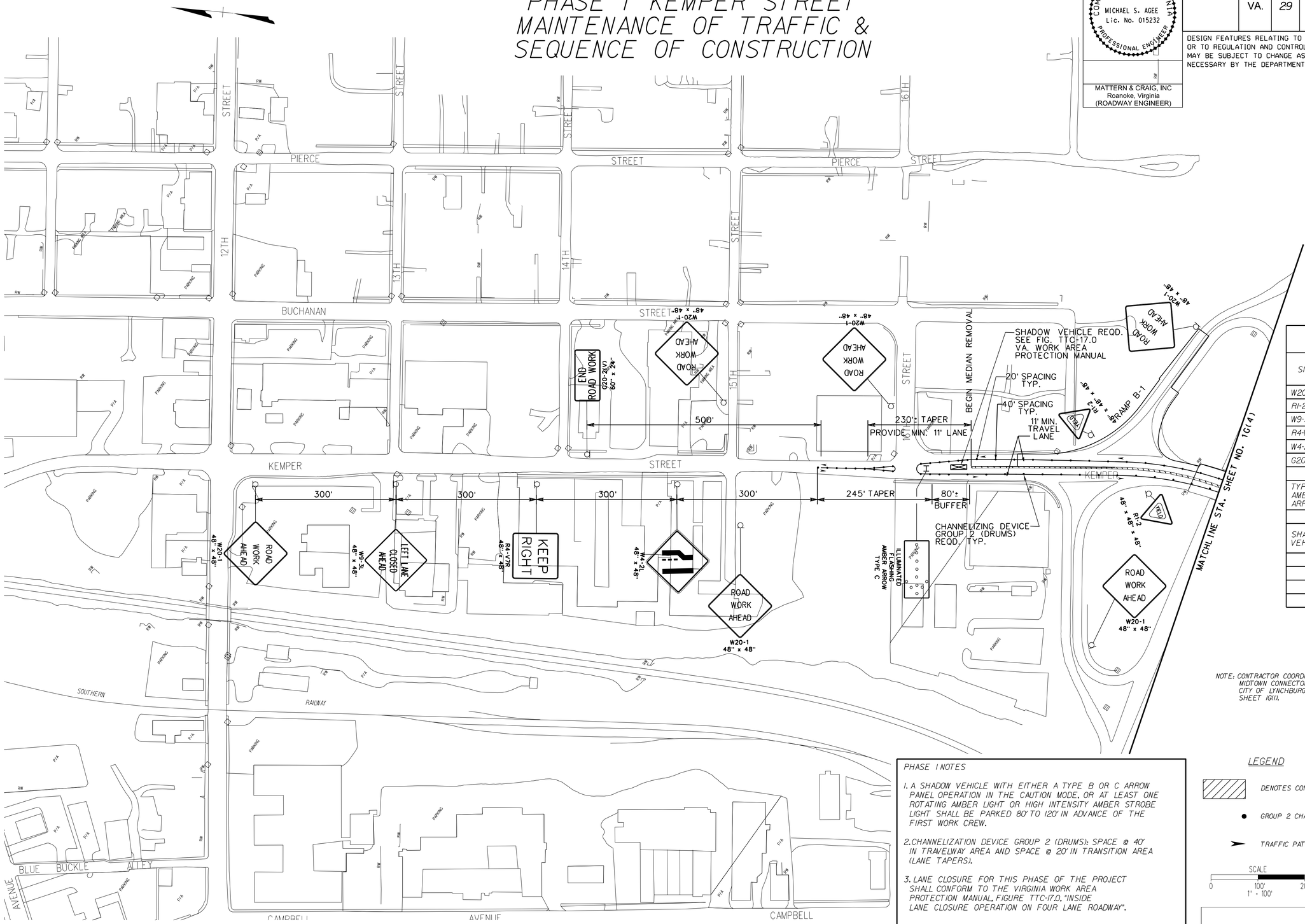

PHASE I CONSTRUCTION SIGNS		
SIGN	NO. OF SIGNS REQD.	SIZE
W20-1	10	48" X 48"
R1-2	4	48" X 48" X 48"
W9-3L	2	48" X 48"
R4-V7R	2	48" X 48"
W4-2L	2	48" X 48"
G20-2(V)	2	60" X 24"
TYPE C AMBER ARROW	2	———
SHADOW VEHICLE	2	———

NOTE: CONTRACTOR COORDINATE M.O.T. WITH MIDTOWN CONNECTOR PROJECT AND CITY OF LYNCHBURG. SEE NOTE 30, SHEET 1G(1).

PHASE I NOTES

1. A SHADOW VEHICLE WITH EITHER A TYPE B OR C ARROW PANEL OPERATION IN THE CAUTION MODE, OR AT LEAST ONE ROTATING AMBER LIGHT OR HIGH INTENSITY AMBER STROBE LIGHT SHALL BE PARKED 80' TO 120' IN ADVANCE OF THE FIRST WORK CREW.
2. CHANNELIZATION DEVICE GROUP 2 (DRUMS): SPACE @ 40' IN TRAVELWAY AREA AND SPACE @ 20' IN TRANSITION AREA (LANE TAPERS).
3. LANE CLOSURE FOR THIS PHASE OF THE PROJECT SHALL CONFORM TO THE VIRGINIA WORK AREA PROTECTION MANUAL, FIGURE TTC-17.0, "INSIDE LANE CLOSURE OPERATION ON FOUR LANE ROADWAY".

LEGEND

DENOTES CONSTRUCTION AREA

GROUP 2 CHANNELIZATION DEVICE

TRAFFIC PATTERN

SCALE
0 100' 200'
1" = 100'

PROJECT	SHEET NO.
U000-118-204	1G(3)

PROJECT MANAGER<STEVE_CAMPBELL_MATTERN & CRAIG (540)-345-9342>
SURVEYED BY <MATTERN & CRAIG (540)-345-9342>
DESIGN SUPERVISED BY <CITY OF LYNCHBURG>
DESIGN BY <RANDY DODSON_MATTERN & CRAIG>

TRANSPORTATION MANAGEMENT PLAN
PHASE I KEMPER STREET
MAINTENANCE OF TRAFFIC & SEQUENCE OF CONSTRUCTION

COMMONWEALTH OF VIRGINIA
MICHAEL S. AGEE
Lic. No. 015232
PROFESSIONAL ENGINEER

MATTERN & CRAIG, INC
Roanoke, Virginia
(ROADWAY ENGINEER)

REVISED	STATE	STATE ROUTE	STATE PROJECT	SHEET NO.
	VA.	29	U000-118-204, C-501	1G(4)

DESIGN FEATURES RELATING TO CONSTRUCTION OR TO REGULATION AND CONTROL OF TRAFFIC MAY BE SUBJECT TO CHANGE AS DEEMED NECESSARY BY THE DEPARTMENT

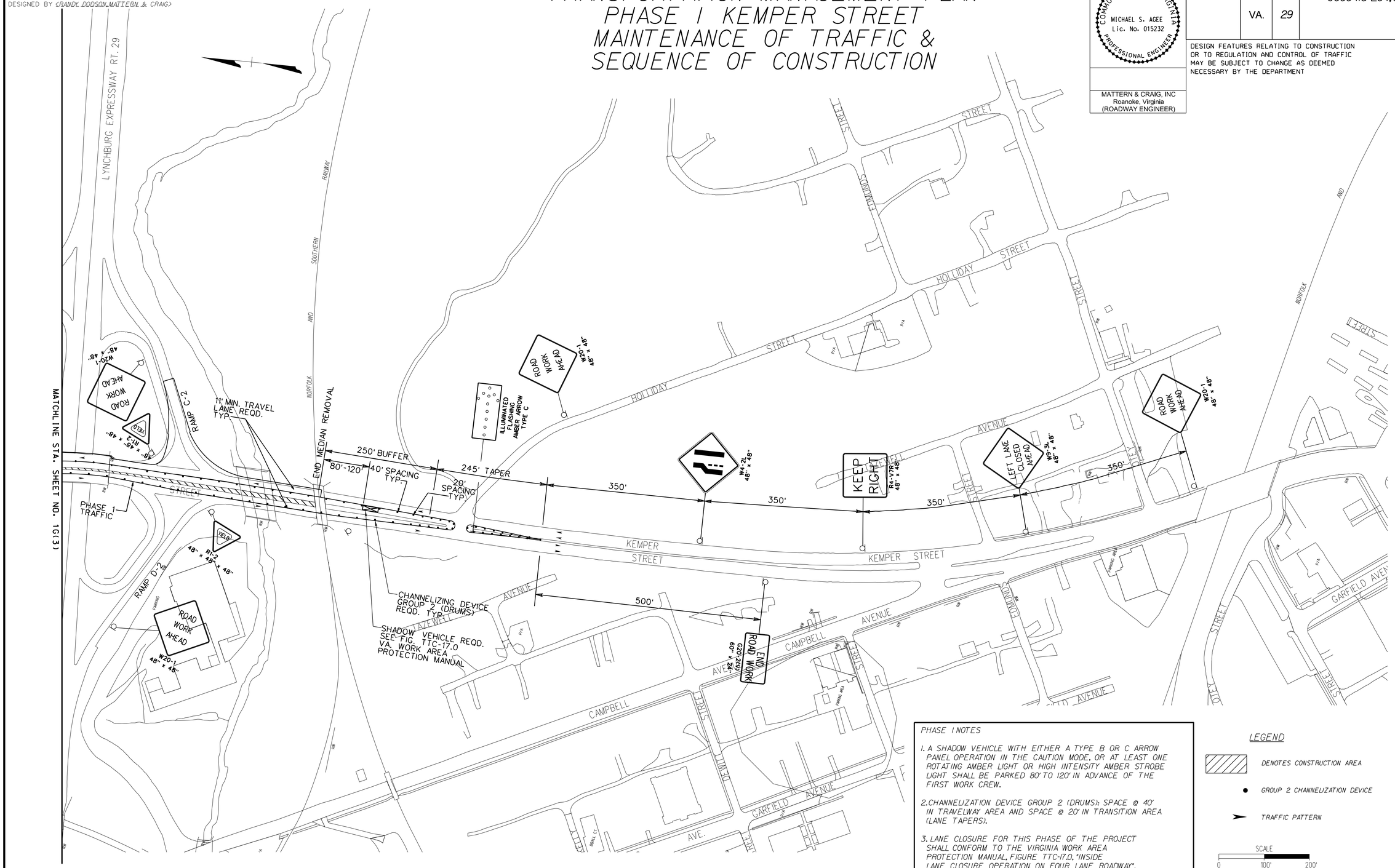

PHASE I NOTES

1. A SHADOW VEHICLE WITH EITHER A TYPE B OR C ARROW PANEL OPERATION IN THE CAUTION MODE, OR AT LEAST ONE ROTATING AMBER LIGHT OR HIGH INTENSITY AMBER STROBE LIGHT SHALL BE PARKED 80' TO 120' IN ADVANCE OF THE FIRST WORK CREW.

2. CHANNELIZATION DEVICE GROUP 2 (DRUMS): SPACE @ 40' IN TRAVELWAY AREA AND SPACE @ 20' IN TRANSITION AREA (LANE TAPERS).

3. LANE CLOSURE FOR THIS PHASE OF THE PROJECT SHALL CONFORM TO THE VIRGINIA WORK AREA PROTECTION MANUAL, FIGURE TTC-17.0, "INSIDE LANE CLOSURE OPERATION ON FOUR LANE ROADWAY".

LEGEND

- DENOTES CONSTRUCTION AREA
- GROUP 2 CHANNELIZATION DEVICE
- TRAFFIC PATTERN

SCALE
0 100' 200'
1" = 100'

PROJECT	SHEET NO.
U000-118-204	1G(4)

PROJECT MANAGER<STEVE_CAMPBELL_MATTERN & CRAIG (540)-345-9342>
SURVEYED BY <MATTERN & CRAIG (540)-345-9342>
DESIGN SUPERVISED BY <CITY OF LYNCHBURG>
DESIGN BY <RANDY DODSON_MATTERN & CRAIG>

TRANSPORTATION MANAGEMENT PLAN
PHASE 2 STAGE 1 KEMPER STREET
MAINTENANCE OF TRAFFIC & SEQUENCE OF CONSTRUCTION

COMMONWEALTH OF VIRGINIA
MICHAEL S. AGEE
Lic. No. 015232
PROFESSIONAL ENGINEER

MATTERN & CRAIG, INC
Roanoke, Virginia
(ROADWAY ENGINEER)

REVISED	STATE	STATE ROUTE	STATE PROJECT	SHEET NO.
	VA.	29	U000-118-204,C-501	1G(5)

DESIGN FEATURES RELATING TO CONSTRUCTION OR TO REGULATION AND CONTROL OF TRAFFIC MAY BE SUBJECT TO CHANGE AS DEEMED NECESSARY BY THE DEPARTMENT

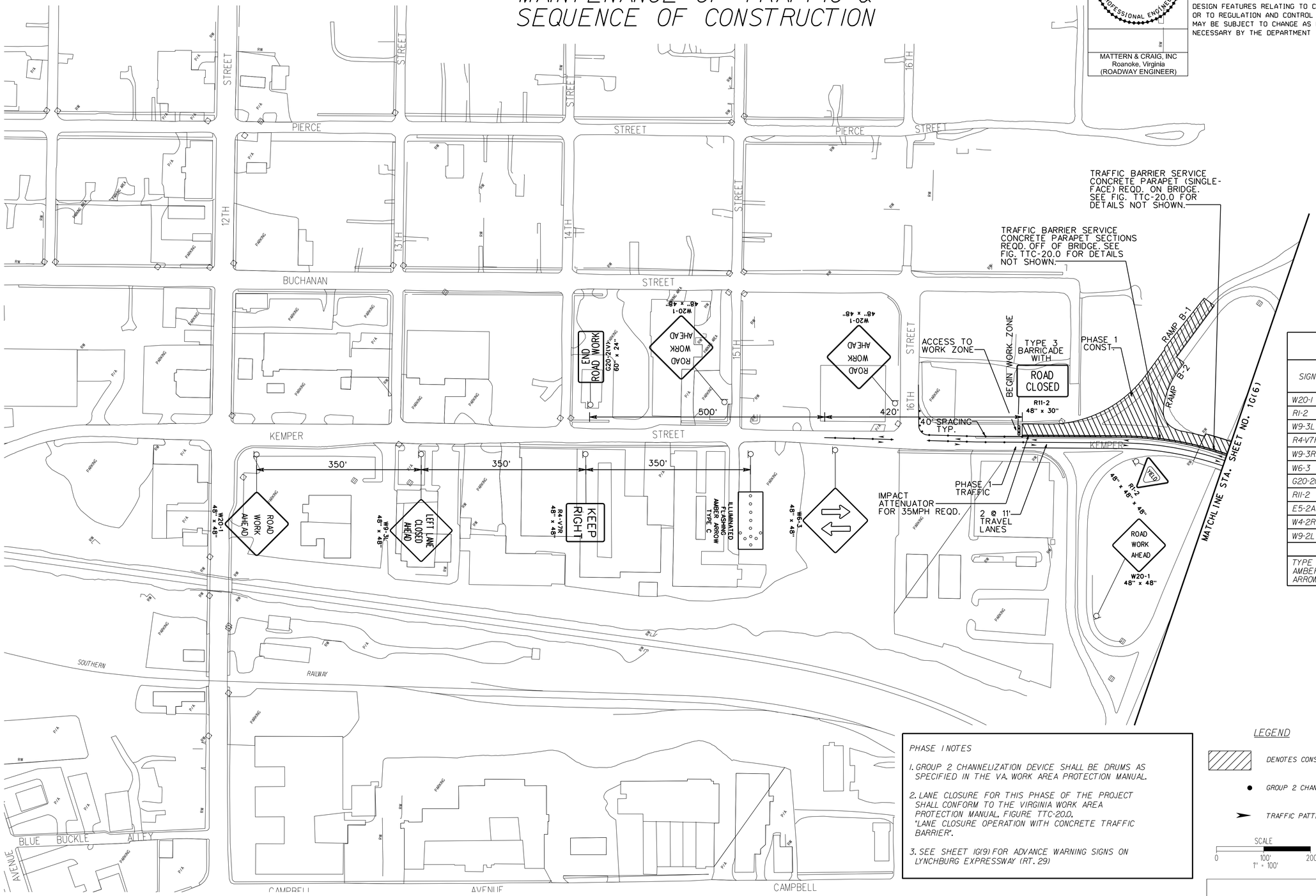

PHASE 1 STAGE 1 CONSTRUCTION SIGNS		
SIGN	NO. OF SIGNS REQD.	SIZE
W20-1	6	48" X 48"
R1-2	1	48" X 48" X 48"
W9-3L	1	48" X 48"
R4-V7R	1	48" X 48"
W9-3R	1	48" X 48"
W6-3	2	48" X 48"
G20-2(V)	2	60" X 24"
R11-2	3	48" X 30"
E5-2A	2	48" X 36"
W4-2R	1	48" X 48"
W9-2L	1	48" X 48"
TYPE C AMBER ARROW	2	———

PHASE 1 NOTES

1. GROUP 2 CHANNELIZATION DEVICE SHALL BE DRUMS AS SPECIFIED IN THE VA. WORK AREA PROTECTION MANUAL.
2. LANE CLOSURE FOR THIS PHASE OF THE PROJECT SHALL CONFORM TO THE VIRGINIA WORK AREA PROTECTION MANUAL, FIGURE TTC-20.0, "LANE CLOSURE OPERATION WITH CONCRETE TRAFFIC BARRIER".
3. SEE SHEET 1G(9) FOR ADVANCE WARNING SIGNS ON LYNCHBURG EXPRESSWAY (RT. 29)

LEGEND

DENOTES CONSTRUCTION AREA

GROUP 2 CHANNELIZATION DEVICE

TRAFFIC PATTERN

SCALE
0 100' 200'
1" = 100'

PROJECT	SHEET NO.
U000-118-204	1G(5)

PROJECT MANAGER<STEVE_CAMPBELL_MATTERN & CRAIG (540)-345-9342>
SURVEYED BY <MATTERN & CRAIG (540)-345-9342>
DESIGN SUPERVISED BY <CITY OF LYNCHBURG>
DESIGN BY <RANDY DODSON_MATTERN & CRAIG>

TRANSPORTATION MANAGEMENT PLAN
PHASE 2 STAGE I KEMPER STREET
MAINTENANCE OF TRAFFIC & SEQUENCE OF CONSTRUCTION

COMMONWEALTH OF VIRGINIA
MICHAEL S. AGEE
Lic. No. 015232
PROFESSIONAL ENGINEER

MATTERN & CRAIG, INC
Roanoke, Virginia
(ROADWAY ENGINEER)

REVISED	STATE	STATE ROUTE	STATE PROJECT	SHEET NO.
	VA.	29	U000-118-204,C-501	IG(6)

DESIGN FEATURES RELATING TO CONSTRUCTION OR TO REGULATION AND CONTROL OF TRAFFIC MAY BE SUBJECT TO CHANGE AS DEEMED NECESSARY BY THE DEPARTMENT

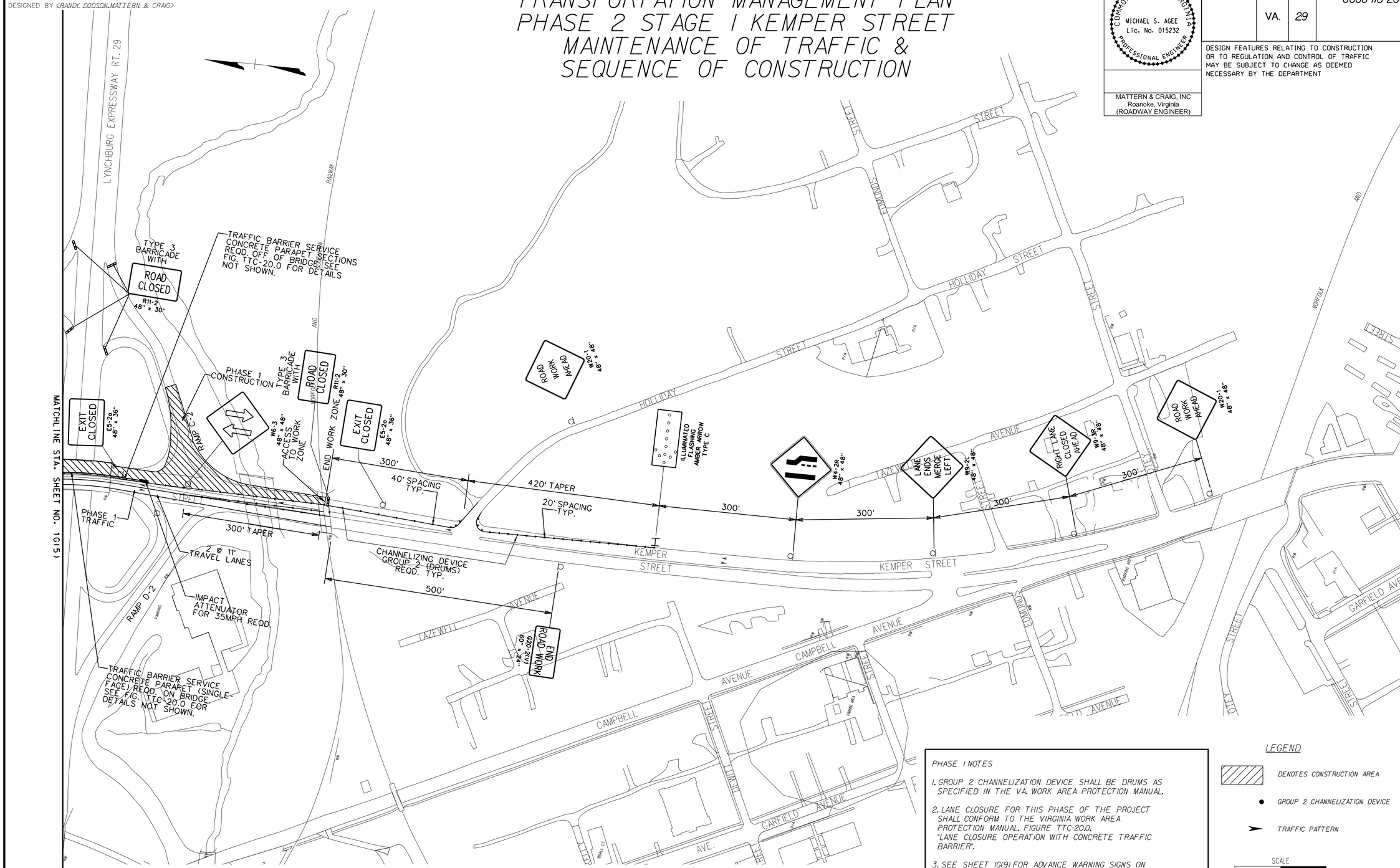

PHASE I NOTES

1. GROUP 2 CHANNELIZATION DEVICE SHALL BE DRUMS AS SPECIFIED IN THE VA. WORK AREA PROTECTION MANUAL.
2. LANE CLOSURE FOR THIS PHASE OF THE PROJECT SHALL CONFORM TO THE VIRGINIA WORK AREA PROTECTION MANUAL, FIGURE TTC-20.0. "LANE CLOSURE OPERATION WITH CONCRETE TRAFFIC BARRIER".
3. SEE SHEET IG(9) FOR ADVANCE WARNING SIGNS ON LYNCHBURG EXPRESSWAY (RT. 29)

LEGEND

- DENOTES CONSTRUCTION AREA
- GROUP 2 CHANNELIZATION DEVICE
- TRAFFIC PATTERN

SCALE
0 100' 200'
1" = 100'

PROJECT	SHEET NO.
U000-118-204	IG(6)

PROJECT MANAGER <STEVE_CAMPBELL_MATTERN & CRAIG (540)-345-9342>
SURVEYED BY <MATTERN & CRAIG (540)-345-9342>
DESIGN SUPERVISED BY <CITY OF LYNCHBURG>
DESIGN BY <RANDY DODSON_MATTERN & CRAIG>

TRANSPORTATION MANAGEMENT PLAN
PHASE 2, STAGE 2
MAINTENANCE OF TRAFFIC & SEQUENCE OF CONSTRUCTION

COMMONWEALTH OF VIRGINIA
MICHAEL S. AGEE
Lic. No. 015232
PROFESSIONAL ENGINEER

MATTERN & CRAIG, INC
Roanoke, Virginia
(ROADWAY ENGINEER)

REVISED	STATE	STATE ROUTE	STATE PROJECT	SHEET NO.
	VA.	29	U000-118-204, C-501	IG(7)

DESIGN FEATURES RELATING TO CONSTRUCTION OR TO REGULATION AND CONTROL OF TRAFFIC MAY BE SUBJECT TO CHANGE AS DEEMED NECESSARY BY THE DEPARTMENT

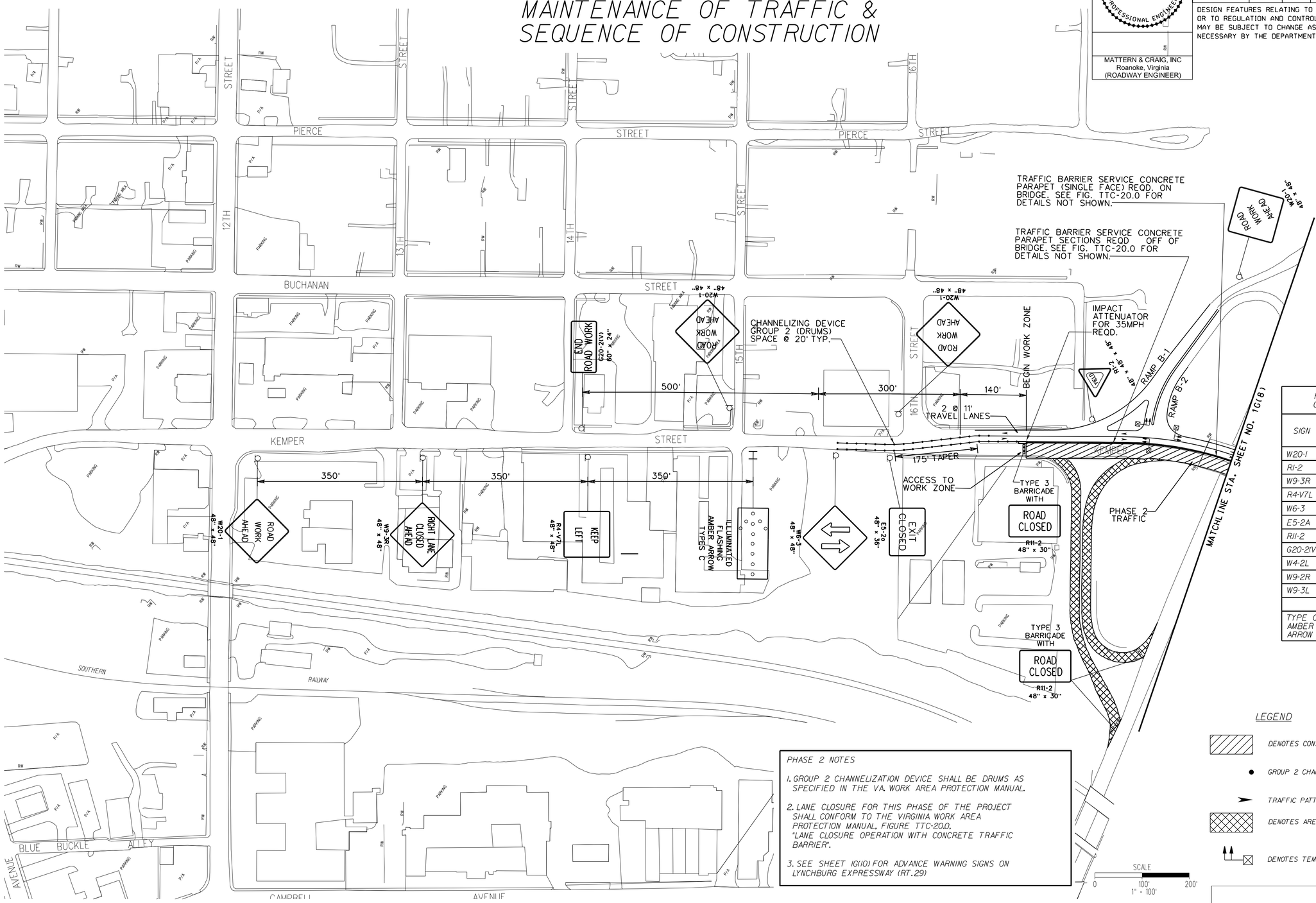

PHASE 2 STAGE 2 CONSTRUCTION SIGNS		
SIGN	NO. OF SIGNS REQD.	SIZE
W20-1	6	48" X 48"
R1-2	1	48" X 48" X 48"
W9-3R	1	48" X 48"
R4-V7L	1	48" X 48"
W6-3	2	48" X 48"
E5-2A	1	48" X 36"
R11-2	4	48" X 30"
G20-2(V)	2	60" X 24"
W4-2L	1	48" X 48"
W9-2R	1	48" X 48"
W9-3L	1	48" X 48"
TYPE C AMBER ARROW	2	———

LEGEND

- DENOTES CONSTRUCTION AREA
- GROUP 2 CHANNELIZATION DEVICE
- TRAFFIC PATTERN
- DENOTES AREA TO BE DEMOLISHED
- DENOTES TEMPORARY PORTABLE TRAFFIC SIGNALS

PHASE 2 NOTES

1. GROUP 2 CHANNELIZATION DEVICE SHALL BE DRUMS AS SPECIFIED IN THE VA. WORK AREA PROTECTION MANUAL.
2. LANE CLOSURE FOR THIS PHASE OF THE PROJECT SHALL CONFORM TO THE VIRGINIA WORK AREA PROTECTION MANUAL, FIGURE TTC-20.0, "LANE CLOSURE OPERATION WITH CONCRETE TRAFFIC BARRIER".
3. SEE SHEET IG(10) FOR ADVANCE WARNING SIGNS ON LYNCHBURG EXPRESSWAY (RT.29)

PROJECT	SHEET NO.
U000-118-204	IG(7)

PROJECT MANAGER<STEVE_CAMPBELL_MATTERN & CRAIG (540)-345-9342>
SURVEYED BY <MATTERN & CRAIG (540)-345-9342>
DESIGN SUPERVISED BY <CITY OF LYNCHBURG>
DESIGN BY <RANDY DODSON_MATTERN & CRAIG>

TRANSPORTATION MANAGEMENT PLAN
PHASE 2, STAGE 2
MAINTENANCE OF TRAFFIC & SEQUENCE OF CONSTRUCTION

COMMONWEALTH OF VIRGINIA
MICHAEL S. AGEE
Lic. No. 015232
PROFESSIONAL ENGINEER

MATTERN & CRAIG, INC
Roanoke, Virginia
(ROADWAY ENGINEER)

REVISED	STATE	STATE ROUTE	STATE PROJECT	SHEET NO.
	VA.	29	U000-118-204,C-501	1G(8)

DESIGN FEATURES RELATING TO CONSTRUCTION OR TO REGULATION AND CONTROL OF TRAFFIC MAY BE SUBJECT TO CHANGE AS DEEMED NECESSARY BY THE DEPARTMENT

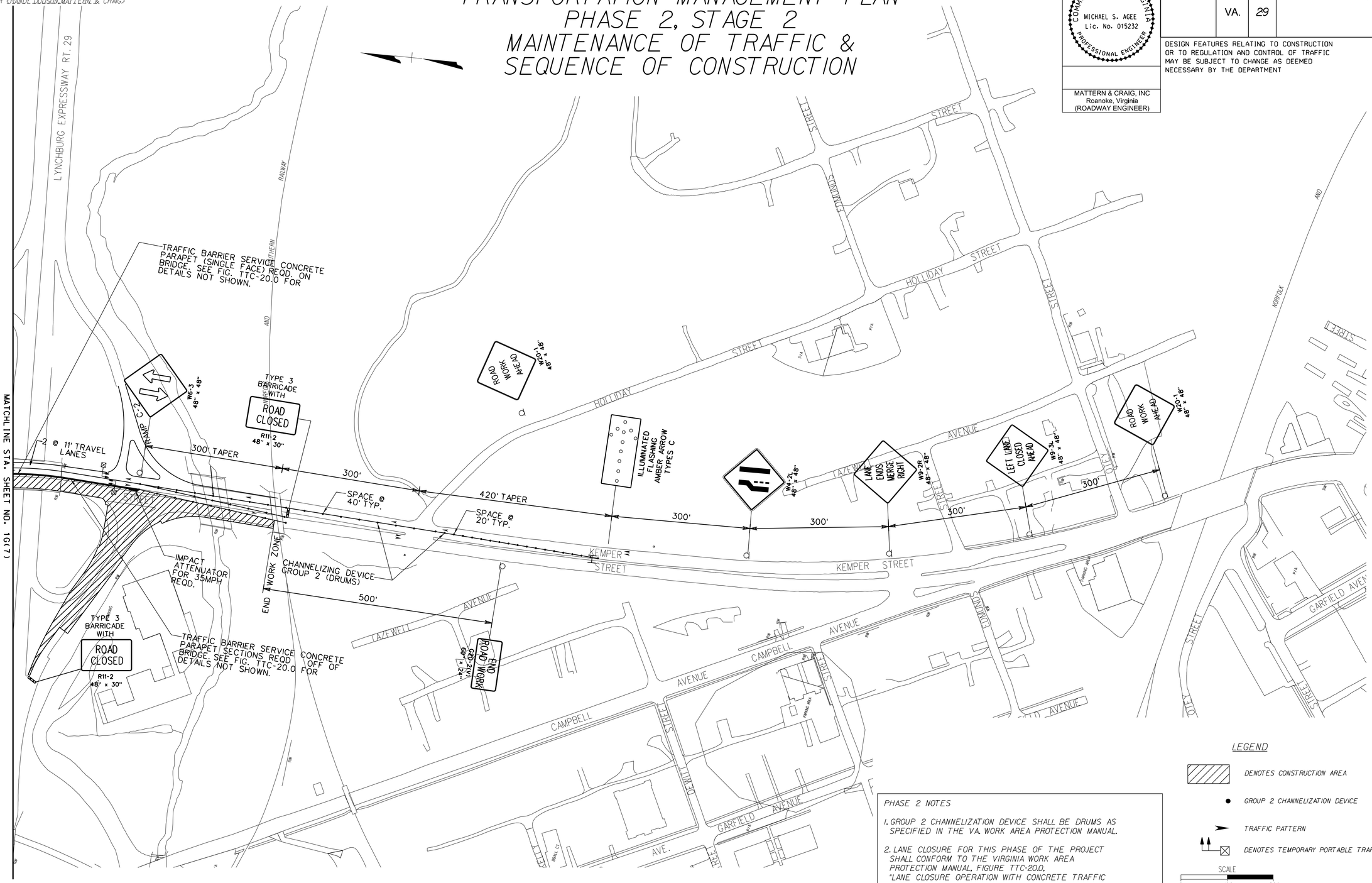

PHASE 2 NOTES

1. GROUP 2 CHANNELIZATION DEVICE SHALL BE DRUMS AS SPECIFIED IN THE VA. WORK AREA PROTECTION MANUAL.
2. LANE CLOSURE FOR THIS PHASE OF THE PROJECT SHALL CONFORM TO THE VIRGINIA WORK AREA PROTECTION MANUAL, FIGURE TTC-20.0, "LANE CLOSURE OPERATION WITH CONCRETE TRAFFIC BARRIER".
3. SEE SHEET 1G(10) FOR ADVANCE WARNING SIGNS ON LYNCHBURG EXPRESSWAY (RT.29)

LEGEND

- DENOTES CONSTRUCTION AREA
- GROUP 2 CHANNELIZATION DEVICE
- TRAFFIC PATTERN
- DENOTES TEMPORARY PORTABLE TRAFFIC SIGNALS

SCALE
0 100' 200'
1" = 100'

PROJECT	SHEET NO.
U000-118-204	1G(8)

PROJECT MANAGER STEVE_CAMPBELL, MATTERN & CRAIG (540)-345-9342
SURVEYED BY MATTERN_& _CRAIG_(540)-345-9342
DESIGN SUPERVISED BY CITY_OF_LYNCHBURG
DESIGN BY BANDY_DODSON, MATTERN_&_CRAIG

TRANSPORTATION MANAGEMENT PLAN
PHASE 3 STAGE 1
MAINTENANCE OF TRAFFIC & SEQUENCE OF CONSTRUCTION
(FOR N.B.L. LOOP / RAMP CLOSURES / CONST.)

REVISED	STATE	ROUTE	PROJECT	SHEET NO.
	VA.	29	U000-118-204, C-501	IG(9)

DESIGN FEATURES RELATING TO CONSTRUCTION OR TO REGULATION AND CONTROL OF TRAFFIC MAY BE SUBJECT TO CHANGE AS DEEMED NECESSARY BY THE DEPARTMENT

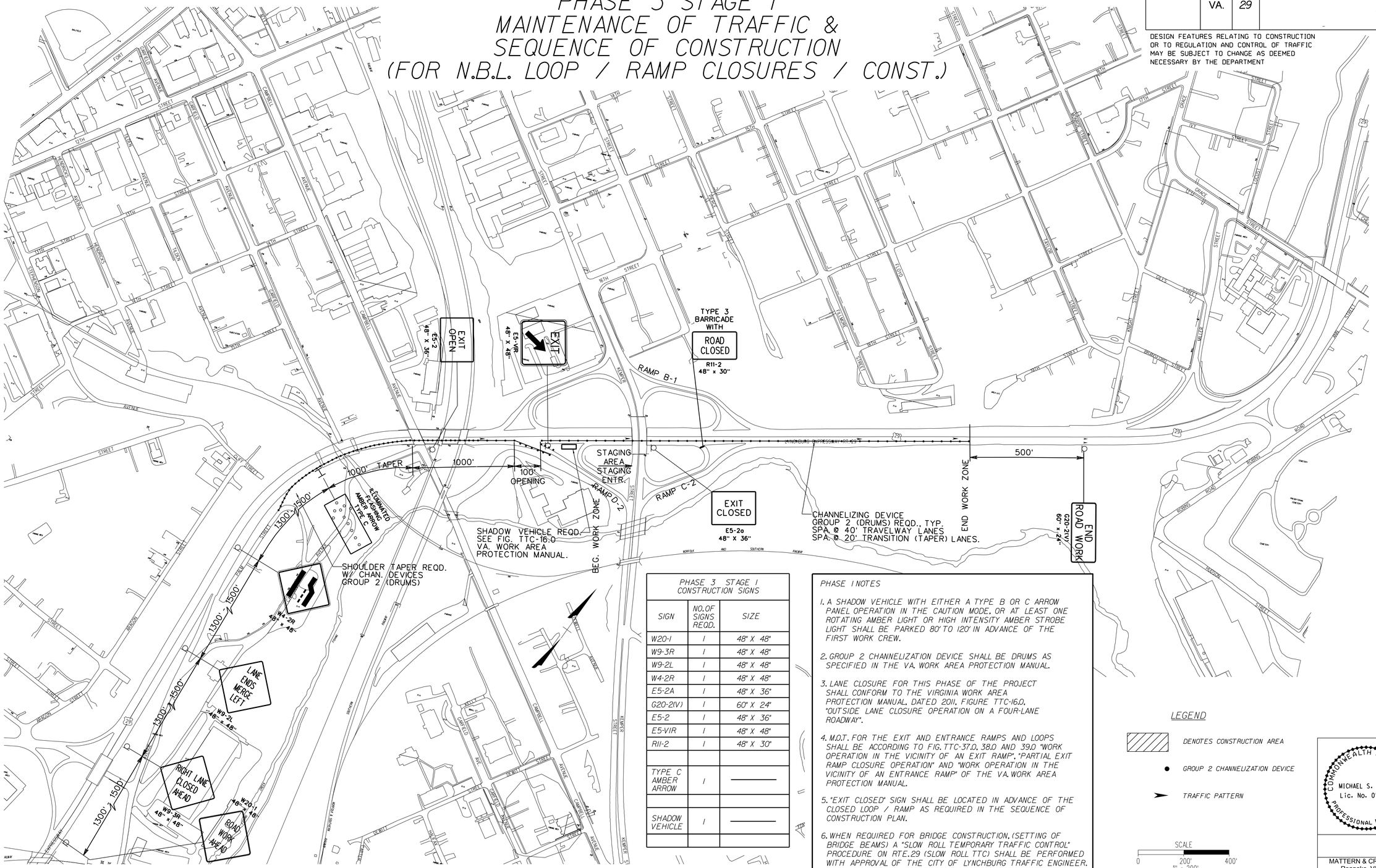

PHASE 3 STAGE 1 CONSTRUCTION SIGNS		
SIGN	NO. OF SIGNS REQD.	SIZE
W20-1	1	48" X 48"
W9-3R	1	48" X 48"
W9-2L	1	48" X 48"
W4-2R	1	48" X 48"
E5-2A	1	48" X 36"
G20-2(V)	1	60" X 24"
E5-2	1	48" X 36"
E5-VIR	1	48" X 48"
R11-2	1	48" X 30"
TYPE C AMBER ARROW	1	———
SHADOW VEHICLE	1	———

PHASE 1 NOTES

1. A SHADOW VEHICLE WITH EITHER A TYPE B OR C ARROW PANEL OPERATION IN THE CAUTION MODE, OR AT LEAST ONE ROTATING AMBER LIGHT OR HIGH INTENSITY AMBER STROBE LIGHT SHALL BE PARKED 80' TO 120' IN ADVANCE OF THE FIRST WORK CREW.

2. GROUP 2 CHANNELIZATION DEVICE SHALL BE DRUMS AS SPECIFIED IN THE V.A. WORK AREA PROTECTION MANUAL.

3. LANE CLOSURE FOR THIS PHASE OF THE PROJECT SHALL CONFORM TO THE VIRGINIA WORK AREA PROTECTION MANUAL, DATED 2011, FIGURE TTC-16.0, "OUTSIDE LANE CLOSURE OPERATION ON A FOUR-LANE ROADWAY".

4. M.O.T. FOR THE EXIT AND ENTRANCE RAMPS AND LOOPS SHALL BE ACCORDING TO FIG. TTC-37.0, 38.0 AND 39.0 "WORK OPERATION IN THE VICINITY OF AN EXIT RAMP", "PARTIAL EXIT RAMP CLOSURE OPERATION" AND "WORK OPERATION IN THE VICINITY OF AN ENTRANCE RAMP" OF THE V.A. WORK AREA PROTECTION MANUAL.

5. "EXIT CLOSED" SIGN SHALL BE LOCATED IN ADVANCE OF THE CLOSED LOOP / RAMP AS REQUIRED IN THE SEQUENCE OF CONSTRUCTION PLAN.

6. WHEN REQUIRED FOR BRIDGE CONSTRUCTION, (SETTING OF BRIDGE BEAMS) A "SLOW ROLL TEMPORARY TRAFFIC CONTROL" PROCEDURE ON RTE. 29 (SLOW ROLL TTC) SHALL BE PERFORMED WITH APPROVAL OF THE CITY OF LYNCHBURG TRAFFIC ENGINEER. SLOW ROLL TTC SHALL BE ACCORDING TO VDOT MEMORAMDUM NUMBER TE-352.

LEGEND

DENOTES CONSTRUCTION AREA

GROUP 2 CHANNELIZATION DEVICE

TRAFFIC PATTERN

SCALE
0 200' 400'
1" = 200'

COMMONWEALTH OF VIRGINIA
MICHAEL S. AGEE
Lic. No. 015232
PROFESSIONAL ENGINEER

MATTERN & CRAIG, INC
Roanoke, Virginia
(ROADWAY ENGINEER)

PROJECT	SHEET NO.
U000-118-204	IG(9)

PROJECT MANAGER STEVE_CAMPBELL_MATTERN & CRAIG (540)-345-9342
SURVEYED BY MATTERN_& _CRAIG_(540)-345-9342
DESIGN SUPERVISED BY CITY_OF_LYNCHBURG
DESIGN BY BANDY_DODSON_MATTERN_&_CRAIG

TRANSPORTATION MANAGEMENT PLAN
PHASE 3 STAGE 2
MAINTENANCE OF TRAFFIC & SEQUENCE OF CONSTRUCTION
(FOR S.B.L. LOOP / RAMP CLOSURES / CONST.)

REVISED	STATE	STATE ROUTE	STATE PROJECT	SHEET NO.
	VA.	29	U000-118-204,C-501	1G(10)

DESIGN FEATURES RELATING TO CONSTRUCTION OR TO REGULATION AND CONTROL OF TRAFFIC MAY BE SUBJECT TO CHANGE AS DEEMED NECESSARY BY THE DEPARTMENT

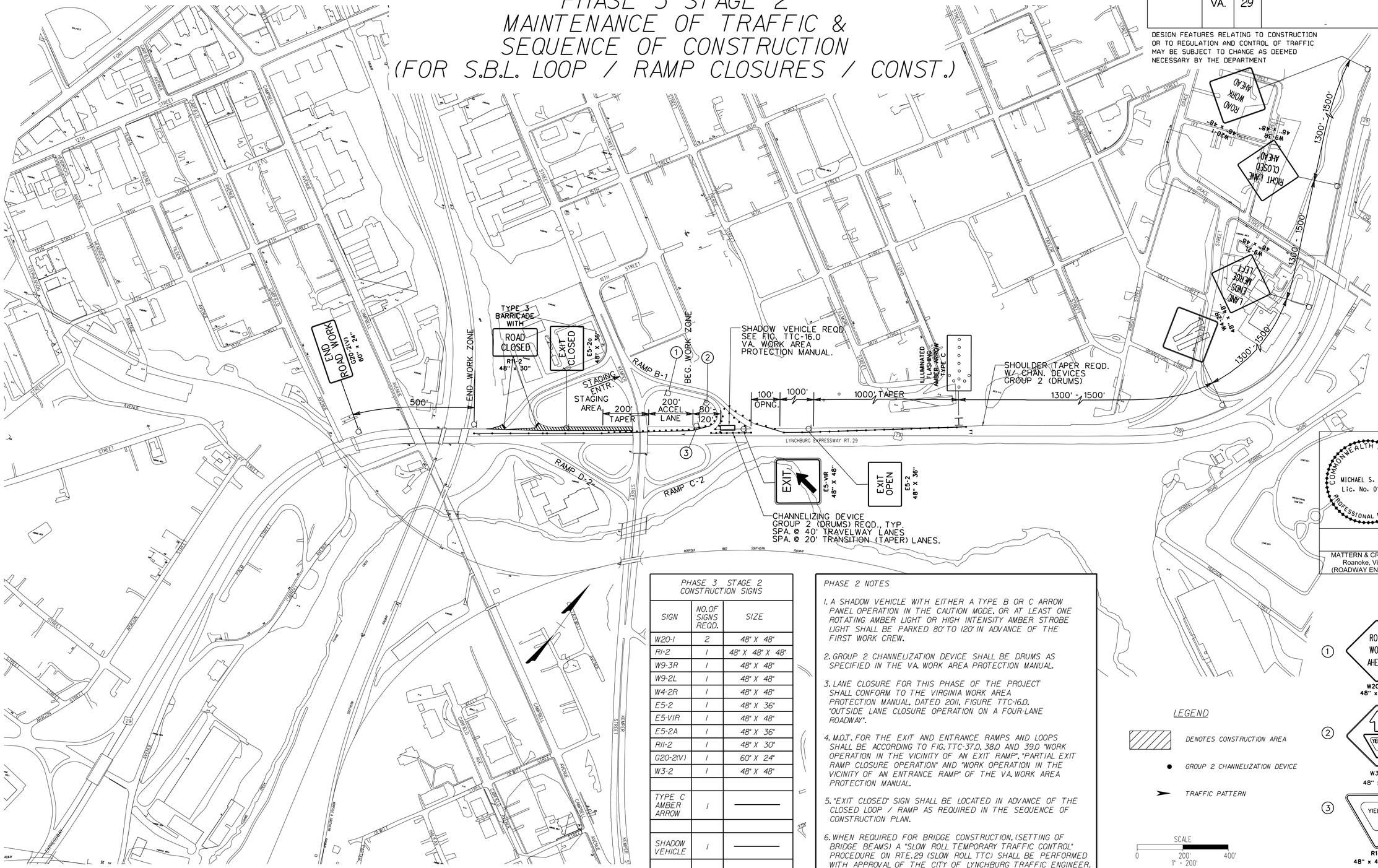

PHASE 3 STAGE 2 CONSTRUCTION SIGNS		
SIGN	NO. OF SIGNS REQD.	SIZE
W20-1	2	48" X 48"
R1-2	1	48" X 48" X 48"
W9-3R	1	48" X 48"
W9-2L	1	48" X 48"
W4-2R	1	48" X 48"
E5-2	1	48" X 36"
E5-VIR	1	48" X 48"
E5-2A	1	48" X 36"
R11-2	1	48" X 30"
G20-2(V)	1	60" X 24"
W3-2	1	48" X 48"
TYPE C AMBER ARROW	1	———
SHADOW VEHICLE	1	———

PHASE 2 NOTES

1. A SHADOW VEHICLE WITH EITHER A TYPE B OR C ARROW PANEL OPERATION IN THE CAUTION MODE, OR AT LEAST ONE ROTATING AMBER LIGHT OR HIGH INTENSITY AMBER STROBE LIGHT SHALL BE PARKED 80' TO 120' IN ADVANCE OF THE FIRST WORK CREW.

2. GROUP 2 CHANNELIZATION DEVICE SHALL BE DRUMS AS SPECIFIED IN THE VA. WORK AREA PROTECTION MANUAL.

3. LANE CLOSURE FOR THIS PHASE OF THE PROJECT SHALL CONFORM TO THE VIRGINIA WORK AREA PROTECTION MANUAL, DATED 2011, FIGURE TTC-16.0, "OUTSIDE LANE CLOSURE OPERATION ON A FOUR-LANE ROADWAY".

4. M.O.T. FOR THE EXIT AND ENTRANCE RAMPS AND LOOPS SHALL BE ACCORDING TO FIG. TTC-37.0, 38.0 AND 39.0 "WORK OPERATION IN THE VICINITY OF AN EXIT RAMP", "PARTIAL EXIT RAMP CLOSURE OPERATION" AND "WORK OPERATION IN THE VICINITY OF AN ENTRANCE RAMP" OF THE VA. WORK AREA PROTECTION MANUAL.

5. "EXIT CLOSED" SIGN SHALL BE LOCATED IN ADVANCE OF THE CLOSED LOOP / RAMP AS REQUIRED IN THE SEQUENCE OF CONSTRUCTION PLAN.

6. WHEN REQUIRED FOR BRIDGE CONSTRUCTION, (SETTING OF BRIDGE BEAMS) A "SLOW ROLL TEMPORARY TRAFFIC CONTROL" PROCEDURE ON RTE. 29 (SLOW ROLL TTC) SHALL BE PERFORMED WITH APPROVAL OF THE CITY OF LYNCHBURG TRAFFIC ENGINEER. SLOW ROLL TTC SHALL BE ACCORDING TO VDOT MEMORAMDUM NUMBER TE-352.

COMMONWEALTH OF VIRGINIA
MICHAEL S. AGEE
Lic. No. 015232
PROFESSIONAL ENGINEER

MATTERN & CRAIG, INC
Roanoke, Virginia
(ROADWAY ENGINEER)

LEGEND

DENOTES CONSTRUCTION AREA

GROUP 2 CHANNELIZATION DEVICE

TRAFFIC PATTERN

SCALE
0 200' 400'
1" = 200'

1 ROAD WORK AHEAD
W20-1
48" x 48"

2 YIELD
W3-2
48" x 48"

3 YIELD
R1-2
48" x 48" x 48"

PROJECT	SHEET NO.
U000-118-204	1G(10)

SUPERVISED BY CITY OF LYCHBURG
PROJECT MANAGER STEVE CAMPBELL, MATTERN & CRAIG (540)-345-9342
SURVEYED BY MATTERN & CRAIG (540)-345-9342
DESIGNED BY MIKE AGEE, MATTERN & CRAIG

TYPICAL SECTIONS

NO SCALE

DESIGN FEATURES RELATING TO CONSTRUCTION OR TO REGULATION AND CONTROL OF TRAFFIC MAY BE SUBJECT TO CHANGE AS DEEMED NECESSARY BY THE DEPARTMENT

REVISED	STATE	FEDERAL AID PROJECT	STATE ROUTE	STATE PROJECT	SHEET NO.
	VA.		29	U000-118-204, C-501	2

COMMONWEALTH OF VIRGINIA
MICHAEL S. AGEE
Lic. No. 015232
PROFESSIONAL ENGINEER

MATTERN & CRAIG, INC
Roanoke, Virginia
(ROADWAY ENGINEER)

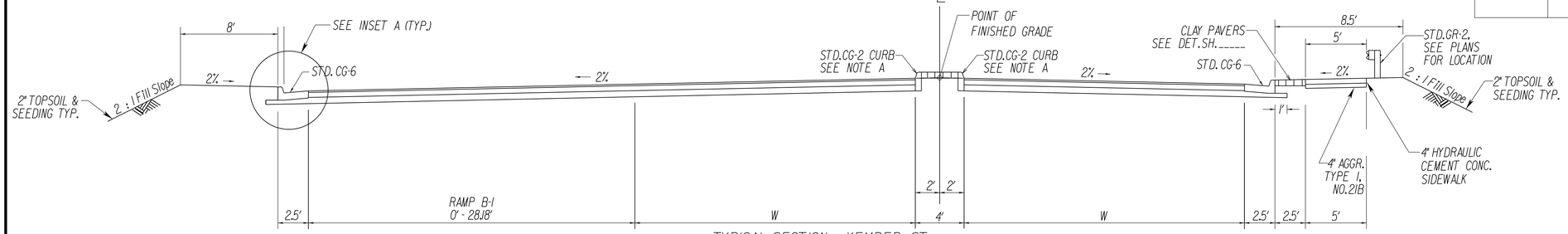

TYPICAL SECTION - KEMPER ST.

STATION	TO	STATION	REMARKS
12+82.03 RT.		14+17.44 RT.	W = 23'
14+17.44 RT.		14+68.77 RT.	W VARIES 23' TO 21.67'
14+68.77 RT.		14+91.94 RT.	W = 21.67'
13+59.00 LT.		15+03.50 LT.	W VARIES - SEE PLAN

NOTE A: CLAY PAVERS REQ'D IN MEDIAN FROM STA.12+82.03 TO STA.14+91.94

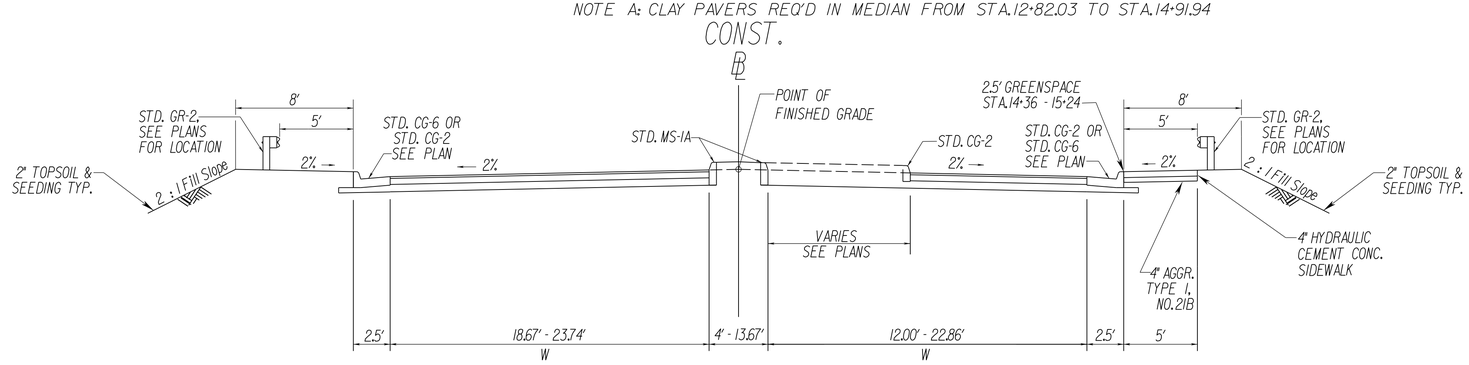

TYPICAL SECTION - KEMPER ST.

STATION	TO	STATION	REMARKS
14+91.94 RT.		16+39.98 RT.	W VARIES - SEE PLAN
15+03.50 LT.		16+08.00 LT.	W VARIES - SEE PLAN
16+08.00 LT.		16+39.00 LT.	W = 21.67'
16+39.98		18+09.66	W = 23.67' LT.& RT.
18+09.66		18+59.94	W = 23.67' LT.& RT.
18+59.94 RT.		19+48.00 RT.	W = 23.67'
19+52.25 RT.		20+33.00 RT.	W = 20.67'
18+59.94 LT.		21+07.00 LT.	W VARIES - SEE PLAN
21+07.00 LT.		22+75.00 LT.	W = 24'
18+59.94		21+07.00	LEFT SIDE OF MEDIAN WARIES FROM 2' TO 5.5', RIGHT SIDE MEDIAN IS 5' WIDE

INSET "A" (TYP.)

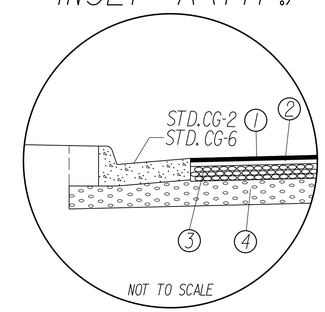

1. ASPHALT CONCRETE SURFACE COURSE TYPE SM-9.5D @ 180LBS/SY.
2. ASPHALT CONCRETE INTERMEDIATE COURSE IM-19.0D @ 220LBS/SY.
3. 6" ASPHALT CONCRETE BASE COURSE TYPE BM-25.0 @ 678 LBS/SY
4. 10" AGGREGATE BASE MATERIAL TYPE I NO.21B

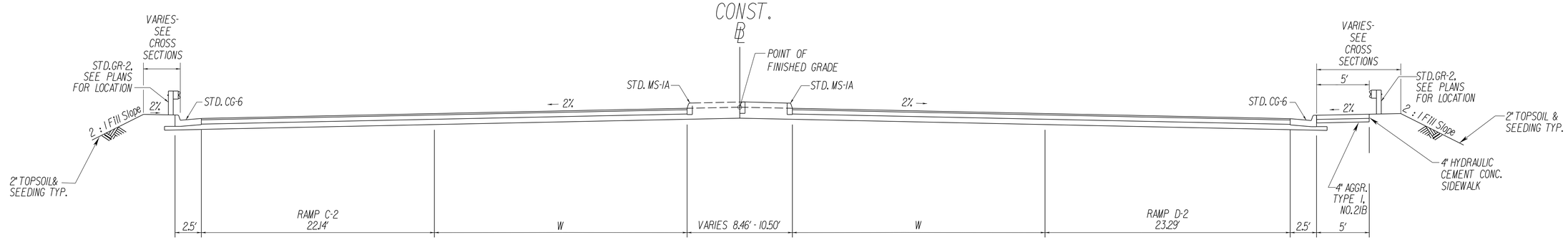

	STATION	TO	STATION	REMARKS
KEMPER ST.	20+33.00 RT.		21+27.50 RT.	W VARIES - SEE PLAN
KEMPER ST.	21+27.50 RT.		22+75.00 RT.	W = 24'

PLAN NO.	PROJECT	FILE NO.	SHEET NO.
	U000-118-204		2

SUPERVISED BY CITY OF LYNCHBURG
PROJECT MANAGER STEVE CAMPBELL, MATTERN & CRAIG (540)-345-9342
SURVEYED BY MATTERN & CRAIG (540)-345-9342
DESIGNED BY MIKE AGEE, MATTERN & CRAIG

TYPICAL SECTIONS

NO SCALE

DESIGN FEATURES RELATING TO CONSTRUCTION OR TO REGULATION AND CONTROL OF TRAFFIC MAY BE SUBJECT TO CHANGE AS DEEMED NECESSARY BY THE DEPARTMENT

REVISED	STATE	FEDERAL AID PROJECT	STATE ROUTE	STATE PROJECT	SHEET NO.
	VA.		29	U000-118-204,C-501	2A

COMMONWEALTH OF VIRGINIA
MICHAEL S. AGEE
Lic. No. 015232
PROFESSIONAL ENGINEER

MATTERN & CRAIG, INC
Roanoke, Virginia
(ROADWAY ENGINEER)

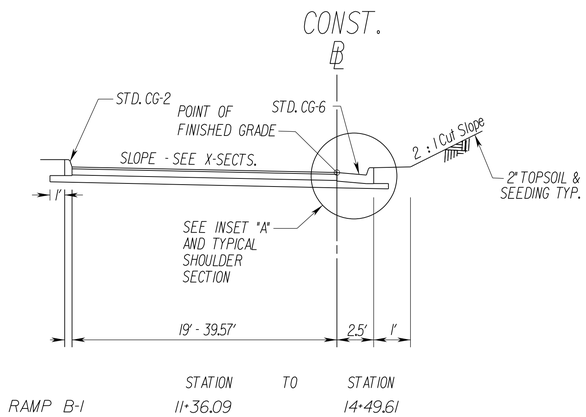

	STATION	TO	STATION
RAMP B-1	11+36.09		14+49.61

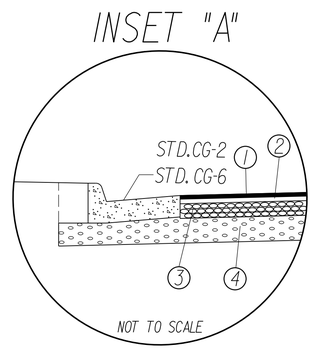

1. ASPHALT CONCRETE SURFACE COURSE TYPE SM-9.5D @ 180LBS/SY.
2. ASPHALT CONSRETE INTERMEDIATE COURSE IM-19.0D @ 220LBS/SY.
3. 6" ASPHALT CONCRETE BASE COURSE TYPE BM-25.0 @ 678 LBS/SY
4. 10" AGGREGATE BASE MATERIAL TYPE I NO.21B

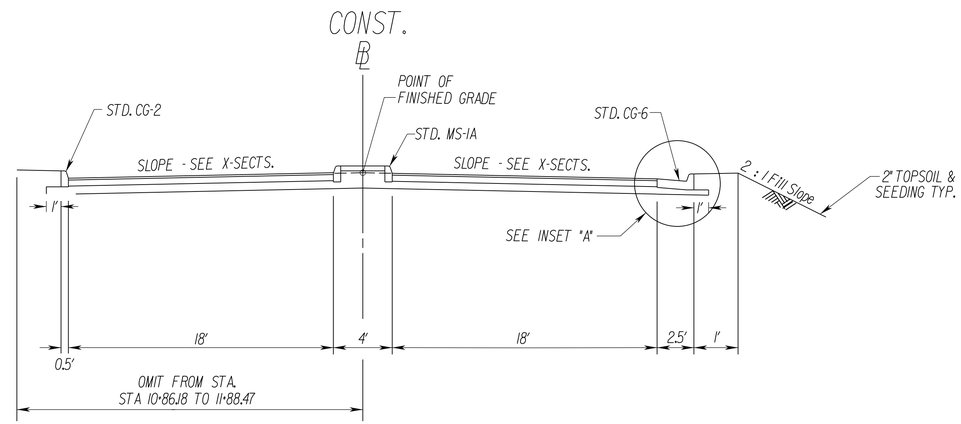

	STATION	TO	STATION	REMARKS
RAMP B-2	10+27.80		11+88.47	

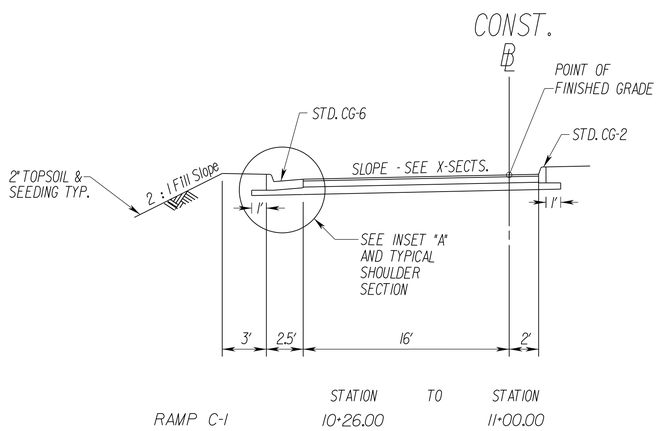

	STATION	TO	STATION
RAMP C-1	10+26.00		11+00.00

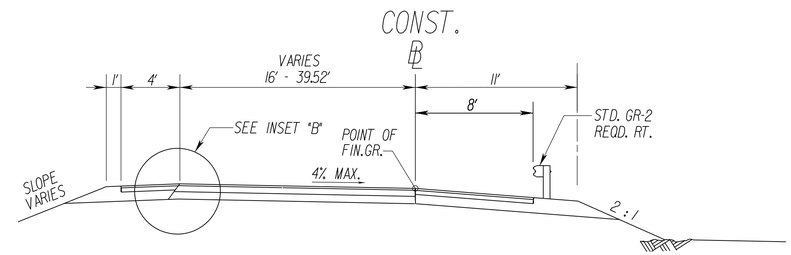

	STATION	TO	STATION
RAMP C-2	13+63.84		14+87.83

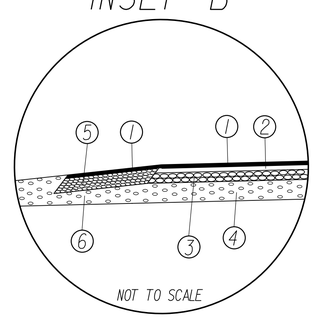

1. ASPHALT CONCRETE SURFACE COURSE TYPE SM-9.5D @ 180LBS/SY.
2. ASPHALT CONSRETE INTERMEDIATE COURSE IM-19.0D @ 220LBS/SY.
3. 6" ASPHALT CONCRETE BASE COURSE TYPE BM-25.0 @ 678 LBS/SY
4. 10" AGGREGATE BASE MATERIAL TYPE I NO.21B
5. 8" ASPHALT CONCRETE BASE COURSE TYPE BM-25.0 @ 904 LBS/SY
6. VAR. DEPTH AGGREGATE BASE MATERIAL TYPE I NO.21B.

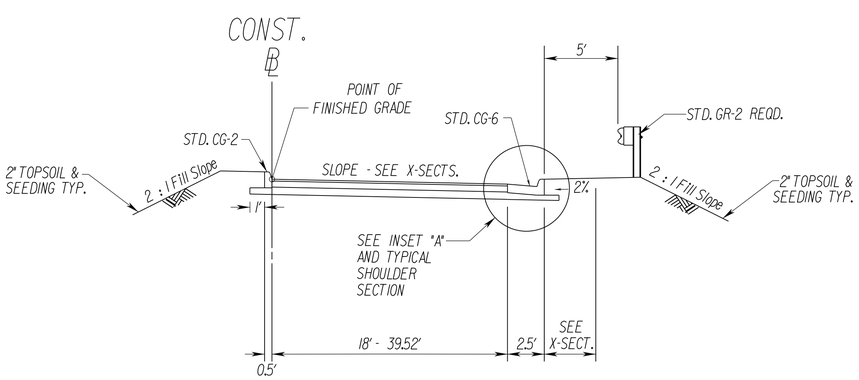

	STATION	TO	STATION
RAMP C-2	12+77.35		13+63.84

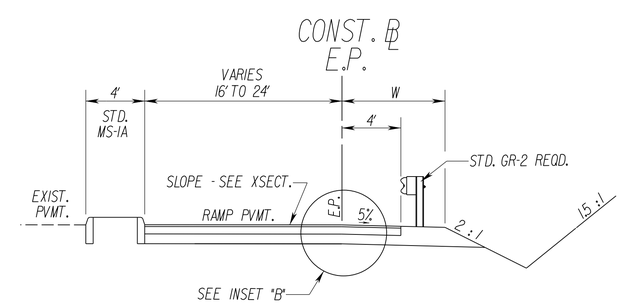

	STATION	TO	STATION	REMARKS
RAMP B-1	10+00.00 RT.		10+75.00 RT.	W=7' W/4' PAVED SHLD., GUARDRAIL REQD.
RAMP B-1	10+75.00 RT.		11+36.23 RT.	W=4' PAVED SHLD.ONLY, GUARDRAIL NOT REQD.

PLAN NO.	PROJECT	FILE NO.	SHEET NO.
	U000-118-204		2A

SUPERVISED BY CITY OF LYNCHBURG
PROJECT MANAGER STEVE CAMPBELL, MATTERN & CRAIG (540)-345-9342
SURVEYED BY MATTERN & CRAIG (540)-345-9342
DESIGNED BY MIKE AGEE, MATTERN & CRAIG

TYPICAL SECTIONS

NO SCALE

DESIGN FEATURES RELATING TO CONSTRUCTION OR TO REGULATION AND CONTROL OF TRAFFIC MAY BE SUBJECT TO CHANGE AS DEEMED NECESSARY BY THE DEPARTMENT

REVISED	STATE	FEDERAL AID PROJECT	STATE ROUTE	STATE PROJECT	SHEET NO.
	VA.		29	U000-118-204, C-501	2B

COMMONWEALTH OF VIRGINIA
MICHAEL S. AGEE
Lic. No. 015232
PROFESSIONAL ENGINEER

MATTERN & CRAIG, INC
Roanoke, Virginia
(ROADWAY ENGINEER)

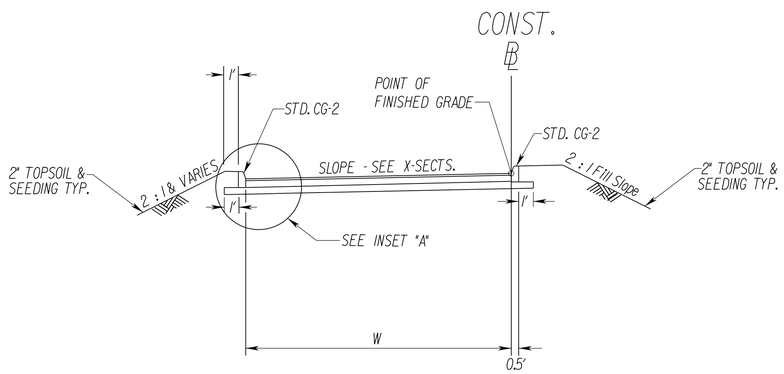

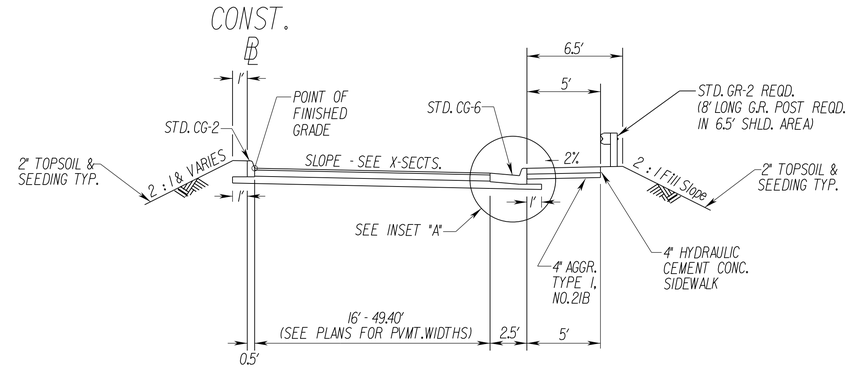

	STATION	TO	STATION	REMARKS
RAMP D-1	13+30.00		14+52.36	W - VARIES, SEE PLAN
	14+52.36		16+50.45	SEE RAMP D-2 CROSS SECTIONS, PROFILE AND TYP. SECTION
	16+50.45		17+68.06	W = 24'

	STATION	TO	STATION	REMARKS
RAMP D-2	10+00.00		13+13.00	OMIT CONC. SIDEWALK
	13+13.00		13+42.28	SIDEWALK REQD.

(TYPICAL SECTION INCLUDES RAMP D-1, STA. 14+52.36 TO 16+50.45)

INSET "A"

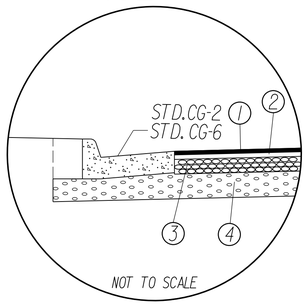

1. ASPHALT CONCRETE SURFACE COURSE TYPE SM-9.5D @ 180LBS/SY.
2. ASPHALT CONSRETE INTERMEDIATE COURSE IM-19.0D @ 220LBS/SY.
3. 6" ASPHALT CONCRETE BASE COURSE TYPE BM-25.0 @ 678 LBS/SY
4. 10" AGGREGATE BASE MATERIAL TYPE I NO.21B

PLAN NO.	PROJECT	FILE NO.	SHEET NO.
	U000-118-204		2B

SUPERVISED BY CITY OF LYCHBURG
PROJECT MANAGER STEVE CAMPBELL, MATTERN & CRAIG (540)-345-9342
SURVEYED BY MATTERN & CRAIG (540)-345-9342
DESIGNED BY MIKE AGEE, MATTERN & CRAIG

TYPICAL DITCH SECTIONS

NO SCALE

DESIGN FEATURES RELATING TO CONSTRUCTION OR TO REGULATION AND CONTROL OF TRAFFIC

REVISED	STATE	FEDERAL AID PROJECT	STATE ROUTE	STATE PROJECT	SHEET NO.
	VA.		29	U000-118-204, C-501	2C

COMMONWEALTH OF VIRGINIA
MICHAEL S. AGEE
Lic. No. 015232
PROFESSIONAL ENGINEER

MATTERN & CRAIG, INC
Roanoke, Virginia
(ROADWAY ENGINEER)

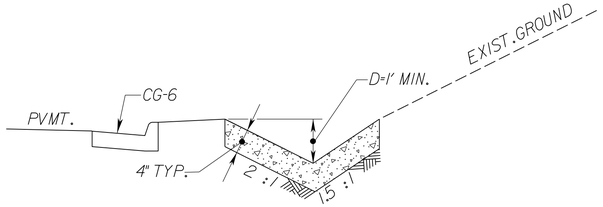

DITCH DETAIL D
MOD. PG-2A, TYPE E

NO SCALE

SEE STD. PG-2A FOR DETAILS NOT SHOWN

STATION	TO	STATION	REMARKS
11+36.00 RT.		13+35.00 RT.	RAMP B-1

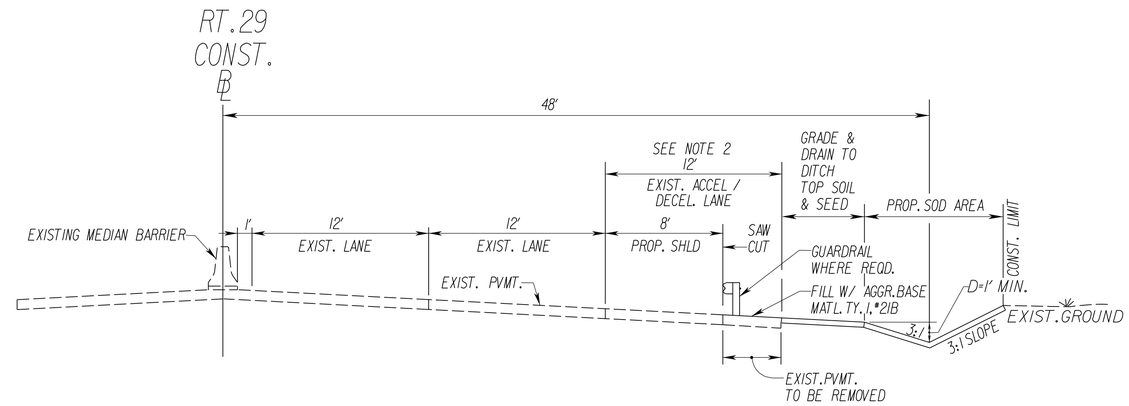

PROPOSED SOD V DITCH DETAIL E

NO SCALE

STATION	TO	STATION	REMARKS
20+40.00 RT.		22+40.00 RT.	LYNCHBURG EXPRESSWAY (RT. 29)

NOTE 2: EXISTING ACCEL./ DECEL. LANE SHALL BE TAKEN OUT OF SERVICE. 8' OF THE EXISTING ACCEL./ DECEL. LANE SHALL REMAIN IN PLACE AND BECOME THE PAVED SHOULDER FOR RTE. 29. THE REMAINDER OF THE ACCEL./ DECEL. SHALL BE REMOVED. WHERE GUARDRAIL IS REQUIRED (SEE PLAN) PLACE FACE OF GUARDRAIL AT THE EDGE OF THE 8' PAVED SHOULDER.

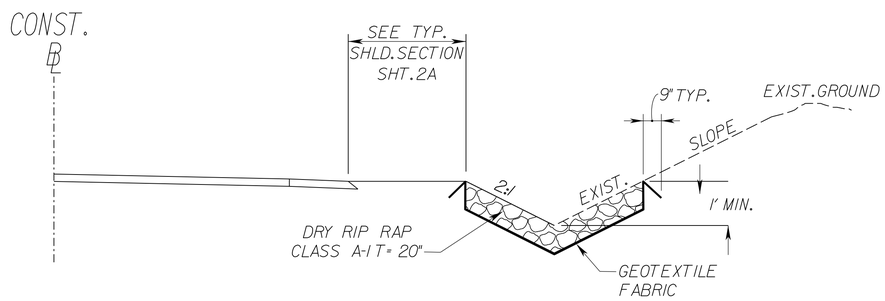

DITCH DETAIL A

NO SCALE

STATION	TO	STATION	REMARKS
10+75.00 RT.		11+36.00 RT.	RAMP B-1

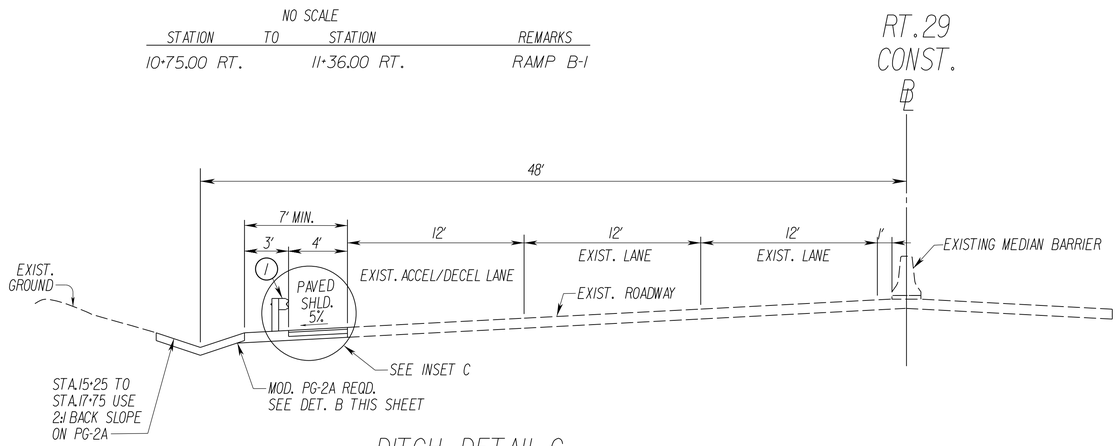

DITCH DETAIL C

NO SCALE

STATION	TO	STATION	REMARKS
12+20.00 LT.		17+75.00 LT.	LYNCHBURG EXPRESSWAY (RT. 29)

* SEE ROUTE 29 CROSS SECTION SHEETS FOR SLOPES

(1) GUARDRAIL WHERE REQD., SEE PLANS.

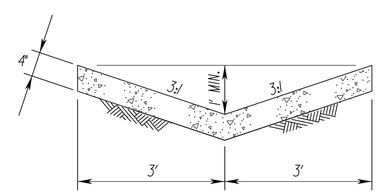

SEE STD. PG-2A DETAIL IN THE VDOT ROAD AND BRIDGE STANDARDS FOR DITCH TRANSITION AND DETAILS NOT SHOWN.

DITCH DETAIL B
MOD. PG-2A

NO SCALE

NOTE: 3:1 BACKSLOPE MAY VARY IF REQD. TO MEET EXIST. GROUND.

INSET "C"

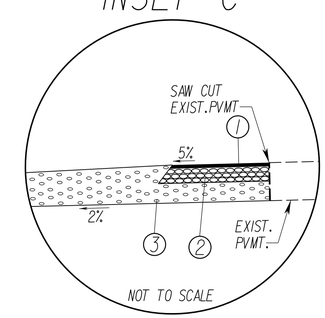

(1) ASPHALT CONCRETE SURFACE COURSE TYPE SM-9.5D @ 180LBS/SY.

(2) 8" ASPHALT CONCRETE BASE COURSE TYPE BM-25.0 @ 904 LBS/SY

(3) 8" AND VAR. AGGREGATE BASE MATERIAL TYPE I NO. 21B.

PLAN NO.	PROJECT	FILE NO.	SHEET NO.
	U000-118-204		2C

SUPERVISED BY CITY OF LYNCHBURG
PROJECT MANAGER STEVE CAMPBELL, MATTERN & CRAIG (540)-345-9342
SURVEYED BY MATTERN & CRAIG (540)-345-9342
DESIGNED BY MIKE AGEE, MATTERN & CRAIG

GENERAL NOTES

DESIGN FEATURES RELATING TO CONSTRUCTION OR TO REGULATION AND CONTROL OF TRAFFIC MAY BE SUBJECT TO CHANGE AS DEEMED NECESSARY BY THE DEPARTMENT

REVISED	STATE	FEDERAL AID PROJECT	STATE ROUTE	STATE PROJECT	SHEET NO.
	VA.		29	U000-118-204, C-501	2D

DRAINAGE

D-1 The horizontal location of all drainage structures shown on these plans is approximate only, with the exception of structures showing specific stations, special design bridges and storm sewer systems.

D-2 The horizontal location and invert elevations shown for proposed culverts and storm sewer outfall pipes are based on existing survey data and required design criteria. If during construction, it is found that the horizontal location or invert elevations shown on the plans differ significantly from the horizontal location or elevations of the stream or swale in which the culvert or storm sewer outfall pipe is to be placed, the Contractor shall confer with, and get approval from, the City Engineer before installing the culvert or storm sewer outfall pipe.

D-3 The "H" dimensions shown on plans for drop inlets and junction boxes and the "L.F." dimensions shown for manholes are for estimating purposes and are based on the proposed invert elevations shown for the structure and the anticipated top (rim) elevation based on existing or proposed finished grade. The actual "H" or "L.F." dimensions are to be determined by the contractor from field conditions.

D-7 All pipe on this project shall be concrete unless otherwise noted. For strength, sheet thickness, or class designation; available sizes; height of cover limitations; and other restrictions for a particular pipe type or height cover, see the applicable sections of the VDOT Road and Bridge Standards PC-1.

D-8 Where open joint pipe is to be used, no joint shall be opened a distance exceeding 25% of the spigot length. Sealing of the pipe joint shall be in accordance with Section 302 of the applicable VDOT Road and Bridge Specifications.

D-9 A pipe joint length different from that stated on the plans may be used. An adjustment in the percentage of open joint (not to exceed 25% of the spigot length) or amount of bevel shall be made that will obtain the radius stated on the plans. Extra payment for this adjustment will not be allowed. The proposed adjustment shall be approved by the City Engineer prior to installation of the pipe line.

D-10 The proposed riprap may be omitted if the slope designated for placement of riprap is found to be comprised of solid rock or closely consolidated boulders with soundness, size and weight equal to, or exceeding, the specifications for the proposed riprap with approval of the City Engineer.

D-11 The proposed grandular filter blanket for the proposed riprap may be omitted if the slope on which it is to be placed is found to be comprised of material which is coarser than that specified for the proposed granular filter blanket with approval of the City Engineer.

D-12 All existing drainage facilities labeled "To Be Abandoned" shall be left in place, backfilled and plugged in accordance with the VDOT Road and Bridge Standard PP-1. Basis of Payment will be C.Y. of Flowable Backfill.

D-13 Existing drainage facilities being utilized as a part of the drainage system, and designated on the plans "To Be Cleaned Out" shall be cleaned. The cost incidental to this shall be included in the contract price for other items.

D-14 Proposed drop inlets with a height (H) less than the standard minimum shown in the VDOT Road and Bridge Standards shall be considered and paid for as Standard Drop Inlets for the type specified.

D-16 When CG-6 or CG-7 is specified on a radius (such as at a street intersection), the City Engineer may approve a decrease in the cross slope of the gutter to facilitate proper drainage.

D-17 St'd. SL-1 Safety Slab locations are based on the assumed use of precast structures. If cast-in-place structures are utilized, and the interior chamber dimensions (length and width, or diameter) are less than 4 feet, the safety slabs shall not be installed.

NOTE: Pipe backfill shall be performed in accordance with VDOT Standard PB-1 unless noted herein. Regular backfill material within the limits of the roadway embankments and under existing or proposed roadway shall meet a minimum CBR value of 15.0 as determined by AASHTO T 193. The furnishing, placement and compaction of the regular backfill and disposal of trench excavation shall be included in the price of the pipe and shall not be measured and paid separately. When pipe does not project above the ground line Regular Backfill shall extend to top of pipe trench or pavement subgrade.

GRADING

G-1 The grade line denotes top of finished pavement unless shown otherwise on typical sections or plans.

G-4 The cost of removal of all existing concrete items located in the area to be graded, including, but not limited to the following, shall be included in the price bid for earthwork: sidewalk, curb & gutter, small footings, retaining walls, pole foundations block and masonry items, drainage structures, concrete ditches and medians, culverts, pipes, RipRap, fences and gates.

G-5 All grading (regular excavation, embankment, etc.) shall be considered as "Earthwork" and be paid for on a lump sum basis, unless included in payment for other bid items.

INCIDENTALS

I-4 All trees located within the Clear Zone or within a minimum of 30 feet of the edge of pavement, within the limits of the right of way or construction easement, unless otherwise noted on plans or directed by the City Engineer, shall be removed, as provided for a Section 301 of the applicable VDOT Road and Bridge Specifications.

I-7 Where Standard slope roundoffs would damage trees, bushes or other desirable vegetation, they shall be omitted when so ordered by the City Engineer.

I-14 Salvaged guardrail materials not used in the new construction shall become the property of the Contractor and shall be disposed of at a licensed landfill, recycled or be retained by the Contractor.

I-18 All pavement markings and traffic flow arrows shown on the roadway construction plans are schematic only. The actual location and application of pavement markings shall be in accordance with Section 704 of the applicable VDOT Road and Bridge Specifications, MUTCD, sequence of construction/traffic control plans, pavement marking plan sheets 8(1) thru 8(3) and as directed by the Engineer.

I-19 The following sources, under contract with The City of Lynchburg, have provided information on this project:

Hydraulic Design - Mattern & Craig
Roadway Design - Mattern & Craig
Utility Design - Mattern & Craig
Utility Designation - Miss Utility
Utility Location -
Survey - Mattern & Craig
Bridge Design - Mattern & Craig

If questions or problems arise during construction, please contact the City of Lynchburg, Va. Department of Public Works.

I-20 The Official Electronic .pdf Version of the plans will override the paper copies or prints of specific layers.

Portions of this plan assembly have been CADD generated. To assist in the construction of the project electronic files will be available to the prime contractor during bids and after award of the contract.

I-21 All electronic plan assemblies will include the construction plans in two formats: .pdf files and MicroStation format (.dgn) files. Only the .pdf files will be considered as part of the official plan assembly.

The MicroStation format (.dgn) files are furnished only as information for the contractor. These plans are developed in layers (levels) to aid in readability. However, the construction items may or may not be in the proper layering scheme as described in the VDOT CADD Manual. The MicroStation files will only match the scanned files if all levels are turned on. A MicroStation Software license is required to be able to read these files.

NOTE: Manual adjustments have been made on the computer plotted cross-sections. The applicable listings do not reflect the corrections and/or additions.

PAVEMENT

P-1 If any settlement occurs in concrete pavement adjacent to bridges prior to acceptance of the project by the City of Lynchburg, the contractor shall restore the pavement to the original grade either by the mud jack method or by replacing the pavement. In the event the pavement cracks or becomes damaged, it shall be replaced, if directed by the city.

P-2 The pavement materials on this project will be paid for on a tonnage basis. The weight will vary in accordance with the specific gravity of the aggregates and the asphaltic content of the mix actually used to secure the design depth. The weight of the asphalt concrete is based on 95% of the theoretical maximum density.

MISC. ITEMS

1. All standard curbs associated with ramps to be demolished shall be removed.

2. Installation of storm sewers may require additional cut for pipe bedding due to rocky soil conditions. Bedding material shall be as noted in the VDOT specifications.

   If suitable regular backfill material cannot be obtained from trench excavation, class 1 backfill (Aggr. 21B) shall be placed as backfill.

3. Full depth sawcut required where existing and proposed pavements join to create a clean, vertical joint for quality construction. Tie-in to existing pavements along the Lynchburg Expressway (RT.29) shall be milled to a depth of 2 inches a minimum of 5 feet beyond the sawcut.

4. Contractor shall match all existing pavement edges and pavement markings where new pavement/pavement markings meet existing pavement/pavement markings.

SUPERVISED BY CITY OF LYNCHBURG
PROJECT MANAGER STEVE CAMPBELL, MATTERN & CRAIG (540)-345-9342
SURVEYED BY MATTERN & CRAIG (540)-345-9342
DESIGNED BY MIKE AGEE, MATTERN & CRAIG

REVISED	STATE	STATE ROUTE	STATE PROJECT	SHEET NO.
	VA.	29	U000-118-204, C-501	2E(1)

DESIGN FEATURES RELATING TO CONSTRUCTION OR TO REGULATION AND CONTROL OF TRAFFIC MAY BE SUBJECT TO CHANGE AS DEEMED NECESSARY BY THE DEPARTMENT

EROSION AND SEDIMENT CONTROL SUMMARY

Sheet Number	Rock Check Dam, (Std. 3.20)	Temp. Silt Fence, (Std. 3.05)	Inlet Protection, (Std. 3.07)	Sediment Basin Excavation (For use with Typical Sediment Trap, Std. 3.13)	Temporary Diversion Dike, (Std. 3.09)	Outlet Protection, (Std. 3.18)	Stabilized Construction Entrance, (Std. 3.02) *	Siltation Control Excavation	Stormwater Conveyance Channel, (Std. 3.17) **
	EA	LF	EA	CY	Foot	Ton	EA	CY	LF
13(3)	12	1258	5	21	350	3	1	273	360
13(4)	9	2442	15	23	463	5	–	551	215
13(5)	3	940	5	14	75	–	1	196	–
6	–	*** 500	1	–	–	–	–	85	–
Total		24	5140	26	58	888	8	2 *	1105	575

* Not a pay item.

** Storm Water Conveyance Channel Shall Be Included In Cost of Temporary Diversion Dike.

*** To Be Placed As Reqd. For Demo And Obscuring NW RAMP And Loop Area Sheet 3 And 6.

SUPERVISED BY CITY OF LYNCHBURG
PROJECT MANAGER STEVE CAMPBELL MATTERN & CRAIG (540)-345-9342
SURVEYED BY MATTERN & CRAIG (540)-345-9342
DESIGNED BY MIKE AGEE MATTERN & CRAIG

DESIGN FEATURES RELATING TO CONSTRUCTION OR TO REGULATION AND CONTROL OF TRAFFIC MAY BE SUBJECT TO CHANGE AS DEEMED NECESSARY BY THE DEPARTMENT

REVISED	STATE	FEDERAL AID PROJECT	ROUTE	STATE PROJECT	SHEET NO.
	VA.		29	U000-118-204,C-501	2E(2)

DRAINAGE SUMMARY

Project Number	STRUCTURE NO.	DESIGN INVERT ELEVATION	HEIGHT OF STRUCTURE (H)	DI-7A	DROP INLETS DI-3B LENGTH 6'	DI-3B LENGTH 8'	DI-3B LENGTH 10'	DI-3B LENGTH 12'	DI-3B LENGTH 14'	DI-3BB LENGTH 6'	DI-2B LENGTH 12'	MANHOLE MH-1 OR MH-2	MANHOLE FRAME AND COVER	ENDWALLS CONC. CLASS A3 MISC		REMARKS
			FT	EA	EA	EA	EA	EA	EA	EA	EA	L.F.		CY		
CITY OF LYNCHBURG, KEMPER STREET OVER LYNCHBURG EXPRESSWAY (RT. 29)	-	-	-	-	-	-	-	-	-	-	-	-	-	-	-	
	-	-	-	-	-	-	-	-	-	-	-	-	-	-	-	
	3-3	697.30	4.6	-	-	1	-	-	-	-	-	-	-	-	-	
	3-4	685.89	3.9	-	-	-	-	-	-	-	1	-	-	-	-	
	3-5	684.96	4.1	-	1	-	-	-	-	-	-	-	-	-	-	
	3-6	684.74	-	-	-	-	-	-	-	-	-	-	-	0.492	-	
	4-1	689.46	5.2	-	1	-	-	-	-	-	-	-	-	-	-	
	4-2	688.94	5.4	-	-	1	-	-	-	-	-	-	-	-	-	
	4-3	688.51	-	-	-	-	-	-	-	-	-	-	-	0.492	-	
	4-4	680.03	6.1	-	-	-	-	-	1	-	-	-	-	-	-	PRECAST STRUCTURE REQD.. 1" LOCAL DEPRESSION (SUMP) REQD. AT INLET THROAT.
	4-5	678.37	7.2	-	-	-	-	-	-	-	-	7.2	1	-	-	INSTALL NEW MANHOLE AND TIE IN EXIST. 18" OUTLET PIPE D11-D12
	4-6	677.38	3.9	-	-	-	1	-	-	-	-	-	-	-	-	
	4-7	674.90	-	-	-	-	-	-	-	-	-	-	-	0.492	-	
	4-8	670.57	3.9	-	-	1	-	-	-	-	-	-	-	-	-	
	4-9	668.90	3.9	-	-	1	-	-	-	-	-	-	-	-	-	
	4-10	657.15	10.1	-	-	-	-	-	-	1	-	-	-	-	-	INSTALL NEW DROP INLET AND TIE IN EXIST. 18" OUTLET PIPE D24-D25
	4-11A	668.32	-	-	-	-	-	-	-	-	-	-	-	0.492	-	
	4-12	667.47	5.9	-	-	-	-	1	-	-	-	-	-	-	-	
	4-13	665.01	6.7	-	-	-	-	1	-	-	-	-	-	-	-	
	5-1	665.39	4.3	-	1	-	-	-	-	-	-	-	-	-	-	
	5-2	664.33	-	-	-	-	-	-	-	-	-	-	-	0.492	-	
	5-3	663.34	4.1	-	-	1	-	-	-	-	-	-	-	-	-	
	5-4	662.58	-	-	-	-	-	-	-	-	-	-	-	0.492	-	
	6-1	*656.81	6.59	1	-	-	-	-	-	-	-	-	-	-	-	CONN. TO EXIST. 4'X5' CONC. CULVERT.
	D3	-	-	-	-	-	-	-	-	-	-	-	-	-	-	REMOVE STRUCTURE
	D6	-	-	-	-	-	-	-	-	-	-	-	-	-	-	REMOVE STRUCTURE
	D7	-	-	-	-	-	-	-	-	-	-	-	-	-	-	REMOVE STRUCTURE
	D8	-	-	-	-	-	-	-	-	-	-	-	-	-	-	REMOVE STRUCTURE
	D9	-	-	-	-	-	-	-	-	-	-	-	-	-	-	REMOVE STRUCTURE
	D10	-	-	-	-	-	-	-	-	-	-	-	-	-	-	REMOVE STRUCTURE
	D11	-	-	-	-	-	-	-	-	-	-	-	-	-	-	REMOVE STRUCTURE
	D13	-	-	-	-	-	-	-	-	-	-	-	-	-	-	REMOVE STRUCTURE
	D14	-	-	-	-	-	-	-	-	-	-	-	-	-	-	REMOVE STRUCTURE
	D20	-	-	-	-	-	-	-	-	-	-	-	-	-	-	ADJUST EXISTING MANHOLE FRAME AND COVER. MATCH FINISH GRADE.
	D29	-	-	-	-	-	-	-	-	-	-	-	-	-	-	REMOVE STRUCTURE
	D30	-	-	-	-	-	-	-	-	-	-	-	-	-	-	REMOVE STRUCTURE
	D31	-	-	-	-	-	-	-	-	-	-	-	-	-	-	REMOVE STRUCTURE
	D33	-	-	-	-	-	-	-	-	-	-	-	-	-	-	REMOVE STRUCTURE
	D39	-	-	-	-	-	-	-	-	-	-	-	-	-	-	REMOVE STRUCTURE
	D40	-	-	-	-	-	-	-	-	-	-	-	-	-	-	REMOVE STRUCTURE
	D52															REMOVE STRUCTURE
	TOTAL			1	3	5	1	2	1	1	1	7.2	1	3	-	

* ELEVATION IS APPROXIMATE.

FLOWABLE BACKFILL
CY
18

STORM DRAIN PIPES

FROM CODE	FROM OUTLET ELEV.	TO CODE	TO INLET ELEV.	% GRADE	CONCRETE PIPE (LENGTH AND SIZE L.F.) 15"	
3-4	685.89	3-5	685.16	1.46	50	-
3-5	684.96	3-6	684.74	0.51	43	-
3-3	697.30	4-2	689.14	6.18	132	-
4-1	689.46	4-2	689.15	1.11	28	-
4-2	688.94	4-3	688.51	2.05	21	-
4-4	680.03	4-5	678.50	15.30	10	-
4-6	677.38	4-7	674.90	4.86	51	-
4-9	668.90	4-11A	668.32	1.53	38	-
4-8	670.57	4-12	667.67	3.41	85	-
4-12	667.47	5-1	665.77	2.93	58	-
5-1	665.39	5-2	664.33	10.60	10	-
4-13	665.01	5-3	663.54	2.01	73	-
5-3	663.34	5-4	662.58	6.33	12	-
-	-	-	-	-	-	-
TOTAL:					611	-

PLAN NO.	PROJECT	FILE NO.	SHEET NO.
	U000-118-204		2E(2)

SUPERVISED BY CITY OF LYNCHBURG
PROJECT MANAGER STEVE CAMPBELL, MATTERN & CRAIG (540)-345-9342
SURVEYED BY MATTERN & CRAIG (540)-345-9342
DESIGNED BY MIKE AGEE, MATTERN & CRAIG

REVISED	STATE	STATE ROUTE	STATE PROJECT	SHEET NO.
	VA.	29	U000-118-204, C-501 See Tabulation Below For Section Numbers	2E(3)

DESIGN FEATURES RELATING TO CONSTRUCTION OR TO REGULATION AND CONTROL OF TRAFFIC MAY BE SUBJECT TO CHANGE AS DEEMED NECESSARY BY THE DEPARTMENT

PAVEMENT SUMMARY

			SURFACE			INTERMEDIATE			BASE COURSE					SUBBASE					SHOULDERS			
SHEET NO.	LOCATION	STATION TO STATION	AREA	ASPH. CONC. TYPE SM-9.5D (180LBS/SY)		AREA	ASPH. CONC. (220 LBS/SY)		AREA	ASPH. CONC. BASE COURSE BM-25.0 (6" DEPTH)				AREA	AGGR. BASE MAT'L TYPE I 21B (10" DEPTH)		AGGR BASE MAT'L TYPE I 21B (VAR. DEPTH)		AREA	ASPH. CONC. TYPE SM-9.5D (180LBS/SY)	ASPH. CONC. BASE COURSE BM-25.0 (8" DEPTH)	AGGR. BASE MAT'L TYPE I 21B
			SY	TON		SY	TON		SY	TON				SY	TON**		TON**		SY	TON	TON	TON**
3	KEMPER ST.	STA.12+82 TO STA. 16+30	1679	152	-	1679	185	-	1679	570	-	-	-	1679	1043	-	234	-	-	-	-	-
	RAMP B-1	STA.10+00 TO STA. 13+37.57	972	88	-	972	107	-	972	330	-	-	-	972	604	-		-	60	5	27	97
	RAMP B-2	STA.10+27.80 TO STA. 11+88.47	627	57	-	627	69	-	629	213	-	-	-	629	390	-		-	-	-	-	-
4	KEMPER ST.	STA.16+30 TO STA. 20+60	1462	132	-	1462	161	-	1462	496	-	-	-	1462	908	-	190	-	-	-	-	-
	RAMP C-1	STA.10+26 TO STA. 11+02.70	537	49	-	537	60	-	537	183	-	-	-	537	334	-		-	52	5	24	74
	RAMP C-2	STA.12+77.35 TO STA. 14+87.83	188	17	-	188	21	-	188	64	-	-	-	-	117	-		-	110	10	50	145
	RAMP D-1	STA.10+24 TO STA. 17+68.06	906	82	-	906	100	-	906	308	-	-	-	906	563	-		-	-	-	-	-
	RAMP D-2	STA.10+00 TO STA. 13+42.28	729	66	-	729	81	-	729	248	-	-	-	729	454	-		-	-	-	-	-
	RTE. 29 SHLD. LT.	STA.14+66 TO STA. 17+75	-	-	-	-	-	-	-	-	-	-	-	-	-	-		-	138	13	63	180
5	KEMPER ST.	STA.20+60 TO STA. 27+75	1194	108	-	1194	132	-	1194	405	-	-	-	1194	742	-	113	-	-	-	-	-
6	RAMP D-1	-	7	1	-	7	1	-	7	2	-	-	-	7	4	-	-	-	-	-	-	-
	RTE. 29 SHLD. LT.	STA. 11+75 TO STA. 14+64	-	-	-	-	-	-	-	-	-	-	-	-	-	-		-	129	12	59	246
TOTAL		-		752	-		917	-		2819	-	-	-		5159	-	537	-		45	223	742

** THE THEORETICAL TONNAGE SHOWN ON THIS PROJECT IS BASED ON A WEIGHT OF 155 LBS PER CU. FT. THE QUANTITIES ARE INCREASED BY 6% FOR MOISTURE CORRECTION.

PROJECT	SHEET NO.
U000-118-204	2E(3)

SUPERVISED BY CITY OF LYNCHBURG
PROJECT MANAGER STEVE CAMPBELL, MATTERN & CRAIG (540)-345-9342
SURVEYED BY MATTERN & CRAIG (540)-345-9342
DESIGNED BY MIKE AGEE, MATTERN & CRAIG

REVISED	STATE	ROUTE	PROJECT	SHEET NO.
	VA.	29	U000-118-204, C-501	2E(4)

DESIGN FEATURES RELATING TO CONSTRUCTION OR TO REGULATION AND CONTROL OF TRAFFIC MAY BE SUBJECT TO CHANGE AS DEEMED NECESSARY BY THE DEPARTMENT

INCIDENTAL SUMMARY

SHEET NO.	CURB STD. CG-2 ⊗		COMB. CURB AND GUTTER STD. CG-6 ⊗		HYD. CEMENT CONCRETE SIDEWALK 4 IN. ⊗	AGGR. BASE MAT'L TYPE 21B (UNDER SIDEWALK)	SAW CUT ASPHALT PVMT. 6"	DEMOLITION OF PAVEMENT (FLEXIBLE) ⊗	CG-12 DETECTABLE WARNING SURFACE	OBSCURING ROADWAY	MEDIAN BARRIER MB-3	MEDIAN STRIP MS-1A	MEDIAN STRIP(4') MOD. MS-1A	IMPACT ATTENUATOR SERVICE TYPE II TC-2.4(35MPH MAX.	PAVED DITCH MOD. PG-2A TYPE E ⊗	FLEXIBLE PVMT. TIE-IN PLANING (0-2" DEPTH)	GUARDRAIL			DRY RIPRAP CL. A1	GUARDRAIL TERMINAL STD. GR-11	FIXED OBJECT ATTACH. GR-FOA-1		FENCE STD FE-CL	CORNER BRACE UNIT STD FE-CL
																	GR-2		TERMINAL GR-9						
	STD.	RAD.	STD.	RAD.	SY	TON	LF	SY	SY	UNIT	LF	SY	SY	EA	SY	SY	STD. LF	RAD. LF	EA	TON	EA	TYPE I EA	TYPE II EA	LF	EA
3	137	82	438	354	264	65	100	4445	-	27	-	214	94	-	87	55	70	-	1	31	1	-	-	-	-
4	567	521	384	342	165	42	900	5299	4	29	-	148	-	-	214	55	1173	-	3	10	4	2	2	40	-
5	18	-	316	117	121	30	50	1160	-	-	60	239	-	1	-	55	434	-	-	-	-	-	-	-	-
6	51	9	-	-	-	-	300	1434	-	26	-	-	-	-	164	55	348	-	-	-	-	1	-	260	4
-	-	-	-	-	-	-		-	-	-	-	-	-	-	-	-	-	-	-	-	-	-	-	-	-
-	-	-	-	-	-	-		-	-	-	-	-	-	-	-	-	-	-	-	-	-	-	-	-	-
TOTAL	773	612	1138	813	550	137	1350	12,338	4	82	60	601	94	1	465	220	2025	-	4	41	5	3	2	300	4

⊗ DENOTES ITEMS TO BE PAID FOR ON BASIS OF PLAN QUANTITY IN ACCORDANCE WITH CURRENT ROAD AND BRIDGE SPECIFICATIONS.

INCIDENTAL SUMMARY CON'T

	ELECTRONIC ARROW	MOBILIZATION	FIELD OFFICE TYPE I	CLEARING & GRUBBING	CONSTRUCTION SURVEYING	ALLAYING DUST	CONSTRUCTION SIGNS	GROUP 2 CHANNELIZING DEVICE	TYPE III BARRICADE 8'	TRAFFIC BARRIER SERVICE CONC.	TEMPORARY SIGNALIZATION	WARNING LIGHT TYPE B	IMPACT ATTENUATOR SERVICE 35 MPH	CONSTRUCTION PVMT. MARKING TY. D, 4" CL. II	CONSTRUCTION PVMT. MARKING TYPE F 4"	ERADICATION OF EXIST. PVMT. MARKING	ASPHALT CONC. PATCH 6"	WORK ZONE TRAFFIC CONTROL MANAGEMENT	CRUSHER RUN AGGREGATE NO. 25 OR 26
	HOUR	LS	MONTH	LS	LS	HOUR	S.F.	DAY	EA	LF	LS	DAY	EA	LF	LF	LF	EA	LS	TON
	10,522	1	18	1	1	822	728	162,756	9	620	2	162,760	2	8000	8000	4000	40	1	500
TOTAL	10,522	1	18	1	1	822	728	162,756	9	620	2	162,760	2	8000	8000	4000	40	1	500

PROJECT	SHEET NO.
U000-118-204	2E(4)

SUPERVISED BY CITY OF LYNCHBURG
PROJECT MANAGER STEVE CAMPBELL, MATTERN & CRAIG (540)-345-9342
SURVEYED BY MATTERN & CRAIG (540)-345-9342
DESIGNED BY MIKE AGEE, MATTERN & CRAIG

ROADSIDE DEVELOPMENT

REVISED	STATE	STATE ROUTE	STATE PROJECT	SHEET NO.
	VA.	29	U000-118-204, C-501	2E(5)

DESIGN FEATURES RELATING TO CONSTRUCTION OR TO REGULATION AND CONTROL OF TRAFFIC MAY BE SUBJECT TO CHANGE AS DEEMED NECESSARY BY THE DEPARTMENT

CORE MIX

MIX	LBS./ ACRES	DESCRIPTION
1	▲ 100	✱ 100% CERTIFIED FINE FESCUE
2	▲ 100	100% CERTIFIED TALL FESCUE
3	▲ 50 50	50% CERTIFIED TALL FESCUE ✱ 50% CERTIFIED FINE FESCUE
4	▲	50% ORCHARDGRASS 50% CERTIFIED KENTUCKY BLUEGRASS
5	▲	100% BERMUDAGRASS
TEMPORARY		
3/1 - 5/16 and 8/16 - 3/1	50 50	50% CERTIFIED TALL FESCUE 50% BARLEY, WINTER RYE OR WINTER WHEAT
5/16 - 8/16	50 50	50% FOXTAIL MILLET 50% CERTIFIED TALL FESCUE

▲ ALL RATES TO BE SPECIFIED BY THE DISTRICT ROADSIDE MANAGER

✱ FINE FESCUES INCLUDE CHEWINGS, CREEPING RED, HARD, SHEEP

ADDITIVES

TYPE	LBS./ ACRES	DESCRIPTION
A	▲ 5	100% LOVEGRASS
B	▲ 22	100% BARLEY, WINTER RYE OR WINTER WHEAT
C	▲ 10	100% FOXTAIL MILLET
D	▲ 10	100% ANNUAL RYEGRASS
E	▲ 20	100% CROWNVETCH (LEGUME)
F	▲ 5	100% SERICEA LESPEDEZA (LEGUME)
G	▲ 8	100% BIRDSFOOT TREFOIL (LEGUME)
H	▲	
I	▲	
J	▲	
K	▲	

SECTION OF SEED LOCATIONS

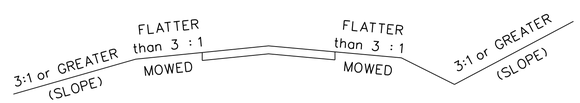

NOTES:

APPROXIMATELY 2 ACRES WILL BE DISTURBED ON THIS PROJECT AND WILL REQUIRE THE ESTABLISHMENT OF GRASSES AND/OR LEGUMES.

✱ NOTES FOR FIELD USE ONLY

OVERSEEDING RATES SHALL BE 100 PERCENT OF THE SEED MIXTURE SUPPLIED WITHOUT FERTILIZER.

THE ENGINEER WILL REQUIRE THE CONTRACTOR TO PERFORM SUPPLEMENTAL SEEDING WHEN LESS THAN 75 PERCENT UNIFORM STAND OF THE PERMANENT GRASS SPECIFIED IN THE MIXTURES IS OBTAINED. (ANNUAL SPECIES SUCH AS, RYE AND MILLET ARE TEMPORARY VARIETIES AND REQUIRE SUPPLEMENTAL SEEDING.)

NOTES APPLY TO SCHEDULE

LEGUME SEED MIXES (BIRDSFOOT TREFOIL, CROWNVETCH, AND SERICEA LESPEDEZA) AND WEEPING LOVEGRASS SHALL NOT BE USED ON SHOULDERS AND OTHER LOCATIONS FLATTER THAN 3:1 SLOPE.

LEGUME SEED SHALL BE INOCULATED WITH THE APPROPRIATE STRAIN AND RATE OF BACTERIA. FOR HYDROSEEDING, USE FIVE TIMES THE DRY SEEDING RATE OF INOCULATE.

A TEMPORARY MIX OR EROSION CONTROL MULCH, AS DIRECTED BY THE ENGINEER, IS TO BE USED ONLY ON AREAS THAT ARE TO BE REGRADED OR LATER DISTURBED, IF LEFT DORMANT FOR MORE THAN 15 DAYS.

EROSION CONTROL MULCH, AS DIRECTED BY THE ENGINEER, IS TO BE USED ON AREAS THAT ARE TO BE LEFT DORMANT FOR MORE THAN 15 DAYS BETWEEN DECEMBER 1 AND FEBRUARY 28.

EROSION CONTROL MULCH, AS LISTED ON THE VDOT APPROVED PRODUCTS LIST, SHALL BE APPLIED IN ACCORDANCE WITH THE MANUFACTURER'S RECOMENDATIONS.

EROSION CONTROL MULCH SHALL PROVIDE 100 PERCENT COVERAGE OF ALL DENUDED AREAS .

SPRING & SUMMER AND FALL & WINTER DEFINED FOR THE PURPOSE OF DETERMINING WHETHER HULLED OR UNHULLED BERMUDAGRASS AND SERICEA LESPEDEZA SEED IS REQUIRED:

SPRING & SUMMER 4/1 - 9/15 - USE HULLED SEED
FALL & WINTER 9/15 - 4/1 - USE UNHULLED SEED

TYPE I MULCH (STRAW) TO BE USED ON NEWLY SEEDED AREAS ADJACENT TO ALL WATERWAYS, WETLANDS, SWAMPS, OR ANY AREA IN WHICH DRAINAGE FLOWS TOWARD AREAS UNDER THE JURISDICTION OF THE ENVIRONMENTAL REGULATORY AGENCIES.

TYPE I MULCH SHALL BE APPLIED TO PROVIDE A MINIMUM 90 PERCENT COVERAGE.

TYPE I MULCH SHALL BE TACKED WITH FIBER MULCH AT THE RATE OF 750 LBS. PER ACRE AND/OR MULCH TACKIFIER.

TYPE II MULCH (FIBER MULCH) MAY BE SUBSTITUTED FOR TYPE I MULCH AT THE RECOMMENDATION OF THE DISTRICT ROADSIDE MANAGER.

TYPE II MULCH SHALL BE APPLIED AT A RATE OF 1500 LBS. (NET DRY WEIGHT) PER ACRE TO PROVIDE A MINIMUM OF 90 PERCENT COVERAGE, AND SHALL BE APPLIED IN A SEPARATE APPLICATION.

ALL TOPSOIL IS TO BE FREE OF HARD LUMPS, CLODS, ROCKS AND FOREIGN DEBRIS AND IS TO BE HAND RAKED TO TIE INTO EXISTING LAWNS.

ALL SEED MUST BE IN CONFORMANCE WITH VDOT SEED SPECIFICATIONS FOR GRASSES & LEGUMES AND BE PROVIDED AT THE PROJECT SITE IN BAGS NOT OPENED AND LABELED FOR USE ON VDOT PROJECTS WITH A GREEN TAG CERTIFYING INSPECTION BY THE VIRGINIA CROP IMPROVEMENT ASSOCIATION.

ROADSIDE DEVELOPMENT SUMMARY

PROJECT NUMBERS	⊗ TOPSOIL 2" CLASS A | B	REGULAR SEED	OVER SEEDING	LIME	① FERT. 15-30-15	LEGUME SEED	LEGUME OVER SEEDING	TEMPORARY SEEDING	SOD
	ACRES	LBS.	LBS.	TONS	TONS	LBS.	LBS.	LBS.	S.Y.
	2.0	338	211	7.6	0.57	53	33	100	233

⊗ DENOTES ITEM(S) TO BE PAID FOR ON BASIS OF PLAN QUANTITIES IN ACCORDANCE WITH CURRENT ROAD AND BRIDGE SPECIFICATIONS.

① A SOIL TEST IS REQUIRED PRIOR TO FINAL SITE STABILIZATION. THE CONTRACTOR SHALL DETERMINE FERTILIZER APPLICATION RATES FOR THE ESTABLISHMENT OF GRASS ON THE SITE BY CONTACTING THE VIRGINIA COOPERATIVE EXTENSION OR A GEOTECHNICAL FIRM (WITH SOIL TESTING FACILITIES) TO OBTAIN A SOILS REPORT FOR NUTRIENT APPLICATION. COST FOR SOIL TEST SHALL BE INCLUDED IN THE PAY ITEM FOR FERTILIZER

SEEDING SCHEDULE

	SLOPES SEED MIX WITH ADDITIVE	MOWED SEED MIX WITH ADDITIVE	SLOPES SEED MIX WITH ADDITIVE	MOWED SEED MIX WITH ADDITIVE	SLOPES SEED MIX WITH ADDITIVE	MOWED SEED MIX WITH ADDITIVE
	SPRING MONTH & DATE 4/1 - 6/1		SUMMER MONTH & DATE 6/1 - 9/15		FALL & WINTER MONTH & DATE 9/15 - 4/1	
PROJECT NUMBERS	3, D	3, D	3, C	3, C	3, B	3, B
✱ SPECIFY KIND OF FINE FESCUE	HARD OR CHEWING	HARD OR CHEWING	HARD OR CHEWING	HARD OR CHEWING	HARD OR CHEWING	HARD OR CHEWING

MIX REQUIREMENTS THIS PROJECT

RECOMMENDATIONS FOR THE APPLICATION OF SEED MIXTURES (CORE MIX AND ADDITIVES), FERTILIZER, LIME, ETC. ARE TO BE OBTAINED FROM THE DISTRICT ROADSIDE MANAGER.

SUPERVISED BY CITY OF LYNCHBURG
PROJECT MANAGER STEVE CAMPBELL, MATTERN & CRAIG (540)-345-9342
SURVEYED BY MATTERN & CRAIG (540)-345-9342
DESIGNED BY MIKE AGEE, MATTERN & CRAIG

GRADING DIAGRAM AND SUMMARY

COMMONWEALTH OF VIRGINIA
MICHAEL S. AGEE
Lic. No. 015232
PROFESSIONAL ENGINEER

MATTERN & CRAIG, INC
Roanoke, Virginia
(ROADWAY ENGINEER)

REVISED	STATE	ROUTE	PROJECT	SHEET NO.
	VA.	29	U000-118-204, C-501	2E(6)

DESIGN FEATURES RELATING TO CONSTRUCTION OR TO REGULATION AND CONTROL OF TRAFFIC MAY BE SUBJECT TO CHANGE AS DEEMED NECESSARY BY THE DEPARTMENT

- ⊢130⊣ Fill — Denotes fill quantity from computer listings and/or manual cross-sections.
- ⊢130⊣ Cut — Denotes cut quantity from computer listings and/or manual cross-sections. Quantity adjusted for demolition of pavement.
- Denotes C.Y. root mat material in cut areas which is included in Regular Excavation quantities.
- Denotes C.Y. root mat material removed from fill sections and backfilled with (specify material) (Backfill with Regular Excavation and/or Borrow Excavation)
- (C) Denotes C.Y. Regular Excavation from private entrances.
- (F) Denotes C.Y. fill for private entrances.
- Denotes C.Y. unsuitable material above subgrade which is included in Regular Excavation.
- Denotes C.Y. of excavation of unsuitable mat'l. below subgrade and backfilled with (specify material)
- Denotes C.Y. Regular Excavation from drainage ditches.
- Denotes C.Y. Minor Structure Excavation.
- Denotes C.Y. existing pavement to be removed as "Demolition of Pavement" from fill sections and backfilled with (specify mat'l.)
- Denotes C.Y. existing pavement to be removed as Demolition of Pavement in cut sections within construction limits and is not included in the Regular Excavation quantities.
- Denotes C.Y. Haul. (Haul Material shown will be C.Y. of mat'l. not compacted.)
- Denotes C.Y. fill for S.W.M. (Stormwater Management Basin)
- Denotes C.Y. cut from S.W.M. (Stormwater Management Basin)
- Denotes Borrow Material (Min. CBR, specify)
- Denotes Surplus Material.
- Denotes C.Y. fill for drainage ditches.

⊗ Denotes items to be paid for on a basis of plan quantities in accordance with current VDOT Road and Bridge Specifications.

(1) Cut quantity shown does not include the material removed as Demolition of Pavement.

(2) Quantity shown for use in Grading Diagram only. See other Summaries for pay item(s).

(3) Included in Total Regular Excavation.

(4) Included in Roadway Cut quantity.

(5) Quantities for Temporary Sediment Basins and Temporary Sediment Traps are included with the Stormwater Management Basin quantities.

(6) Denotes pay item.

(7) Included in total fill quantity.

(8) This quantity comes from the computer listings and/or manual cross-sections and may be adjusted for other quantities.

(9) Volumes obtained for Cut Ditches and Fill Ditches not included in computer listings.

(10) Includes settlement of in-place soil.

NOTE: FOR ESTIMATING PURPOSED ONLY EARTHWORK TO BE PAID FOR ON A LUMP SUM BASIS.

Location	Roadway Cut (1) (8)	Root Mat in Cut Sections	Root Mat in Fill Sections	Cut - Ditches (9)	Fill - Ditches (9)	Unsuitable Material: Below Subgrade	Unsuitable Material: Above Subgrade	Roadway Fill (10) (8)	Entrances: Cut	Entrances: Fill	Total Regular Excavation	Total Fill	Demolition of Pavement (2)	Minor Structure Excavation (2)	Stormwater Management Basins (5) (2): Cut	Stormwater Management Basins (5) (2): Fill	Surplus ~~Borrow~~ (Embankment)
	C.Y.	C.Y.	C.Y.	C.Y.	C.Y.	C.Y.	C.Y.	C.Y.	C.Y.	C.Y.	C.Y.	C.Y.	C.Y.	C.Y.	C.Y.	C.Y.	C.Y.
Kemper St	286							906			286	906	1647				
Ramp B-1	37							98			37	98	252				
Ramp B-2	99							102			99	102	116				
Ramp C-1	24							67			24	67	65				
Ramp C-2	215							61			215	61	176				
Ramp D-1	125							15			125	15	175				
Ramp D-2	412							402			412	402	286				
Rte. 29	546							17			546	17	0				
FORMULAS	C	D	E	F	G	H	I	J	K	L	M	N	O	P	Q	R	S
TOTALS	(3) 1744	(4)	(3) (7)	(3)	(7)	(3) (7)	(4)	(7) 1668	(3)	(7)	1744	1668	2717			(7)	76

~~The borrow quantity shown was computed on the basis of the average shrinkage or swell factor for the general vicinity of the project. The contractor will be responsible for determining the actual factor for the site(s) from which he proposes to secure borrow material needed to complete this project.~~

~~The embankment quantity shown has not been adjusted for shrinkage or swell factors. The contractor will be responsible for determining the effect of the shrinkage or swell factor of the embankment material, and no adjustment will be made in pay quantities for this factor. The contractor shall determine the actual quantity of embankment material needed to complete this project.~~

FORMULAS

Roadway Cut (C) = Unadjusted Cut from Computer Listings or Manual Cross-Sections minus (-) Demolition of Pavement.

Roadway Fill (J) = Fill Required plus (+) Material for Backfill of Demolition of Pavement Areas in Fill (for heights of fill < 3 feet below subgrade)

Total Reg. Excav. (M) = C + E + F + H + K

Total Fill (N) = J + E + G + H + L + R

~~Borrow~~ (S) = [N - ([C + F + K + P + Q - D - I] ~~x Compaction Factor)] ÷ Compaction Factor for Borrow Site~~

(Embankment) (S) = N - (C + F + K + P + Q - D - I) (Embankment = Total Fill - Usable Cut) Estimated Material to be obtained off-site.

PROJECT	SHEET NO.
U000-118-204	2E(6)

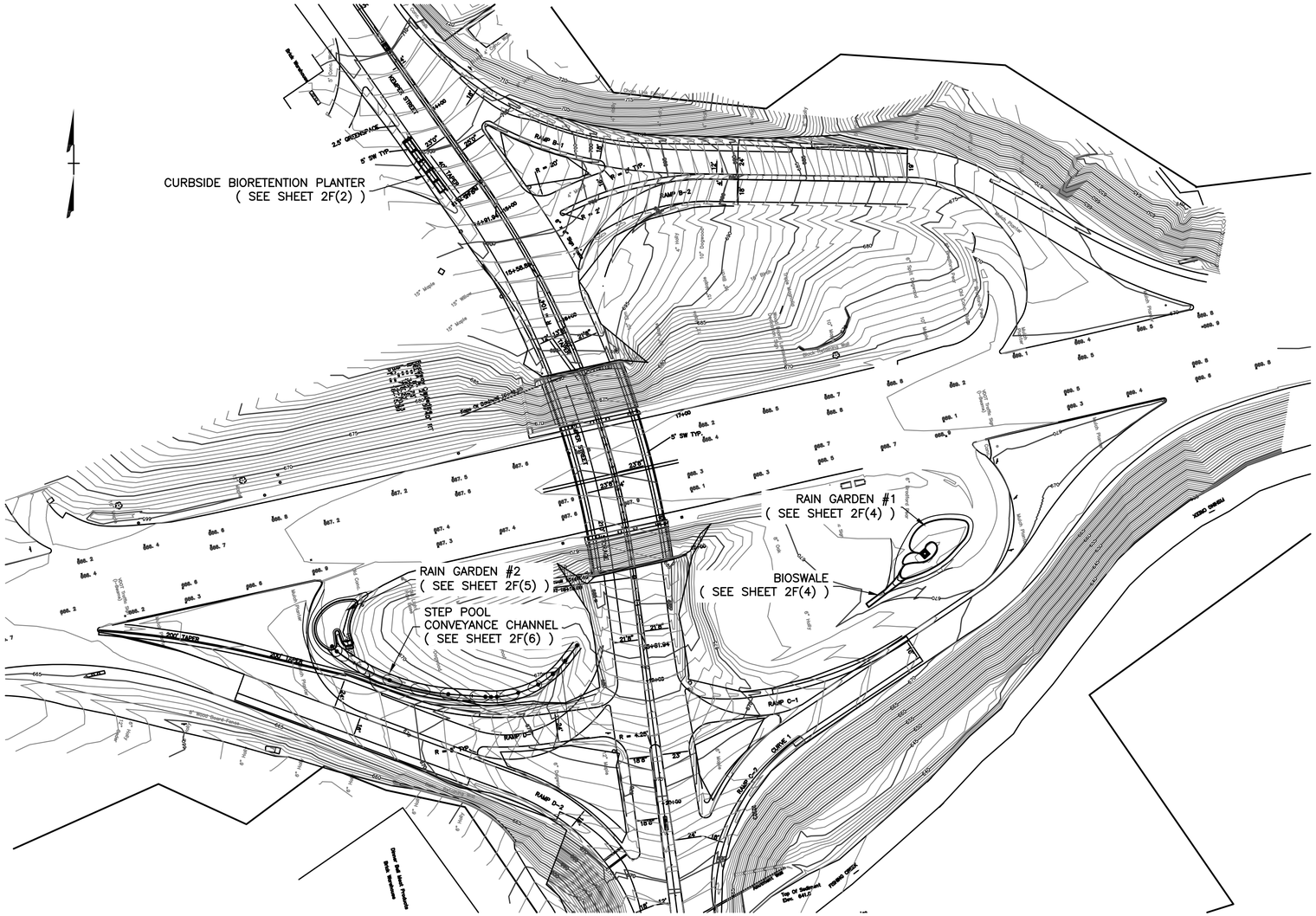

OVERALL PLAN – LOW–IMPACT STORMWATER FEATURES

SCALE: 1"=50'

GRAPHIC SCALE

50 0 25 50 100 200

(IN FEET)
1 inch = 50 ft.

GENERAL NOTES & SPECIFICATIONS:

1. THIS PROJECT INCLUDES LOW–IMPACT DESIGN (LID) STORMWATER MEASURES (AS SHOWN) THAT RELY UPON INFILTRATION AS A CRITICAL COMPONENT. THESE MEASURES ARE EXTREMELY SENSITIVE TO COMPACTION AND CONTAMINATION FROM SOILS RUNOFF AND TRACKING DURING CONSTRUCTION. CONTRACTOR SHALL TRAIN AND INFORM ALL CONSTRUCTION PERSONNEL TO ENSURE AWARENESS OF THESE CONCERNS, AND TAKE NECESSARY MEASURES TO PROTECT THESE MEASURES. SPECIFIC ACTIONS MAY INCLUDE:
   - SEALING/PROTECTING INLETS FROM ALL RUNOFF
   - CONSTRUCT LID PRACTICES ONLY AFTER ALL UP–GRADIENT CONSTRUCTION AREAS ARE FULLY STABILIZED
   - MINIMIZING DURATION OF OPEN EXCAVATIONS
   - DO NOT STOCKPILE OR HANDLE SOILS UPSTREAM OF PRACTICES
   - WORK FROM UPSTREAM AREAS TOWARD DOWNSTREAM AREAS
   - COVER WORK AREAS WITH PLASTIC, TARPS OR GEOTEXTILES
2. PROTECT ALL TREES TO BE PRESERVED WITHIN CONSTRUCTION ZONES WITH APPROPRIATE MEASURES.
3. ALL EXCAVATED AREAS TO RECEIVE LID MEASURES SHALL BE INSPECTED AND TESTED FOR INFILTRATION (IF REQUIRED) BY OWNER'S REPRESENTATIVE PRIOR TO PLACEMENT OF DRAINAGE STONE.
4. EXCAVATION FOR BIORETENTION PRACTICES SHALL BE PERFORMED IN A MANNER THAT DOES NOT COMPACT, SMEAR, OR SMOOTH THE SUBGRADE SOILS. SURFACE SHOULD BE ROUGH AND LOOSE PRIOR TO PLACEMENT OF STONE OR STRUCTURAL SOIL.
5. UNDERDRAIN CONNECTIONS TO EXISTING STORM SEWER SYSTEM SHALL BE MADE IN ACCORDANCE WITH CITY OF LYNCHBURG UTILITY STANDARDS.
6. MATERIALS AND CONSTRUCTION METHODS RELATED TO THE RAIN GARDENS AND BIORETENTION PLANTER SHOWN HEREIN SHALL COMPLY WITH DESIGN SPECIFICATION #9 – BIORETENTION, VERSION 1.9, BY THE VIRGINIA DEPARTMENT OF CONSERVATION & RECREATION.
7. GENERAL FILTER MEDIA COMPOSITION – THE RECOMMENDED BIORETENTION SOIL MIXTURE IS GENERALLY CLASSIFIED AS A LOAMY SAND ON THE USDA TEXTURE TRIANGLE, WITH THE FOLLOWING COMPOSITION:

   85% to 88% SAND;
   8% to 12% SOIL FINES, AND;
   3% to 5% ORGANIC MATTER.

   ORGANIC MATTER SHALL BE PROVIDED BY COMPOST MEETING THE REQUIREMENTS OF THE U.S. COMPOSTING COUNCIL (USCC).
8. INFILTRATION RATE – THE BIORETENTION SOIL MEDIA SHALL HAVE A MINIMUM INFILTRATION RATE OF 1 TO 2 INCHES PER HOUR, MEASURED AFTER MEDIA HAS SETTLED AND FULLY STABILIZED.
9. MULCH – MULCH LAYER SHALL CONSIST OF 2" TO 3" DEPTH OF SHREDDED, AGED HARDWOOD MULCH. CONTRACTOR SHALL REMOVE AND REPLACE ANY MULCH THAT FLOATS DURING OR AFTER THE FIRST THREE INUNDATIONS OF THE BIORETENTION SYSTEMS.
10. UNDERDRAIN PIPING – UNDERDRAIN PIPING SHALL BE INSTALLED AT THE DEPTHS AND LOCATIONS INDICATED. PIPE AND FITTINGS SHALL CONSIST OF 4–INCH DIAMETER SCHEDULE 40 PVC. PIPING SHALL HAVE ½" DIAMETER PERFORATIONS SPACED EVERY 24" ALONG THE LENGTH OF THE PIPE. PIPE SHALL BE INSTALLED WITH THE PERFORATIONS FACING DOWNWARD. CLEANOUTS SHALL CONSIST OF 4–INCH DIAMETER SCHEDULE 40 PVC THREADED PLUGS, INSTALLED FLUSH WITH THE TOP OF MULCH ELEVATION.
11. STONE LAYER – STONE STORAGE LAYERS SHALL CONSIST OF THE STANDARD VDOT GRADATIONS INDICATED. ALL STONE SHALL BE DOUBLE WASHED AND FIELD VERIFIED TO BE FREE OF DUST AND FINE PARTICLES TO PREVENT CLOGGING OF THE SUBGRADE LAYER.

HDLA
HARVEY DESIGN
LAND ARCHITECTS
901 Jefferson St., Ste 208 Lynchburg, VA 24504
Tel: 434-528-5184 www.HDLA.biz

CES
CIVIL & ENVIRONMENTAL SERVICES
Sustainable Site Design
191 Satinwood Lane, Nellysford, VA 22958
Tel: 434-361-1443 www.sustainable-sites.com

COMMONWEALTH OF VIRGINIA
CHRISTOPHER E. SONNE
Lic. No. 020621
9/12/2013
PROFESSIONAL ENGINEER

KEMPER STREET BRIDGE
KEMPER STREET OVER LYNCHBURG EXPRESSWAY (RT.29)
LYNCHBURG, VIRGINIA

MRK	DATE	DESCRIPTION

COMM NO:
DATE: 09–12–2013
DRAWN: CES DESIGN: CES
CHECK: HDLA
CAD FILE:
SHEET SCALE: AS SHOWN
SHEET TITLE
OVERALL SITE PLAN
SHT. NO. 2F(1)

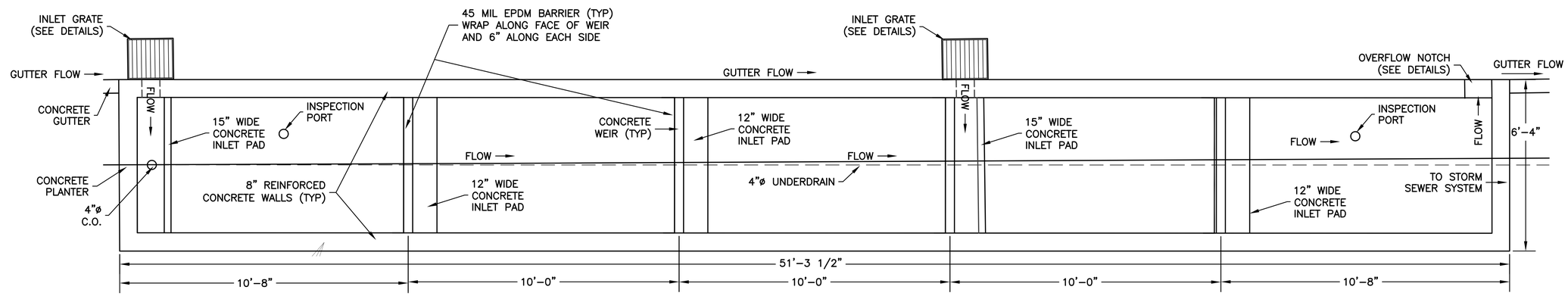

BIORETENTION PLANTER – PLAN VIEW

SCALE: 1/2"=1'

GRAPHIC SCALE

(IN FEET)
1 inch = 2 ft.

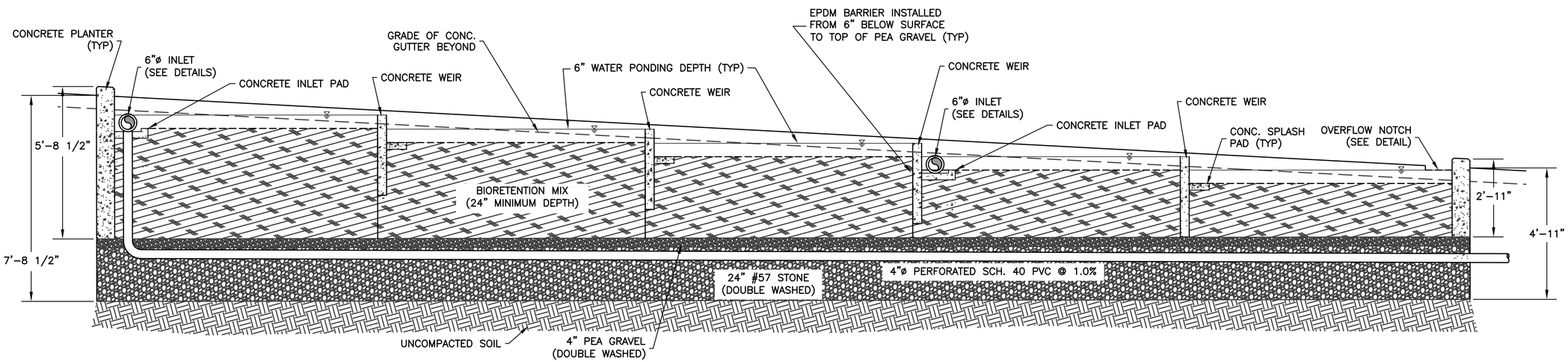

BIORETENTION PLANTER – SECTION VIEW

SCALE: 1/2"=1'

BIORETENTION PLANTER NOTES:

1. INLET STRUCTURE SHALL CONSIST OF DUCTILE IRON COMBINATION INLET FRAME, GRATE & CURB BOX, WITH 8"ø REAR OUTLET. DRAINAGE GRATE TYPE SHALL BE TYPE "V" (VANE GRATE). INLET AND GRATE SHALL BE MODEL R-3165, AS MANUFACTURED BY NEENAH FOUNDRY, OR APPROVED EQUAL.
2. UPON INSTALLATION, DRAINAGE INLETS SHALL BE COVERED AND SEALED WITH PLASTIC TO PREVENT CONTAMINATION OF SUBSOILS. REMOVE PLASTIC WHEN PLACING BIORETENTION PLANTER IN SERVICE.
3. PLANTER STRUCTURE SHALL CONSIST OF 5,000 PSI PRECAST CONCRETE OF THE DIMENSIONS SHOWN. UNLESS OTHERWISE INDICATED, ALL PLANTER WALLS SHALL BE 8" THICK. PROVIDE 3/4" CHAMFER ON ALL EXPOSED CORNERS OF PLANTERS. SLOPE TOP OF PLANTER WALLS 1/4" – 1/8" TO PREVENT PONDING. GROUT SMOOTH ALL EXPOSED JOINTS. ALL EXPOSED PORTIONS OF THE CONCRETE PLANTERS SHALL RECEIVE A RUBBED FINISH.
4. PRECAST SUPPLIER SHALL DESIGN PLANTER STRUCTURES IN ACCORDANCE WITH THE PROJECT SPECIFICATIONS. MINIMUM DESIGN LOADINGS SHALL INCLUDE A FLOWABLE FILL/BACKFILL DENSITY OF 120 LB/CF; PLANTING MIX DENSITY OF 90 LB/CF; AND H-20 TRAFFIC LOADING SURCHARGE ON THE STREET SIDE OF THE PLANTERS. INTERMEDIATE SUPPORTS, INTEGRAL BEAMS, OR OTHER APPROVED METHODS SHALL BE INCORPORATED INTO THE DESIGN TO MEET THESE REQUIREMENTS. STRUCTURAL DESIGN CALCULATIONS SHALL BE PROVIDED FOR REVIEW AS PART OF THE SHOP DRAWING SUBMITTAL.
5. CLEANOUT PLUGS SHALL BE THREADED BRASS, SET FLUSH WITH SPLASH BLOCK SURFACE.
6. PROVIDE MINIMUM PLANTER SOIL MIX DEPTH OF 24" IN ALL SECTIONS.
7. REFER TO SHEET 2F(3) FOR BIORETENTION PLANTER DETAILS.
8. CONCRETE WEIRS SHALL BE 36" TALL, WITH 6" EXPOSED ON UPPER SIDE (TYP).
9. EPDM BARRIER SHALL CONSIST OF 45 MIL POND LINER.
10. REFER TO SHEET 2F(1) FOR BIORETENTION SPECIFICATIONS.
11. PLANTER SHALL MATCH/MEET EXISTING CG-6 CURBING AT EACH END.

HDLA
HARVEY DESIGN LAND ARCHITECTS
901 Jefferson St., Ste 208 Lynchburg, VA 24504
Tel: 434-528-5184 www.HDLA.biz

CES
CIVIL & ENVIRONMENTAL SERVICES
Sustainable Site Design
191 Satinwood Lane, Nellysford, VA 22958
Tel: 434-361-1443 www.sustainable-sites.com

COMMONWEALTH OF VIRGINIA
CHRISTOPHER E. SONNE
Lic. No. 020621
9/12/2013
PROFESSIONAL ENGINEER

KEMPER STREET BRIDGE
KEMPER STREET OVER
LYNCHBURG EXPRESSWAY (RT.29)
LYNCHBURG, VIRGINIA

MRK	DATE	DESCRIPTION

COMM NO:
DATE: 09-12-2013
DRAWN: CES DESIGN: CES
CHECK: HDLA
CAD FILE:
SHEET SCALE: AS SHOWN
SHEET TITLE
BIORETENTION PLANTER
SHT. NO. 2F(2)

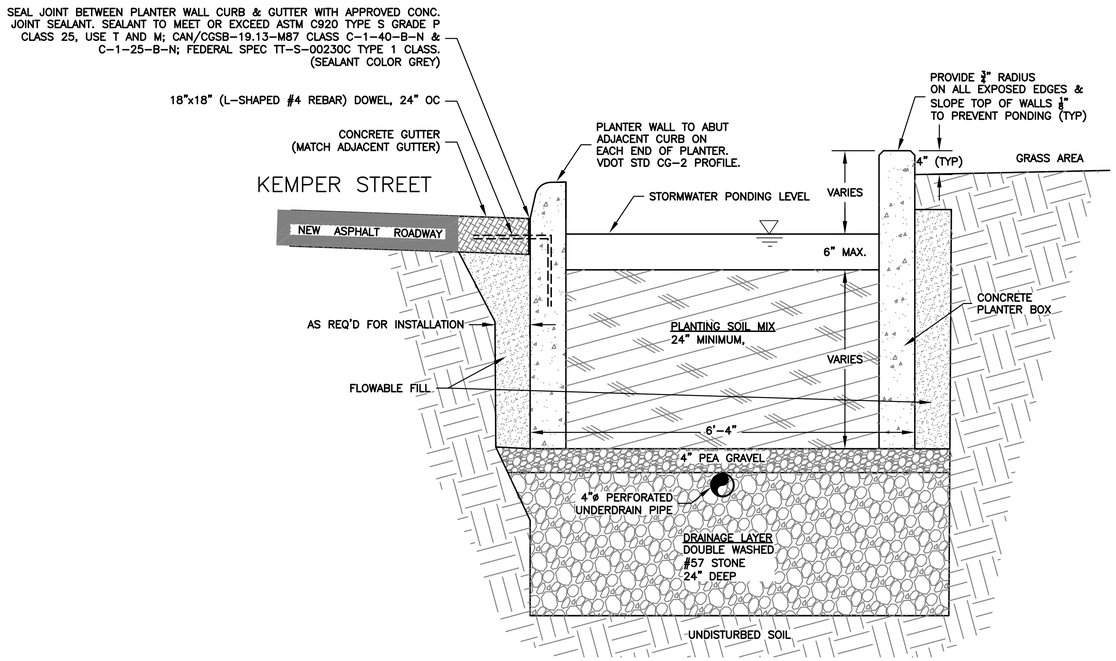

CROSS SECTION KEMPER ST. PLANTER

SCALE: 1"=1'

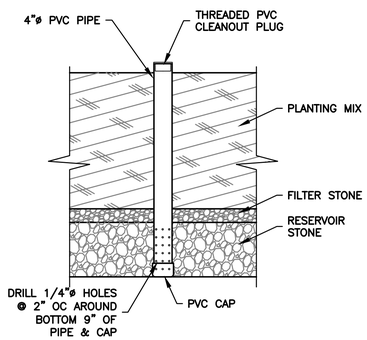

INSPECTION PORT DETAIL

SCALE: NONE

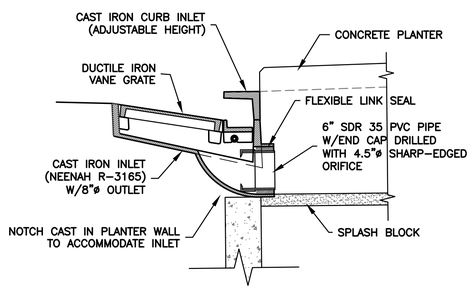

GRATE INLET DETAIL – KEMPER ST. PLANTER

SCALE: 1"=1'

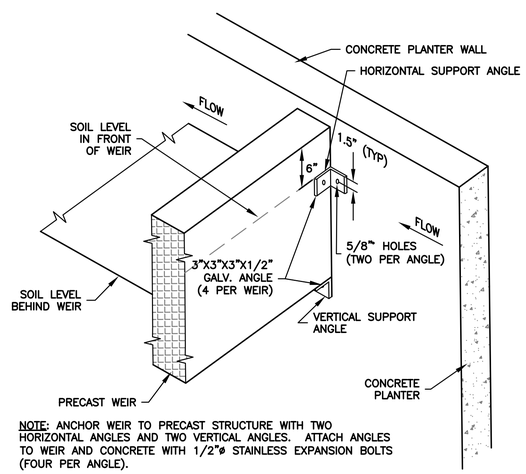

NOTE: ANCHOR WEIR TO PRECAST STRUCTURE WITH TWO HORIZONTAL ANGLES AND TWO VERTICAL ANGLES. ATTACH ANGLES TO WEIR AND CONCRETE WITH 1/2"ø STAINLESS EXPANSION BOLTS (FOUR PER ANGLE).

WEIR MOUNTING DETAIL – KEMPER ST. PLANTER

SCALE: NONE

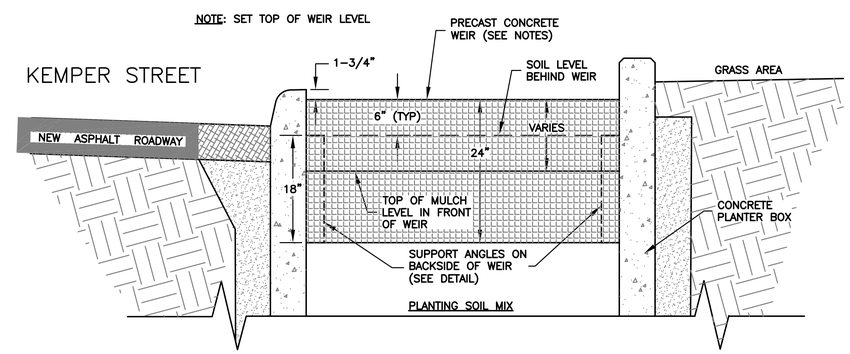

CROSS SECTION AT WEIR – KEMPER ST. PLANTER

SCALE: 1"=1'

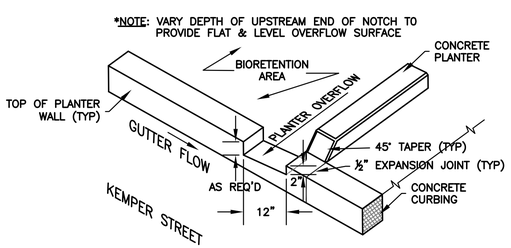

OVERFLOW NOTCH DETAIL – KEMPER ST. PLANTER

SCALE: NONE

HDLA
HARVEY DESIGN LAND ARCHITECTS
901 Jefferson St., Ste 208 Lynchburg, VA 24504
Tel: 434-528-5184 www.HDLA.biz

CES CIVIL & ENVIRONMENTAL SERVICES
Sustainable Site Design
191 Satinwood Lane, Nellysford, VA 22958
Tel: 434-361-1443 www.sustainable-sites.com

COMMONWEALTH OF VIRGINIA
CHRISTOPHER E. SONNE
Lic. No. 020621
9/12/2013
PROFESSIONAL ENGINEER

KEMPER STREET BRIDGE
KEMPER STREET OVER LYNCHBURG EXPRESSWAY (RT.29)

LYNCHBURG, VIRGINIA

MRK	DATE	DESCRIPTION

COMM NO:
DATE: 09-12-2013
DRAWN: CES DESIGN: CES
CHECK: HDLA
CAD FILE:
SHEET SCALE: AS SHOWN
SHEET TITLE
PLANTER DETAILS
SHT. NO. 2F(3)

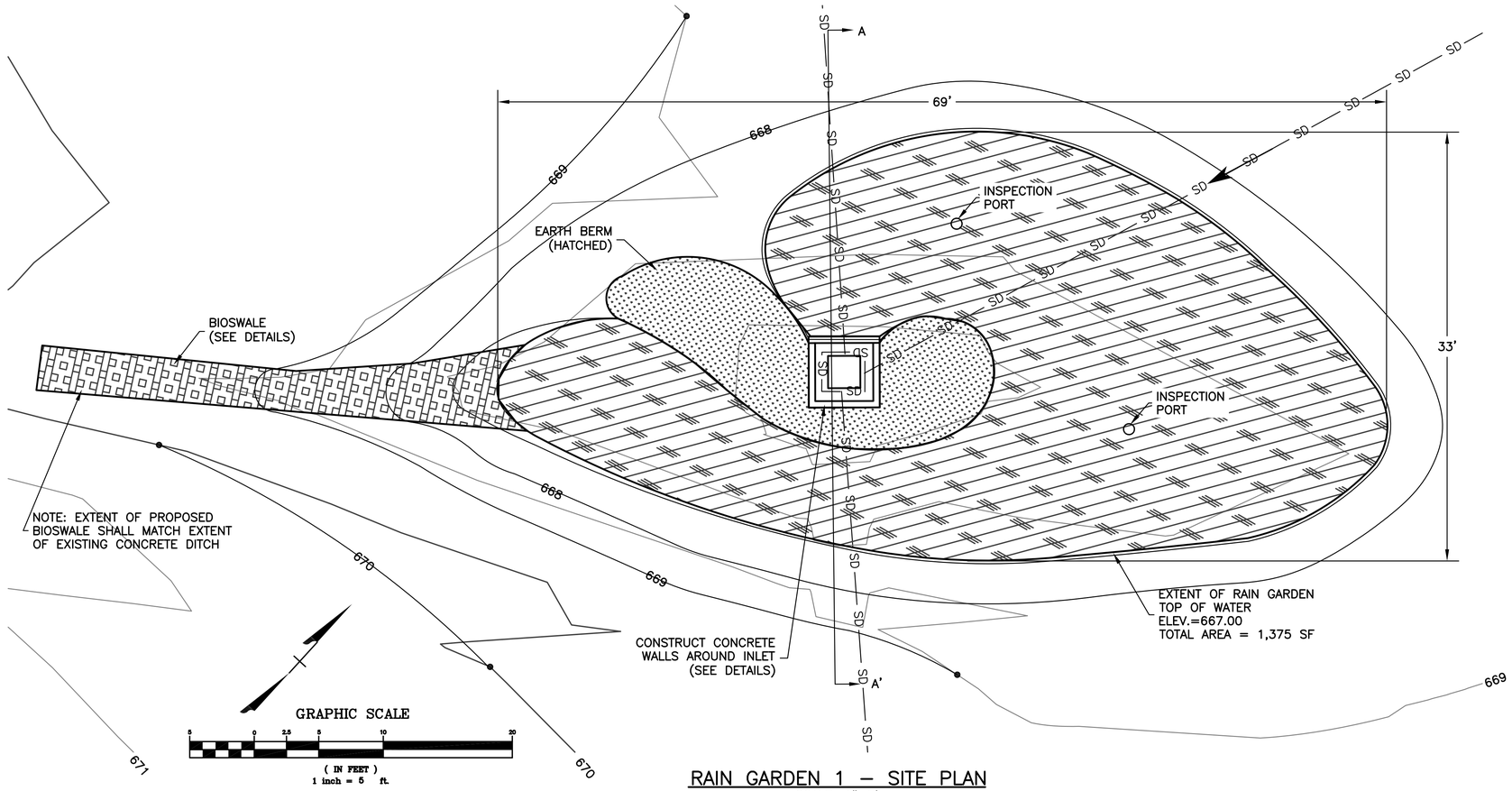

REFER TO SHEET 2F(1) FOR BIORETENTION SPECIFICATIONS.

RAIN GARDEN 1 – SITE PLAN

SCALE: 1"=5'

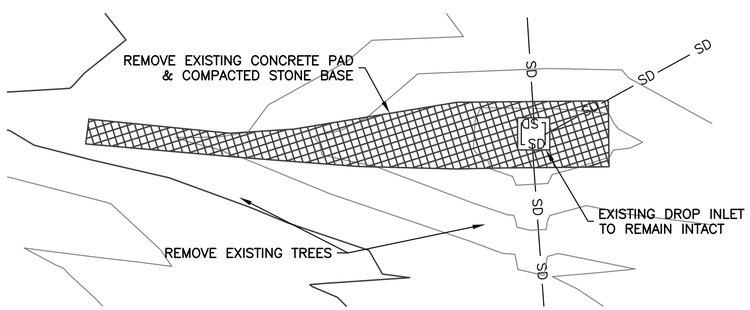

RAIN GARDEN 1 – DEMOLITION PLAN

SCALE: 1"=10'

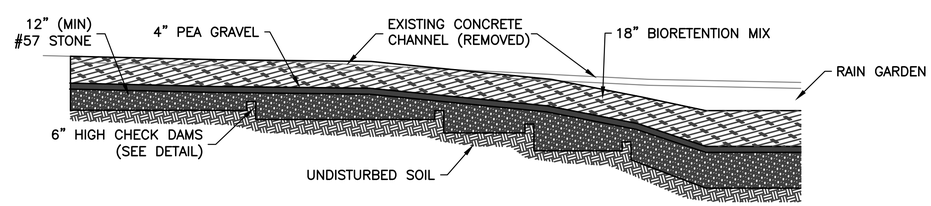

BIOSWALE CENTERLINE SECTION

SCALE: 1"=4'

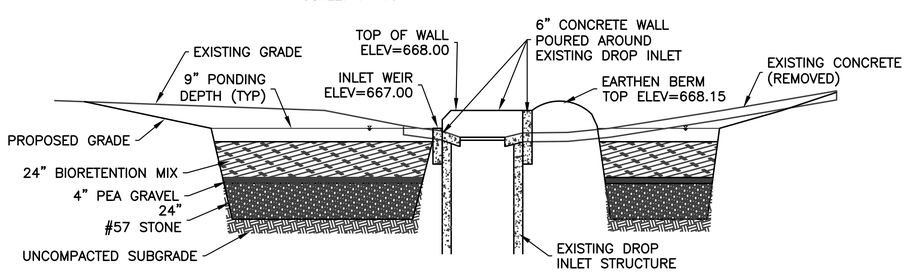

RAIN GARDEN 1 – SECTION A–A'

SCALE: 1"=4'

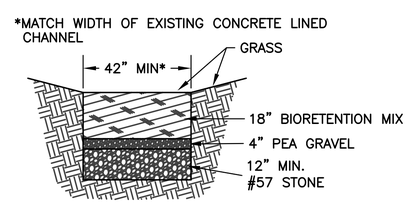

BIOSWALE CROSS–SECTION

SCALE: NONE

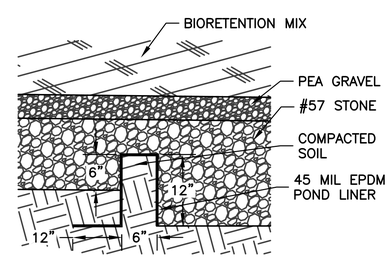

CHECK DAM DETAIL

SCALE: NONE

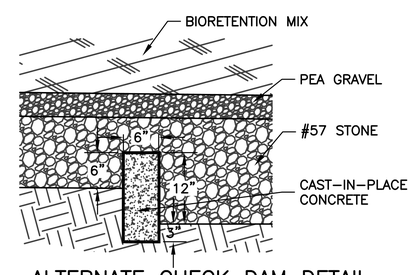

ALTERNATE CHECK DAM DETAIL

SCALE: NONE

HDLA
HARVEY DESIGN
LAND ARCHITECTS
901 Jefferson St., Ste 208 Lynchburg, VA 24504
Tel: 434-528-5184 www.HDLA.biz

CES
CIVIL & ENVIRONMENTAL SERVICES
Sustainable Site Design
191 Satinwood Lane, Nellysford, VA 22958
Tel: 434-361-1443 www.sustainable-sites.com

COMMONWEALTH OF VIRGINIA
CHRISTOPHER E. SONNE
Lic. No. 020621
9/12/2013
PROFESSIONAL ENGINEER

KEMPER STREET BRIDGE
KEMPER STREET OVER LYNCHBURG EXPRESSWAY (RT.29)

LYNCHBURG, VIRGINIA

MRK	DATE	DESCRIPTION

COMM NO:
DATE: 09–12–2013
DRAWN: CES DESIGN: CES
CHECK: HDLA
CAD FILE:
SHEET SCALE: AS SHOWN
SHEET TITLE

RAIN GARDEN NO. 1

SHT. NO. 2F(4)

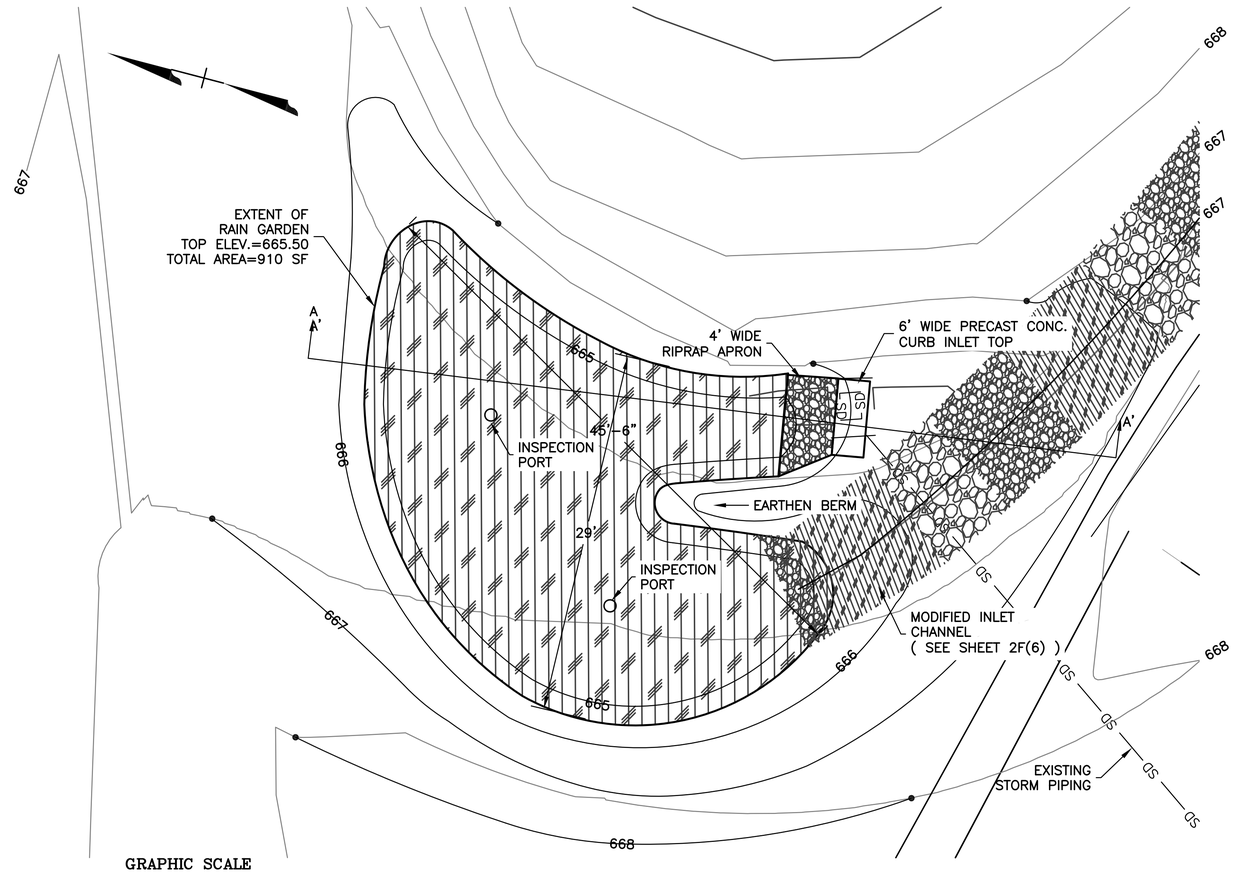

GRAPHIC SCALE

(IN FEET)
1 inch = 5 ft.

RAIN GARDEN 2 – SITE PLAN

SCALE: 1"=5'

REFER TO SHEET 2F(1) FOR BIORETENTION SPECIFICATIONS.

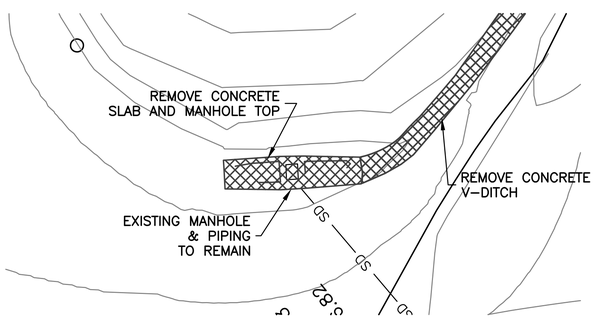

RAIN GARDEN 2 – DEMOLITION PLAN

SCALE: 1"=10'

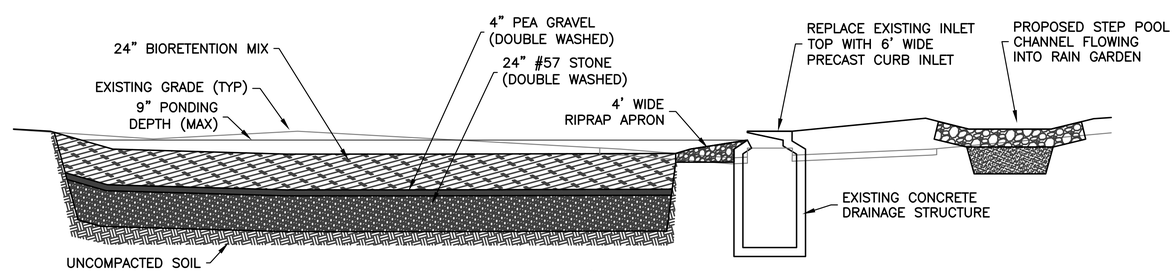

RAIN GARDEN 2 – SECTION A–A'

SCALE: 1"=4'

HDLA
HARVEY DESIGN
LAND ARCHITECTS
901 Jefferson St., Ste 208 Lynchburg, VA 24504
Tel: 434-528-5184 www.HDLA.biz

CES
CIVIL & ENVIRONMENTAL SERVICES
Sustainable Site Design
191 Satinwood Lane, Nellysford, VA 22958
Tel: 434-361-1443 www.sustainable-sites.com

COMMONWEALTH OF VIRGINIA
CHRISTOPHER E. SONNE
Lic. No. 020621
9/12/2013
PROFESSIONAL ENGINEER

KEMPER STREET BRIDGE
KEMPER STREET OVER
LYNCHBURG EXPRESSWAY (RT.29)

LYNCHBURG, VIRGINIA

MRK	DATE	DESCRIPTION

COMM NO:
DATE: 09–12–2013
DRAWN: CES DESIGN: CES
CHECK: HDLA
CAD FILE:
SHEET SCALE: AS SHOWN
SHEET TITLE

RAIN GARDEN
NO. 2

SHT. NO.
2F(5)

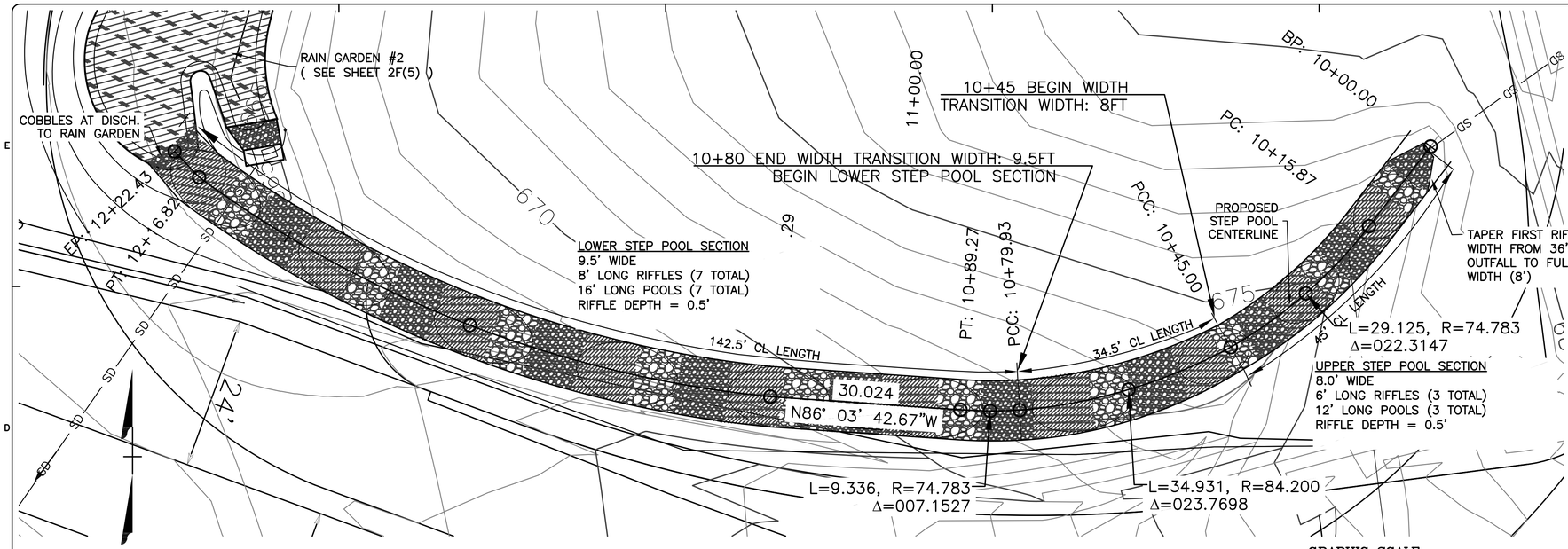

STEP POOL CONVEYANCE – PLAN VIEW

SCALE: 1"=10'

GRAPHIC SCALE

(IN FEET)
1 inch = 10 ft.

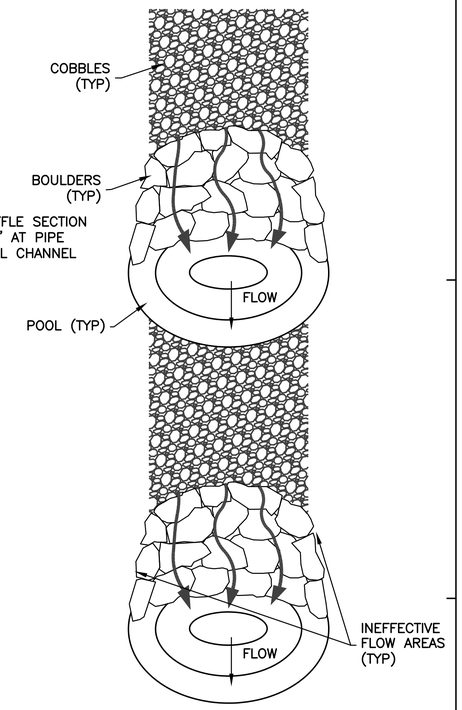

RIFFLE POOL SEQUENCE (TYPICAL)

SCALE: NONE

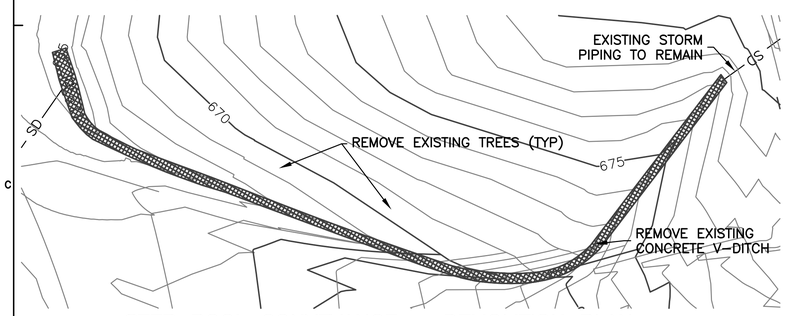

STEP POOL CONVEYANCE – DEMOLITION PLAN

SCALE: 1"=20'

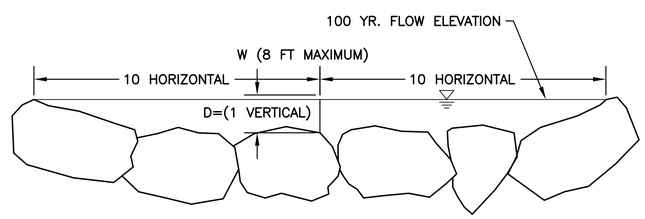

RIFFLE SECTION THROUGH BOULDERS

SCALE: NONE

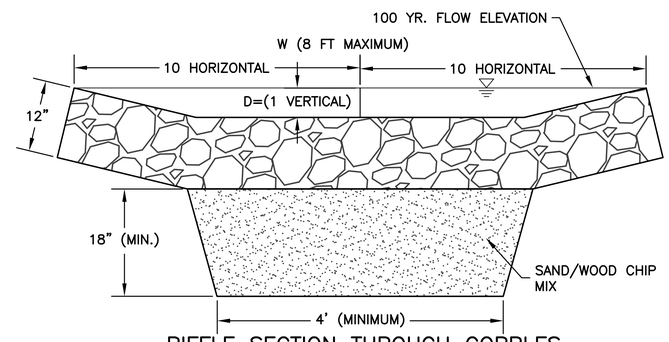

RIFFLE SECTION THROUGH COBBLES

SCALE: NONE

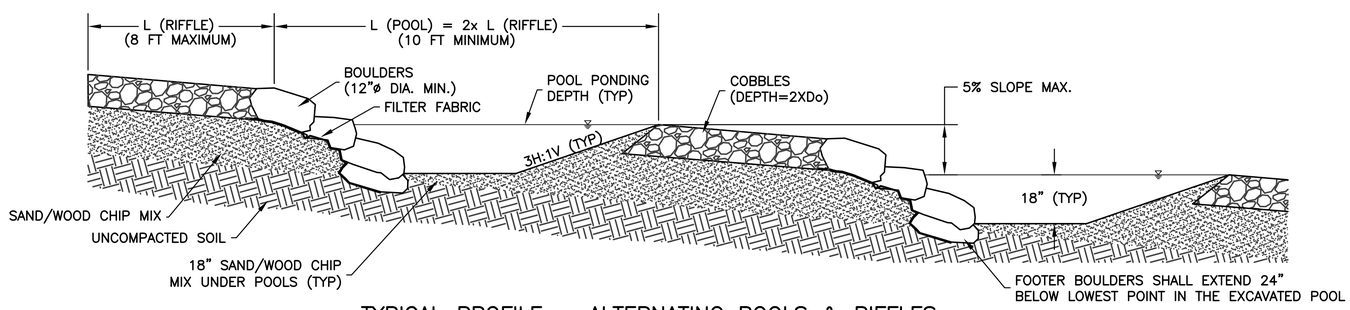

TYPICAL PROFILE – ALTERNATING POOLS & RIFFLES

SCALE: NONE

STEP POOL CONVEYANCE CHANNEL NOTES:

1. POOLS SHALL BE CONSTRUCTED WITH MINIMUM SIDE SLOPE OF 3H:1V. MINIMUM DEPTH RATIO FOR RIFFLES IS 10H:1V.
2. SAND/WOOD CHIP FILTER MEDIUM SHALL MEET THE AASHTO–M–6 OR ASTM–C–33, 0.02 INCHES TO 0.04 INCHES IN SIZE. SAND SUBSTITUTIONS SUCH AS DIABASE AND GRAYSTONE (AASHTO #10) ARE NOT ACCEPTABLE. NO CALCIUM CARBONATE OR DOLOMTIC SAND SUBSTITUTIONS ARE ACCEPTABLE. NO "ROCK DUST" CAN BE USED FOR SAND. WOOD CHIPS ARE TO BE ADDED TO THE SAND MIX AT 20% BY VOLUME TO INCREASE ORGANIC CONTENT AND PROMOTE PLANT GROWTH AND SUSTAINABILITY.
3. MINIMUM DEPTH OF SAND/WOOD CHIP FILTER MEDIUM BELOW BOTTOM OF POOLS SHALL BE 18".
4. FILTER FABRIC SHALL BE PLACED UNDER ALL BOULDERS, AS INDICATED. TO PREVENT UNDERCUTTING, A CONTINUOUS SHEET OF FILTER FABRIC SHALL BE USED ALONG THE CROSS–SECTION. FILTER FABRIC SHALL NOT BE PLACED UNDER RIFFLES OR POOLS.
5. BOULDERS SERVE AS THE WEIR COMPONENT OF THE RIFFLE GRADE CONTROL STRUCTURES. BOULDERS SHOULD BE ARRANGED IN A CURVED MANNER AS SHOWN. THIS ARRANGEMENT IS INTENDED TO ENCOURAGE FLOW DEFLECTION TO THE CENTER OF THE POOLS AND THE CREATION OF INEFFECTIVE FLOW AREAS NEAR THE CHANNEL BANKS. TO ACHIEVE THIS, THE BOULDERS SHALL BE ARRANGED HORIZONTALLY IN THE CENTER OF THE CHANNEL AND THE ARMS ON EITHER SIDE OF THE CHANNEL SHALL BE EXTENDED PARABOLICALLY (APPROXIMATELY 20° ANGLE LONGITUDINALLY TO THE CENTER OF THE POOLS). THE BOULDERS SHOULD BE TABULAR IN SHAPE TO ENCOURAGE INTERLOCKING.
6. FOOTER BOULDERS SHALL BE ANCHORED AT LEAST 24 INCHES BELOW THE LOWEST EXCAVATED ELEVATION IN THE POOLS.
7. BOULDERS SHALL BE EITHER SANDSTONE OR GRANITE. COBBLES SHALL BE QUARTZ OR GRANITE. LIMESTONE SHALL NOT BE USED.

HDLA
HARVEY DESIGN LAND ARCHITECTS
901 Jefferson St., Ste 208 Lynchburg, VA 24504
Tel: 434-528-5184 www.HDLA.biz

CES
CIVIL & ENVIRONMENTAL SERVICES
Sustainable Site Design
191 Satinwood Lane, Nellysford, VA 22958
Tel: 434-361-1443 www.sustainable-sites.com

COMMONWEALTH OF VIRGINIA
CHRISTOPHER E. SONNE
Lic. No. 020621
9/12/2013
PROFESSIONAL ENGINEER

KEMPER STREET BRIDGE

KEMPER STREET OVER
LYNCHBURG EXPRESSWAY (RT.29)

LYNCHBURG, VIRGINIA

MRK	DATE	DESCRIPTION

COMM NO:
DATE: 09–12–2013
DRAWN: CES DESIGN: CES
CHECK: HDLA
CAD FILE:
SHEET SCALE: AS SHOWN
SHEET TITLE
STEP POOL CONVEYANCE

SHT. NO. 2F(6)

EXISTING TREE DESIGNATION KEY

	EXISTING TREE TO REMAIN.
	EXISTING TREE TO BE REMOVED. INCLUDING ROOT REMOVAL.
	EXISTING TREE TO BE REMOVED. REMOVE TREE DOWN TO GRADE ONLY.

EXISTING TREE TO BE REMOVED. GRIND TREE TO GRADE. (TYP)

SAFETY NETTING FOR PROTECTING EXISTING TREES DURING CONSTRUCTION.

EXISTING TREES TO REMAIN TO BE PROTECTED AT DRIPLINE. (TYP)

QUADRANT 'A'

QUADRANT 'B'

QUADRANT 'C'

QUADRANT 'D'

EXISTING TREE TO BE REMOVED, INCLUDING ROOT BALL REMOVAL. (TYP)

SAFETY NETTING FOR PROTECTING EXISTING TREES DURING CONSTRUCTION.

ARTURO FERNANDEZ LOPEZ
INST. No. 080002700
PARCEL ID. 02640009

CITY OF LYNCHBURG
INST. No. 090005291
PARCEL ID. 02702005

SIMON J. REED
D.B. 1089, PG. 1
PARCEL ID. 02640012

EVA B. MASON
D.B. 437, PG. 678
PARCEL ID. 02640006

GREGORY P. SCHULER
INST. No. 040000587
PARCEL ID. 02640007

LELIA H. PROCTOR
D.B. 625, PG. 269
PARCEL ID. 02639001

DINNER BELL MEAT PRODUCTS, INC.
INST. No. 090000721
PARCEL ID. 05001002

KEMPER STREET

17TH STREET

BUCHANAN ST.

BLAKE

LYNCHBURG EXPRESSWAY (RT. 29)

RAMP B-1

RAMP B-2

RAMP C-1

RAMP C-2

RAMP D-1

RAMP D-2

NORTH

0 20' 40'
SCALE:1:20

HDLA
HARVEY DESIGN
LAND ARCHITECTS
901 Jefferson St., Ste 208 Lynchburg, VA 24504
Tel: 434-528-5184
www.HDLA.biz

COMMONWEALTH OF VIRGINIA
PROCTOR S. HARVEY
Cert. No. 080
09-12-13
LANDSCAPE ARCHITECT

KEMPER STREET BRIDGE
KEMPER STREET OVER LYNCHBURG EXPRESSWAY (RT.29)

LYNCHBURG, VIRGINIA

MRK	DATE	DESCRIPTION

COMM NO:
DATE: 09-12-2013
DRAWN: NH/CA DESIGN: PH/CA
CHECK: PH
CAD FILE:
SHEET SCALE: AS SHOWN
SHEET TITLE

TREE DEMO AND PROTECTION

SHT. NO. 2F(7)

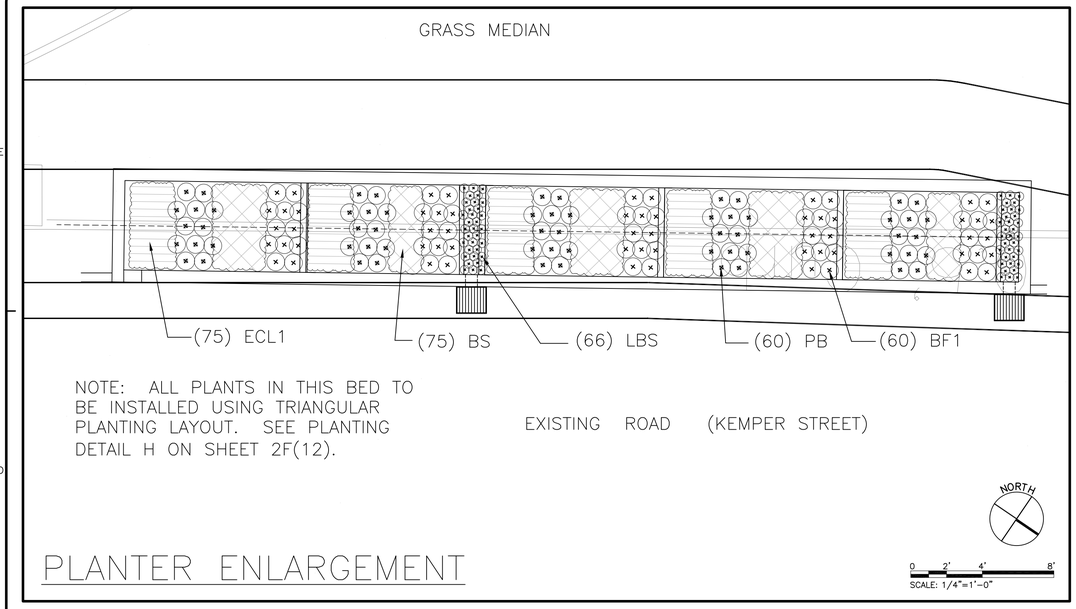

PLANTER ENLARGEMENT

NOTE: SEE MASTER PLANT SCHEDULE SHEET 2F(9)

NOTE: CONTRACTOR TO SCARIFY TO A DEPTH OF 12" BELOW GRADE.

NOTE: CONTRACTOR TO SEED ALL DISTURBED AREAS, SEE SHEET 2E(5).

NOTE: ANY PLANTS/TREES NOT IDENTIFIED ON PLAN TO BE REVIEWED WITH LANDSCAPE ARCHITECT ON SITE FOR DETERMINATION.

NOTE: USE ONLY EC-2 STAPLED IN PLACE FOR SEED MULCH IN TRAFFIC ISLANDS.

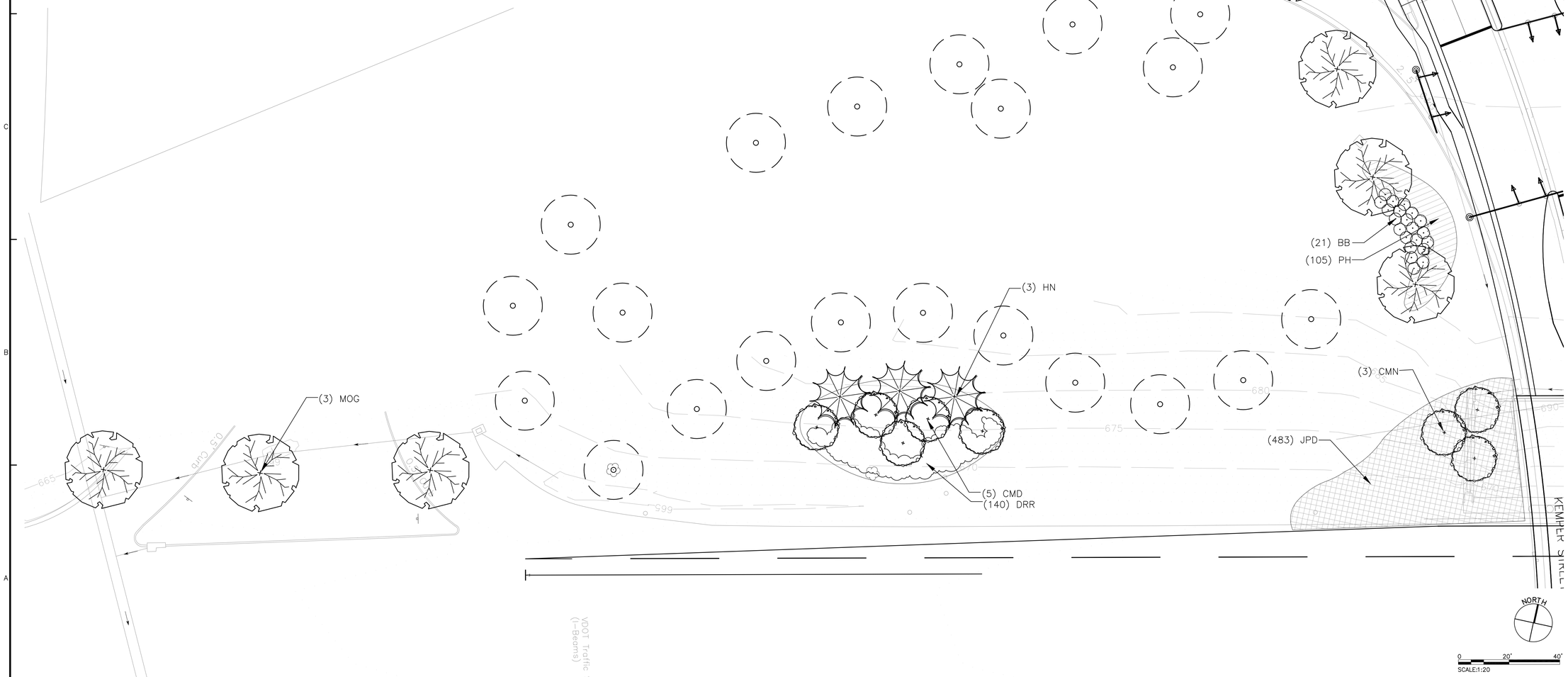

HDLA
HARVEY DESIGN
LAND ARCHITECTS
901 Jefferson St., Ste 208 Lynchburg, VA 24504
Tel: 434-528-5184
www.HDLA.biz

COMMONWEALTH OF VIRGINIA
PROCTOR S. HARVEY
Cert. No. 080
09-12-13
LANDSCAPE ARCHITECT

KEMPER STREET BRIDGE
KEMPER STREET OVER LYNCHBURG EXPRESSWAY (RT.29)

LYNCHBURG, VIRGINIA

MRK	DATE	DESCRIPTION

COMM NO:
DATE: 09-12-2013
DRAWN: NH/CA DESIGN: PH/CA
CHECK: PH
CAD FILE:
SHEET SCALE: AS SHOWN
SHEET TITLE
'A' QUADRANT LANDSCAPE PLAN
SHT. NO. 2F(8)

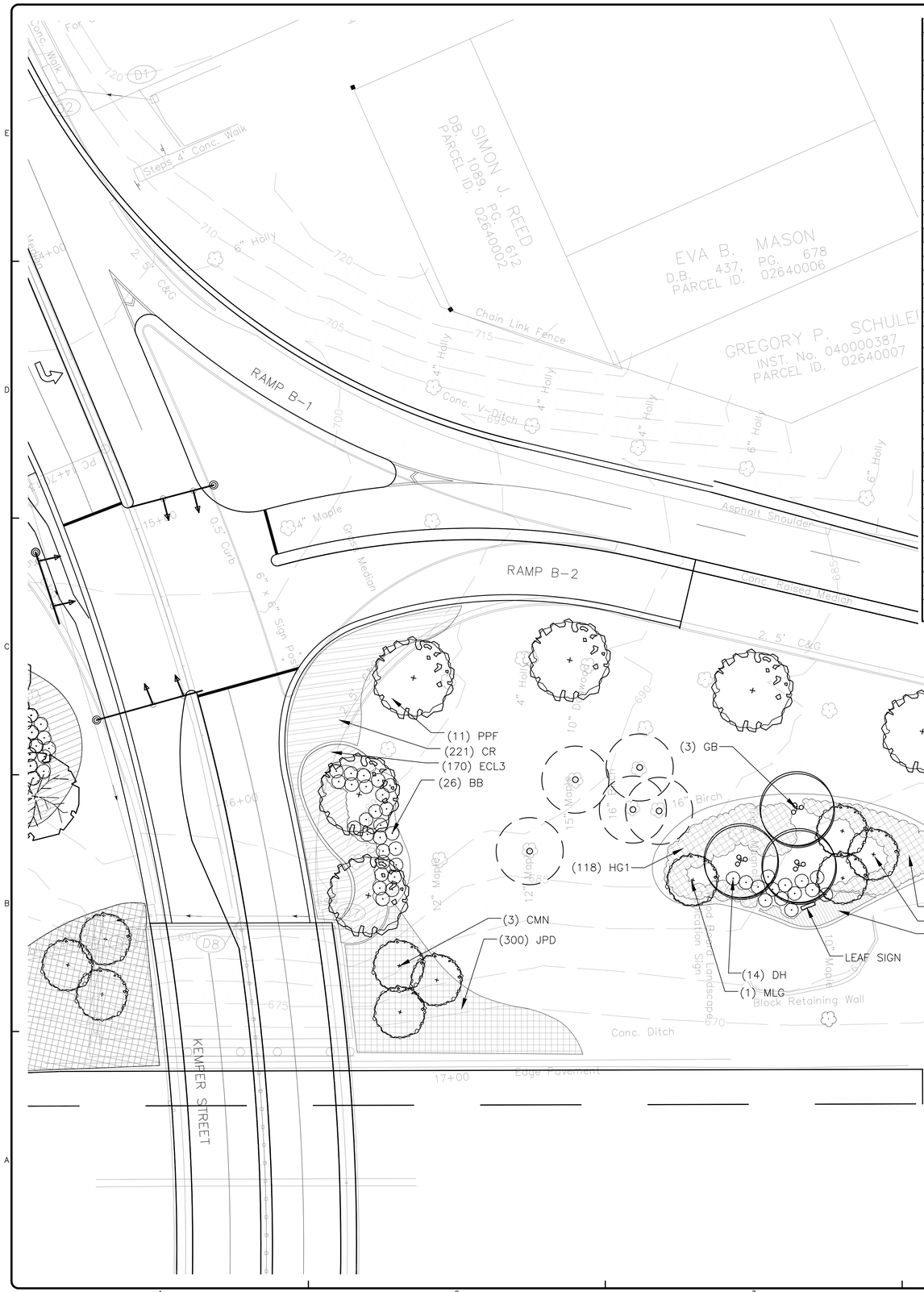

KEMPER STREET BRIDGE MASTER PLANT SCHEDULE										
PLANT INFORMATION				PLANT SIZE					MARK	NOTES
				INSTALLATION			MATURITY			
MARK	QTY	COMMON TRADE	BOTANICAL OR LATIN	CAL(IN.)	HEIGHT	CONT	HEIGHT	CANOPY		
TREES										
CMA	6	CRAPE MYRTLE 'ACOMA'	LAGERSTROEMIA INDICA'ACOMA'		8'	B&B				3-5 TRUNKS
CMD	5	CRAPE MYRTLE 'DYNAMITE'	LAGERSTROEMIA INDICA 'DYNAMITE'		7'-8'	B&B				3-5 TRUNKS
CMN	12	CRAPE MYRTLE 'NANCHEZ'	LAGERSTROEMIA INDICA 'NANCHEZ'		8'	B&B				3-5 TRUNKS
CMS	3	CRAPE MYRTLE 'SOUIX'	LAGERSTROEMIA INDICA 'SOUIX'		8'	B&B				3-5 TRUNKS
CVS	7	STELLAR PINK DOGWOOD	CORNUS x 'RUTGAN' STELLAR PINK	2.0	7'-8'	B&B				
GB	3	MALE GINKGO	GINKGO BILOBA	2.5	10'	B&B				MALE ONLY
HN	11	NELLIE STEVENS' HOLLY	ILEX x 'NELLIE R. STEVENS'		5'-6'	B&B				
MLG	1	MAGNOLIA LITTLE GEM	MAGNOLIA GRANDIFLORA 'LITTLE GEM'	2	7'-8'	B&B				SINGLE LEADER ONLY
MOG	11	OCTOBER GLORY' MAPLE	ACER RUBRUM 'OCTOBER GLORY'	2.5	10'	B&B				
PPF	20	PINK FLAIR CHERRY	PRUNUS SARGENTII 'JFS-KW58'	2.0	9'-10'	B&B				
SHRUBS										
BB	137	BURNING BUSH	EUONYMUS ALATUS		24"-30"	3 GAL				5' OC
CH	223	CHINESE HOLLY 'CARISSA'	ILEX CORNUTA 'CARISSA'		15"-18"	3 GAL				3' OC
CMP	306	POCOMOKE CRAPE MYRTLE	LAGERSTROEMIA INDICA 'POCOMOKE'		15"-18"	3 GAL				3' OC
DH	52	DWARF BURFORD HOLLY	ILEX CORNUTA 'DWARF BURFORD'		24"-30"	5 GAL				4' OC
DRA	32	APRICOT DRIFT ROSE	ROSA 'MEIMIRROTE'		12"-15"	3 GAL				3' OC
DRR	250	RED DRIFT ROSE	ROSA 'MEIGALPIO'		12"-15"	2 GAL				3' OC
HG1	95	LITTLE HENRY VIRGINIA SWEETSPIRE	ITEA VIRGINICA 'SPRICH'		15"-18"	3 GAL				3' OC
JPD	1675	DWARF JAPANESE GARDEN JUNIPER	JUNIPERUS PROCUMBENS 'NANA'		15"-18"	1 GAL				2' OC
GROUND COVER										
CR	221	CORAL CARPET ROSE	ROSA x 'NOALA'		12"-15"	2 GAL				18" OC
ECL3	170	COCONUT LIME CONEFLOWER	ECHINACEA PURPUREA 'COCONUT LIME'		15"-18"	1 GAL				2' OC
LV2	1034	VARIEGATED LIRIOPE	LIRIOPE MUSCARI 'VARIEGATA'		6"	4" POT				18" OC
PH	226	DWARF FOUNTAIN GRASS	PENNISETUM ALOPECUROIDES 'HAMELN'		12"-15"	1 GAL				3' OC
VBR	330	BLUE RUG JUNIPER	JUNIPERUS HORIZONTALIS 'WILTONII'		12"-15"	1 GAL				30" OC
RAIN GARDEN PLANTS										
BF1	50	BLUEFLAG IRIS	IRIS VERSICOLOR		10"-12"	1 GAL				1' OC
BF2	46	BLUEFLAG IRIS	IRIS VERSICOLOR		10"-12"	1 GAL				2' OC
BS	75	BLACKEYED SUSAN	RUDBECKIA HIRTA		10"-12"	1 GAL				1' OC
ECL1	75	COCONUT LIME CONEFLOWER	ECHINACEA PURPUREA 'COCONUT LIME'		10"-12"	1 GAL				1' OC
ECL2	64	COCONUT LIME CONEFLOWER	ECHINACEA PURPUREA 'COCONUT LIME'		10"-12"	1 GAL				2' OC
HG2	49	LITTLE HENRY VIRGINIA SWEETSPIRE	ITEA VIRGINICA 'SPRICH'		15"-18"	3 GAL				3' OC
LBS	66	LITTLE BLUESTEM	SCHIZACHYRIUM SCOPARIUM		10"-12"	1 GAL				6" OC TIGHTLY STAGGERED
LV1	320	VARIEGATED LIRIOPE	LIRIOPE MUSCARI 'VARIEGATA'		6"	1 GAL				18" OC
PB	50	PRAIRIE BLAZING STAR	LIATRIS PYCNOSTACHYA		10"-12"	1 GAL				1' OC
RTD	41	VARIEGATED RED TWIG DOGWOOD	CORNUS ALBA 'ELEGANTISSIMA'		18"-24"	3 GAL				4' OC

NOTE: USE ONLY EC-2 STAPLED IN PLACE FOR SEED MULCH IN TRAFFIC ISLANDS.

NOTE: CONTRACTOR TO SCARIFY TO A DEPTH OF 12" BELOW GRADE.

NOTE: CONTRACTOR TO SEED ALL DISTURBED AREAS, SEE SHEET 2E(5).

NOTE: ANY PLANTS/TREES NOT IDENTIFIED ON PLAN TO BE REVIEWED WITH LANDSCAPE ARCHITECT ON SITE FOR DETERMINATION.

HDLA
HARVEY DESIGN
LAND ARCHITECTS
901 Jefferson St., Ste 208 Lynchburg, VA 24504
Tel: 434-528-5184
www.HDLA.biz

COMMONWEALTH OF VIRGINIA
PROCTOR S. HARVEY
Cert. No. 080
09-12-13
LANDSCAPE ARCHITECT

KEMPER STREET BRIDGE
KEMPER STREET OVER LYNCHBURG EXPRESSWAY (RT.29)
LYNCHBURG, VIRGINIA

MRK	DATE	DESCRIPTION

COMM NO:
DATE: 09-12-2013
DRAWN: NH/CA DESIGN: PH/CA
CHECK: PH
CAD FILE:
SHEET SCALE: AS SHOWN
SHEET TITLE
'B' QUADRANT LANDSCAPE PLAN
SHT. NO. 2F(9)

NOTE: SEE MASTER PLANT SCHEDULE SHEET 2F(9)

NOTE: USE ONLY EC-2 STAPLED IN PLACE FOR SEED MULCH IN TRAFFIC ISLANDS.

NOTE: CONTRACTOR TO SCARIFY TO A DEPTH OF 12" BELOW GRADE.

NOTE: CONTRACTOR TO SEED ALL DISTURBED AREAS, SEE SHEET 2E(5).

NOTE: ANY PLANTS/TREES NOT IDENTIFIED ON PLAN TO BE REVIEWED WITH LANDSCAPE ARCHITECT ON SITE FOR DETERMINATION.

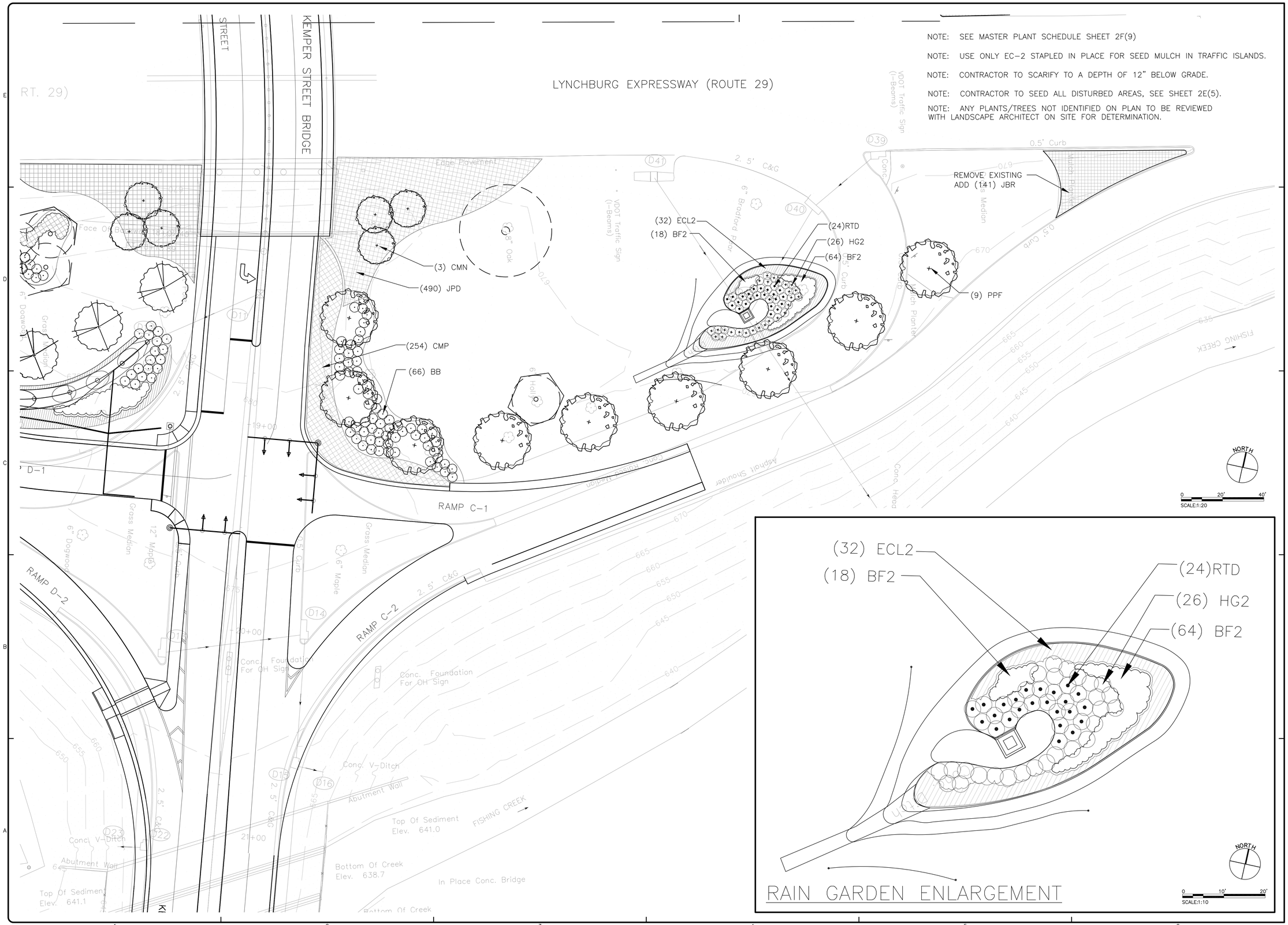

RAIN GARDEN ENLARGEMENT

HDLA
HARVEY DESIGN
LAND ARCHITECTS
901 Jefferson St., Ste 206 Lynchburg, VA 24504
Tel: 434-528-5184
www.HDLA.biz

COMMONWEALTH OF VIRGINIA
PROCTOR S. HARVEY
Cert. No. 080
09-12-13
LANDSCAPE ARCHITECT

KEMPER STREET BRIDGE
KEMPER STREET OVER LYNCHBURG EXPRESSWAY (RT.29)
LYNCHBURG, VIRGINIA

MRK	DATE	DESCRIPTION

COMM NO:
DATE: 09-12-2013
DRAWN: NH/CA DESIGN: PH/CA
CHECK: PH
CAD FILE:
SHEET SCALE: AS SHOWN
SHEET TITLE
'C' QUADRANT LANDSCAPE PLAN
SHT. NO. 2F(10)

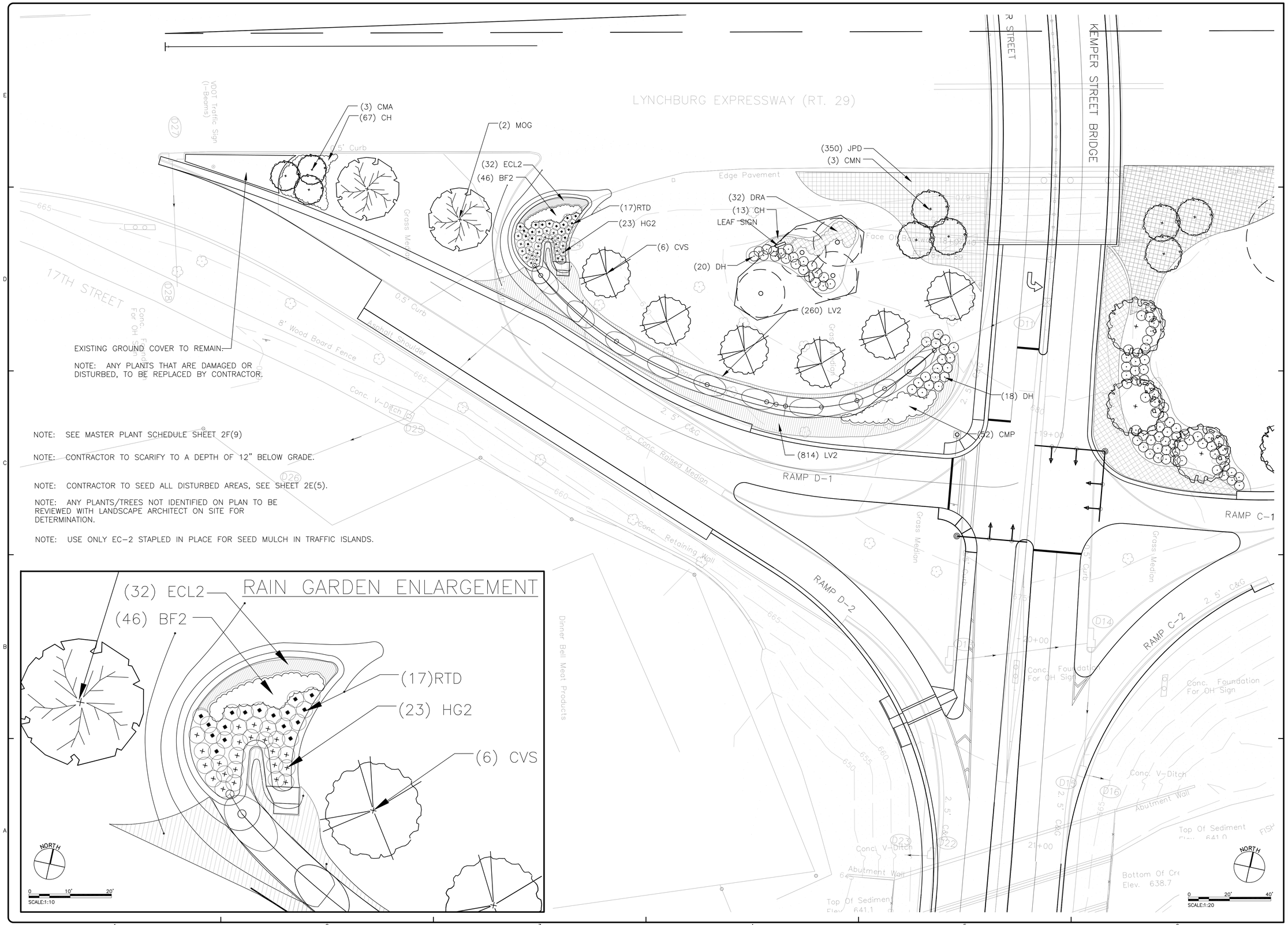

HDLA
HARVEY DESIGN
LAND ARCHITECTS
901 Jefferson St., Ste 206 Lynchburg, VA 24504
Tel: 434-528-5184
www.HDLA.biz

COMMONWEALTH OF VIRGINIA
PROCTOR S. HARVEY
Cert. No. 080
09-12-13
LANDSCAPE ARCHITECT

KEMPER STREET BRIDGE
KEMPER STREET OVER LYNCHBURG EXPRESSWAY (RT.29)

LYNCHBURG, VIRGINIA

MRK	DATE	DESCRIPTION

COMM NO:
DATE: 09-12-2013
DRAWN: NH/CA DESIGN: PH/CA
CHECK: PH
CAD FILE:
SHEET SCALE: AS SHOWN
SHEET TITLE
'D' QUADRANT LANDSCAPE PLAN
SHT. NO. 2F(11)

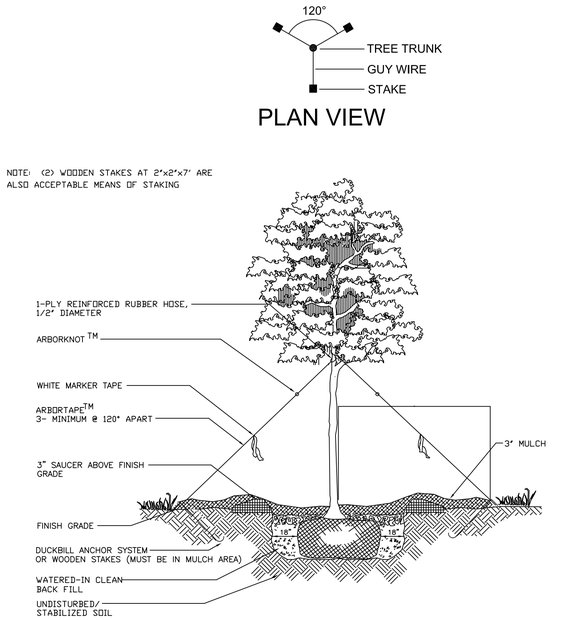

A TREE PLANTING SINGLE LEADER
NOT TO SCALE

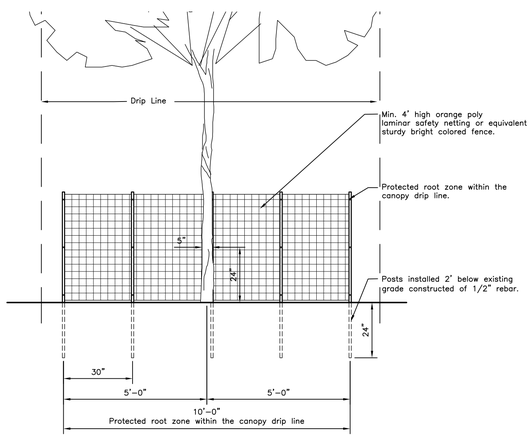

B EXISTING TREE PROTECTION
NOT TO SCALE

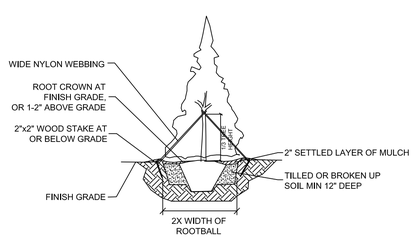

C EVERGREEN TREE PLANTING
NOT TO SCALE

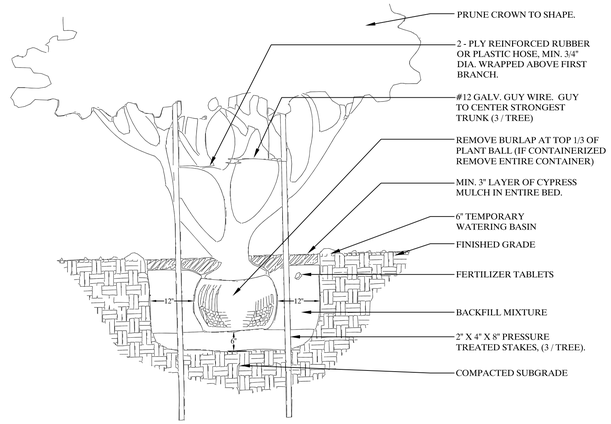

D TREE PLANTING MULTI-TRUNK
NOT TO SCALE

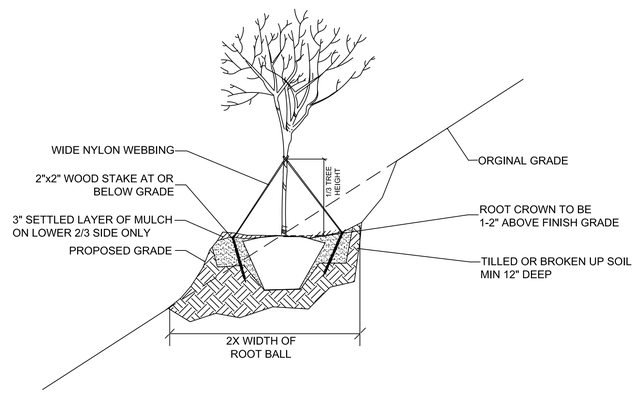

E TREE PLANTING ON SLOPE
NOT TO SCALE

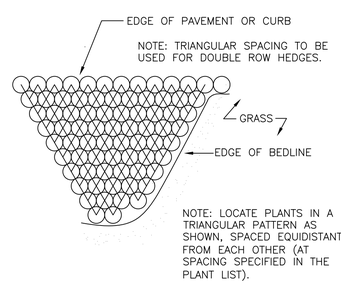

F SHRUB SPACING
NOT TO SCALE

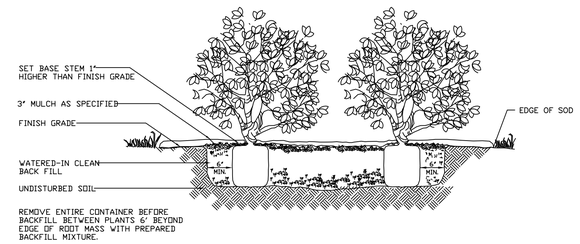

G SHRUB & GROUNDCOVER PLANTING
NOT TO SCALE

PLANTING NOTES TO SUPPLEMENT SPECIFICATIONS:

1. REMOVE PINNING NAILS OR ROPE LACING FROM EARTH BALL TOPS AFTER PLANTING.
2. CUT AWAY THE WRAPPING MATERIALS AROUND NECK/TRUNK OF PLANT.
3. REMOVE ALL NON-DEGRADABLE WRAPPING.
4. FOLD BACK THE TOP OF WIRE FROM WIRE BASKETS.
5. REMOVE ALL ROPE FROM TRUNKS OF TREES.
6. CUT THROUGH ROOTS CIRCLING THE ROOT BALL EXTERIOR IN CONTAINER GROWN TREES AND SHRUBS TO PREVENT THE ROOTS FROM GIRDLING THE PLANT.
7. WATER THOROUGHLY TO SETTLE AIR POCKETS WHEN HOLE IS HALF FILLED.
8. WATER ALL PLANTS IMMEDIATELY AFTER PLANTING.
9. REMOVE TAGS AND LABELS FROM TREES AND SHRUBS TO PREVENT GIRDLING BRANCHES AND TRUNKS.
10. MULCH PITS, TRENCHES AND PLANTED AREAS. PROVIDE 3-INCH THICKNESS OF HARDWOOD MULCH.
11. FORM SAUCER WITH MINIMUM 4" HIGH BERM (OR 1 1/2" HEIGHT FOR EACH CALIPER OF TREE) AROUND TREE AND SHRUB PITS 12" WIDER THAN BALL DIAMETER.
    ON SLOPES FORM SAUCER ONLY ON LOWER 2/3 OF PLANT.
12. KEEP MULCH FROM TOUCHING THE TREE TRUNK OR SHRUB STEMS.
13. PROVIDE TREE SPECIES WITH A SINGLE MAIN TRUNK. TREES THAT HAVE THE MAIN TRUNK FORMING A "Y" SHAPE ARE NOT ACCEPTABLE, UNLESS NOTED.
14. LIFT AND SET THE TREE BY ROOT BALL ONLY. DO NOT LIFT USING THE TREE TRUNK AND DO NOT USE TREE TRUNK AS A LEVER.
15. SET THE TOP OF THE ROOT BALL 1" ABOVE SOIL SURFACE OR SLIGHTLY HIGHER IF THE SOIL IS PRONE TO SETTLING.
16. REMOVE ANY TRUNK WRAP REMAINING AT TIME OF PLANTING. NO WRAPS SHALL BE PLACED ON TRUNK.

THE CONTRACTOR IS ENCOURAGED TO VISIT THE SITE MONTHLY TO REVIEW PLANT GROWTH AND MAINTENANCE, AND TO NOTIFY LANDSCAPE ARCHITECT AND OWNER IN WRITING OF ANY PROBLEMS HE NOTICES.

ALL SHRUB BEDS TO BE STRIPPED OF ALL GRASS, WEEDS AND OTHER GROWTH. ROTO-TILL ALL BEDS MINIMUM 6" DEEP, INCORPORATING [THREE (3) PARTS EXISTING SOIL TO ONE (1) PART PEAT MOSS AND 1-LB. PLANT FERTILIZER PER CUBIC YARD] PRIOR TO PLANTING.

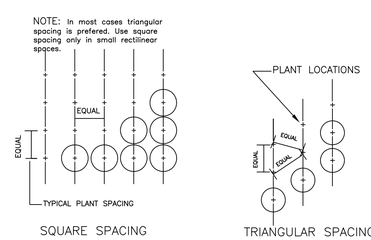

H GROUNDCOVER SPACING
NOT TO SCALE

SOD SHALL BE LAID IN A STAGGERED MANNER. SOD STRIPS SHALL BE JOINED TIGHTLY AGAINST ONE ANOTHER SPACES MEASURING GREATER THAN 1/2" SHALL BE REJECTED.

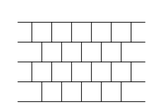

I SOD PLANTING
NOT TO SCALE

HDLA
HARVEY DESIGN
LAND ARCHITECTS
901 Jefferson St., Ste 208 Lynchburg, VA 24504
Tel: 434-528-5184 www.HDLA.biz

COMMONWEALTH OF VIRGINIA
PROCTOR S. HARVEY
Cert. No. 080
09-05-13
LANDSCAPE ARCHITECT

KEMPER STREET BRIDGE
KEMPER STREET OVER
LYNCHBURG EXPRESSWAY (RT.29)
LYNCHBURG, VIRGINIA

MRK	DATE	DESCRIPTION

COMM NO:
DATE: 09-05-2013
DRAWN: NH/CA DESIGN: PH/CA
CHECK: PH
CAD FILE:
SHEET SCALE: AS SHOWN
SHEET TITLE
LANDSCAPE DETAILS & SPECS
SHT. NO. 2F(12)

SUPERVISED BY CITY OF LYNCHBURG
PROJECT MANAGER STEVE CAMPBELL, MATTERN & CRAIG (540)-345-9342
SURVEYED BY MATTERN & CRAIG (540)-345-9342
DESIGN BY MIKE AGEE, MATTERN & CRAIG

REVISED	STATE	ROUTE	PROJECT	SHEET NO.
	VA.	29	U000-118-204, C-501	2G(1)

DESIGN FEATURES RELATING TO CONSTRUCTION OR TO REGULATION AND CONTROL OF TRAFFIC MAY BE SUBJECT TO CHANGE AS DEEMED NECESSARY BY THE DEPARTMENT

PB-1

NO PROJECTION OF PIPE ABOVE GROUND LINE

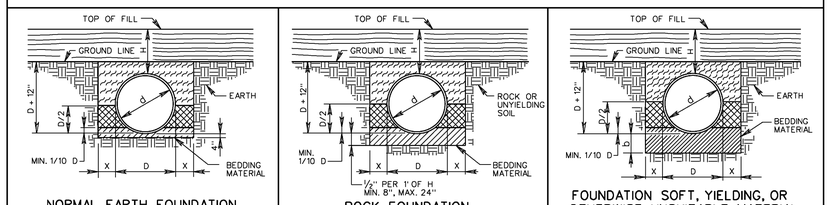

NORMAL EARTH FOUNDATION — ROCK FOUNDATION — FOUNDATION SOFT, YIELDING, OR OTHERWISE UNSUITABLE MATERIAL

PIPE PROJECTION ABOVE GROUND LINE

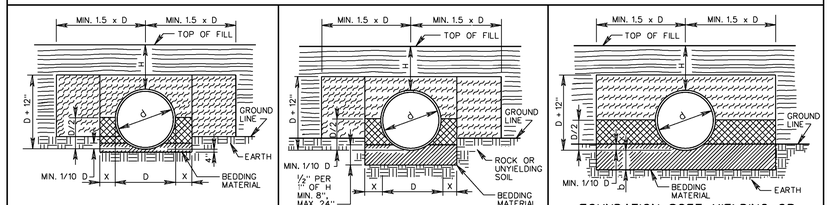

NORMAL EARTH FOUNDATION — ROCK FOUNDATION — FOUNDATION SOFT, YIELDING, OR OTHERWISE UNSUITABLE MATERIAL

- BEDDING MATERIAL IN ACCORDANCE WITH SECTION 302 OF THE ROAD AND BRIDGE SPECIFICATIONS.
- CLASS I BACKFILL MATERIAL IN ACCORDANCE WITH SECTION 302 OF THE ROAD AND BRIDGE SPECIFICATIONS.
- FOR PLASTIC PIPE CLASS I BACKFILL MATERIAL IN ACCORDANCE WITH SECTION 302 OF THE ROAD AND BRIDGE SPECIFICATIONS.
- FOR ALL OTHER PIPE REGULAR BACKFILL MATERIAL IN ACCORDANCE WITH SECTION 302 OF THE ROAD AND BRIDGE SPECIFICATIONS.
- EMBANKMENT

NOTES:

FOR GENERAL NOTES ON PIPE BEDDING, SEE INSTALLATION OF PIPE CULVERTS AND STORM SEWERS GENERAL NOTES ON SHEET 107.00.

CRUSHED GLASS CONFORMING TO THE SIZE REQUIREMENTS FOR CRUSHER RUN AGGREGATE SIZE 25 AND 26 MAY BE USED IN PLACE OF CLASS I BACKFILL.

VDOT ROAD AND BRIDGE STANDARDS

INSTALL. OF PIPE CULVERTS AND STORM SEWERS CIRC. PIPE BEDDING AND BACKFILL - METHOD "A"

VIRGINIA DEPARTMENT OF TRANSPORTATION

SHEET 1 OF 4	REVISION DATE	SPECIFICATION REFERENCE
107.01	7/11	302 303

CG-12

GENERAL NOTES:

1. THE DETECTABLE WARNING SHALL BE PROVIDED BY TRUNCATED DOMES.
2. DETECTABLE WARNING TO BE CLASS A-3 CONCRETE (CLASS A-4 IF PRECAST) WITH SLIP RESISTANT INTEGRAL SURFACE COVERING THE FULL WIDTH OF THE RAMP FLOOR BY 2 FOOT IN LENGTH IN THE DIRECTION OF PEDESTRIAN TRAVEL. OTHER TYPES OF MATERIAL WITH THE TRUNCATED DOMES DETECTABLE WARNING MAY BE USED WITH THE APPROVAL OF THE ENGINEER.
3. SLOPING SIDES OF CURB RAMP MAY BE POURED MONOLITHICALLY WITH RAMP FLOOR OR BY USING PERMISSIBLE CONSTRUCTION JOINT WITH REQUIRED BARS.
4. IF RAMP FLOOR IS PRECAST, HOLES MUST BE PROVIDED FOR DOWEL BARS SO THAT ADJOINING FLARED SIDES CAN BE CAST IN PLACE AFTER PLACEMENT OF PRECAST RAMP FLOOR. PRECAST CONCRETE SHALL BE CLASS A-4.
5. REQUIRED BARS ARE TO BE NO. 5 X 8' PLACED 1' CENTER TO CENTER ALONG BOTH SIDES OF THE RAMP FLOOR, MID-DEPTH OF RAMP FLOOR. MINIMUM CONCRETE COVER 1½".
6. CURB / CURB AND GUTTER SLOPE TRANSITIONS ADJACENT TO CURB RAMPS ARE INCLUDED IN PAYMENT FOR CURB / CURB AND GUTTER.
7. CURB RAMPS ARE TO BE LOCATED AS SHOWN ON THE PLANS OR AS DIRECTED BY THE ENGINEER. THEY ARE TO BE PROVIDED AT INTERSECTIONS WHEREVER AN ACCESSIBLE ROUTE WITHIN THE RIGHT OF WAY OF A HIGHWAY FACILITY CROSSES A CURB REGARDLESS OF WHETHER SIDEWALK IS EXISTING, PROPOSED, OR NONEXISTENT. THEY MUST BE LOCATED WITHIN PEDESTRIAN CROSSWALKS AS SHOWN ON PLANS OR AS DIRECTED BY THE ENGINEER, AND SHOULD NOT BE LOCATED BEHIND VEHICLE STOP LINES, EXISTING LIGHT POLES, FIRE HYDRANTS, DROP INLETS, ETC. ACCESSIBLE ROUTES PROVIDE A CONTINUOUS UNOBSTRUCTED, STABLE, FIRM AND SLIP RESISTANT PATH CONNECTING ALL ACCESSIBLE ELEMENTS OF A FACILITY THAT CAN BE APPROACHED, ENTERED AND USED BY PEDESTRIANS.
8. RAMPS MAY BE PLACED ON RADIAL OR TANGENTIAL SECTIONS PROVIDED THAT THE CURB OPENING IS PLACED WITHIN THE LIMITS OF THE CROSSWALK AND THAT THE SLOPE AT THE CONNECTION OF THE CURB OPENING IS PERPENDICULAR TO THE CURB.
9. TYPICAL CONCRETE SIDEWALK IS 4" THICK. WHEN THE ENTRANCE RADII CANNOT ACCOMMODATE THE TURNING REQUIREMENTS OF ANTICIPATED HEAVY TRUCK TRAFFIC, REFER TO STANDARD CG-13, COMMERCIAL ENTRANCE (HEAVY TRUCK TRAFFIC) FOR CONCRETE DEPTH.
10. WHEN CURB RAMPS ARE USED IN CONJUNCTION WITH A SHARED USE PATH, THE MINIMUM WIDTH SHALL BE THE WIDTH OF THE SHARED USE PATH
11. WHEN ONLY ONE CURB RAMP IS PROVIDED FOR TWO CROSSINGS (DIAGONAL), A 4' x 4' LANDING AREA SHALL BE PROVIDED TO MANEUVER A WHEELCHAIR INTO THE CROSSWALK WITHOUT GOING INTO THE TRAVELWAY. THIS 4' x 4' LANDING AREA MAY INCLUDE THE GUTTER PAN.
12. ALL CASES WHERE CURB RAMPS INTERSECT A RADIAL SECTION OF CURB AT ENTRANCES OR STREET CONNECTIONS THE DETECTABLE WARNING SURFACE SHALL HAVE A FACTORY RADIUS OR BE FIELD -MODIFIED AS RECOMMENDED BY THE MANUFACTURER TO MATCH THE BACK OF CURB.

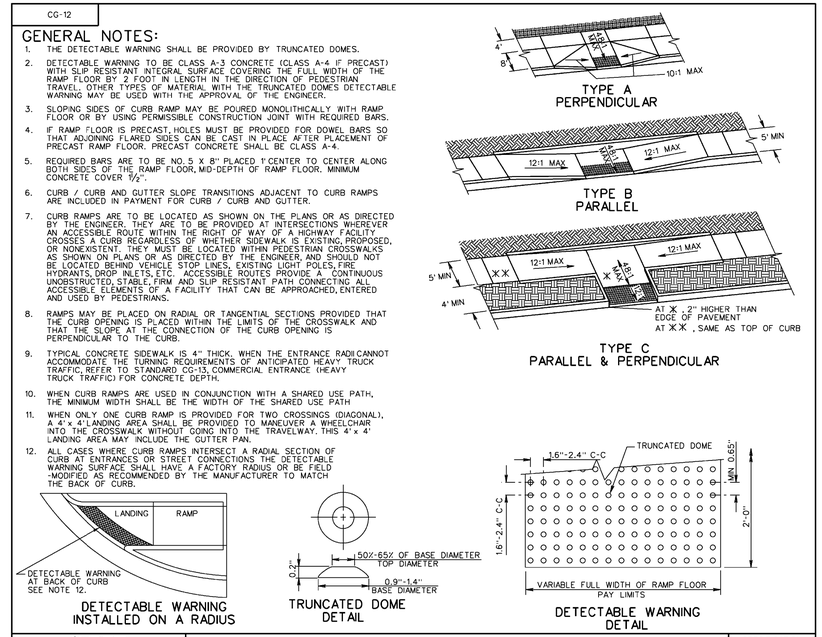

VDOT ROAD AND BRIDGE STANDARDS

CG-12 DETECTABLE WARNING SURFACE

(GENERAL NOTES)

VIRGINIA DEPARTMENT OF TRANSPORTATION

SHEET 1 OF 5	REVISION DATE	SPECIFICATION REFERENCE
203.05	7/11	105 502

CG-12

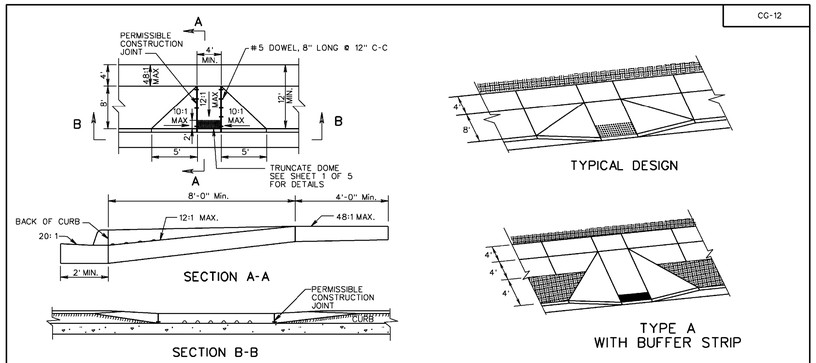

NOTES:

FOR GENERAL NOTES ON THE DETECTABLE WARNING SURFACE, SEE SHEET 1 OF 5.

THIS DESIGN TO BE USED FOR CONSTRUCTION THAT INCORPORATES WIDER SIDEWALK. LANDING (4' WIDE) REQUIRED AT TOP OF CURB RAMP. MINIMUM CURB RAMP LENGTH 8 FEET FOR NEW CONSTRUCTION, 6 FEET FOR ALTERATIONS.

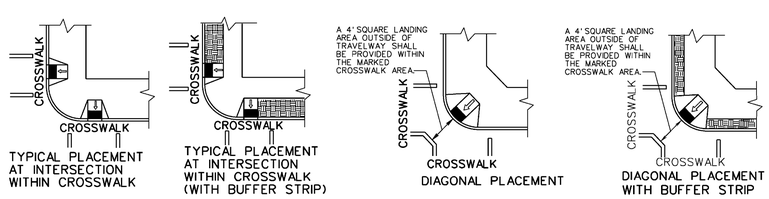

SPECIFICATION REFERENCE
105 502

CG-12 DETECTABLE WARNING SURFACE

TYPE A (PERPENDICULAR) APPLICATION

VIRGINIA DEPARTMENT OF TRANSPORTATION

VDOT ROAD AND BRIDGE STANDARDS

REVISION DATE	SHEET 2 OF 5
7/11	203.06

CG-12

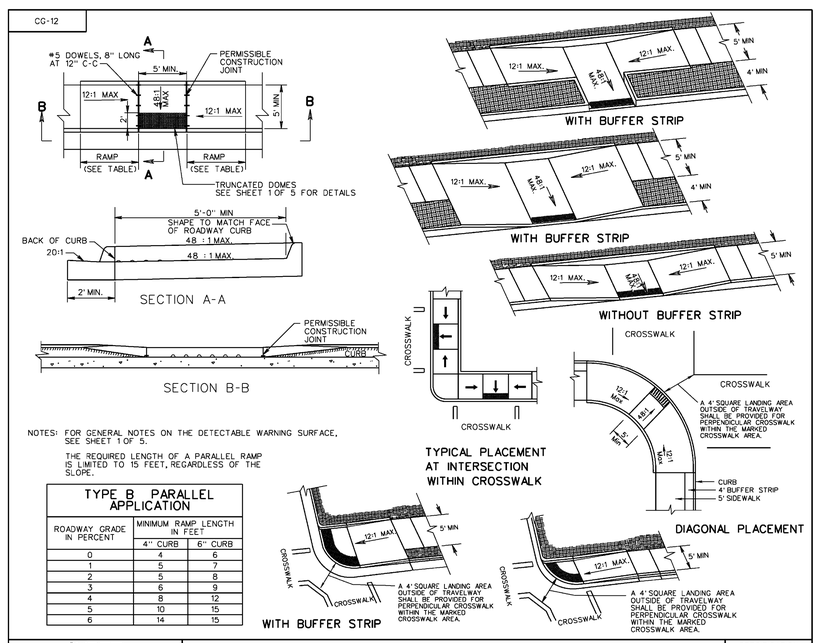

NOTES: FOR GENERAL NOTES ON THE DETECTABLE WARNING SURFACE, SEE SHEET 1 OF 5.

THE REQUIRED LENGTH OF A PARALLEL RAMP IS LIMITED TO 15 FEET, REGARDLESS OF THE SLOPE.

TYPE B PARALLEL APPLICATION

ROADWAY GRADE IN PERCENT	MINIMUM RAMP LENGTH IN FEET	
	4" CURB	6" CURB
0	4	6
1	5	7
2	5	8
3	6	9
4	8	12
5	10	15
6	14	15

VDOT ROAD AND BRIDGE STANDARDS

CG-12 DETECTABLE WARNING SURFACE

TYPE B (PARALLEL) APPLICATION

VIRGINIA DEPARTMENT OF TRANSPORTATION

SHEET 3 OF 5	REVISION DATE	SPECIFICATION REFERENCE
203.07	7/11	105 502

PROJECT	SHEET NO.
U000-118-204	2G(1)

SUPERVISED BY CITY OF LYNCHBURG
PROJECT MANAGER STEVE CAMPBELL, MATTERN & CRAIG (540)-345-9342
SURVEYED BY MATTERN & CRAIG (540)-345-9342
DESIGNED BY MIKE AGEE, MATTERN & CRAIG

REVISED	STATE	ROUTE	PROJECT	SHEET NO.
	VA.	29	U000-118-204, C-501	2G(2)

DESIGN FEATURES RELATING TO CONSTRUCTION OR TO REGULATION AND CONTROL OF TRAFFIC MAY BE SUBJECT TO CHANGE AS DEEMED NECESSARY BY THE DEPARTMENT

MB-11A

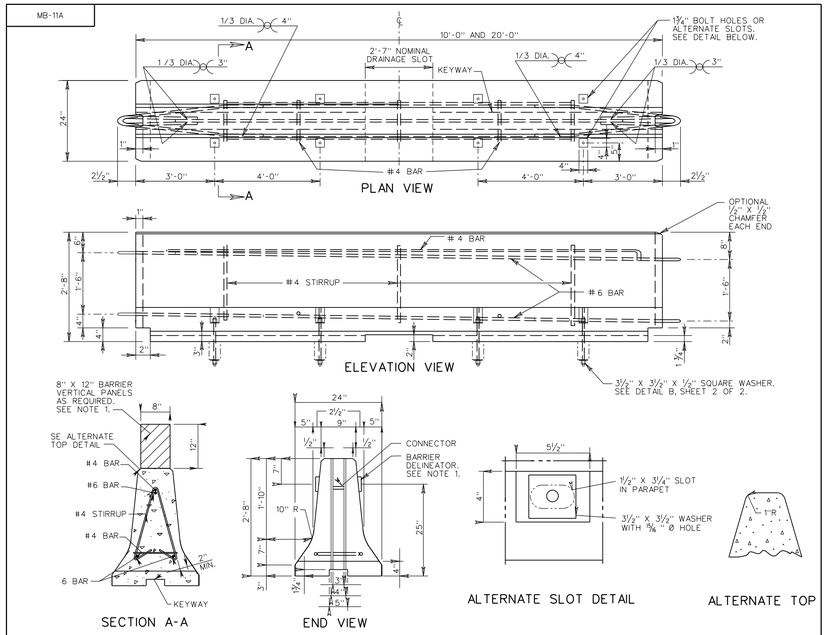

VDOT ROAD AND BRIDGE STANDARDS		TRAFFIC BARRIER SERVICE CONCRETE PARAPET (DOUBLE FACE) (FOR TEMPORARY INSTALLATION ON BRIDGE DECK EXTERIOR) VIRGINIA DEPARTMENT OF TRANSPORTATION	SPECIFICATION REFERENCE
SHEET 1 OF 3	REVISION DATE 01/09		105 512
502.13			

GR-HDW

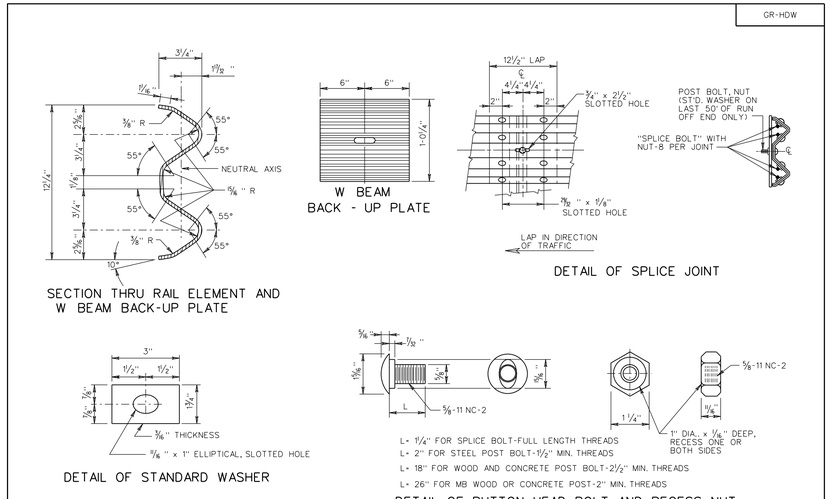

NOTES:

ALL HARDWARE IS TO BE GALVANIZED IN ACCORDANCE WITH THE SPECIFICATIONS.

THE GUARDRAIL AND MEDIAN BARRIER COMPONENTS DEPICTED IN ARTBA TECHNICAL BULLETIN NUMBER 268B MAY BE SUBSTITUTED IF INTERCHANGEABLE WITH THE STANDARDS FOR GUARDRAIL (GR) OR MEDIAN BARRIER (MB) AND APPROVED BY THE ENGINEER.

SPECIFICATION REFERENCE	STANDARD GUARDRAIL HARDWARE VIRGINIA DEPARTMENT OF TRANSPORTATION	VDOT ROAD AND BRIDGE STANDARDS
221 505		REVISION DATE 4/09 — SHEET 1 OF 3 — 501.01

MB-11A

NOTES:

1. BARRIER DELINEATOR IS TO BE SPACED IN ACCORDANCE WITH SECTION 702 OF THE ROAD AND BRIDGE SPECIFICATIONS AND THE BARRIER VERTICAL PANELS ARE TO BE SPACED IN ACCORDANCE WITH THE VIRGINIA WORK AREA PROTECTION MANUAL.
2. REFLECTIVE SURFACE, IN ALL INSTANCES, ARE TO BE FACING ONCOMING TRAFFIC.
3. COST OF BARRIER DELINEATOR AND BARRIER VERTICAL PANELS ARE TO BE INCLUDED IN PRICE BID PER LINEAR FOOT OF BARRIER SERVICE.
4. ANCHOR BOLTS SHALL BE INSTALLED ON TRAFFIC SIDE.
5. CONCRETE 4000 PSI. (MIN.)
6. WELDED WIRE FABRIC MAY BE ONE SHEET BENT TO FIT CONFIGURATION OR TWO SEPARATE SHEETS, ONE ON EACH FACE.
7. AFTER REMOVING TEMPORARY BARRIER, CUT 7/8" Ø BOLT OR THREADED ROD AS LOW AS PRACTICAL BELOW ROADWAY SURFACE AND FILL RECESS WITH EPOXY BONDING COMPOUND EP-4 (DETAIL "A") OR REMOVE 7/8" Ø BOLT OR THREADED ROD AND FILL HOLE WITH GROUT BONDED WITH EPOXY BONDING COMPOUND EP-4, (DETAIL "A").
8. FOR POSITIVE CONNECTION DETAILS AND DIMENSIONS SEE STANDARD MB-INS.

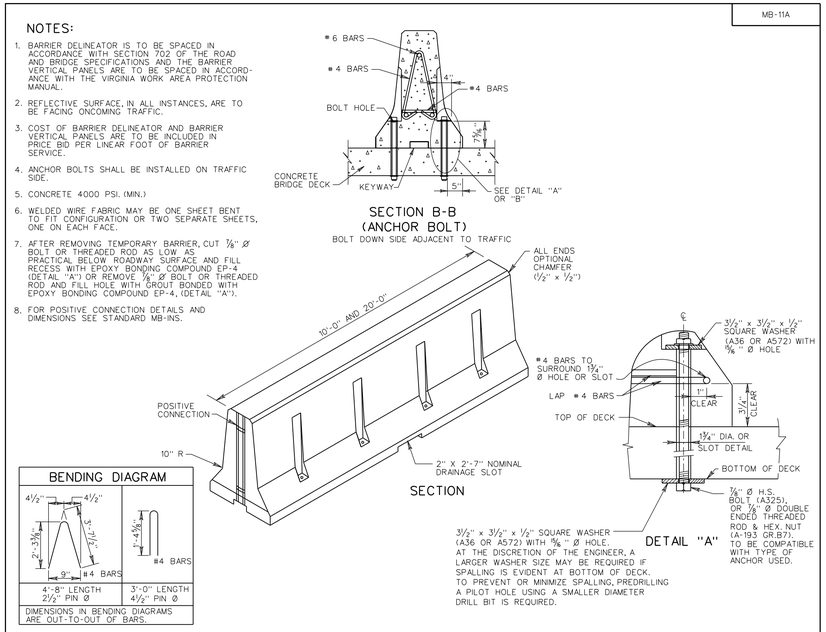

SPECIFICATION REFERENCE	TRAFFIC BARRIER SERVICE CONCRETE PARAPET (DOUBLE FACE) (FOR TEMPORARY INSTALLATION ON BRIDGE DECK EXTERIOR) VIRGINIA DEPARTMENT OF TRANSPORTATION	VDOT ROAD AND BRIDGE STANDARDS
105 512		REVISION DATE 01/09 — SHEET 2 OF 3 — 502.14

GR-FOA-1

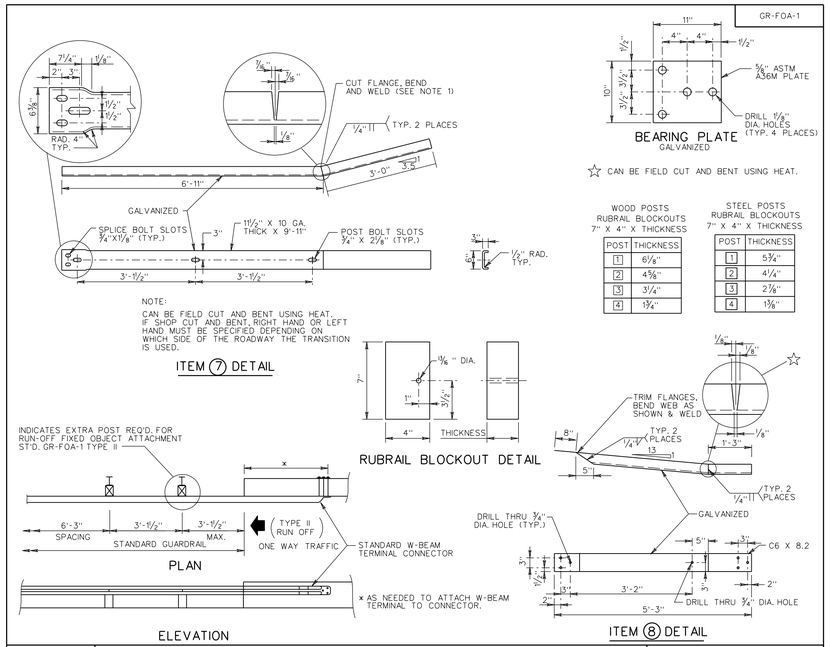

SPECIFICATION REFERENCE	W-BEAM GUARDRAIL - FIXED OBJECT ATTACHMENT (RUBRAIL AND HARDWARE DETAILS) VIRGINIA DEPARTMENT OF TRANSPORTATION	VDOT ROAD AND BRIDGE STANDARDS
505		REVISION DATE 4/09 — SHEET 3 OF 3 — 501.27

PROJECT	SHEET NO.
U000-118-204	2G(2)

SUPERVISED BY CITY OF LYNCHBURG
PROJECT MANAGER STEVE CAMPBELL, MATTERN & CRAIG (540)-345-9342
SURVEYED BY MATTERN & CRAIG (540)-345-9342
DESIGNED BY MIKE AGEE, MATTERN & CRAIG

REVISED	STATE	ROUTE	PROJECT	SHEET NO.
	VA.	29	U000-118-204, C-501	2G(3)

DESIGN FEATURES RELATING TO CONSTRUCTION OR TO REGULATION AND CONTROL OF TRAFFIC MAY BE SUBJECT TO CHANGE AS DEEMED NECESSARY BY THE DEPARTMENT

GR-INS

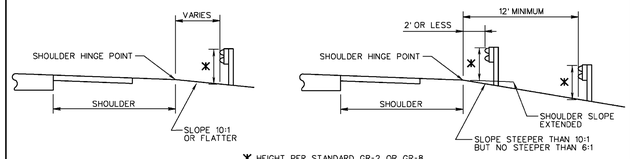

MEASURING GUARDRAIL HEIGHT ON FRONT SLOPE RELATIVE TO SHOULDER HINGE POINT

FACE OF GUARDRAIL IS TO BE ALIGNED WITH FACE OF CURB.

DESIGN SPEED > 45 MPH USE GR-2A OR OPTIONAL GR-2 STIFFENING METHOD. DESIGN SPEED ≤ 45 MPH USE GR-2.

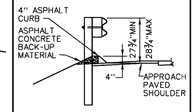

ASPHALT CURB SECTION

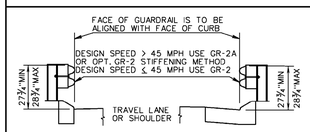

GR-2 INSTALLATION WITH CG-3 OR CG-7 CURB

FOR GUARDRAIL DESIGN POLICIES USING CG-2 AND CG-6 OR URBAN DESIGNS WITH SIDEWALK OR SIDEWALK SPACE SEE APPENDIX A OF THE ROAD DESIGN MANUAL

TABLE I
NORMAL GUARDRAIL LOCATION-THROUGH TRAFFIC LANES LEFT OF TRAFFIC

TOTAL SHOULDER WIDTH (S) (PAVED & GRADING)	PAVED SHOULDER WIDTH (P_S)	OFFSET FROM EDGE OF PAVEMENT TO FACE OF GUARDRAIL (O)
17'	12'	14'
15'	3', 4', OR 10'	12'
13'	3'	10'
11'	3'	8'
8' (MED.)	3' or 4'	5'

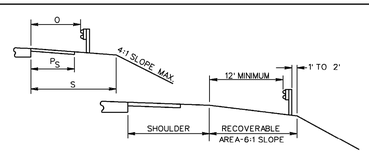

GUARDRAIL LOCATION ON RECOVERABLE SLOPE

TABLE II
NORMAL GUARDRAIL LOCATION-THROUGH TRAFFIC LANES RIGHT OF TRAFFIC

TOTAL SHOULDER WIDTH (S) (PAVED & GRADING)	PAVED SHOULDER WIDTH (P_S)	OFFSET FROM EDGE OF PAVEMENT TO FACE OF GUARDRAIL (O)
17'	12'	14'
15'	6' or 10'	12'
13'	8'	10'
11'	0, 3', 4' or 6'	8'
9'	0, 3' or 4'	6'
8'	3'	5'
7'	2'	4'
5'	0	2'

SPECIFICATION REFERENCE		VDOT ROAD AND BRIDGE STANDARDS	
221 505	A COPY OF THE ORIGINAL SEALED AND SIGNED DRAWING IS ON FILE IN THE CENTRAL OFFICE. **W-BEAM GUARDRAIL INSTALLATION CRITERIA** VIRGINIA DEPARTMENT OF TRANSPORTATION	REVISION DATE 7/11	SHEET 6 OF 9 501.39

GR-2, 2A

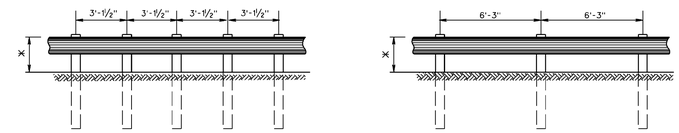

* 27¾" MIN - 28¾" MAX RAIL HEIGHT

GR-2A
(3'-1½" POST SPACING)
MAX DYNAMIC DEFLECTION = 2'

GR-2
(6'-3" POST SPACING)
MAX DYNAMIC DEFLECTION = 3'

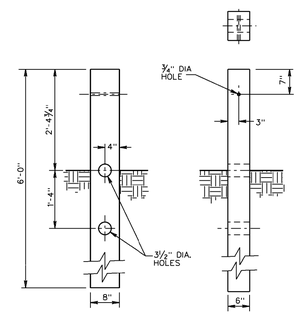

CRT POST

NOTES:

GUARDRAIL LOCATIONS SHOWN ON PLANS ARE APPROXIMATE ONLY AND CAN BE ADJUSTED DURING CONSTRUCTION IF AND AS DIRECTED BY THE ENGINEER.

FOR DETAILS OF POST AND BLOCKOUTS SEE SHEET NO. 501.05.

FOR DETAILS OF RAIL ELEMENT, RAIL SPLICE JOINT, AND ASSOCIATED HARDWARE SEE SHEET NOS. 501.01 AND 501.02.

RAIL ELEMENTS ARE FURNISHED SHOP CURVED FOR RADII BETWEEN 5 FEET AND 150 FEET.

ALL GUARDRAIL POSTS SHALL BE SET PLUMB. POST SHALL NOT BE SET WITH A VARIATION OF MORE THAN ⅛" PER FOOT FROM VERTICAL. W-BEAM, BLOCKOUTS, AND POSTS SHALL BE SET AND ALIGNED WITHOUT ALTERATION OR FORCE, AS PER SECTION 505 OF THE SPECIFICATIONS.

ALL GR-2 AND GR-2A RAIL SHALL BE MAINTAINED AT A HEIGHT OF 27¾" MIN - 28¾" MAX AS MEASURED PER STANDARD GR-INS.

ALL W-BEAM RAILS SHALL BE LAPPED IN THE DIRECTION OF VEHICULAR TRAVEL FOR THE FINISHED ROADWAY.

VDOT ROAD AND BRIDGE STANDARDS			SPECIFICATION REFERENCE
SHEET 1 OF 2 501.04	REVISION DATE 7/11	**STANDARD BLOCKED-OUT W-BEAM GUARDRAIL (STRONG POST SYSTEM)** VIRGINIA DEPARTMENT OF TRANSPORTATION	221 505

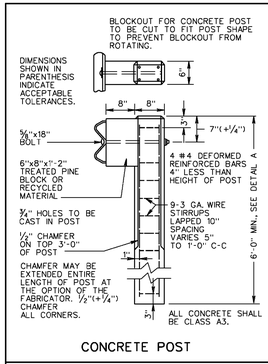

CONCRETE POST

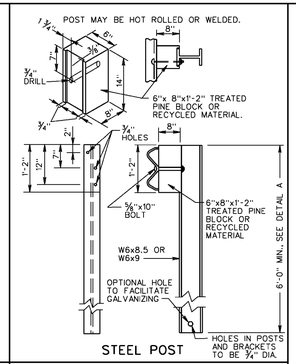

STEEL POST

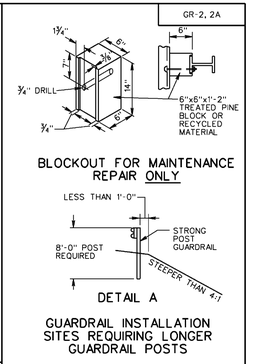

BLOCKOUT FOR MAINTENANCE REPAIR ONLY

DETAIL A

GUARDRAIL INSTALLATION SITES REQUIRING LONGER GUARDRAIL POSTS

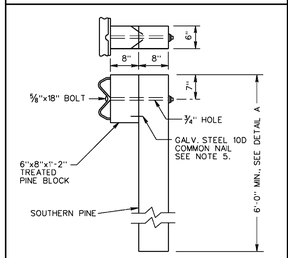

6x8 WOOD POST

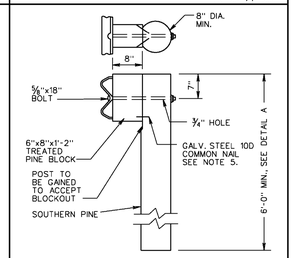

ROUND WOOD POST

NOTES:

1. ALL BOLTS, NUTS, WASHERS, AND OTHER STEEL ITEMS ARE TO BE GALVANIZED.
2. ALTERNATE TYPE POSTS AND BLOCKOUT MAY BE INTERCHANGED ON ANY ONE PROJECT WITH THE RESTRICTION THAT THE SAME TYPE OF POST AND BLOCKOUT MUST BE USED IN ANY SINGLE RUN OF GUARDRAIL.
3. FOR DETAILS OF GUARDRAIL ELEMENT SPLICE JOINT, HARDWARE, ETC. SEE SHEET NOS. 501.01 AND 501.02.
4. THE GUARDRAIL AND MEDIAN BARRIER COMPONENTS DEPICTED IN A.R.T.B.A. TECHNICAL BULLETIN NUMBER 268B MAY BE SUBSTITUTED IF INTERCHANGEABLE WITH THE STANDARDS FOR GUARDRAIL (GR) OR MEDIAN BARRIER (MB) AND APPROVED BY THE ENGINEER.
5. DRIVE NAIL ON BOTH SIDES WITHIN 2" OF THE TOP OR BOTTOM OF BLOCKOUT AFTER ⅝" x 18 BOLT IS INSTALLED.

SPECIFICATION REFERENCE		VDOT ROAD AND BRIDGE STANDARDS	
221 236 505	**STANDARD BLOCKED-OUT W-BEAM GUARDRAIL (STRONG POST SYSTEM, POST AND BLOCKOUT DETAILS)** VIRGINIA DEPARTMENT OF TRANSPORTATION	REVISION DATE 7/11	SHEET 2 OF 2 501.05

GR-FOA-1

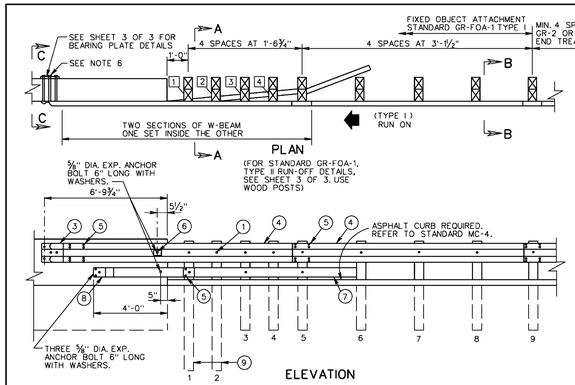

NOTES:

1. FIXED OBJECTS MAY CONSIST OF BRIDGE RAILS, ABUTMENTS, PIERS, RETAINING WALLS, OR OTHER FLAT SURFACED STRUCTURES WITH VERTICAL FACE.
2. BRIDGE RAIL ENDS AND BRIDGE PARAPETS MUST BE OF ADEQUATE STRENGTH TO ACCEPT FULL IMPACT LOADING.
3. GUARDRAIL COMPONENTS SHALL BE IN ACCORDANCE WITH VDOT ROAD AND BRIDGE STANDARDS.
4. POSTS 1, 2, 3, 4, AND 5 REQUIRE AN ADDITIONAL HOLE TO ATTACH BLOCKS AND/OR RUBRAIL. RUBRAIL IS NOT BOLTED TO POSTS 2 AND 4.
5. BOTTOM WOOD BLOCKS LOCATED ON POSTS 1 THROUGH 4 ARE CENTER DRILLED AND SECURED WITH ⅝" CARRIAGE BOLTS (LENGTH AS REQUIRED).
6. APPROPRIATE LENGTH ⅞" DIAMETER ASTM A325 HEX BOLTS WITH WASHERS MUST BE USED WITH THRU DRILLED HOLES WITH A ⅝" BEARING PLATE ON THE BACK SIDE OF THE BRIDGE PARAPET OR TERMINAL WALL.
7. DRIVE NAIL WITHIN 2" OF THE TOP OR BOTTOM OF THE BLOCKOUT AFTER ⅝" X 18 BOLT IS INSTALLED.
8. SEE SHEET 3 OF 3 FOR RUBRAIL BLOCKOUT DETAILS.

NEW BRIDGES - ATTACHMENTS
ONE WAY TRAFFIC - RUN-ON, 2-GR-FOA-1, TYPE I
- RUN-OFF, 2-GR-FOA-1, TYPE II
TWO WAY TRAFFIC - RUN-ON, 4-GR-FOA-1, TYPE I
EXISTING BRIDGE ATTACHMENTS AS SHOWN ON PLANS.

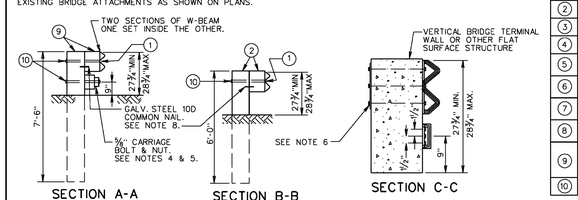

ITEM	MATERIAL/SPECIFICATIONS/NOTES
1	⅝" X 18" LONG. GUARDRAIL BOLT AND RECESSED NUT.
2	STANDARD 6" x 8" WOOD POST AND BLOCK
3	STANDARD W-BEAM TERMINAL CONNECTOR
4	STANDARD W-BEAM RAIL
5	⅝" X 2" LONG GUARDRAIL BOLT & RECESSED NUT (SEE ST'D. GR-HDW)
6	RECTANGULAR PLATE WASHER (SEE STD. GR-HDW)
7	BENT PLATE RUBRAIL (SEE SHEET 3 OF 3)
8	C6 X 8.2 RUBRAIL (SEE SHEET 3 OF 3)
9	8" X 8" X 7'-6" LONG WOOD POST & 8" X 8" X 14" LONG TREATED PINE BLOCK OR RECYCLED MATERIAL
10	WASHER FOR ⅝" BOLT

SPECIFICATION REFERENCE		VDOT ROAD AND BRIDGE STANDARDS	
505	**W-BEAM GUARDRAIL - FIXED OBJECT ATTACHMENT FOR USE BETWEEN VERTICAL FIXED OBJECTS AND GUARDRAIL (WOOD POSTS)** VIRGINIA DEPARTMENT OF TRANSPORTATION	REVISION DATE 7/11	SHEET 1 OF 3 501.25

PROJECT	SHEET NO.
U000-118-204	2G(3)

SUPERVISED BY CITY OF LYNCHBURG
PROJECT MANAGER STEVE CAMPBELL, MATTERN & CRAIG (540)-345-9342
SURVEYED BY MATTERN & CRAIG (540)-345-9342
DESIGNED BY MIKE AGEE, MATTERN & CRAIG

REVISED	STATE	ROUTE	PROJECT	SHEET NO.
	VA.	29	U000-118-204, C-501	2G(4)

DESIGN FEATURES RELATING TO CONSTRUCTION OR TO REGULATION AND CONTROL OF TRAFFIC MAY BE SUBJECT TO CHANGE AS DEEMED NECESSARY BY THE DEPARTMENT

GR-FOA-1

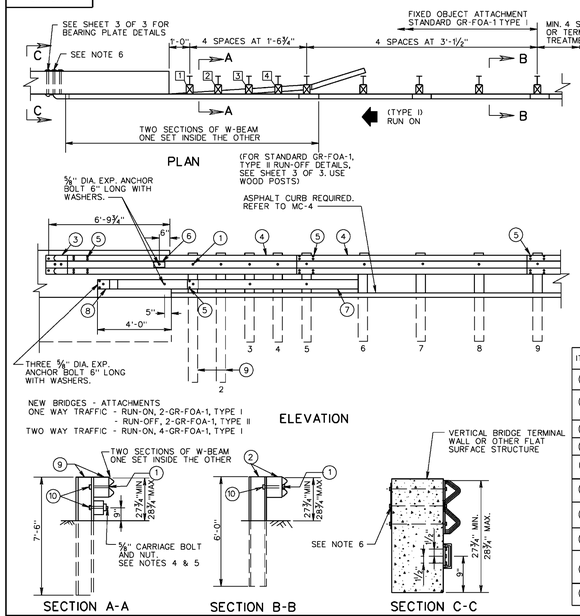

NOTES:

1. FIXED OBJECTS MAY CONSIST OF BRIDGE RAILS, ABUTMENTS, PIERS, RETAINING WALLS, OR OTHER FLAT SURFACED STRUCTURES WITH VERTICAL FACE.
2. BRIDGE RAIL ENDS AND BRIDGE PARAPETS MUST BE OF ADEQUATE STRENGTH TO ACCEPT FULL IMPACT LOADING.
3. GUARDRAIL COMPONENTS SHALL BE IN ACCORDANCE WITH VDOT ROAD AND BRIDGE STANDARDS.
4. POSTS 1, 2, 3, 4, AND 5 REQUIRE AN ADDITIONAL HOLE TO ATTACH BLOCKS AND/OR RUBRAIL. RUBRAIL IS NOT BOLTED TO POSTS 2 AND 4.
5. BOTTOM WOOD BLOCKS LOCATED ON POSTS 1 THROUGH 4 ARE CENTER DRILLED AND SECURED WITH ⅝" CARRIAGE BOLTS (LENGTH AS REQUIRED).
6. APROPRIATE LENGTH ⅞" DIAMETER ASTM A325 HEX BOLTS WITH WASHERS MUST BE USED WITH THRU DRILLED HOLES WITH A ⅝" BEARING PLATE ON THE BACK SIDE OF THE BRIDGE PARAPET OR TERMINAL WALL.
7. SEE SHEET 3 OF 3 FOR RUBRAIL BLOCKOUT DETAILS.

ITEM	MATERIAL/SPECIFICATIONS/NOTES
1	⅝" X 10" LONG HEX BOLT WITH NUT
2	ST'D. W6X8.5 OR W6X9 STEEL POST ST'D. 6X8X14" LG. TREATED PINE BLOCK OR RECYCLED MATERIAL
3	STANDARD W-BEAM TERMINAL CONNECTOR
4	STANDARD W-BEAM RAIL
5	⅝" X 2" LONG GUARDRAIL BOLT & RECESSED NUT (SEE STANDARD GR-HDW)
6	RECTANGULAR PLATE WASHER (SEE ST'D. GR-HDW)
7	BENT PLATE RUBRAIL (SEE SHEET 3 OF 3)
8	C6 X 8.2 RUBRAIL (SEE SHEET 3 OF 3)
9	W8 X 13 X 7'-6" LONG STEEL POST WITH STANDARD 6" X 8" X 14" LONG TREATED PINE BLOCK OR RECYCLED MATERIAL
10	WASHER FOR ⅝" BOLT

VDOT ROAD AND BRIDGE STANDARDS

W-BEAM GUARDRAIL-FIXED OBJECT ATTACHMENT

FOR USE BETWEEN VERTICAL FIXED OBJECTS AND GUARDRAIL (STEEL POSTS)

VIRGINIA DEPARTMENT OF TRANSPORTATION

SHEET	REVISION DATE	SPECIFICATION REFERENCE
2 OF 3	7/11	505
501.26		

MB-3

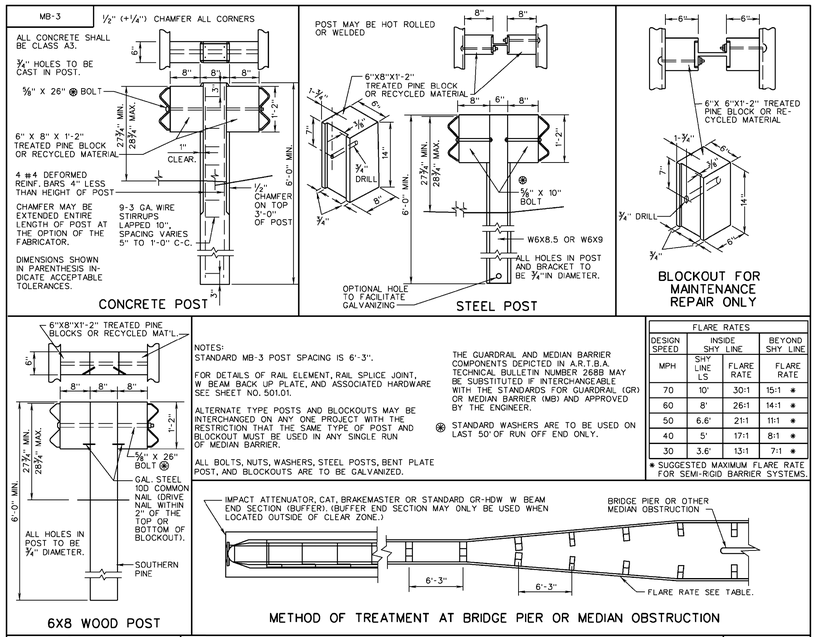

NOTES:
STANDARD MB-3 POST SPACING IS 6'-3".

FOR DETAILS OF RAIL ELEMENT, RAIL SPLICE JOINT, W BEAM BACK UP PLATE, AND ASSOCIATED HARDWARE SEE SHEET NO. 501.01.

ALTERNATE TYPE POSTS AND BLOCKOUTS MAY BE INTERCHANGED ON ANY ONE PROJECT WITH THE RESTRICTION THAT THE SAME TYPE OF POST AND BLOCKOUT MUST BE USED IN ANY SINGLE RUN OF MEDIAN BARRIER.

ALL BOLTS, NUTS, WASHERS, STEEL POSTS, BENT PLATE POST, AND BLOCKOUTS ARE TO BE GALVANIZED.

THE GUARDRAIL AND MEDIAN BARRIER COMPONENTS DEPICTED IN A.R.T.B.A. TECHNICAL BULLETIN NUMBER 2688 MAY BE SUBSTITUTED IF INTERCHANGEABLE WITH THE STANDARDS FOR GUARDRAIL (GR) OR MEDIAN BARRIER (MB) AND APPROVED BY THE ENGINEER.

⊛ STANDARD WASHERS ARE TO BE USED ON LAST 50' OF RUN OFF END ONLY.

FLARE RATES

DESIGN SPEED	INSIDE SHY LINE		BEYOND SHY LINE
MPH	SHY LINE LS	FLARE RATE	FLARE RATE
70	10'	30:1	15:1 *
60	8'	26:1	14:1 *
50	6.6'	21:1	11:1 *
40	5'	17:1	8:1 *
30	3.6'	13:1	7:1 *

* SUGGESTED MAXIMUM FLARE RATE FOR SEMI-RIGID BARRIER SYSTEMS.

VDOT ROAD AND BRIDGE STANDARDS

BLOCKED-OUT W-BEAM MEDIAN BARRIER

VIRGINIA DEPARTMENT OF TRANSPORTATION

SHEET	REVISION DATE	SPECIFICATION REFERENCE
1 OF 1	7/11	221 505
502.01		

PF-8

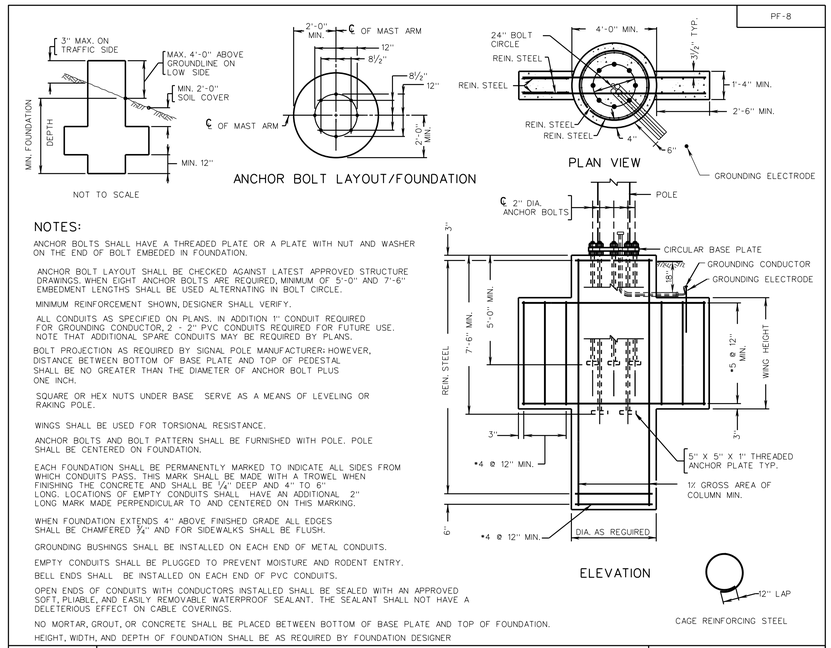

NOTES:

ANCHOR BOLTS SHALL HAVE A THREADED PLATE OR A PLATE WITH NUT AND WASHER ON THE END OF BOLT EMBEDED IN FOUNDATION.

ANCHOR BOLT LAYOUT SHALL BE CHECKED AGAINST LATEST APPROVED STRUCTURE DRAWINGS. WHEN EIGHT ANCHOR BOLTS ARE REQUIRED, MINIMUM OF 5'-0" AND 7'-6" EMBEDMENT LENGTHS SHALL BE USED ALTERNATING IN BOLT CIRCLE.

MINIMUM REINFORCEMENT SHOWN, DESIGNER SHALL VERIFY.

ALL CONDUITS AS SPECIFIED ON PLANS. IN ADDITION 1" CONDUIT REQUIRED FOR GROUNDING CONDUCTOR, 2 - 2" PVC CONDUITS REQUIRED FOR FUTURE USE. NOTE THAT ADDITIONAL SPARE CONDUITS MAY BE REQUIRED BY PLANS.

BOLT PROJECTION AS REQUIRED BY SIGNAL POLE MANUFACTURER; HOWEVER, DISTANCE BETWEEN BOTTOM OF BASE PLATE AND TOP OF PEDESTAL SHALL BE NO GREATER THAN THE DIAMETER OF ANCHOR BOLT PLUS ONE INCH.

SQUARE OR HEX NUTS UNDER BASE SERVE AS A MEANS OF LEVELING OR RAKING POLE.

WINGS SHALL BE USED FOR TORSIONAL RESISTANCE.

ANCHOR BOLTS AND BOLT PATTERN SHALL BE FURNISHED WITH POLE. POLE SHALL BE CENTERED ON FOUNDATION.

EACH FOUNDATION SHALL BE PERMANENTLY MARKED TO INDICATE ALL SIDES FROM WHICH CONDUITS PASS. THIS MARK SHALL BE MADE WITH A TROWEL WHEN FINISHING THE CONCRETE AND SHALL BE ¼" DEEP AND 4" TO 6" LONG. LOCATIONS OF EMPTY CONDUITS SHALL HAVE AN ADDITIONAL 2" LONG MARK MADE PERPENDICULAR TO AND CENTERED ON THIS MARKING.

WHEN FOUNDATION EXTENDS 4" ABOVE FINISHED GRADE ALL EDGES SHALL BE CHAMFERED ¾" AND FOR SIDEWALKS SHALL BE FLUSH.

GROUNDING BUSHINGS SHALL BE INSTALLED ON EACH END OF METAL CONDUITS.

EMPTY CONDUITS SHALL BE PLUGGED TO PREVENT MOISTURE AND RODENT ENTRY.

BELL ENDS SHALL BE INSTALLED ON EACH END OF PVC CONDUITS.

OPEN ENDS OF CONDUITS WITH CONDUCTORS INSTALLED SHALL BE SEALED WITH AN APPROVED SOFT, PLIABLE, AND EASILY REMOVABLE WATERPROOF SEALANT. THE SEALANT SHALL NOT HAVE A DELETERIOUS EFFECT ON CABLE COVERINGS.

NO MORTAR, GROUT, OR CONCRETE SHALL BE PLACED BETWEEN BOTTOM OF BASE PLATE AND TOP OF FOUNDATION.

HEIGHT, WIDTH, AND DEPTH OF FOUNDATION SHALL BE AS REQUIRED BY FOUNDATION DESIGNER

SPECIFICATION REFERENCE
700

SIGNAL POLE FOUNDATION

INSTALLATION DETAILS

VIRGINIA DEPARTMENT OF TRANSPORTATION

VDOT ROAD AND BRIDGE STANDARDS

REVISION DATE	SHEET _1_ OF _1_
NEW 04/09 06/15/2009	_1310.11_

CF-1

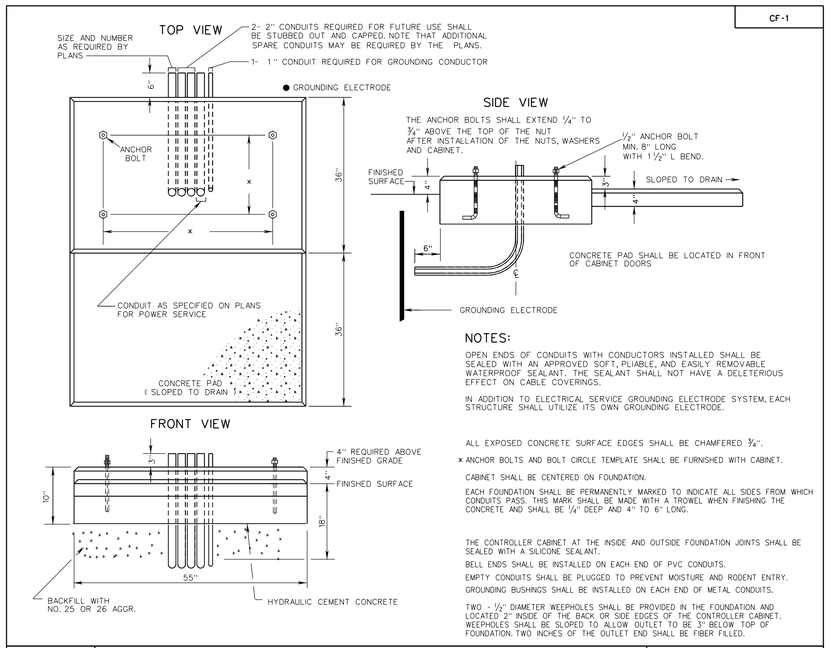

NOTES:

OPEN ENDS OF CONDUITS WITH CONDUCTORS INSTALLED SHALL BE SEALED WITH AN APPROVED SOFT, PLIABLE, AND EASILY REMOVABLE WATERPROOF SEALANT. THE SEALANT SHALL NOT HAVE A DELETERIOUS EFFECT ON CABLE COVERINGS.

IN ADDITION TO ELECTRICAL SERVICE GROUNDING ELECTRODE SYSTEM, EACH STRUCTURE SHALL UTILIZE ITS OWN GROUNDING ELECTRODE.

ALL EXPOSED CONCRETE SURFACE EDGES SHALL BE CHAMFERED ¾".

× ANCHOR BOLTS AND BOLT CIRCLE TEMPLATE SHALL BE FURNISHED WITH CABINET.

CABINET SHALL BE CENTERED ON FOUNDATION.

EACH FOUNDATION SHALL BE PERMANENTLY MARKED TO INDICATE ALL SIDES FROM WHICH CONDUITS PASS. THIS MARK SHALL BE MADE WITH A TROWEL WHEN FINISHING THE CONCRETE AND SHALL BE ¼" DEEP AND 4" TO 6" LONG.

THE CONTROLLER CABINET AT THE INSIDE AND OUTSIDE FOUNDATION JOINTS SHALL BE SEALED WITH A SILICONE SEALANT.

BELL ENDS SHALL BE INSTALLED ON EACH END OF PVC CONDUITS.

EMPTY CONDUITS SHALL BE PLUGGED TO PREVENT MOISTURE AND RODENT ENTRY.

GROUNDING BUSHINGS SHALL BE INSTALLED ON EACH END OF METAL CONDUITS.

TWO - ½" DIAMETER WEEPHOLES SHALL BE PROVIDED IN THE FOUNDATION AND LOCATED 2" INSIDE OF THE BACK OR SIDE EDGES OF THE CONTROLLER CABINET. WEEPHOLES SHALL BE SLOPED TO ALLOW OUTLET TO BE 3" BELOW TOP OF FOUNDATION. TWO INCHES OF THE OUTLET END SHALL BE FIBER FILLED.

SPECIFICATION REFERENCE
700

CONTROLLER CABINET FOUNDATION

CABINET PLACEMENT DETAILS

VIRGINIA DEPARTMENT OF TRANSPORTATION

VDOT ROAD AND BRIDGE STANDARDS

REVISION DATE	SHEET 1 OF 1
06-15-2009	1301.10

PROJECT	SHEET NO.
U000-118-204	2G(4)

SUPERVISED BY CITY OF LYNCHBURG
PROJECT MANAGER STEVE CAMPBELL, MATTERN & CRAIG (540)-345-9342
SURVEYED BY MATTERN & CRAIG (540)-345-9342
DESIGNED BY MIKE AGEE, MATTERN & CRAIG

DESIGN FEATURES RELATING TO CONSTRUCTION OR TO REGULATION AND CONTROL OF TRAFFIC MAY BE SUBJECT TO CHANGE AS DEEMED NECESSARY BY THE DEPARTMENT

REVISED	STATE	FEDERAL AID PROJECT	STATE ROUTE	STATE PROJECT	SHEET NO.
	VA.		29	U000-118-204, C-501	2G(5)

MP-1

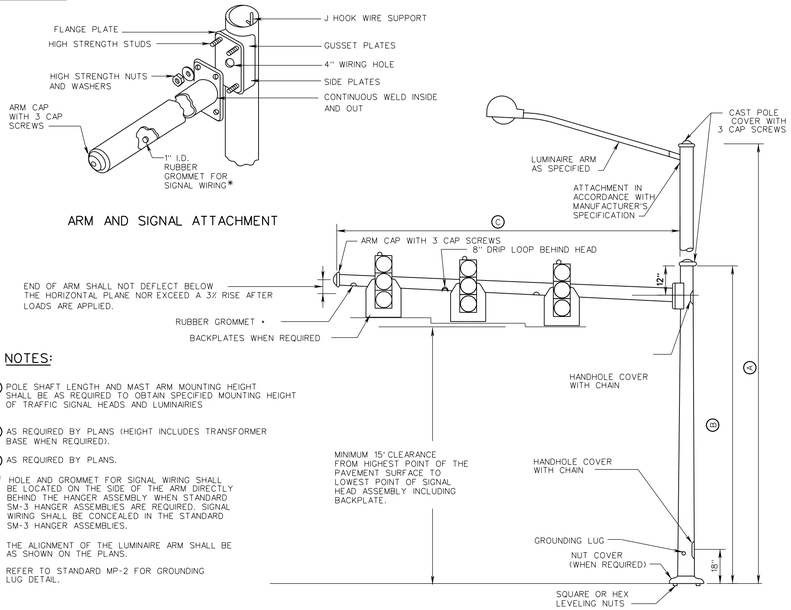

NOTES:

(A) POLE SHAFT LENGTH AND MAST ARM MOUNTING HEIGHT SHALL BE AS REQUIRED TO OBTAIN SPECIFIED MOUNTING HEIGHT OF TRAFFIC SIGNAL HEADS AND LUMINAIRIES

(B) AS REQUIRED BY PLANS (HEIGHT INCLUDES TRANSFORMER BASE WHEN REQUIRED).

(C) AS REQUIRED BY PLANS.

* HOLE AND GROMMET FOR SIGNAL WIRING SHALL BE LOCATED ON THE SIDE OF THE ARM DIRECTLY BEHIND THE HANGER ASSEMBLY WHEN STANDARD SM-3 HANGER ASSEMBLIES ARE REQUIRED. SIGNAL WIRING SHALL BE CONCEALED IN THE STANDARD SM-3 HANGER ASSEMBLIES.

THE ALIGNMENT OF THE LUMINAIRE ARM SHALL BE AS SHOWN ON THE PLANS.

REFER TO STANDARD MP-2 FOR GROUNDING LUG DETAIL.

VDOT ROAD AND BRIDGE STANDARDS		SIGNAL POLE DETAILS	SPECIFICATION REFERENCE
SHEET 1 OF 1	REVISION DATE	MAST ARM AND COMBINATION LUMINAIRE MAST ARM POLE	700
1302.10	06-15-2009	VIRGINIA DEPARTMENT OF TRANSPORTATION	

SMD-1,2

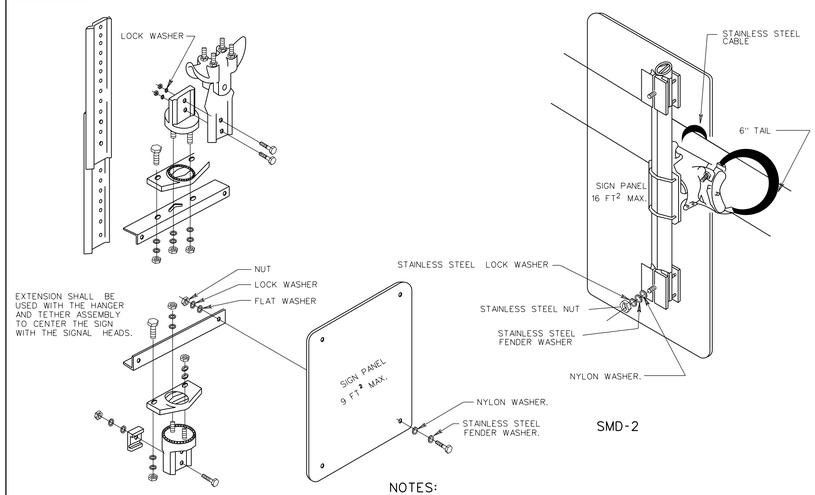

NOTES:

NUTS AND BOLTS USED FOR ATTACHMENT OF SIGN PANEL SHALL BE STAINLESS STEEL AND ¾" IN DIAMETER.

A 1¼" NYLON AND STAINLESS STEEL FENDER WASHER SHALL BE USED ON THE FRONT OF SIGN PANEL WHERE BOLT PASSES THROUGH SIGN PANEL.

ALL NUTS, BOLTS AND WASHERS SHALL BE STAINLESS STEEL OR GALVANIZED STEEL UNLESS OTHERWISE INDICATED

SPACERS SHALL BE INSTALLED BETWEEN THE EYELET OF THE SIGN HANGAR AND THE SPAN WIRE CLAMP TO ELIMINATE ANY GAP.

VDOT ROAD AND BRIDGE STANDARDS		SIGN MOUNTING DETAILS	SPECIFICATION REFERENCE
SHEET 1 OF 1	REVISION DATE	VIRGINIA DEPARTMENT OF TRANSPORTATION	703
1305.10	06-15-2009		

LF-1

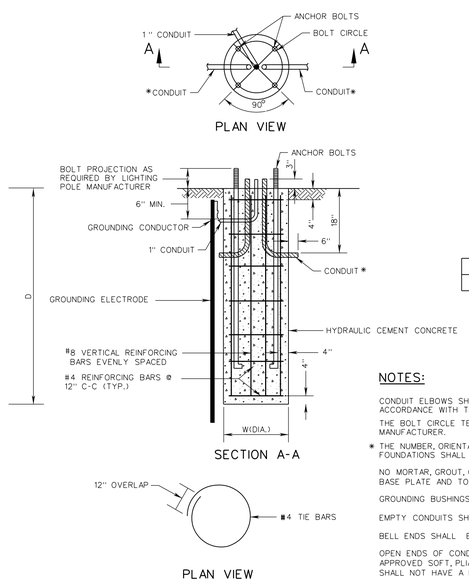

TYPE	W	D	VERTICAL BARS
A	2'-6"	8'	8 - #8

NOTES:

CONDUIT ELBOWS SHALL HAVE A 90° BEND. THE BEND RADIUS SHALL BE IN ACCORDANCE WITH THE N.E.C.

THE BOLT CIRCLE TEMPLATE SHALL BE FURNISHED BY THE LIGHTING POLE MANUFACTURER.

* THE NUMBER, ORIENTATION AND SIZE OF CONDUITS ENTERING AND EXITING FOUNDATIONS SHALL BE AS SHOWN ON THE PLANS.

NO MORTAR, GROUT, OR CONCRETE SHALL BE PLACED BETWEEN BOTTOM OF BASE PLATE AND TOP OF FOUNDATION.

GROUNDING BUSHINGS SHALL BE INSTALLED ON EACH END OF METAL CONDUITS.

EMPTY CONDUITS SHALL BE PLUGGED TO PREVENT MOISTURE AND RODENT ENTRY.

BELL ENDS SHALL BE INSTALLED ON EACH END OF PVC CONDUITS.

OPEN ENDS OF CONDUITS WITH CONDUCTORS INSTALLED SHALL BE SEALED WITH AN APPROVED SOFT, PLIABLE, AND EASILY REMOVABLE WATERPROOF SEALANT. THE SEALANT SHALL NOT HAVE A DELETERIOUS EFFECT ON CABLE COVERINGS.

SPECIFICATION REFERENCE	LIGHTING POLE FOUNDATION	VDOT ROAD AND BRIDGE STANDARDS	
700	INSTALLATION DETAILS	REVISION DATE	SHEET 1 OF 1
	VIRGINIA DEPARTMENT OF TRANSPORTATION	06-15-2009	1310.20

ECI-1

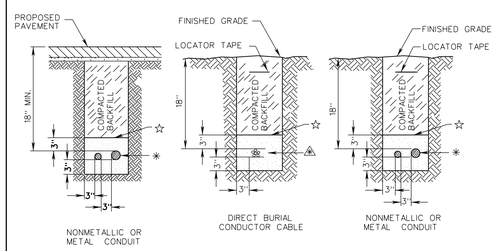

NON - PAVEMENT AND PROPOSED PAVEMENT AREA INSTALLATION

ECI-2

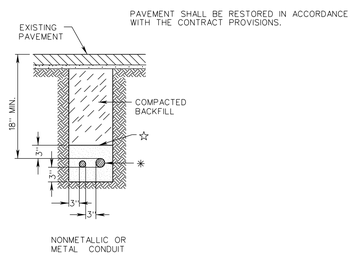

EXISTING PAVEMENT AREA INSTALLATION

NOTES:

CONTRACTOR SHALL INSTALL A 4" MINIMUM TO 6" MAXIMUM WIDE RED PLASTIC LOCATOR TAPE 6" TO 8" BELOW FINISHED GRADE AND DIRECTLY ABOVE BURIED CONDUIT OR CONDUCTOR CABLES, EXCEPT UNDER PAVEMENT.

CONDUIT INSTALLED UNDER EXISTING OR PROPOSED ROADWAYS FOR DIRECT BURIED CABLES SHALL EXTEND 24" BEYONDTHE PAVED SURFACE AND/OR SIDEWALK.

WHERE CONDUIT FOR POWER AND CONDUIT FOR COMMUNICATION ARE TO BE INSTALLED IN CLOSE PROXIMITY TO EACH OTHER, CONDUITS SHALL BE PLACED PARALLEL IN A COMMON TRENCH WITH NO LESS THAN 6" OF SEPARATION SEPARATION BETWEEN CONDUIT SYSTEMS.

☆ BACKFILL MATERIAL BELOW THIS LEVEL SHALL BE SANDY FILL (FREE OF ANY STONES, CINDERS, WOOD, ROOTS, DEBRIS, ETC.)

✳ ONE OR MORE CONDUITS AS REQUIRED.

(A) ONE OR MORE CONDUCTOR CABLES AS REQUIRED.

OFFSETTING OF CONDUIT MAY BE USED FOR TIEING INTO EXISTING CONDUIT SYSTEMS OR BYPASSING OBSTRUCTIONS AS DIRECTED BY THE ENGINEER.

WHEN OFFSETTING CONDUIT TO BYPASS AN OBSTRUCTION, THE CONDUIT SHALL MAINTAIN A MINIMUM CLEARANCE OF 12" FROM THE CLOSEST POINT OF THE OBSTRUCTION.

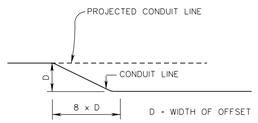

METHOD OF OFFSETTING CONDUIT

VDOT ROAD AND BRIDGE STANDARDS		ELECTRICAL CONDUIT AND CONDUCTOR CABLE	SPECIFICATION REFERENCE
SHEET 1 OF 1	REVISION DATE	UNDERGROUND INSTALLATION	700
1318.10	06-15-2009	VIRGINIA DEPARTMENT OF TRANSPORTATION	

PLAN NO.	PROJECT	FILE NO.	SHEET NO.
	U000-118-204		2G(5)

SUPERVISED BY CITY OF LYNCHBURG
PROJECT MANAGER STEVE CAMPBELL, MATTERN & CRAIG (540)-345-9342
SURVEYED BY MATTERN & CRAIG (540)-345-9342
DESIGNED BY MIKE AGEE, MATTERN & CRAIG

DESIGN FEATURES RELATING TO CONSTRUCTION OR TO REGULATION AND CONTROL OF TRAFFIC MAY BE SUBJECT TO CHANGE AS DEEMED NECESSARY BY THE DEPARTMENT

REVISED	STATE	FEDERAL AID PROJECT	STATE ROUTE	STATE PROJECT	SHEET NO.
	VA.		29	U000-118-204, C-501	2G(6)

STP-1

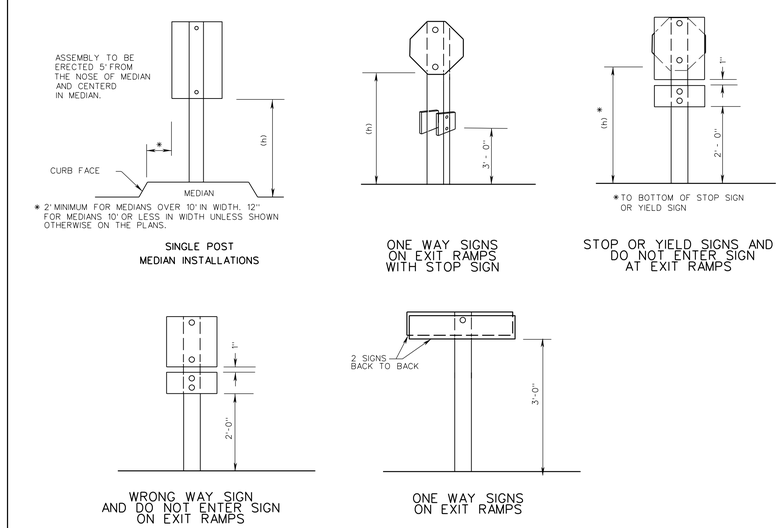

SPECIFICATION REFERENCE	SQUARE TUBE SIGN POST	VDOT ROAD AND BRIDGE STANDARDS
700	VIRGINIA DEPARTMENT OF TRANSPORTATION	REVISION DATE 6-15-09 / SHEET 3 OF 3 / 1321.12

SSP-VA

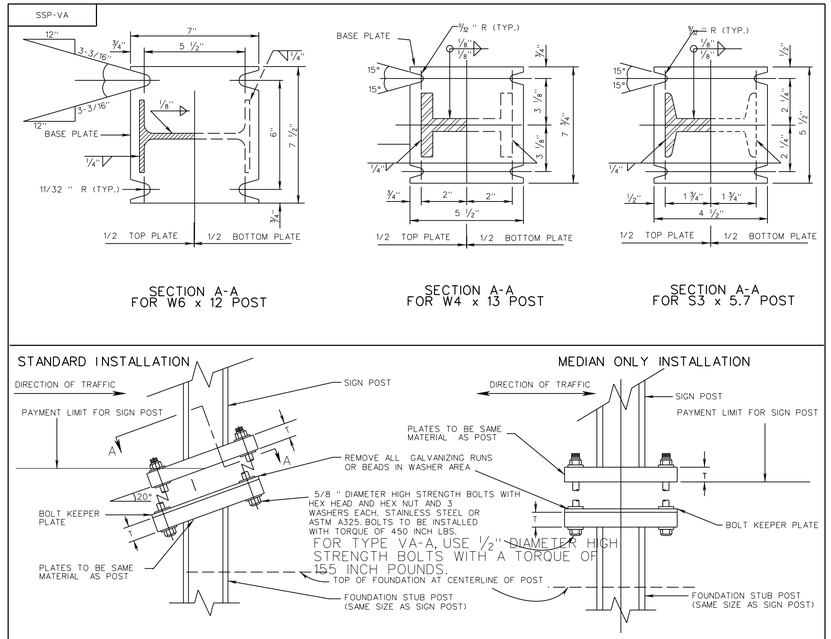

VDOT ROAD AND BRIDGE STANDARDS	VA SIGN STRUCTURE INSTALLATION DETAILS	SPECIFICATION REFERENCE
SHEET 3 OF 4 / 1322.12 / REVISION DATE 6-15-09	VIRGINIA DEPARTMENT OF TRANSPORTATION	700

OSS-1

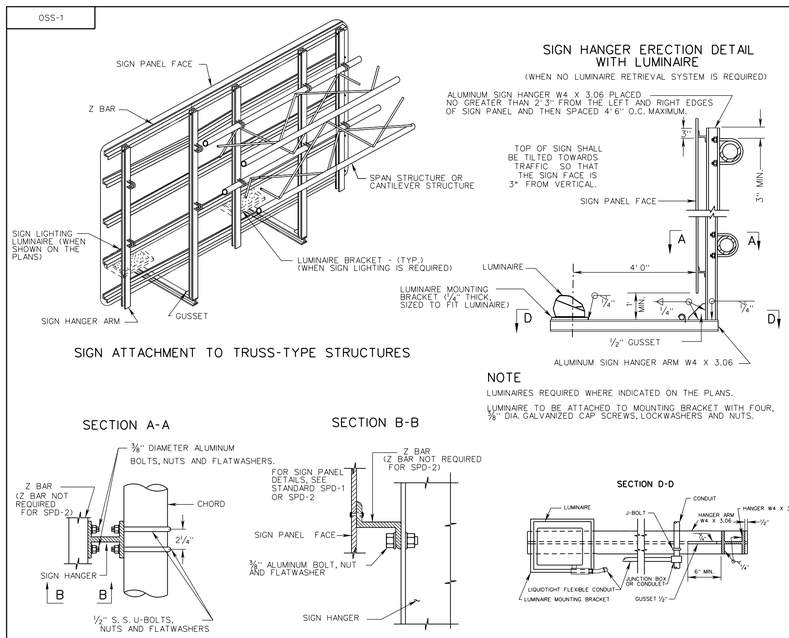

VDOT ROAD AND BRIDGE STANDARDS	OVERHEAD SIGN STRUCTURE HANGER AND LUMINAIRE DETAIL	SPECIFICATION REFERENCE
SHEET 2 OF 2 / 1324.16 / REVISION DATE 6-15-09	VIRGINIA DEPARTMENT OF TRANSPORTATION	700

SPD-5

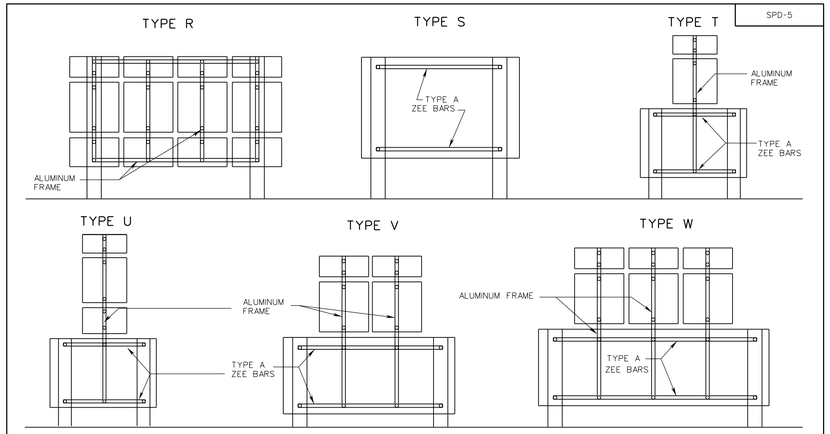

ALUMINUM FRAMING

SIGN PANEL ATTACHMENT DETAILS
(FOR SIGN PANEL ATTACHMENT TO Z BARS, SEE STANDARD SPD-1)

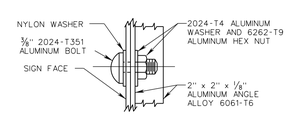

NOTES

NYLON WASHER SHALL BE 1/4" THICK MINIMUM WITH AN OUTSIDE DIAMETER OF 1" AND AN INSIDE DIAMETER OF 7/16".

TO OBTAIN A FLUSH MOUNTING SURFACE FOR SIGNS, ALL WOOD POST SHALL BE MORTISED WHERE NECESSARY TO RECESS THE FLANGE OF ALUMINUM ANGLE.

THE TYPE A ZEE BARS SHALL BE 2 7/8" X 1 1/4" X 3/16".

ALL VERTICAL AND HORIZONTAL SPACING BETWEEN SIGNS IN AN ASSEMBLY SHALL BE ONE INCH UNLESS SPECIFIED.

THESE ARE TYPICAL SIGN PANEL ASSEMBLIES: ALL ASSEMBLIES SHALL BE IN ACCORDANCE WITH PLAN DETAILS.

SPECIFICATION REFERENCE	SIGN PANEL DESIGN	VDOT ROAD AND BRIDGE STANDARDS
701	VIRGINIA DEPARTMENT OF TRANSPORTATION	REVISION DATE 6-15-09 / SHEET 2 OF 2 / 1325.51

PLAN NO.	PROJECT	FILE NO.	SHEET NO.
	U000-118-204		2G(6)

SUPERVISED BY CITY OF LYNCHBURG
PROJECT MANAGER STEVE CAMPBELL, MATTERN & CRAIG (540)-345-9342
SURVEYED BY MATTERN & CRAIG (540)-345-9342
DESIGNED BY MIKE AGEE, MATTERN & CRAIG

SPD-6

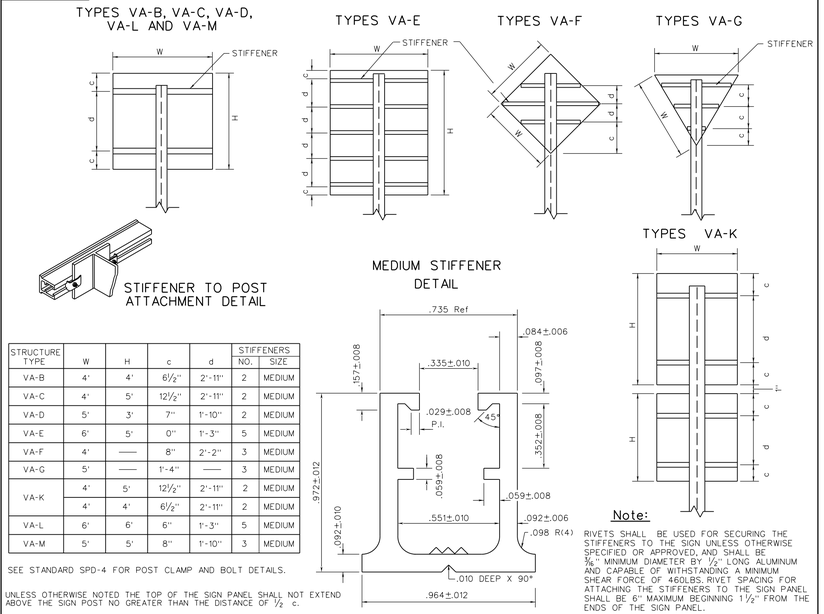

STRUCTURE TYPE	W	H	c	d	STIFFENERS NO.	STIFFENERS SIZE
VA-B	4'	4'	6½"	2'-11"	2	MEDIUM
VA-C	4'	5'	12½"	2'-11"	2	MEDIUM
VA-D	5'	3'	7"	1'-10"	2	MEDIUM
VA-E	6'	5'	0"	1'-3"	5	MEDIUM
VA-F	4'	——	8"	2'-2"	3	MEDIUM
VA-G	5'	——	1'-4"	——	3	MEDIUM
VA-K	4'	5'	12½"	2'-11"	2	MEDIUM
	4'	4'	6½"	2'-11"	2	MEDIUM
VA-L	6'	6'	6"	1'-3"	5	MEDIUM
VA-M	5'	5'	8"	1'-10"	3	MEDIUM

SEE STANDARD SPD-4 FOR POST CLAMP AND BOLT DETAILS.

UNLESS OTHERWISE NOTED THE TOP OF THE SIGN PANEL SHALL NOT EXTEND ABOVE THE SIGN POST NO GREATER THAN THE DISTANCE OF ½ c.

Note:

RIVETS SHALL BE USED FOR SECURING THE STIFFENERS TO THE SIGN UNLESS OTHERWISE SPECIFIED OR APPROVED, AND SHALL BE ⅜" MINIMUM DIAMETER BY ½" LONG ALUMINUM AND CAPABLE OF WITHSTANDING A MINIMUM SHEAR FORCE OF 460LBS. RIVET SPACING FOR ATTACHING THE STIFFENERS TO THE SIGN PANEL SHALL BE 6" MAXIMUM BEGINNING 1½" FROM THE ENDS OF THE SIGN PANEL.

VDOT ROAD AND BRIDGE STANDARDS		SIGN PANEL DESIGN	SPECIFICATION REFERENCE
SHEET 1 OF 1	REVISION DATE 6-15-09	VIRGINIA DEPARTMENT OF TRANSPORTATION	701
1325.60			

DESIGN FEATURES RELATING TO CONSTRUCTION OR TO REGULATION AND CONTROL OF TRAFFIC MAY BE SUBJECT TO CHANGE AS DEEMED NECESSARY BY THE DEPARTMENT

REVISED	STATE	FEDERAL AID PROJECT	STATE ROUTE	STATE PROJECT	SHEET NO.
	VA.		29	U000-118-204, C-501	2G(7)

PLAN NO.	PROJECT	FILE NO.	SHEET NO.
	U000-118-204		2G(7)

SUPERVISED BY CITY OF LYNCHBURG
PROJECT MANAGER STEVE CAMPBELL, MATTERN & CRAIG (540)-345-9342
SURVEYED BY MATTERN & CRAIG (540)-345-9342
DESIGNED BY MIKE AGEE, MATTERN & CRAIG

REVISED	STATE	ROUTE	PROJECT	SHEET NO.
	VA.	29	U000-118-204, C-501	3

COMMONWEALTH OF VIRGINIA
MICHAEL S. AGEE
Lic. No. 015232
PROFESSIONAL ENGINEER

MATTERN & CRAIG, INC
Roanoke, Virginia
(ROADWAY ENGINEER)

DESIGN FEATURES RELATING TO CONSTRUCTION OR TO REGULATION AND CONTROL OF TRAFFIC MAY BE SUBJECT TO CHANGE AS DEEMED NECESSARY BY THE DEPARTMENT

LEGEND

- C _ _ _ DENOTES CONSTRUCTION LIMITS IN CUTS
- F _ _ DENOTES CONSTRUCTION LIMITS IN FILLS
- 1 STD. CG-6 CURB AND GUTTER
- 2 STD. MS-1A CONC. RAISED MEDIAN STRIP
- 3 4" HYDRAULIC CEMENT CONCRETE SIDEWALK
- 4 STD. CG-2 CURB
- 5 STD. GR-2 GUARDRAIL
- DENOTES DEMOLITION OF PAVEMENT
- DENOTES PROPOSED PAVEMENT
- SIGNAL HEAD
- SIGNAL POLE

NOTE: DIMENSIONS ARE TO FACE OF CURB UNLESS OTHERWISE SHOWN DIFFERENT.

NOTE 1:
EXCAVATION/EMBANKMENT IN MEDIAN ISLAND AREA TO BE INCLUDED IN THE PRICE BID FOR EARTHWORK.

S1	In Pl. SMH Top Rim 721.82	S4	12" Sewer Inv In 699.43 Inv Out 690.16
S1-S2	8" Sewer Inv In 719.82 Inv Out 709.61	S4-S5	12" Sewer Inv In 699.43 Inv Out 690.16
S2	In Pl. SMH Top Rim 716.45	S5	In Pl. SMH Top Rim 696.69
S2-S4	8" Sewer Inv In 704.77 Inv Out 699.45	S5-S11	8" Sewer Inv In 690.06 Inv Out 663.53
S3	In Pl. SMH Top Rim 718.84		
S3-S4	12" Sewer Inv In 711.49 Inv Out 699.53		

DRAINAGE LEGEND

- EXISTING DRAINAGE ITEM TO BE ABANDONED.
- EXISTING DRAINAGE ITEM TO BE REMOVED.
- REMOVE EXISTING STRUCTURE.

UTILITY OWNERS

WATER AND SEWER:	CITY OF LYNCHBURG-DEPARTMENT OF UTILITIES 525 TAYLOR STREET LYNCHBURG, VA. 24504 CONTACT: HARRY DOSS (434) 455-4271
GAS:	COLUMBIA GAS OF VIRGINIA 1500 RUTHERFORD STREET LYNCHBURG, VA 24501 CONTACT: STEVE BISHOP (434) 238-1302
ELECTRIC:	AMERICAN ELECTRIC POWER 4001 MAYFLOWER DRIVE LYNCHBURG, VA 24502 CONTACT: FRED BRYANT (434) 546-1963
TELEPHONE/ FIBER OPTIC:	VERIZON 553 LEESVILLE ROAD LYNCHBURG, VA 24502 CONTACT: LESLIE H. SCHMITT (34) 237-9522
TELEPHONE/ FIBER OPTIC:	COMCAST CABLE 2303 NORTH AUGUSTA ST. SUITE D STAUNTON, VA 24401 CONTACT: BRIAN BEMIS (434) 996-8061
FIBER OPTIC:	LUMOS NETWORKS 828 MAIN STREET LYNCHBURG, VA 24504 CONTACT: TIM AGEE (434) 455-6284
TRAFFIC:	CITY OF LYNCHBURG-900 CHURCH STREET LYNCHBURG, VA. 24504 CONTACT: ERIK PETZING (434) 444-3529

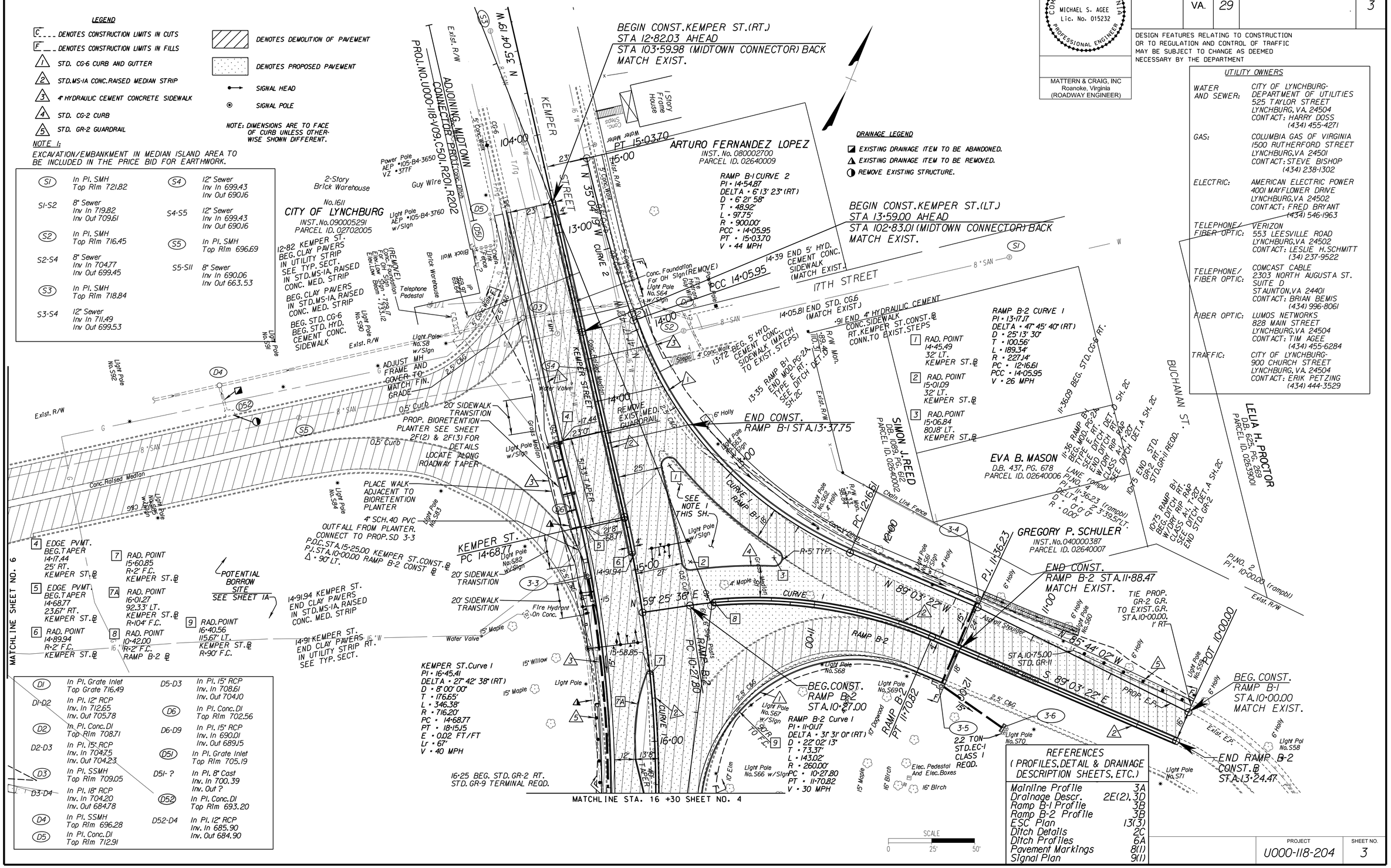

D1	In Pl. Grate Inlet Top Grate 716.49	D5-D3	In Pl. 15" RCP Inv. In 708.61 Inv. Out 704.10
D1-D2	In Pl. 12" RCP Inv. In 712.65 Inv. Out 705.78	D6	In Pl. Conc. DI Top Rim 702.56
D2	In Pl. Conc. DI Top Rim 708.71	D6-D9	In Pl. 15" RCP Inv. In 690.01 Inv. Out 689.15
D2-D3	In Pl. 15" RCP Inv. In 704.75 Inv. Out 704.23	D51	In Pl. Grate Inlet Top Rim 705.19
D3	In Pl. SSMH Top Rim 709.05	D51-?	In Pl. 8" Cast Inv. In 700.39 Inv. Out ?
D3-D4	In Pl. 18" RCP Inv. In 704.20 Inv. Out 684.78	D52	In Pl. Conc. DI Top Rim 693.20
D4	In Pl. SSMH Top Rim 696.28	D52-D4	In Pl. 12" RCP Inv. In 685.90 Inv. Out 684.90
D5	In Pl. Conc. DI Top Rim 712.91		

REFERENCES (PROFILES, DETAIL & DRAINAGE DESCRIPTION SHEETS, ETC.)

Mainline Profile	3A
Drainage Descr.	2E(2), 3D
Ramp B-1 Profile	3B
Ramp B-2 Profile	3B
ESC Plan	13(3)
Ditch Details	2C
Ditch Profiles	6A
Pavement Markings	8(1)
Signal Plan	9(1)

PROJECT	SHEET NO.
U000-118-204	3

SUPERVISED BY CITY OF LYNCHBURG
PROJECT MANAGER STEVE CAMPBELL MATTERN & CRAIG (540)-345-9342
SURVEYED BY MATTERN & CRAIG (540)-345-9342
DESIGNED BY MIKE AGEE MATTERN & CRAIG

COMMONWEALTH OF VIRGINIA
MICHAEL S. AGEE
Lic. No. 015232
PROFESSIONAL ENGINEER

MATTERN & CRAIG, INC
Roanoke, Virginia
(ROADWAY ENGINEER)

REVISED	STATE	STATE ROUTE	STATE PROJECT	SHEET NO.
	VA.	29	U000-118-204, C-501	3A

DESIGN FEATURES RELATING TO CONSTRUCTION OR TO REGULATION AND CONTROL OF TRAFFIC MAY BE SUBJECT TO CHANGE AS DEEMED NECESSARY BY THE DEPARTMENT

PROFILE: KEMPER STREET

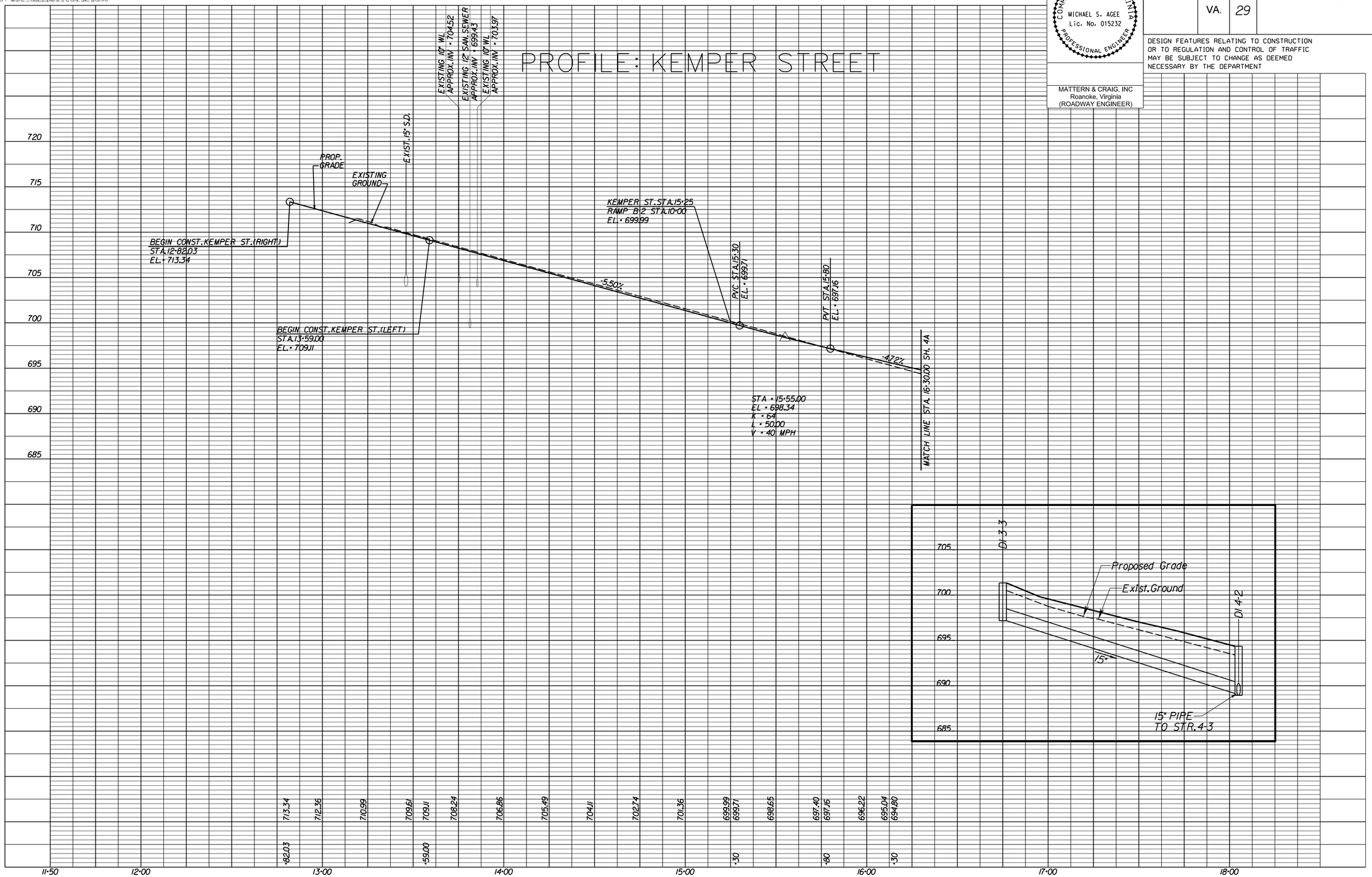

PROJECT	SHEET NO.
U000-118-204	3A

SUPERVISED BY CITY OF LYNCHBURG
PROJECT MANAGER STEVE CAMPBELL MATTERN & CRAIG (540)-345-9342
SURVEYED BY MATTERN & CRAIG (540)-345-9342
DESIGN BY MIKE AGEE MATTERN & CRAIG

REVISED	STATE	STATE ROUTE	STATE PROJECT	SHEET NO.
	VA.	29	U000-118-204, C-501	3B

COMMONWEALTH OF VIRGINIA
MICHAEL S. AGEE
Lic. No. 015232
PROFESSIONAL ENGINEER

MATTERN & CRAIG, INC
Roanoke, Virginia
(ROADWAY ENGINEER)

DESIGN FEATURES RELATING TO CONSTRUCTION OR TO REGULATION AND CONTROL OF TRAFFIC MAY BE SUBJECT TO CHANGE AS DEEMED NECESSARY BY THE DEPARTMENT

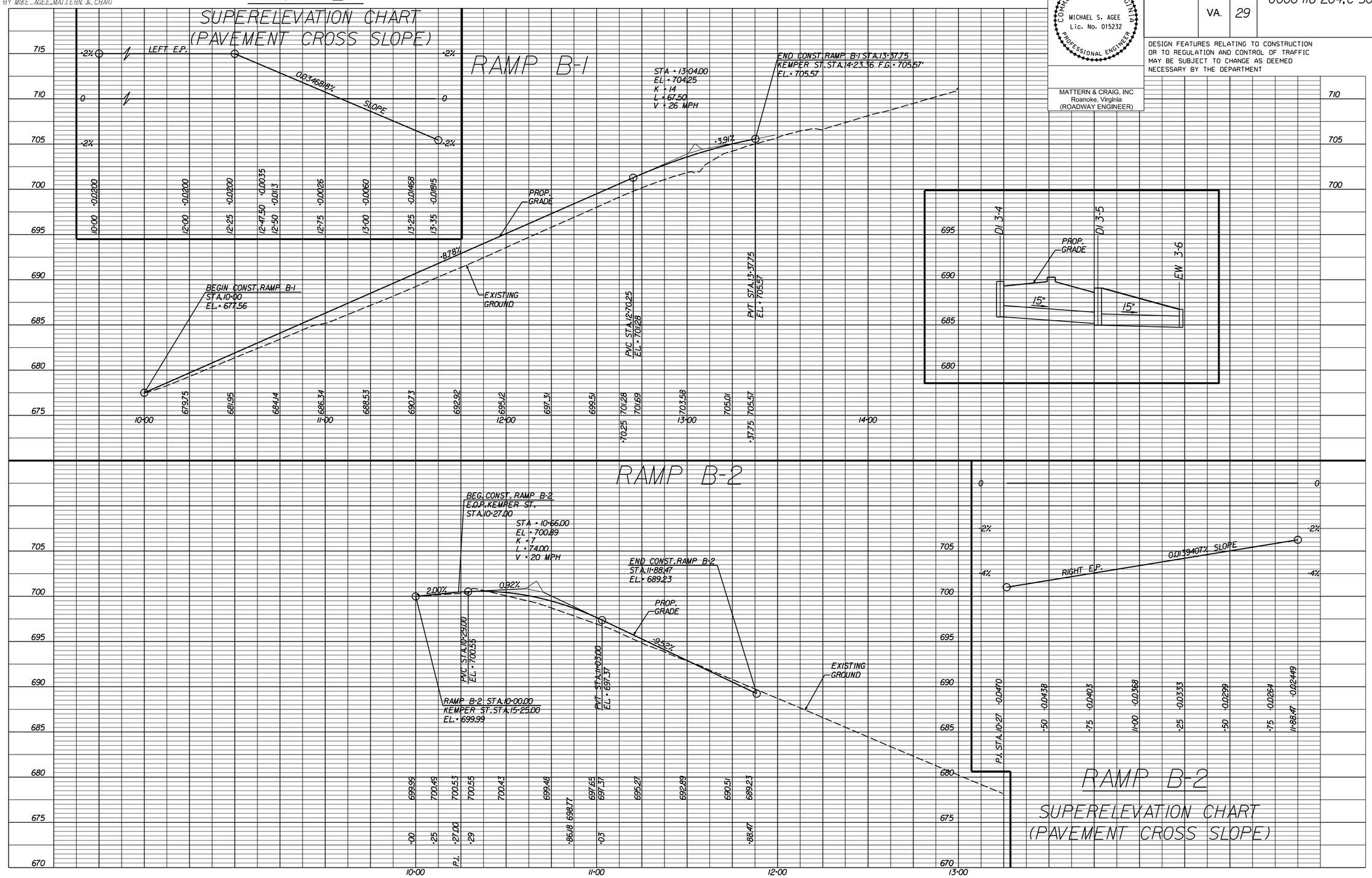

PROJECT	SHEET NO.
U000-118-204	3B

SUPERVISED BY CITY OF LYNCHBURG
PROJECT MANAGER STEVE CAMPBELL, MATTERN & CRAIG (540)-345-9342
SURVEYED BY MATTERN & CRAIG (540)-345-9342
DESIGNED BY MIKE AGEE, MATTERN & CRAIG

COMMONWEALTH OF VIRGINIA
MICHAEL S. AGEE
Lic. No. 015232
PROFESSIONAL ENGINEER

MATTERN & CRAIG, INC
Roanoke, Virginia
(HYDRAULIC ENGINEER)

REVISED	STATE	STATE ROUTE	STATE PROJECT	SHEET NO.
	VA.	29	U000-118-204, C-501	3D

DESIGN FEATURES RELATING TO CONSTRUCTION OR TO REGULATION AND CONTROL OF TRAFFIC MAY BE SUBJECT TO CHANGE AS DEEMED NECESSARY BY THE DEPARTMENT

PROPOSED DRAINAGE

3-3
1 STD.DI-3B REQ'D
L = 8' H = 4.6', INV.697.30

3-4
1 STD.DI-2B REQ'D
L = 12' H = 3.9', INV.685.89

3-5
1 STD.DI-3B REQ'D
L = 6' H = 4.1', INV.684.96

3-4 - 3-5
50' - 15" CONC.PIPE REQ'D (COVER = 2.00')
INV.EL.685.89 (IN), 685.16 (OUT)

3-6
1 STD.EW-1 REQ'D
INV.684.74

3-5 - 3-6
43' - 15" CONC.PIPE REQ'D (COVER = 2.2')
INV.EL.684.96 (IN), 684.74 (OUT)

4-1
1 STD.DI-3B REQ'D
L = 6' H = 5.2', INV.689.46

4-2
1 STD.DI-3B REQ'D
L = 8' H = 5.4', INV.688.94

3-3 - 4-2
132' - 15" CONC.PIPE REQ'D (COVER = 2')
INV.EL.697.30 (IN), 689.14 (OUT)

4-1 - 4-2
28' - 15" CONC.PIPE REQ'D (COVER = 3.46')
INV.EL.689.46 (IN), 689.15 (OUT)

4-3
1 STD.EW-1 REQ'D
INV.688.51

4-2 - 4-3
21' - 15" CONC.PIPE REQ'D (COVER = 3.50')
INV.EL.688.94 (IN), 688.51 (OUT)

4-4
1 STD.DI-3B REQ'D
L = 14' H = 6.1', INV.680.03

4-5
7.2 LF STD. MH-1 OR MH-2 REQ'D
1 STD.MH-1 FRAME AND COVER REQ'D
INV.678.37

4-4 - 4-5
10' - 15" CONC.PIPE REQ'D (COVER = 4.42')
INV.EL.680.03 (IN), 678.50 (OUT)

4-6
1 STD. DI-3B REQ'D
L = 10' H = 3.9', INV.677.38

4-7
1 STD. EW-1 REQ'D
INV.674.90

4-6 - 4-7
51' - 15" CONC.PIPE REQ'D (COVER = 2.0')
INV.EL.677.38 (IN), 674.90 (OUT)

4-8
1 STD. DI-3B REQ'D
L = 8' H = 3.9', INV.670.57

4-9
1 STD. DI-3B REQ'D
L = 8' H = 3.9', INV.668.90

4-10
1 STD. DI-3BB REQ'D
L = 6', H = 10.1', INV.657.15
CONN.TO EXIST.18" PIPE

4-9 - 4-11A
38' - 15" CONC.PIPE REQ'D (COVER = 6.08')
INV.EL.668.90 (IN), 668.32 (OUT)

4-11A
1 STD. EW-1 REQ'D
INV.668.32

4-12
1 STD. DI-3B REQ'D
L = 12' H = 5.9', INV.667.47

4-8 - 4-12
85' - 15" CONC.PIPE REQ'D (COVER = 2.0')
INV.EL.670.57 (IN), 667.67 (OUT)

4-13
1 STD. DI-3B REQ'D
L = 12' H = 6.7', INV.665.01

5-1
1 STD. DI-3B REQ'D
L = 6' H = 4.3', INV.665.39

4-12 - 5-1
58' - 15" CONC.PIPE REQ'D (COVER = 2.39')
INV.EL.667.47 (IN), 665.77 (OUT)

5-2
1 STD. EW-1 REQ'D
INV.664.33

5-1 - 5-2
10' - 15" CONC.PIPE REQ'D (COVER = 2.39')
INV.EL.665.39 (IN), 664.33 (OUT)

5-3
1 STD. DI-3B REQ'D
L = 8' H = 4.1', INV.663.34

4-13 - 5-3
73' - 15" CONC.PIPE REQ'D (COVER = 2.20')
INV.EL.665.01 (IN), 663.54 (OUT)

5-4
1 STD. EW-1 REQ'D
INV.662.58

5-3 - 4-4
12' - 15" CONC.PIPE REQ'D (COVER = 2.20')
INV.EL.663.34 (IN), 662.58 (OUT)

6-1
1 STD. DI-7A REQ'D
H = 6.59', INV.656.81
GRADE AREA AROUND EXISTING INLETS
D30 AND D31 TO DRAIN INTO NEW
TYPICAL DITCH ALONG RT 29

EXISTING DRAINAGE

D-6 - D-9
150' OF EXIST.15" PIPE TO BE REMOVED.

D-7 - D-8
27' OF EXIST.15" PIPE
TO BE ABANDONED.

D-8 - D-9
26' OF EXIST.15" PIPE
TO BE REMOVED.

D-9 - D-10
17' OF EXIST.15" PIPE
TO BE REMOVED.

D-13 - D-14
65' OF EXIST.15" PIPE
TO BE ABANDONED.

D-14 - D-15
58' OF EXIST. 15" PIPE
TO BE REMOVED.

D-29 - D-30
35' OF EXIST.18" PIPE
TO BE ABANDONED.

D-30 - D-31
80' OF EXIST.24" PIPE
TO BE ABANDONED.

D-31 - D-32
68' OF EXIST.24" PIPE
TO BE ABANDONED.

D-33 - D-34
13' OF EXIST.12" PIPE
TO BE ABANDONED.

D-39 - D-40
35' OF EXIST.18" PIPE
TO BE ABANDONED.

D-40 - D-42
59' OF EXIST.18" PIPE
TO BE ABANDONED.

D-52 - D-4
14' OF EXIST.12" PIPE
TO BE ABANDONED.

SUPERVISED BY CITY OF LYNCHBURG
PROJECT MANAGER STEVE CAMPBELL MATTERN & CRAIG (540)-345-9342
SURVEYED BY MATTERN & CRAIG (540)-345-9342
DESIGNED BY MIKE AGEE MATTERN & CRAIG

GRADING SHEET

COMMONWEALTH OF VIRGINIA
MICHAEL S. AGEE
Lic. No. 015232
PROFESSIONAL ENGINEER

MATTERN & CRAIG, INC
Roanoke, Virginia
(ROADWAY ENGINEER)

REVISED	STATE	STATE ROUTE	STATE PROJECT	SHEET NO.
	VA.	29	U000-118-204, C-501	3E

DESIGN FEATURES RELATING TO CONSTRUCTION OR TO REGULATION AND CONTROL OF TRAFFIC MAY BE SUBJECT TO CHANGE AS DEEMED NECESSARY BY THE DEPARTMENT

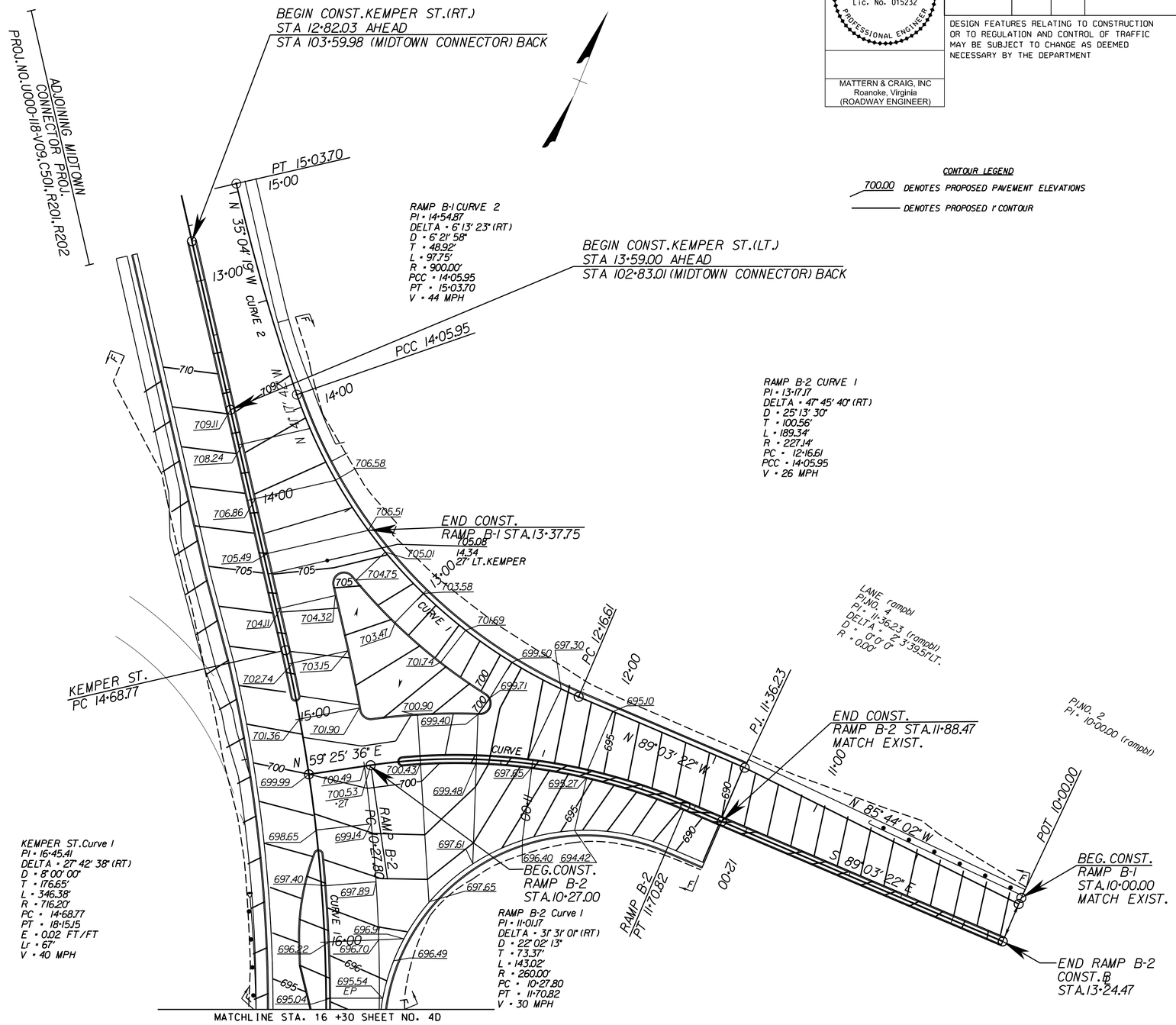

PROJECT	SHEET NO.
U000-118-204	3E

SUPERVISED BY CITY OF LYNCHBURG
PROJECT MANAGER STEVE CAMPBELL MATTERN & CRAIG (540)-345-9342
SURVEYED BY MATTERN & CRAIG (540)-345-9342
DESIGNED BY MIKE AGEE MATTERN & CRAIG

NOTE 1:
EXCAVATION/EMBANKMENT IN MEDIAN ISLAND AREA TO BE INCLUDED IN THE PRICE BID FOR EARTHWORK.

D7	In Pi, Conc.DI Top Rim	D10	In Pi, 15" RCP w/ End Section	D14	In Pi, Conc.DI Top Rim 673.09	D39	In Pi, Conc.DI Top Grate 669.35	D42	In Pi, Grate Inlet Top Grate 666.60
D7-D8	In Pi, 15" RCP Inv. In 690.01 Inv. Out 689.58	D11	In Pi, Conc.DI Top Rim	D24	In Pi, Conc.DI Top Rim 665.75	D39-D40	In Pi, 18" RCP Inv. In 664.48 Inv. Out 661.46	D42-D43	In Pi, 18" RCP Inv. In 660.70 Inv. Out 641.21
D8	In Pi, Conc.DI Top Rim	D11-D12	In Pi, 18" RCP Inv. In 678.37 Inv. Out 676.67	D24-D25	In Pi, 18" RCP Inv. In 662.25 Inv. Out 655.12	D40	In Pi, Conc.DI Top Rim 668.00	D43	In Pi, 18" RCP w/ End Section
D8-D9	In Pi, 15" RCP Inv. In 689.46 Inv. Out 689.15	D12	In Pi, 18" RCP w/ End Section	D25	In Pi, Conc.DI Top Rim 657.80	D40-D42	In Pi, 18" RCP Inv. In 661.40 Inv. Out 660.76		
D9	In Pi, Conc.DI Top Rim	D13	In Pi, Conc.DI Top Rim 677.41	D25-D26	In Pi, 18" RCP Inv. In 653.77 Inv. Out 651.26	D41	In Pi, Conc.DI Top Rim		
D9-D10	In Pi, 15" RCP Inv. In 688.97 Inv. Out 688.51	D13-D14	In Pi, 15" RCP Inv. In 668.10 Inv. Out 667.53	D26	In Pi, 18" RCP w/ End Section	D41-D42	In Pi, 18" RCP Inv. In 661.50 Inv. Out 660.78		

S8	In Pi, SMH Top Rim 647.45
S9	In Pi, SMH Top Rim 644.59
S10	In Pi, SMH Top Rim 644.34

DRAINAGE LEGEND
- EXISTING DRAINAGE ITEM TO BE ABANDONED.
- EXISTING DRAINAGE ITEM TO REMAIN.
- EXISTING DRAINAGE ITEM TO BE REMOVED.
- REMOVE EXISTING STRUCTURE.

LEGEND
- C - - - DENOTES CONSTRUCTION LIMITS IN CUTS
- F - - - DENOTES CONSTRUCTION LIMITS IN FILLS
- 1 STD. CG-6 CURB AND GUTTER
- 2 STD.MS-1A CONC.RAISED MEDIAN STRIP
- 3 4" HYDRAULIC CEMENT CONCRETE SIDEWALK
- 4 STD. CG-2 CURB
- 5 STD. GR-2 GUARDRAIL
- DENOTES DEMOLITION OF PAVEMENT
- DENOTES PROPOSED PAVEMENT
- SIGNAL HEAD
- SIGNAL POLE
- NOTE: DIMENSIONS ARE TO FACE OF CURB UNLESS OTHER-WISE SHOWN DIFFERENT.

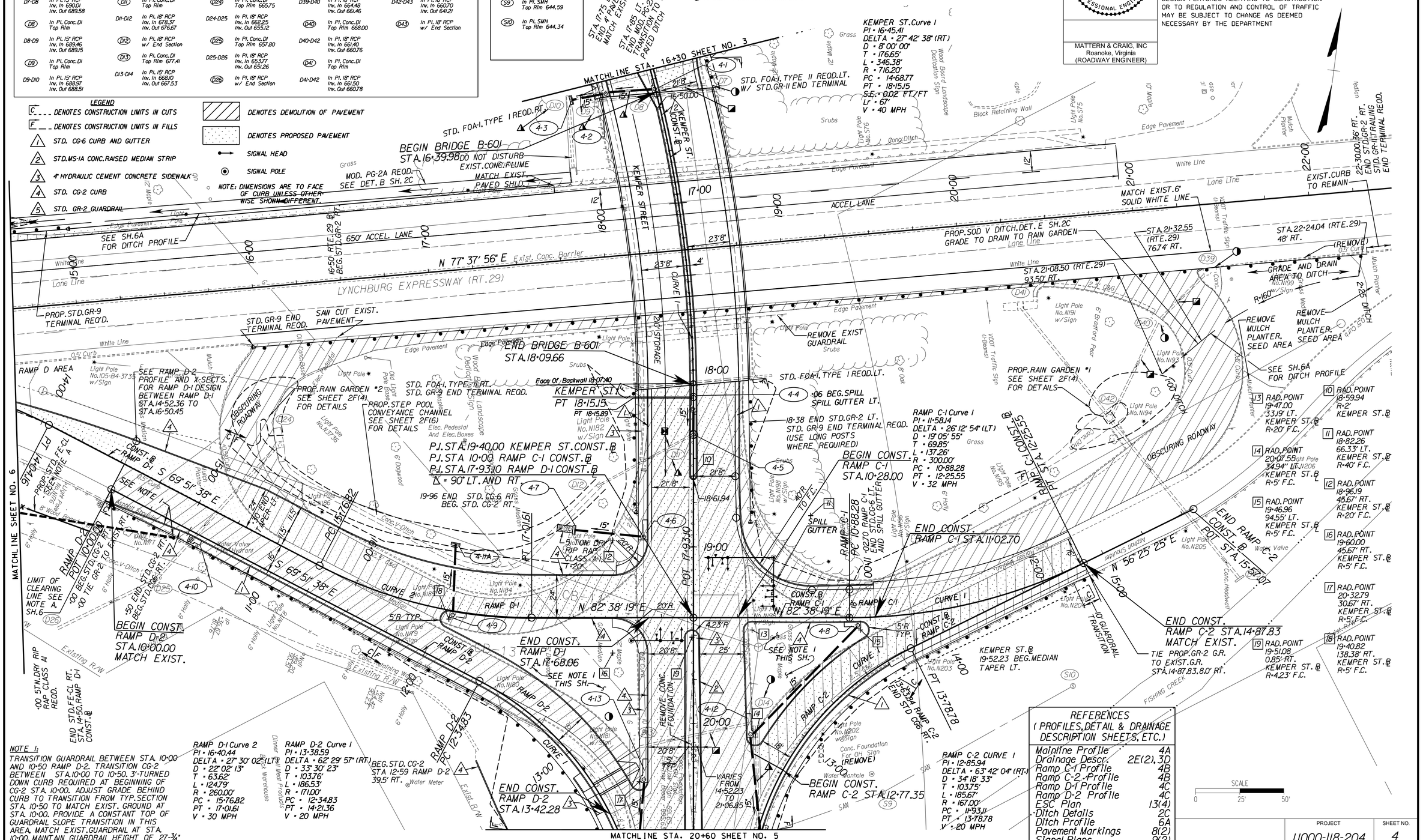

NOTE 1:
TRANSITION GUARDRAIL BETWEEN STA. 10+00 AND 10+50 RAMP D-2. TRANSITION CG-2 BETWEEN STA.10+00 TO 10+50. 3'-TURNED DOWN CURB REQUIRED AT BEGINNING OF CG-2 STA. 10+00. ADJUST GRADE BEHIND CURB TO TRANSITION FROM TYP.SECTION STA. 10+50 TO MATCH EXIST. GROUND AT STA. 10+00. PROVIDE A CONSTANT TOP OF GUARDRAIL SLOPE TRANSITION IN THIS AREA. MATCH EXIST.GUARDRAIL AT STA. 10+00. MAINTAIN GUARDRAIL HEIGHT OF 27-3/4"

REFERENCES (PROFILES, DETAIL & DRAINAGE DESCRIPTION SHEETS, ETC.)

Mainline Profile	4A
Drainage Descr.	2E(2), 3D
Ramp C-1 Profile	4B
Ramp C-2 Profile	4B
Ramp D-1 Profile	4C
Ramp D-2 Profile	4C
ESC Plan	13(4)
Ditch Details	2C
Ditch Profile	6A
Pavement Markings	8(2)
Signal Plans	9(2)

COMMONWEALTH OF VIRGINIA
MICHAEL S. AGEE
Lic. No. 015232
PROFESSIONAL ENGINEER

MATTERN & CRAIG, INC
Roanoke, Virginia
(ROADWAY ENGINEER)

REVISED	STATE	ROUTE	PROJECT	SHEET NO.
	VA.	29	U000-118-204, C-501	4

DESIGN FEATURES RELATING TO CONSTRUCTION OR TO REGULATION AND CONTROL OF TRAFFIC MAY BE SUBJECT TO CHANGE AS DEEMED NECESSARY BY THE DEPARTMENT

PROJECT	SHEET NO.
U000-118-204	4

SUPERVISED BY CITY OF LYNCHBURG
PROJECT MANAGER STEVE CAMPBELL MATTERN & CRAIG (540)-345-9342
SURVEYED BY MATTERN & CRAIG (540)-345-9342
DESIGNED BY MIKE AGEE MATTERN & CRAIG

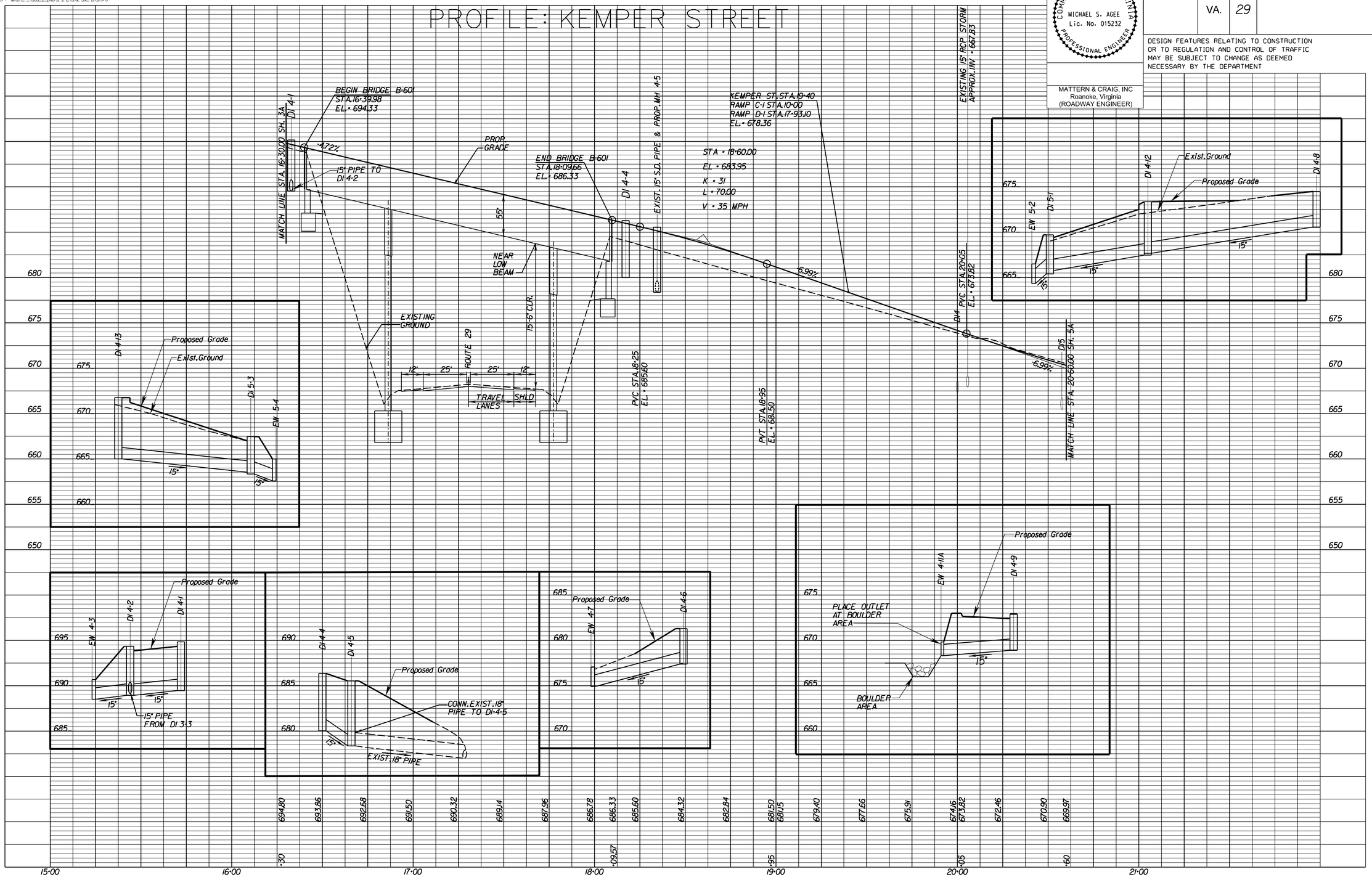

COMMONWEALTH OF VIRGINIA
MICHAEL S. AGEE
Lic. No. 015232
PROFESSIONAL ENGINEER

MATTERN & CRAIG, INC
Roanoke, Virginia
(ROADWAY ENGINEER)

REVISED	STATE	STATE ROUTE	STATE PROJECT	SHEET NO.
	VA.	29	U000-118-204, C-501	4A

DESIGN FEATURES RELATING TO CONSTRUCTION OR TO REGULATION AND CONTROL OF TRAFFIC MAY BE SUBJECT TO CHANGE AS DEEMED NECESSARY BY THE DEPARTMENT

PROJECT	SHEET NO.
U000-118-204	4A

SUPERVISED BY CITY OF LYNCHBURG
PROJECT MANAGER STEVE CAMPBELL MATTERN & CRAIG (540)-345-9342
SURVEYED BY MATTERN & CRAIG (540)-345-9342
DESIGNED BY MIKE AGEE MATTERN & CRAIG

COMMONWEALTH OF VIRGINIA
MICHAEL S. AGEE
Lic. No. 015232
PROFESSIONAL ENGINEER

MATTERN & CRAIG, INC
Roanoke, Virginia
(ROADWAY ENGINEER)

REVISED	STATE	STATE ROUTE	STATE PROJECT	SHEET NO.
	VA.	29	U000-118-204, C-501	4B

DESIGN FEATURES RELATING TO CONSTRUCTION OR TO REGULATION AND CONTROL OF TRAFFIC MAY BE SUBJECT TO CHANGE AS DEEMED NECESSARY BY THE DEPARTMENT

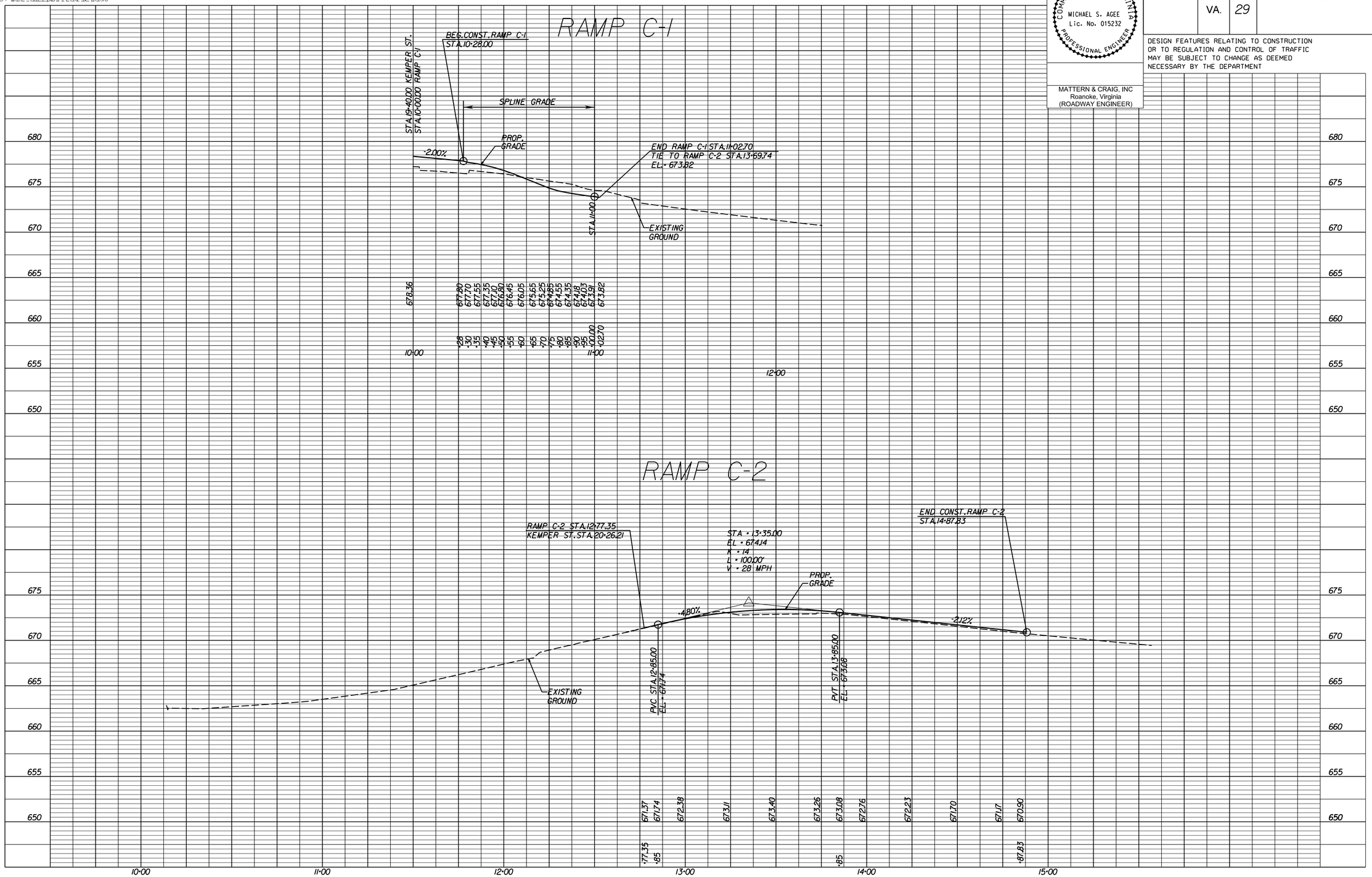

PROJECT	SHEET NO.
U000-118-204	4B

SUPERVISED BY CITY OF LYNCHBURG
PROJECT MANAGER STEVE CAMPBELL MATTERN & CRAIG (540)-345-9342
SURVEYED BY MATTERN & CRAIG (540)-345-9342
DESIGNED BY MIKE AGEE MATTERN & CRAIG

COMMONWEALTH OF VIRGINIA
MICHAEL S. AGEE
Lic. No. 015232
PROFESSIONAL ENGINEER

MATTERN & CRAIG, INC
Roanoke, Virginia
(ROADWAY ENGINEER)

REVISED	STATE	STATE ROUTE	STATE PROJECT	SHEET NO.
	VA.	29	U000-118-204, C-501	4C

DESIGN FEATURES RELATING TO CONSTRUCTION OR TO REGULATION AND CONTROL OF TRAFFIC MAY BE SUBJECT TO CHANGE AS DEEMED NECESSARY BY THE DEPARTMENT

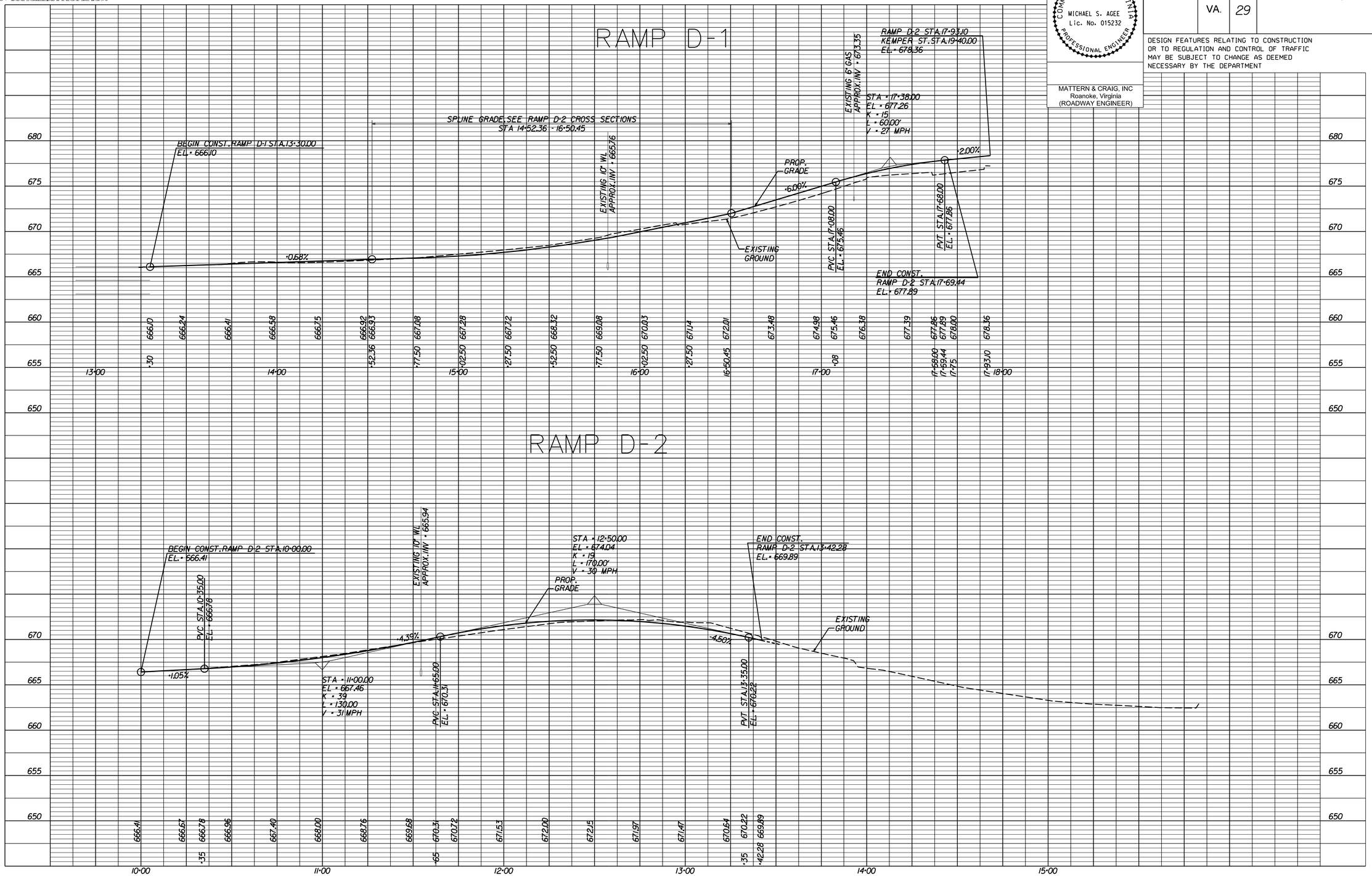

PROJECT	SHEET NO.
U000-118-204	4C

SUPERVISED BY CITY OF LYNCHBURG
PROJECT MANAGER STEVE CAMPBELL MATTERN & CRAIG (540)-345-9342
SURVEYED BY MATTERN & CRAIG (540)-345-9342
DESIGNED BY MIKE AGEE MATTERN & CRAIG

GRADING SHEET

COMMONWEALTH OF VIRGINIA
MICHAEL S. AGEE
Lic. No. 015232
PROFESSIONAL ENGINEER

MATTERN & CRAIG, INC
Roanoke, Virginia
(ROADWAY ENGINEER)

REVISED	STATE	STATE ROUTE	STATE PROJECT	SHEET NO.
	VA.	29	U000-118-204, C-501	4D

DESIGN FEATURES RELATING TO CONSTRUCTION OR TO REGULATION AND CONTROL OF TRAFFIC MAY BE SUBJECT TO CHANGE AS DEEMED NECESSARY BY THE DEPARTMENT

KEMPER ST. Curve 1
PI = 16+45.41
DELTA = 27° 42' 38" (RT)
D = 8° 00' 00"
T = 176.65'
L = 346.38'
R = 716.20'
PC = 14+68.77
PT = 18+15.15
S.E. = 0.02 FT/FT
Lr = 67'
V = 40 MPH

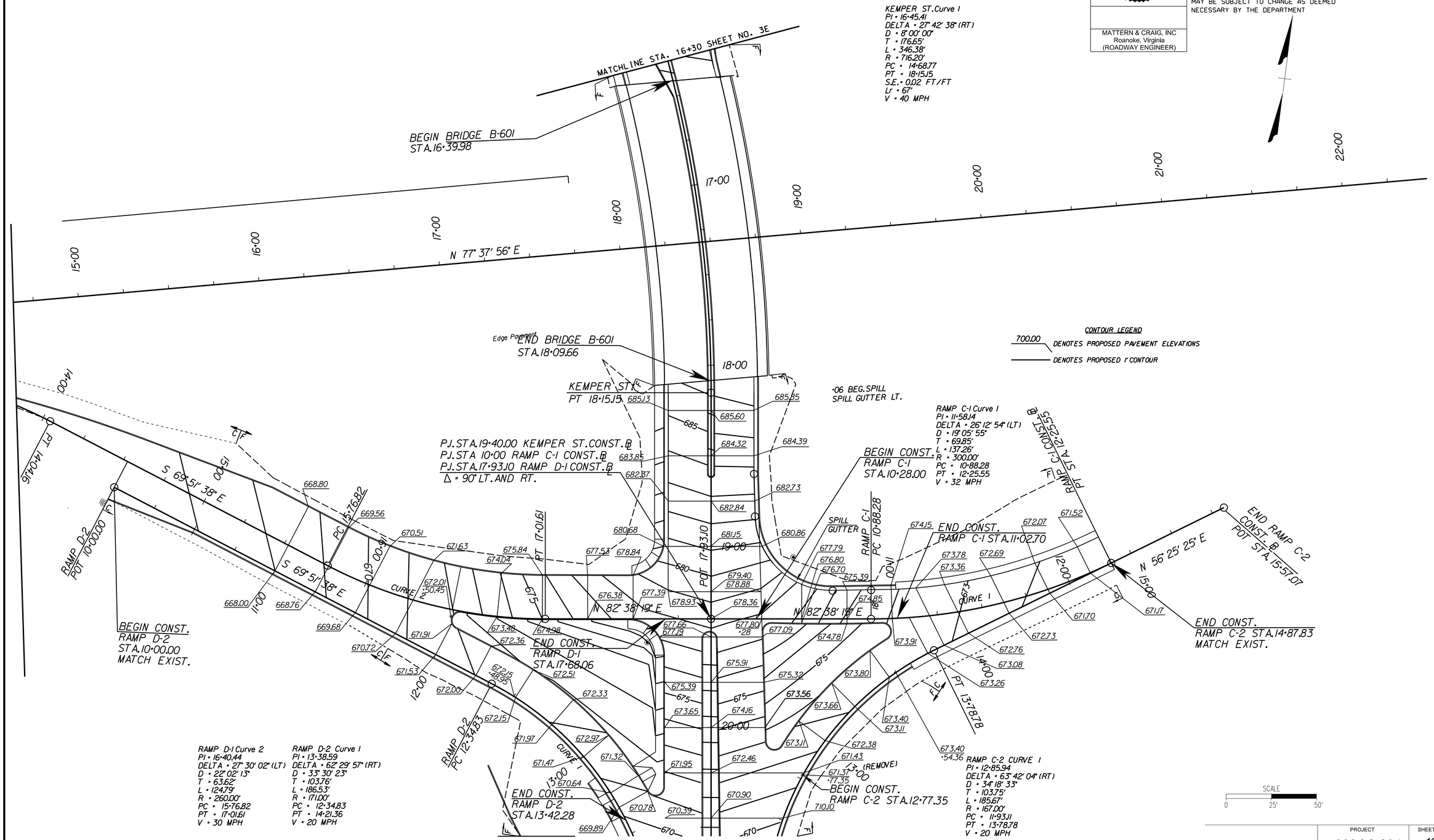

PROJECT	SHEET NO.
U000-118-204	4D

SUPERVISED BY CITY OF LYNCHBURG
PROJECT MANAGER STEVE CAMPBELL, MATTERN & CRAIG (540)-345-9342
SURVEYED BY MATTERN & CRAIG (540)-345-9342
DESIGNED BY MIKE AGEE, MATTERN & CRAIG

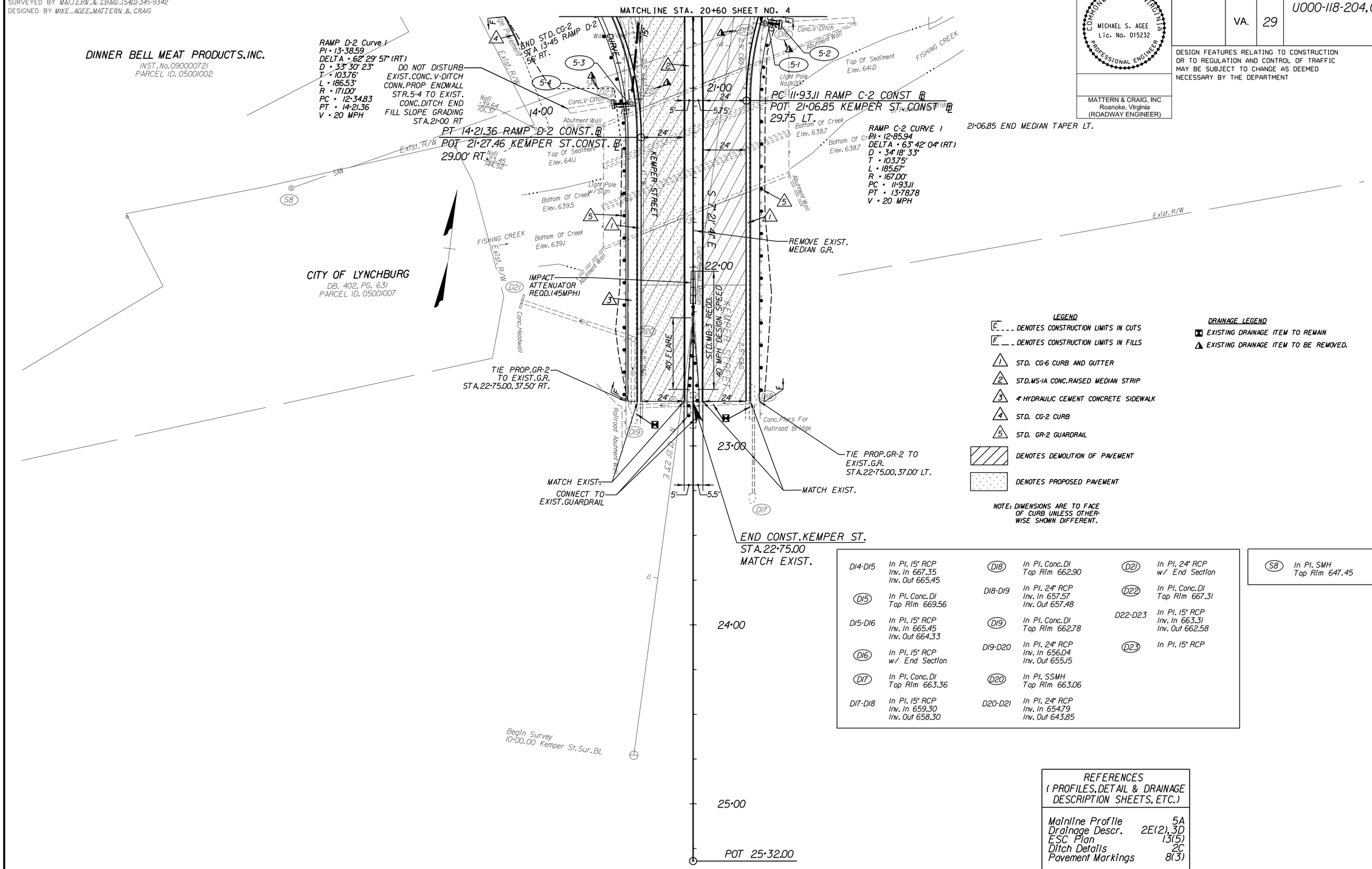

REVISED	STATE	ROUTE	PROJECT	SHEET NO.
	VA.	29	U000-118-204, C-501	5

COMMONWEALTH OF VIRGINIA
MICHAEL S. AGEE
Lic. No. 015232
PROFESSIONAL ENGINEER

MATTERN & CRAIG, INC
Roanoke, Virginia
(ROADWAY ENGINEER)

DESIGN FEATURES RELATING TO CONSTRUCTION OR TO REGULATION AND CONTROL OF TRAFFIC MAY BE SUBJECT TO CHANGE AS DEEMED NECESSARY BY THE DEPARTMENT

LEGEND

- C ___ DENOTES CONSTRUCTION LIMITS IN CUTS
- F ___ DENOTES CONSTRUCTION LIMITS IN FILLS
- 1 STD. CG-6 CURB AND GUTTER
- 2 STD. MS-1A CONC. RAISED MEDIAN STRIP
- 3 4" HYDRAULIC CEMENT CONCRETE SIDEWALK
- 4 STD. CG-2 CURB
- 5 STD. GR-2 GUARDRAIL
- DENOTES DEMOLITION OF PAVEMENT
- DENOTES PROPOSED PAVEMENT

NOTE: DIMENSIONS ARE TO FACE OF CURB UNLESS OTHERWISE SHOWN DIFFERENT.

DRAINAGE LEGEND

- EXISTING DRAINAGE ITEM TO REMAIN
- EXISTING DRAINAGE ITEM TO BE REMOVED.

DI4-DI5	In Pl. 15" RCP Inv. In 667.35 Inv. Out 665.45	DI8	In Pl. Conc. DI Top Rim 662.90	D21	In Pl. 24" RCP w/ End Section
DI5	In Pl. Conc. DI Top Rim 669.56	DI8-DI9	In Pl. 24" RCP Inv. In 657.57 Inv. Out 657.48	D22	In Pl. Conc. DI Top Rim 667.31
DI5-DI6	In Pl. 15" RCP Inv. In 665.45 Inv. Out 664.33	DI9	In Pl. Conc. DI Top Rim 662.78	D22-D23	In Pl. 15" RCP Inv. In 663.31 Inv. Out 662.58
DI6	In Pl. 15" RCP w/ End Section	DI9-D20	In Pl. 24" RCP Inv. In 656.04 Inv. Out 655.15	D23	In Pl. 15" RCP
DI7	In Pl. Conc. DI Top Rim 663.36	D20	In Pl. SSMH Top Rim 663.06		
DI7-DI8	In Pl. 15" RCP Inv. In 659.30 Inv. Out 658.30	D20-D21	In Pl. 24" RCP Inv. In 654.79 Inv. Out 643.85		

S8	In Pl. SMH Top Rim 647.45

REFERENCES
(PROFILES, DETAIL & DRAINAGE DESCRIPTION SHEETS, ETC.)

Mainline Profile	5A
Drainage Descr.	2E(2), 3D
ESC Plan	13(5)
Ditch Details	2C
Pavement Markings	8(3)

SCALE
0 25' 50'

PROJECT	SHEET NO.
U000-118-204	5

SUPERVISED BY CITY OF LYNCHBURG
PROJECT MANAGER STEVE CAMPBELL MATTERN & CRAIG (540)-345-9342
SURVEYED BY MATTERN & CRAIG (540)-345-9342
DESIGNED BY MIKE AGEE MATTERN & CRAIG

COMMONWEALTH OF VIRGINIA
MICHAEL S. AGEE
Lic. No. 015232
PROFESSIONAL ENGINEER

MATTERN & CRAIG, INC
Roanoke, Virginia
(ROADWAY ENGINEER)

REVISED	STATE	STATE ROUTE	STATE PROJECT	SHEET NO.
	VA.	29	U000-118-204, C-501	5A

DESIGN FEATURES RELATING TO CONSTRUCTION OR TO REGULATION AND CONTROL OF TRAFFIC MAY BE SUBJECT TO CHANGE AS DEEMED NECESSARY BY THE DEPARTMENT

PROFILE: KEMPER STREET

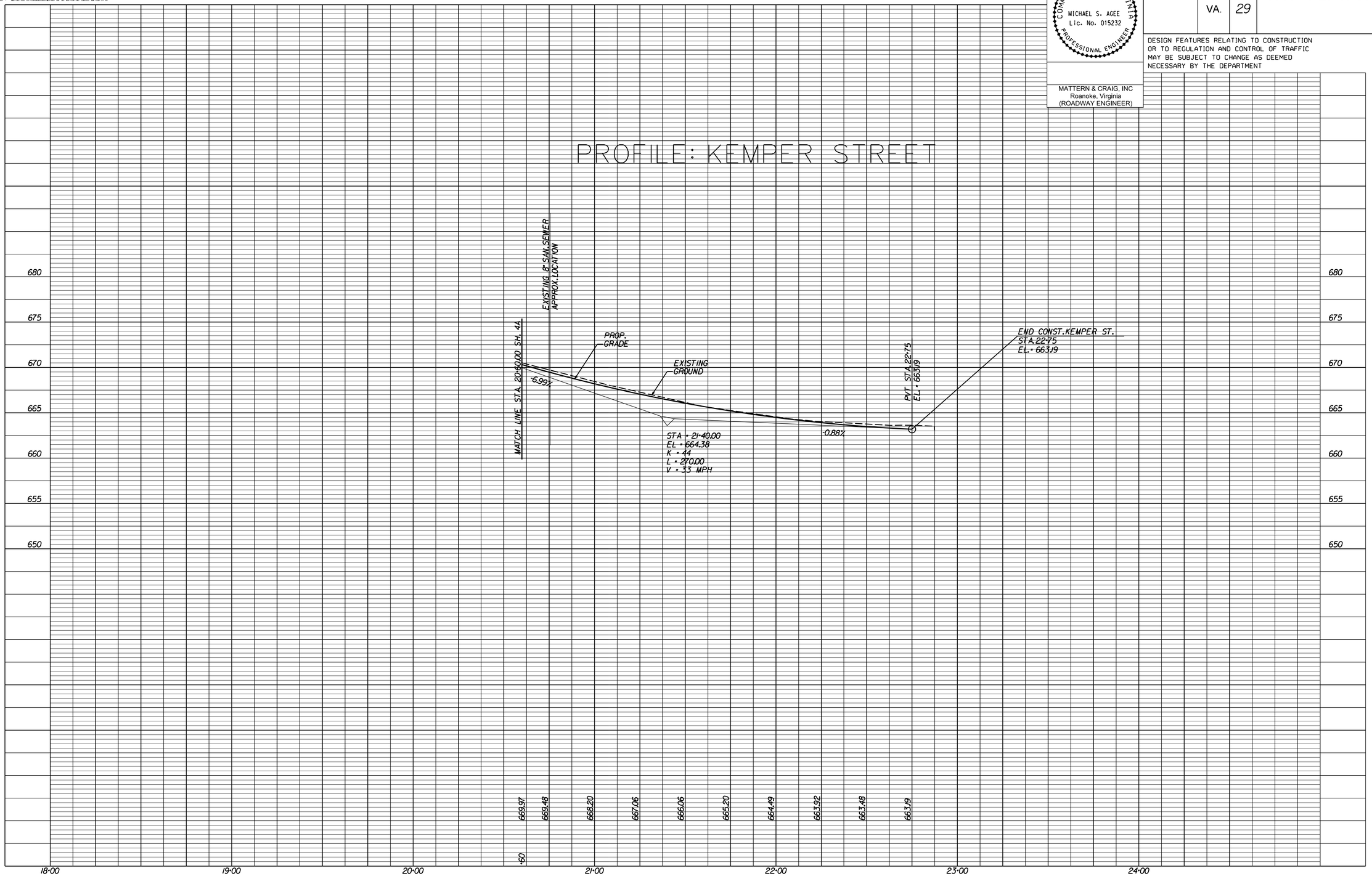

PROJECT	SHEET NO.
U000-118-204	5A

SUPERVISED BY CITY OF LYNCHBURG
PROJECT MANAGER STEVE CAMPBELL, MATTERN & CRAIG (540)-345-9342
SURVEYED BY MATTERN & CRAIG (540)-345-9342
DESIGNED BY MIKE AGEE, MATTERN & CRAIG

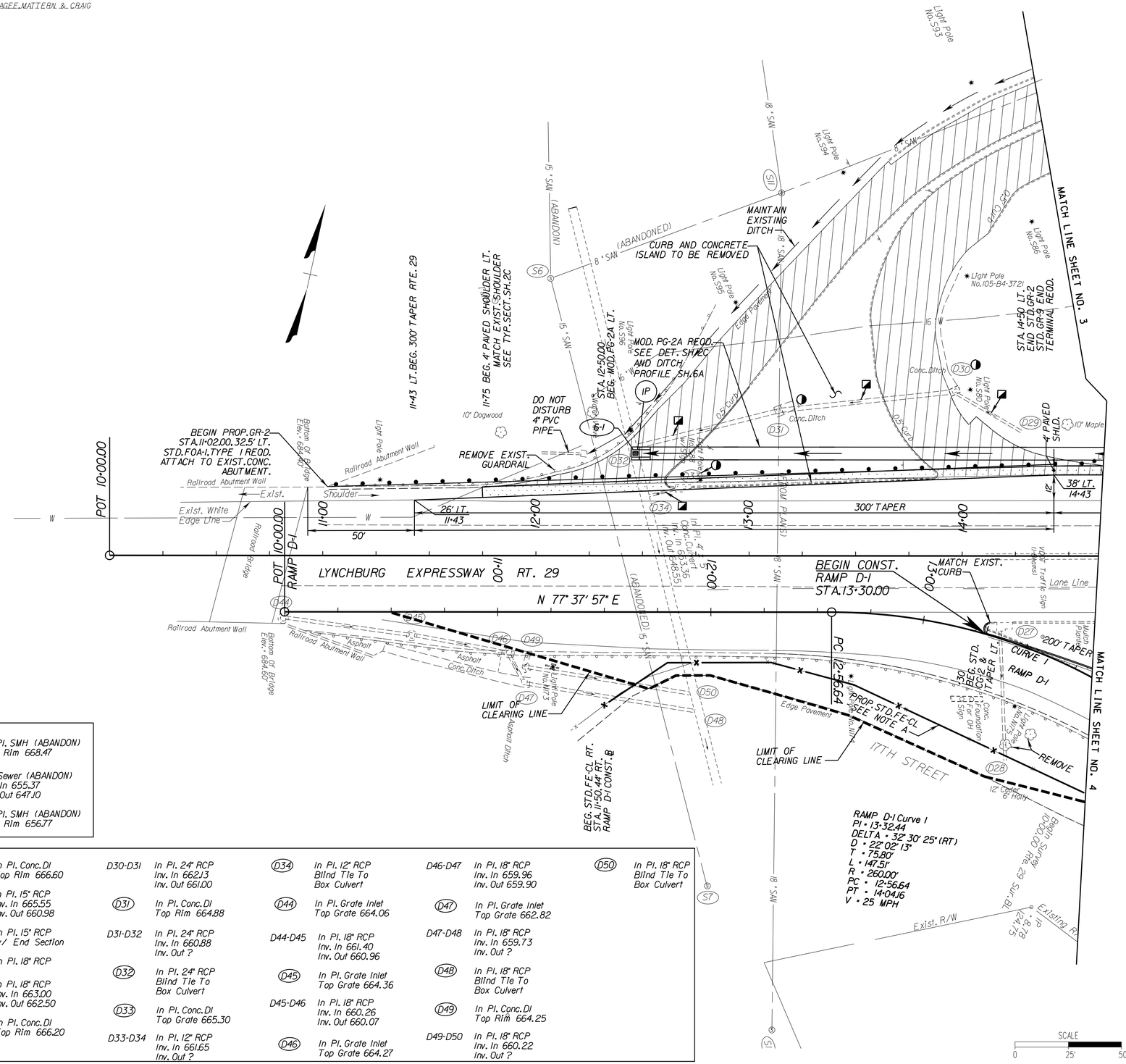

S6	In Pl. SMH (ABANDON) Top Rim 668.47
S6-S7	15" Sewer (ABANDON) Inv In 655.37 Inv Out 647.10
S7	In Pl. SMH (ABANDON) Top Rim 656.77

D27	In Pl. Conc. DI Top Rim 666.60	D30-D31	In Pl. 24" RCP Inv. In 662.13 Inv. Out 661.00	D34	In Pl. 12" RCP Blind Tie To Box Culvert	D46-D47	In Pl. 18" RCP Inv. In 659.96 Inv. Out 659.90	D50	In Pl. 18" RCP Blind Tie To Box Culvert
D27-D28	In Pl. 15" RCP Inv. In 665.55 Inv. Out 660.98	D31	In Pl. Conc. DI Top Rim 664.88	D44	In Pl. Grate Inlet Top Grate 664.06	D47	In Pl. Grate Inlet Top Grate 662.82		
D28	In Pl. 15" RCP w/ End Section	D31-D32	In Pl. 24" RCP Inv. In 660.88 Inv. Out ?	D44-D45	In Pl. 18" RCP Inv. In 661.40 Inv. Out 660.96	D47-D48	In Pl. 18" RCP Inv. In 659.73 Inv. Out ?		
D29	In Pl. 18" RCP	D32	In Pl. 24" RCP Blind Tie To Box Culvert	D45	In Pl. Grate Inlet Top Grate 664.36	D48	In Pl. 18" RCP Blind Tie To Box Culvert		
D29-D30	In Pl. 18" RCP Inv. In 663.00 Inv. Out 662.50	D33	In Pl. Conc. DI Top Grate 665.30	D45-D46	In Pl. 18" RCP Inv. In 660.26 Inv. Out 660.07	D49	In Pl. Conc. DI Top Rim 664.25		
D30	In Pl. Conc. DI Top Rim 666.20	D33-D34	In Pl. 12" RCP Inv. In 661.65 Inv. Out ?	D46	In Pl. Grate Inlet Top Grate 664.27	D49-D50	In Pl. 18" RCP Inv. In 660.22 Inv. Out ?		

COMMONWEALTH OF VIRGINIA
MICHAEL S. AGEE
Lic. No. 015232
PROFESSIONAL ENGINEER

MATTERN & CRAIG, INC
Roanoke, Virginia
(ROADWAY ENGINEER)

REVISED	STATE	STATE ROUTE	STATE PROJECT	SHEET NO.
	VA.	29	U000-118-204, C-501	6

DESIGN FEATURES RELATING TO CONSTRUCTION OR TO REGULATION AND CONTROL OF TRAFFIC MAY BE SUBJECT TO CHANGE AS DEEMED NECESSARY BY THE DEPARTMENT

LEGEND

C - - - - DENOTES CONSTRUCTION LIMITS IN CUTS

F - - - - DENOTES CONSTRUCTION LIMITS IN FILLS

REMOVE EXIST. RAMPS AND TOPSOIL AND SEED

DENOTES PROPOSED PAVEMENT

IP DENOTES INLET PROTECTION: STD. AND SPEC. 3.07

DRAINAGE LEGEND

EXISTING DRAINAGE ITEM TO BE ABANDONED.

REMOVE EXISTING STRUCTURE.

NOTE: DIMENSIONS ARE TO FACE OF CURB UNLESS OTHERWISE SHOWN DIFFERENT.

NOTE: A REMOVE EXIST BOARD FENCE BETWEEN STA. 11+50 TO STA. 14+50 RAMP D-1 CONST. @ RT. REPLACE W/STD. FE-CL (CHAIN LINK FENCE). FE-CL TO BEGIN AND END ADJACENT TO REMAINING BOARD FENCE. CONTRACTOR SHALL CLEAR BRUSH AND TREES BETWEEN LIMIT OF CLEARING LINE SHOWN ON PLAN AND RAMP D-1 CONST. @ TO PROVIDE CLEAR SIGHT DISTANCE BETWEEN R.R. BRIDGE AND VEHICLE DETECTION AREA ON RAMP D-1 AND D-2 STA. 16+00. COST TO CLEAR AREA TO BE INCLUDED IN PRICE BID FOR "CLEARING AND GRUBBING.

REFERENCES
(PROFILES, DETAIL & DRAINAGE DESCRIPTION SHEETS, ETC.)

Drainage Descr.	2E(2), 3D
Ditch Details	2C
Ditch Profile	6A
Pavement Marking	8(3)

PROJECT	SHEET NO.
U000-118-204	6

SUPERVISED BY CITY OF LYNCHBURG
PROJECT MANAGER STEVE CAMPBELL MATTERN & CRAIG (540)-345-9342
SURVEYED BY MATTERN & CRAIG (540)-345-9342
DESIGNED BY MIKE AGEE MATTERN & CRAIG

COMMONWEALTH OF VIRGINIA
MICHAEL S. AGEE
Lic. No. 015232
PROFESSIONAL ENGINEER

MATTERN & CRAIG, INC
Roanoke, Virginia
(ROADWAY ENGINEER)

REVISED	STATE	STATE ROUTE	STATE PROJECT	SHEET NO.
	VA.	29	U000-118-204, C-501	6A

DESIGN FEATURES RELATING TO CONSTRUCTION OR TO REGULATION AND CONTROL OF TRAFFIC MAY BE SUBJECT TO CHANGE AS DEEMED NECESSARY BY THE DEPARTMENT

DITCH PROFILE LEFT STA. 12+20 - 17+75 RTE. 29 CONST. ℄

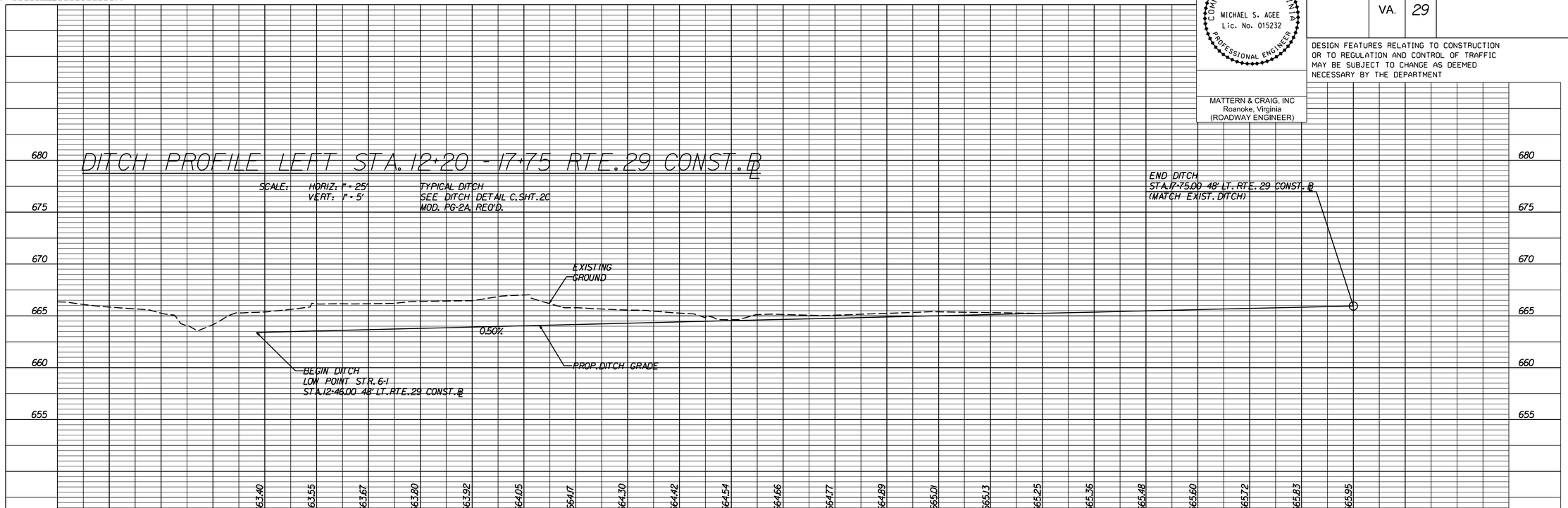

DITCH PROFILE TO RAIN GARDEN #1 STA. 21+08.50 - 22+40 RTE. 29 CONST. ℄

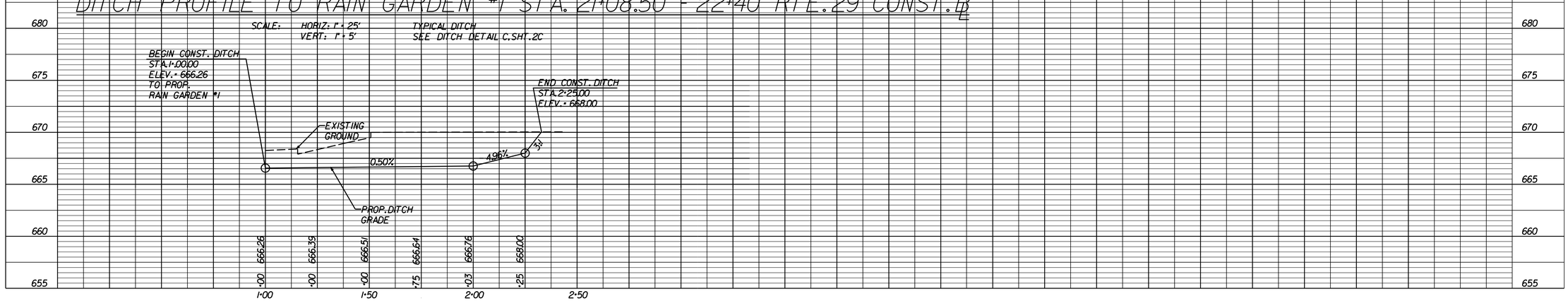

PROJECT	SHEET NO.
U000-118-204	6A

DEPARTMENT OF PUBLIC WORKS
ENGINEERING DIVISION

PROPOSED BRIDGE REPLACEMENT
KEMPER STREET (ROUTE 460) OVER
LYNCHBURG EXPRESSWAY (ROUTE 29A)

STATE PROJECT NUMBER U000-118-204, C-501, B-601

EXISTING STRUCTURE NO. 1851

GENERAL CONSTRUCTION NOTES:

This project shall be constructed in accordance with:
1. VDOT Road and Bridge Specifications, 2007
2. VDOT Road and Bridge Standards, 2008
3. City of Lynchburg Manual of Specifications and Standard Details, Nov. 2009
4. Virginia Work Area Protection Manual dated May, 2005 and latest revisions, and as amended by the Supplemental Specifications & contract documents for this project and these drawings.

INDEX OF SHEETS

Sheet No.	Description
1	Title sheet, Index of sheets and table of revisions
2	Plan, profile, design exceptions and general notes
3	Estimated quantities, bridge layout and substructure layout
4	Abutment A - Plan & Elevation
5	Abutment A - Details & Footing Plan
6	Abutment B - Plan & Elevation
7	Abutment B - Details & Footing Plan
8	Pier 1 - Plan, Elevation, Details & Footing Plan
9	Pier 2 - Plan, Elevation, Details & Footing Plan
10	Transverse section
11	Deck plan and elevations
12	Deck details
13	Erection diagram and top of slab elevations
14	Prestressed Concrete Bulb-T PCBT-45 (Span a)
15	Prestressed Concrete Bulb-T PCBT-45 (Span b)
16	Prestressed Concrete Bulb-T PCBT-45 (Span c)
17	Prestressed Concrete Bulb-T miscellaneous beam details
18	Prestressed Concrete Bulb-T miscellaneous beam details
19	Prestressed Concrete Bulb-T (PCBT-45) intermediate diaphragm details
20	Prestressed Concrete Bulb-T (PCBT-45) Pier 1 Closure diaphragm details
21	Prestressed Concrete Bulb-T (PCBT-45) Pier 2 Closure diaphragm details
22	Prestressed beam bearing details
23	Terminal wall
24	Steel railing
25	Railing connections and notes
26	Bridge conduit system
27	Water line system
28	Abutment demolition and phased construction
29	Pier demolition and phased construction
30	Superstructure demolition and phased construction
31	Reinforcing steel - Superstructure
32	Reinforcing steel - Abutment A
33	Reinforcing steel - Abutment B
34	Reinforcing steel - Piers

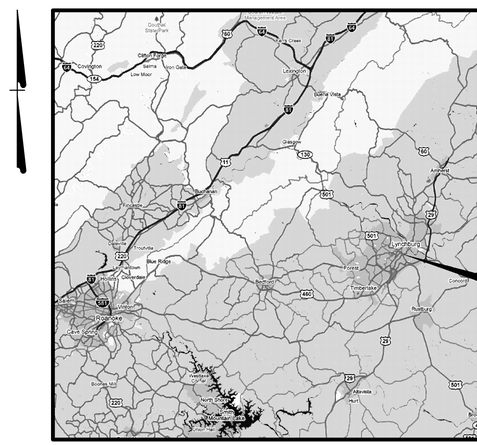

PROJECT LOCATION

VICINITY MAP
Not to scale

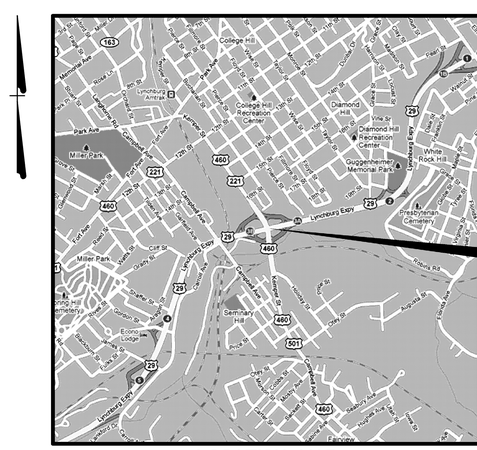

PROJECT AREA

LOCATION MAP
Not to scale

COMMONWEALTH OF VIRGINIA
CHAD M. THOMAS
Lic. No. 036962
PROFESSIONAL ENGINEER

MATTERN & CRAIG
ROANOKE, VA
STRUCTURAL ENGINEER

Rev. No.	Sheets Revised	Date

TABLE OF REVISIONS

PROJECT NO.: U000-118-204, C-501, B-601
DATE: 9/13/2013
SHEET: 1 OF 34

Revisions | Date

Issue Date: 13-SEPT-2013
Drawn By: DKA
Designed By: SRA
Checked By: CMT
Date: 13-SEPT-2013

Mattern & Craig
CONSULTING ENGINEERS • SURVEYORS
701 FIRST STREET S.W.
ROANOKE, VIRGINIA 24016
(540) 345-9342
FAX (540) 345-7691

BRIDGE REPLACEMENT - KEMPER STREET (ROUTE 460)
OVER LYNCHBURG EXPRESSWAY (ROUTE 29A)

TITLE SHEET

CITY OF LYNCHBURG, VIRGINIA

Vertical Scale: N/A
Horizontal Scale: N/A
Commission Number: 2387D
Sheet No.: 7(1)

STATE	FEDERAL AID ROUTE	FEDERAL AID PROJECT	STATE ROUTE	STATE PROJECT	SHEET NO.
VA.	—	—	29	U000-118-204, C-501, B-601	7(2)

NBIS Number: 000000000020571 — UPC No. 94745

Federal Oversight Code: NFO — FHWA Construction and Scour Code: X281-SN

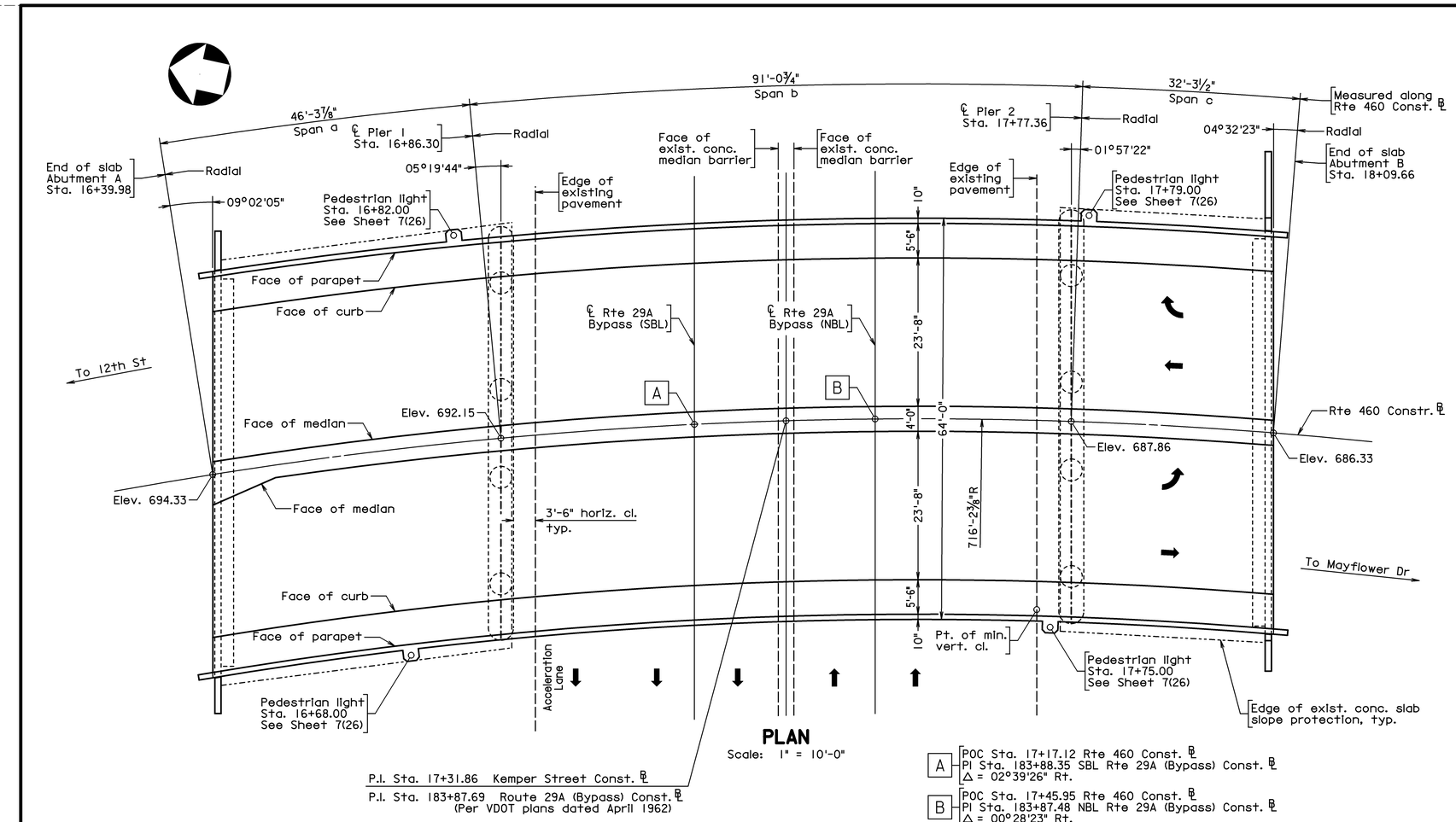

PLAN
Scale: 1" = 10'-0"

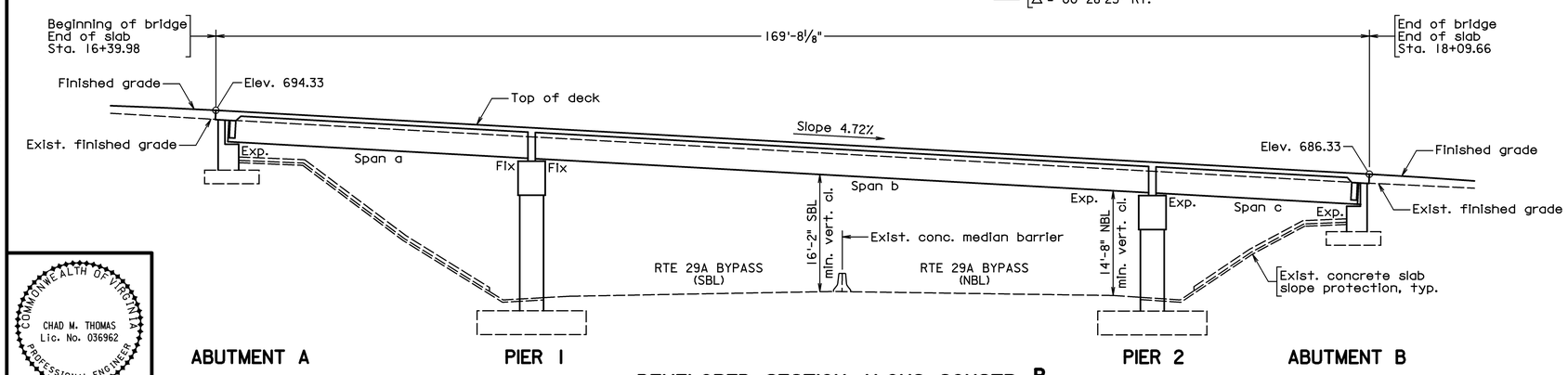

DEVELOPED SECTION ALONG CONSTR. ℄
Scale: 1" = 10'-0"

b1851002

DESIGN EXCEPTION(S):

Minimum vertical clearance = 14'-8"

GENERAL NOTES:

Widths: 5'-6" sidewalk, 23'-8" roadway, 4'-0" median, 23'-8" roadway, 5'-6" sidewalk
62'-4" face-to-face of parapets
64'-0" out to out deck width.

Span layout: 45'-1" - 91'-0" - 31'-0" prestressed concrete 45" deep bulb-T beam spans continuous for live load.

Capacity: HL-93 loading.

Specifications:

Construction: Virginia Department of Transportation Road and Bridge Specifications, 2007.

Design: AASHTO LRFD Bridge Design Specifications, 4th Edition, 2007; 2008 and 2009 Interim Specifications; and VDOT Modifications.

Standards: Virginia Department of Transportation Road and Bridge Standards, 2008.

These plans are incomplete unless accompanied by the Supplemental Specifications and Special Provisions included in the contract documents.

This project is to be constructed in accordance with the Virginia Department of Transportation Work Area Protection Manual, May 2005 and latest revisions.

Design loading includes 20 psf allowance for construction tolerances and construction methods. Design loading includes 15 psf allowance for future wearing surface.

All structural steel, including bearings, shall be galvanized ASTM A709, Grade 36.

Low permeability concrete shall be used in this project.

Concrete in the superstructure including parapets/railings, terminal walls, and piers shall be Class A4; in abutments, Class A3.

Prestressed concrete in beams shall be Class A5 having a minimum compressive cylinder strength at 28 days equal to 6,000 psi and a minimum compressive cylinder strength at time of release of strands equal to 5,000 psi.

Prestressed concrete beams shall be at least 90 days old prior to establishing continuity.

All reinforcing steel shall be deformed and shall conform to ASTM A615, Grade 60 except for reinforcing steels noted as CRR (corrosion resistant reinforcing) which shall conform to applicable specifications noted in the special provision. All reinforcing bar dimensions on the detailed drawings are to centers of bars except where otherwise noted and are subject to fabrication and construction tolerances.

Corrosion resistant reinforcing (CRR) steels shall conform to one or more of the three types (low carbon/chromium, stainless clad and solid stainless) listed in the special provision. The minimum yield strength shall be: 100 ksi for low carbon/chromium and 60 ksi for stainless clad steel and solid stainless steel.

Prestressing strands shall be uncoated, seven-wire, low-relaxation steel strands conforming to ASTM A416 Grade 270.

Abutment footings shall bear on firm material. Footings for abutments have been designed for an allowable bearing pressure of 1.5 tons/sq. ft. min. Pier footings shall bear on firm material. Footings for piers have been designed for an allowable bearing pressure of 3.0 tons/sq. ft. min. Allowable bearing pressures shall be field verified by a geotechnical engineer prior to construction. It is the Contractor's responsibility to keep the insitu subgrade beneath proposed foundations dry and undisturbed. If material is found to be unsuitable, suitable bearing capacity shall be provided.

The existing waterline shall be relocated as noted on Sheet 7(27).

Contractor shall remove only those portions of existing concrete slope protection at existing abutments and piers necessary to construct new abutments and piers. Required temporary shoring shall be designed by a professional Engineer licensed in the Commonwealth of Virginia. Design calculations and drawings shall be submitted to the Engineer for approval. Contractor shall replace concrete slope protection in accordance with Section 415 of the VDOT Road and Bridge Specifications. Costs for the temporary shoring shall be included in the unit price for slope protection.

Bridge No. of existing bridge is 1851. Plan No. is 165-16

B.M.: Metal VDOT disk set in concrete and stamped 118-0039, located approx. 128 ft north of existing bridge in median between ramps.

CITY OF LYNCHBURG, VIRGINIA

PROPOSED BRIDGE REPLACEMENT FOR KEMPER STREET (RTE. 460) OVER LYNCHBURG EXPRESSWAY (RTE. 29A) 0.1 MI. S.E. OF INT. 16th STREET

PLAN NO. 1851BR

Date: Sept. 13, 2013

COMMONWEALTH OF VIRGINIA
CHAD M. THOMAS
Lic. No. 036962
PROFESSIONAL ENGINEER

MATTERN & CRAIG
ROANOKE, VA
STRUCTURAL ENGINEER

PLANS BY:	Mattern & Craig
COORDINATED:	Steven A. Campbell
SUPERVISED:	Steven R. Alvis
DESIGNED:	M.L. Fizzano/P.F. Cardwell
DRAWN:	Darren K. Allen
CHECKED:	Chad M. Thomas

Mattern & Craig
CONSULTING ENGINEERS • SURVEYORS
701 FIRST STREET S.W.
ROANOKE, VIRGINIA 24016
(540) 345-9342
FAX (540) 345-7691

No.	Description	Date

REVISIONS

For Table of Revisions, see Sheet 2.

STATE	FEDERAL AID ROUTE	FEDERAL AID PROJECT	STATE ROUTE	STATE PROJECT	SHEET NO.
VA.	—	—	29	U000-118-204, C-501, B-601	7(3)

ESTIMATED QUANTITIES - SUBSTRUCTURE ONLY

		Concrete Class A3 CY	Reinforcing Steel LB	Corrosion Resistant Reinf. Steel, Class I LB	Struct. Excav. CY ⊗	Concrete Slab Slope Protec. 4" SY ⊗	Select Matl. TY. I Min. CBR-30 TON ⊗	Geocomposite Wall Drain SY ⊗
Abutment A	Neat	26.8	—	2,930	—	—	—	59
	Footing	51.3	3,850	—	540	29	1056	—
Pier 1	Neat	76.5	—	23,190	—	—	—	—
	Footing	124.4	11,550	—	247	81	—	—
Pier 2	Neat	66.4	—	17,950	—	—	—	—
	Footing	116.7	10,490	—	239	82	—	—
Abutment B	Neat	36.1	—	3,330	—	—	—	76
	Footing	55.2	4,250	—	636	29	1246	—
Total		553.4	30,140	47,400	1662	221	2302	135

⊗ Denotes items to be paid for on the basis of plan quantities in accordance with current Road and Bridge Specifications.

LUMP SUM BID ITEMS

Mobilization	LS
Construction Surveying	LS
Dismantle and Remove Existing Structure Number 1851	LS
Waterline system	LS

ESTIMATED QUANTITIES - SUPERSTRUCTURE ONLY

Item		Units	Quantity
Concrete Class A4		CY	359.5
Corrosion Resistant Reinf. Steel, Class I	⊗	LB	92,100
Bridge railing	⊗	LF	349
Prestressed Concrete Beam, Bulb-T, 45" depth, +30'-40'	⊗	EA	10
Prestressed Concrete Beam, Bulb-T, 45" depth, +40'-50'	⊗	EA	10
Prestressed Concrete Beam, Bulb-T, 45" depth, +90'-100'	⊗	EA	10
Bridge Deck Grooving	⊗	SY	889.1

⊗ Denotes items to be paid for on the basis of plan quantities in accordance with current Road and Bridge Specifications.

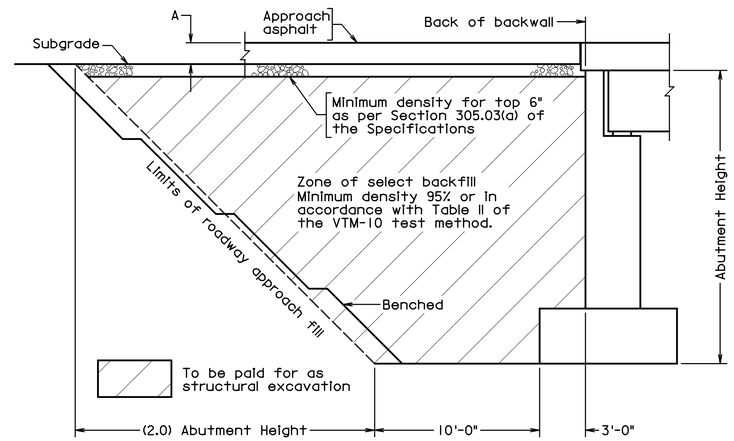

SECTION THROUGH ABUTMENT

Abutment drainage not shown
Not to scale

GENERAL NOTES (CONT'D):

The project includes concrete substructure surface repairs for the adjacent bridge No. 8000, Campbell Ave. over Route 29 Expressway, in areas of the abutments as directed by the engineer.
Pay Item: Concrete Substructure Surface Repairs
Quantity: 5 SY

The waterline and pipe supports on the existing structure is designated as a Type B structure in accordance with Section 411 of the Specifications.

Notes:

The location of utilities, including underground utilities, is indicated on the drawings insofar as their existence and location were known at the time of preparation of the drawings. However, nothing in these contract documents shall be construed as a guarantee that such utilities are in the location indicated or that they actually exist, or that other utilities are not within the area of operations.

The Contractor shall make necessary investigations to determine the existence and locations of such utilities. The Contractor shall pay for any damage to and for maintenance of protection of existing utilities and structures including water services, sewer laterals, telephone, power, and fiber optic lines.

Before the work is started, the Contractor shall notify all companies, corporations, municipalities, and individuals who own utilities on the construction site, in the right-of-way or immediately adjacent to the construction area if those utilities may be affected by the work. The Contractor shall arrange to have the various utilities located and to have them removed or relocated as required, or to determine the method of protection acceptable to the respective owner, if the method of protection is not specified hereinafter. Any cost incurred with removing, relocating or protecting utilities shall be borne by the Contractor unless indicated otherwise. The Contractor shall work with and assist the city (or utility owner) by coordinating all utility relocation operations.

All utilities which are damaged or misaligned shall be repaired or replaced by the respective utility company(s) and/or the City of Lynchburg at the expense of the Contractor.

The Contractor shall coordinate all work within the vicinity of existing utilities (water, gas, etc.) with the respective utility company. All coordination of utility service is the responsibility of the Contractor. The work shall be conducted in accordance with the rules and regulations of the respective utility company. Temporary bracing or supports shall be installed as needed to sufficiently support and/or protect utility lines, etc. during construction, and any damage to the utilities/conduits shall be repaired at the contractor's expense. All methods for supporting and maintaining the existing utilities shall be subject to the approval of the respective utility company and the owner. Any utilities removed as part of the work, and not indicated to be removed or abandoned, shall be restored using materials and installation equal to the utility's and/or the City of Lynchburg standards.

Material in the abutment select backfill zone shall be Select Material Type I, minimum CBR 30 and shall be compacted in accordance with Sections 303 and 305 of the Specifications.

In cut situations, material with strength characteristics greater than the select backfill may be left in place.

The final depth A of the embankment side slopes shall be regular embankment material placed and finished as required.

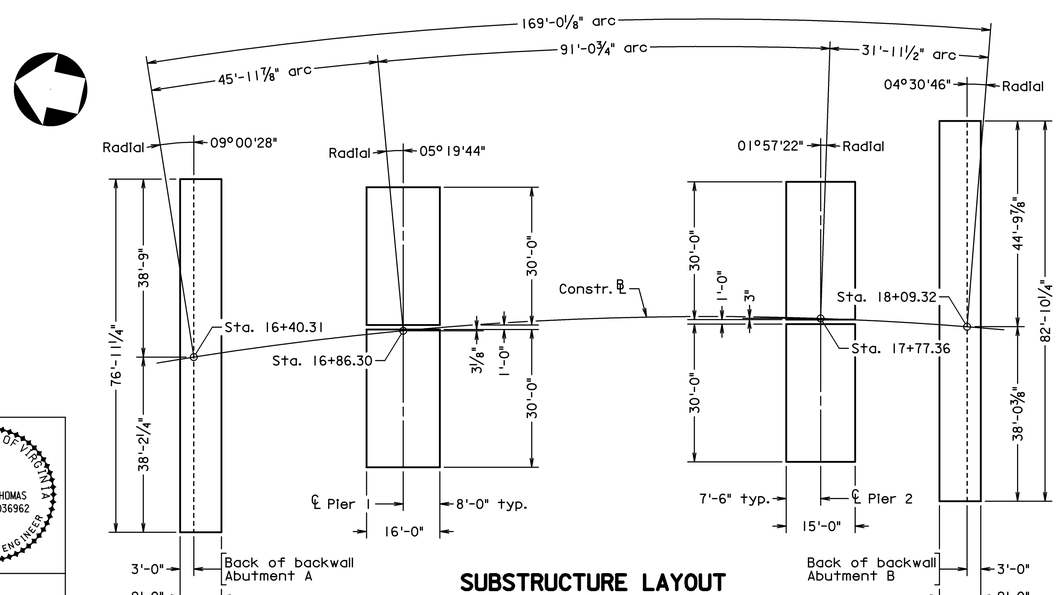

SUBSTRUCTURE LAYOUT

Scale: 1/16" = 1'-0"

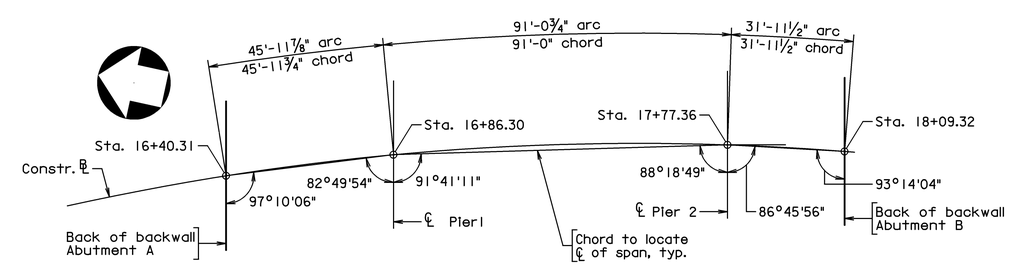

BRIDGE LAYOUT

Scale: 1" = 20'

701 FIRST STREET S.W.
ROANOKE, VIRGINIA 24016
(540) 345-9392
FAX (540) 345-7691

Mattern & Craig
CONSULTING ENGINEERS • SURVEYORS

b1851003

COMMONWEALTH OF VIRGINIA
CHAD M. THOMAS
Lic. No. 036962
PROFESSIONAL ENGINEER

MATTERN & CRAIG
ROANOKE, VA
STRUCTURAL ENGINEER

No.	Description	Date
	Revisions	

BRIDGE REPLACEMENT
KEMPER STREET OVER LYNCHBURG EXPRESSWAY

CITY OF LYNCHBURG, VIRGINIA

ESTIMATED QUANTITIES BRIDGE LAYOUT SUBSTRUCTURE LAYOUT

Designed: SRA
Drawn: DKA
Checked: CMT

Date	Plan No.	Sheet No.
Sept. 2013	1851BR	3 of 34

STATE	FEDERAL AID ROUTE	FEDERAL AID PROJECT	STATE ROUTE	STATE PROJECT	SHEET NO.
VA.	—	—	29	U000-118-204, C-501, B-601	7(4)

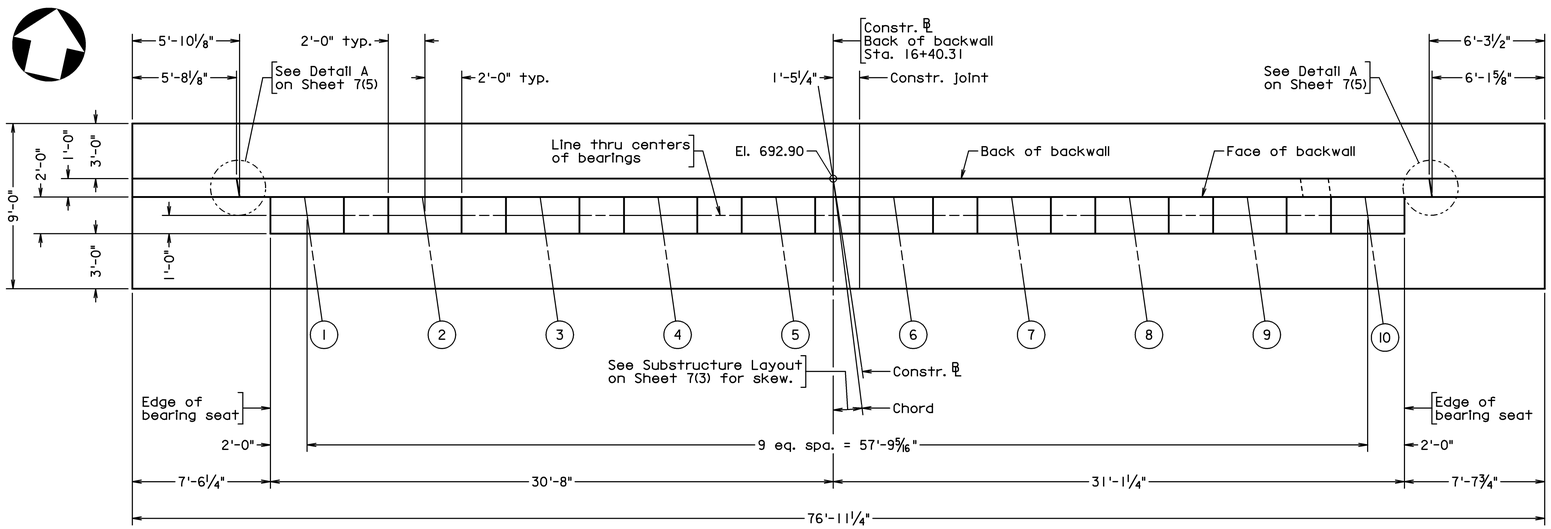

PLAN

Scale: ¼" = 1'-0"

Notes:

1. For anchor bolt layout, see Sheet 7(5).
2. For details of the deck extension, see Sheet 7(12).
3. For waterline penetration locaiton and elevation, see Sheet 7(26).
4. AH series bars placed during Construction Phase One shall have mechanical couplers capable of developing 125% of the strength of the spliced bars. The contractor shall submit samples of his proposed splice system to the engineer for review and approval. Welded splices may not be substituted for mechanical couplers. The cost of mechanical couplers shall be included in the bid price for corrosion resistant reinforcing steel. The contractor shall coordinate bar length requirements for the splice system used with reinforcing steel.

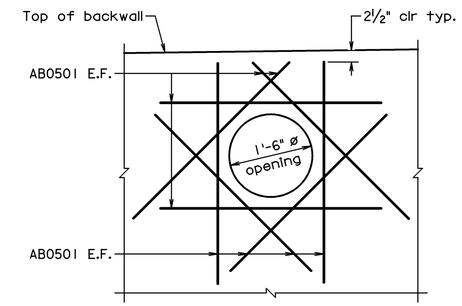

PIPE PENETRATION DETAIL

Not to scale
(Wall reinf. not shown for clarity)

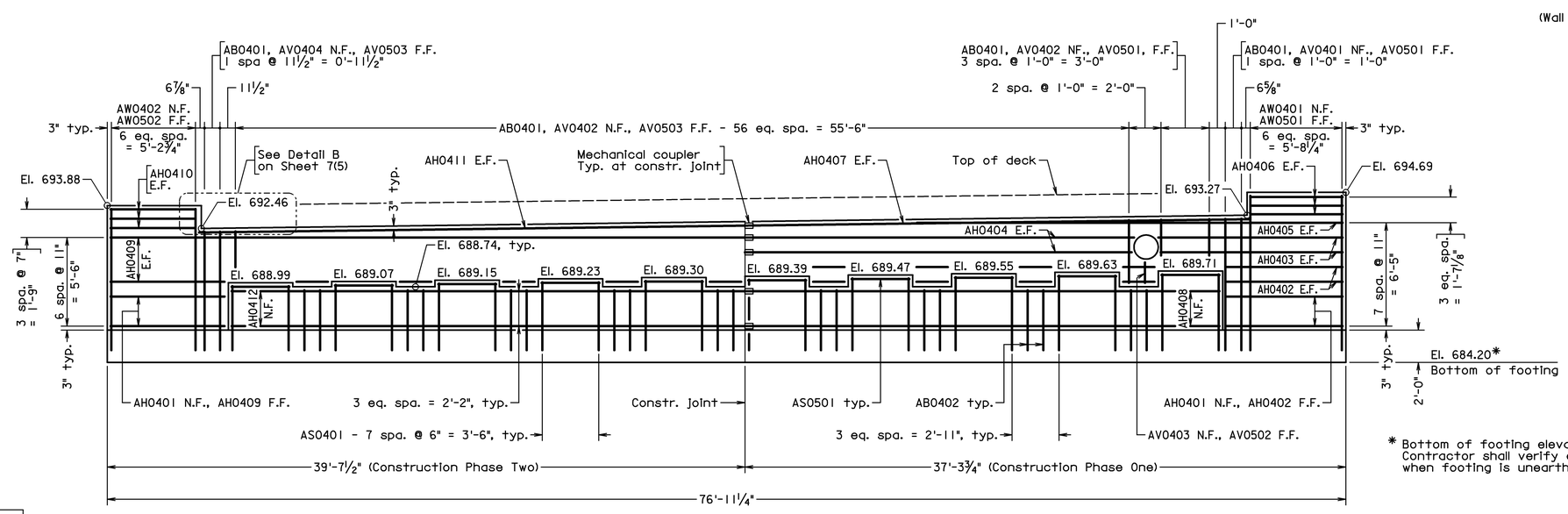

ELEVATION

Scale: ¼" = 1'-0"

* Bottom of footing elevation shall match existing. Contractor shall verify existing footing elevation when footing is unearthed.

Mattern & Craig
CONSULTING ENGINEERS • SURVEYORS
701 FIRST STREET S.W.
ROANOKE, VIRGINIA 24016
(540) 342-6292
FAX (540) 345-7691

b1851004

COMMONWEALTH OF VIRGINIA
CHAD M. THOMAS
Lic. No. 036962
PROFESSIONAL ENGINEER

MATTERN & CRAIG
ROANOKE, VA
STRUCTURAL ENGINEER

No.	Description	Date
	Revisions	

BRIDGE REPLACEMENT
KEMPER STREET OVER LYNCHBURG EXPRESSWAY

CITY OF LYNCHBURG, VIRGINIA

ABUTMENT A PLAN & ELEVATION

Designed: SRA	Date	Plan No.	Sheet No.
Drawn: DKA	Sept. 2013	1851BR	4 of 34
Checked: CMT			

STATE	FEDERAL AID ROUTE	FEDERAL AID PROJECT	STATE ROUTE	STATE PROJECT	SHEET NO.
VA.	—	—	29	U000-118-204, C-501, B-601	7(5)

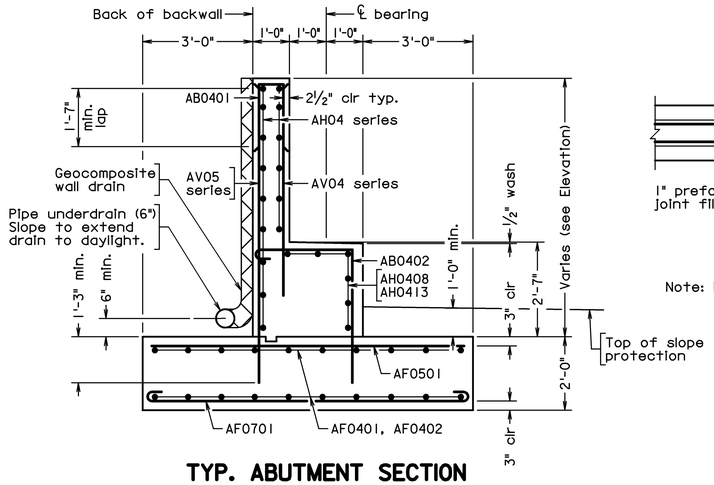

TYP. ABUTMENT SECTION
Scale: ½" = 1'-0"

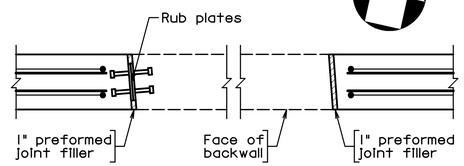

DETAIL A
Scale: ¾" = 1'-0"

Note: For details of rub plates, see Rub Plate Detail

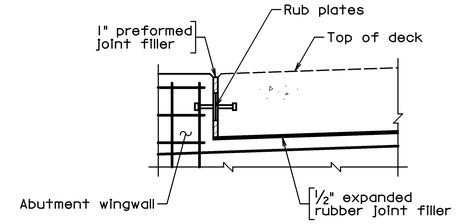

DETAIL B
Scale: ¾" = 1'-0"

Note: For details of rub plates, see Rub Plate Detail

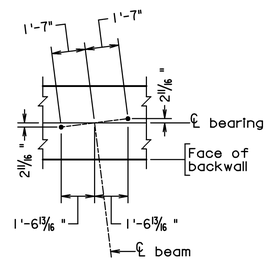

ANCHOR BOLT LAYOUT
Not to scale

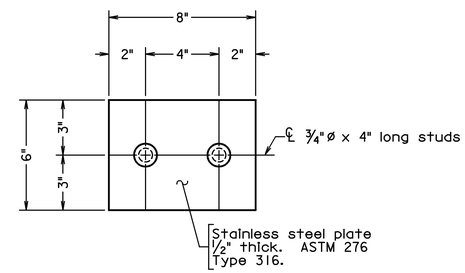

RUB PLATE DETAIL
Not to scale

Notes:

1. The rub plates shall be centered horizontally on the wingwall and centered vertically on the deck extension.
2. The ½" expanded rubber joint filler shall extend the full length of the deck slab extension.
3. For plan and elevation of abutment, see Sheet 7(4).
4. For details of the deck extension, see Sheet 7(12).
5. AH series bars placed during Construction Phase One shall have mechanical couplers capable of developing 125% of the strength of the spliced bars. The contractor shall submit samples of his proposed splice system to the engineer for review and approval. Welded splices may not be substituted for mechanical couplers. The cost of mechanical couplers shall be included in the bid price for reinforcing steel. The contractor shall coordinate bar length requirements for the splice system used with reinforcing steel.
6. Cost of the rub plates, joint filler, porous backfill and pipe underdrain (6") shall be included in the price bid for substructure concrete.

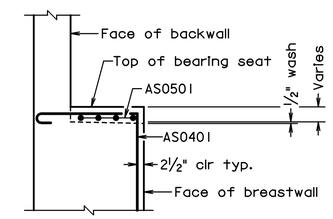

TYP. BEARING SEAT SECTION
Scale: ½" = 1'-0"

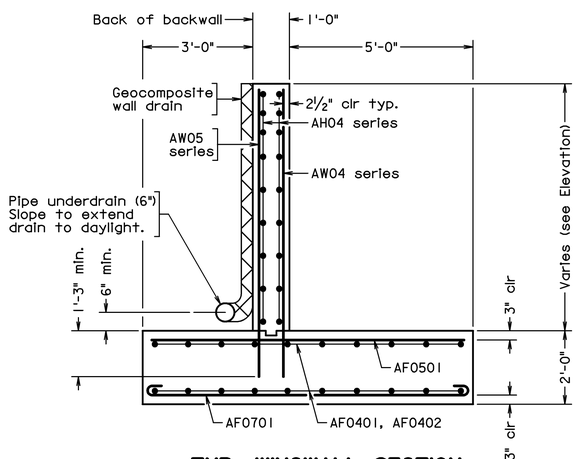

TYP. WINGWALL SECTION
Scale: ½" = 1'-0"

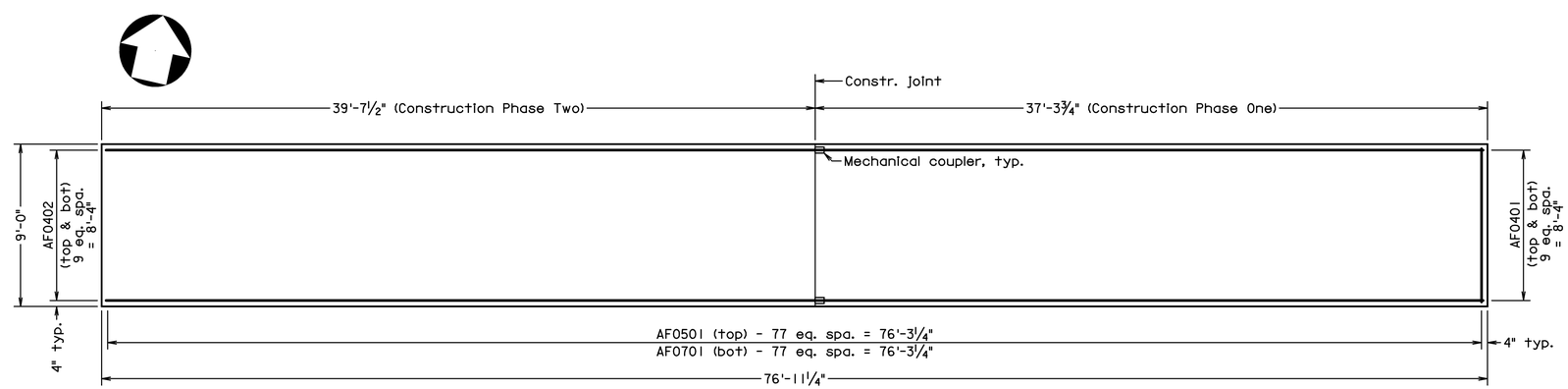

FOOTING PLAN
Scale: ¼" = 1'-0"

Mattern & Craig
CONSULTING ENGINEERS • SURVEYORS
701 FIRST STREET S.W.
ROANOKE, VIRGINIA 24016
(540) 345-6392
FAX (540) 345-7631

b1851005

COMMONWEALTH OF VIRGINIA
CHAD M. THOMAS
Lic. No. 036962
PROFESSIONAL ENGINEER

MATTERN & CRAIG
ROANOKE, VA
STRUCTURAL ENGINEER

No.	Description	Date

Revisions

BRIDGE REPLACEMENT
KEMPER STREET OVER LYNCHBURG EXPRESSWAY

CITY OF LYNCHBURG, VIRGINIA

ABUTMENT A DETAILS & FOOTING PLAN

Designed: SRA
Drawn: DKA
Checked: CMT

Date	Plan No.	Sheet No.
Sept. 2013	1851BR	5 of 34