PROJECT MANUAL
FOR
CITY OF LYNCHBURG

Kemper Street Bridge Replacement Project

BID : 14-886

November 2013

PROCUREMENT DIVISION
3RD FLOOR CITY HALL
900 CHURCH STREET
LYNCHBURG, VA 24504
TELEPHONE (434) 455-3970
FAX (434) 845-0711

Table of Contents

Document **Page #**

Bidding Requirements

Advertisement For Bids 2

Bid-Form 3

Escrow Account Election 5

Equal Opportunity Report Statement 6

Statement Of Experience 7

Statement Of Available Resources 8

Corporate Status Form 9

Questions To Bidders/Offerors 10

Construction Agreement 11

City Of Lynchburg, Virginia Standard Performance Bond 13

City Of Lynchburg Standard Labor And Material Payment Bond 15

Escrow Agreement 18

Instructions To Bidders 22

General Conditions…….…..27

Specifications…….85

Attachments

DRAWINGS SHEETS
CROSS SECTION PLANS

ADVERTISEMENT FOR BIDS

Sealed bids for the **Kemper Street Bridge Replacement Project**, will be received by the City of Lynchburg, Procurement Division, City Hall, Lynchburg, VA, until **3:00 p.m., January 9, 2014**, and then publicly opened and read in the Bidder's Room, Third Floor, City Hall.

This project includes all labor, material, and equipment for the Kemper Street Bridge Relocation Project.

The Project Manual and Drawings for this project may be viewed and downloaded from the City's website: http://www.lynchburgva.gov/current-solicitations

An Optional pre-bid conference will be held at 3:00 P.M. on December 10, 2013 in the Bidders Room, Third Floor, City Hall 900 Church Street, Lynchburg, VA.

Contact Lisa Moss at (434) 455-4228; fax: (434) 845-0711; email:lisa.moss@lynchburgva.gov for further information. All requests for clarification or questions regarding this bid must be received no later than 2:00 p.m. on December 18, 2013.

BID FORM

Lisa MossProcurement Division
City of Lynchburg
Third Floor, City Hall
900 Church Street
Lynchburg, Virginia 24504

Dear Ms. Moss:

The undersigned, as bidder, hereby declares that the only persons interested in this bid as principal, or principals, is or are named herein and that no person other than herein mentioned has any interest in this bid or in the Construction Agreement to be entered into; that this bid is made without connection with any other person, company, or parties making a bid; and that it is in all respects fair and in good faith, without collusion or fraud.

The undersigned, having visited and examined the site and having carefully studied all the Contract Documents, including without limitation, all drawings and specifications pertaining to "**Kemper Street Bridge Replacement Project** " for the City of Lynchburg, Virginia, hereby proposes to furnish all labor, equipment, materials, and services and to perform all operations necessary to execute and complete the Work required for the project, in strict accordance with the Contract Documents together with Addenda numbered_____ through _____ issued during bidding period and hereby acknowledged, subject to the terms and conditions of the Construction Agreement:

It is understood and agreed that the Owner, in protecting its best interests, reserves the right to reject any or all bids or waive any defects. Any changes, erasures, modifications, deletions in the bid form, or alternate proposals not specified in the Advertisement for Bids may make the bid irregular and subject to rejection.

The listed bid items are to contain all necessary costs required for completion of the Work in accordance with the Contract Documents.

If the Construction Agreement is for unit prices and not for a lump sum price, it is understood that all quantities listed on the following pages are estimated quantities, and the Owner reserves the right to raise, lower, or eliminate any quantity or item, and in any case, the unit prices shall be used in determining partial and final payment. It is further understood that costs to cover all components of the Work as described in the Contract Documents are included in this bid, even in cases where specific line items are not identified.

We are properly equipped to execute all work of the character and extent required by the Contract Documents, and we will enter into the Construction Agreement for the execution and completion of the Work in accordance with the Contract Documents; and we further agree that, if awarded the Construction Agreement, we will commence the Work on the date stated in the "Notice to Proceed" and will maintain a work force large enough to execute the Work and all obligations no later than the completion date stated in the Contract Documents.

Enclosed herewith is the following Security, offered as assurance that the undersigned will enter into the Construction Agreement for the execution and completion of the Work in accordance with the Contract Documents:

Bidder's Certified Check issued by_____(name of bank) in the amount of:

$ _____(5% of Base Bid amount)

Bidder's Bid Bond for 5% of Base Bid Amount Issued by _____
(name of surety authorized to do business in Virginia).

The undersigned hereby agrees, if awarded the Construction Agreement, to execute and deliver to the City within ten (10) days after his receipt of the Notice of Award, a performance bond and a payment bond, in forms satisfactory to the City, from sureties authorized to do business in Virginia satisfactory to the City, in the amount of one hundred (100) percent of the Base Bid.

NO.	VDOT ITEM CODE	ITEM DESCRIPTION	UNIT	ESTIMATED QUANTITY	UNIT PRICE	TOTAL ESTIMATED
1.	00100	MOBILIZATION	1	LS		
2.	67350	NS WATER LINE SYSTEM	1	LS		
3.	60120	STRUCTURE EXCAVATION	1662	CY		
4.	60403	CONCRETE CLASS A3	554	CY		
5.	60410	CONCRETE CLASS A4	360	CY		
6.	60490	BRIDGE DECK GROOVING	889	SY		
7.	61219	PRESTRESSED CONC. BULB-T 45" DEPTH, +30'-40'	10	EA		
8.	61220	PRESTRESSED CONC. BULB-T 45" DEPTH, +40'-50'	10	EA		
9.	61225	PRESTRESSED CONC. BULB-T 45" DEPTH, +90'-100'	10	EA		
10.	61700	REINFORCING STEEL	30,140	LB		
11.	61704	CORROSION RESISTANT REINFORCING STEEL CLASS I	139,500	LB		
12.	62045	STEEL RAILING	349	LF		
13.	64005	SELECT MATERIAL TYPE I MIN. CBR-30	2,302	TON		
14.	69500	STRUCTURE 8000 SUBSTRUCTURE SURFACE REPAIRS	5	SY		
15.	02110	NS GEOCOMPOSITE WALL DRAIN	135	SY		
16.	67260	DISMANTLE & REMOVE EXIST. STRUCTURE (STR NO.1851)	1	LS		
17.	69740	CONCRETE SLAB SLOPE PROTECTION, 4"	221	SY		
18.	00101	CONSTRUCTION SURVEYING	1	LS		
19.	00111	CLEARING AND GRUBBING	1	LS		
20.	00120	EARTHWORK	1	LS		
21.	00525	CONCRETE CLASS A3 MISC.	3	CY		
22.	00529	FLOWABLE BACKFILL	18	CY		
23.	01152	15" CONC PIPE	611	LF		
24.	06740	DROP INLET DI-7A	1	EA		
25.	06817	DROP INLET DI-3B, L=12'	2	EA		
26.	06818	DROP INLET DI-3B, L=6'	3	EA		
27.	06819	DROP INLET DI-3B, L=8'	5	EA		
28.	06820	DROP INLET DI-3B, L=10'	1	EA		
29.	06822	DROP INLET DI-3B, L=14'	1	EA		

NO.	VDOT ITEM CODE	ITEM DESCRIPTION	UNIT	ESTIMATED QUANTITY	UNIT PRICE	TOTAL ESTIMATED
30.	06826	DROP INLET DI-3BB, L=6'	1	EA		
31.	16516	FLEXIBLE PVMT TIE-IN PLANING (0-2" DEPTH)	220	SY		
32.	13611	IMPACT ATTENUATOR SERVICE (35 MPH)	2	EA		
33.	09056	MANHOLE MH 1 OR 2	7	LF		
34.	09057	FRAME & COVER MH-1	1	EA		
35.	10128	AGGR. BASE MAT'L. TY I NO 21B	6,575	TN		
36.	10612	ASPH. CONC. BASE CR. TY BM-25.0	3,042	TN		
37.	10611	ASPH. CONC. TY IM-19.0D	917	TN		
38.	10636	ASPH. CONC. TY SM-9.5D	797	TN		
39.	12020	STD CURB CG-2	773	LF		
40.	12022	RAD CURB CG-2	612	LF		
41.	12600	STD COMB CURB & GUTTER CG-6	1,138	LF		
42.	12610	RAD COMB CURB & GUTTER CG-6	813	LF		
43.	13108	CG-12 DETECTABLE WARNING SURFACE	4	SY		
44.	13220	HYDR CEMENT CONC SIDEWALK 4"	550	SY		
45.	13320	STD GUARDRAIL GR-2	2,025	LF		
46.	13315	GUARDRAIL TERMINAL STD GR-11	5	EA		
47.	13345	ALT. BREAKAWAY CABLE TERMINAL GR-9	4	EA		
48.	13383	FIXED OBJECT ATTACH. GR-FOA-1 TY I	3	EA		
49.	13384	FIXED OBJECT ATTACH. GR-FOA-1 TY II	2	EA		
50.	13609	IMPACT ATTEN. SER. TY III (TL-2, 45 MPH MAX)	1	EA		
51.	21021	MOD. MEDIAN STRIP MS-1A	94	SY		
52.	21110	MEDIAN STRIP MS-1A	601	SY		
53.	13421	MEDIAN BARRIER MB-3	60	LF		
54.	21110	PAVED DITCH MOD PG-2A, TYPE E	465	LF		
55.	24000	OBSCURING ROADWAY	82	UNIT		
56.	24100	ALLAYING DUST	822	HR		
57.	24152	TYPE III BARRICADE 8'	9	EA		
58.	24160	CONSTRUCTION SIGNS	728	SF		
59.	24278	GROUP 2 CHANNELIZING DEVICES	162,756	DAY		

NO.	VDOT ITEM CODE	ITEM DESCRIPTION	UNIT	ESTIMATED QUANTITY	UNIT PRICE	TOTAL ESTIMATED
60.	24281	ELECTRONIC ARROW	10,522	HR		
61.	06751	NS DROP INLET D1-2B, L=12'	1	EA		
62.	50900	NS SIGN POST STP-1, 2 3/16"	53	LF		
63.	50900	NS SIGN POST STP-1, 2 1/2"	420	LF		
64.	50900	NS SPD-3 SIGN POST	187	LF		
65.	51248	NS CONC. FOUNDATION SSP-VIA	13	EA		
66.	24340	NS WORK ZONE TRAFFIC CONTROL MANAGEMENT	1	LS		
67.	14260	CRUSHER RUN AGGR. NO. 25 OR 26	500	TN		
68.	67210	NS ASPHALT CONCRETE PATCH 6"	40	SY		
69.	24288	WARNING LIGHT TY B	162,760	DAY		
70.	24296	TRAFFIC BARRIER SERVICE CONC. SINGLE FACE	620	LF		
71.	24430	DEMOLITION OF PAVEMENT (FLEXIBLE)	12,338	SY		
72.	25506	FIELD OFFICE TY I	18	MO		
73.	26116	DRY RIP RAP CL A-I	41	TN		
74.	27012	TOPSOIL CLASS A 2"	2	AC		
75.	27102	REGULAR SEED	338	LBS		
76.	27103	OVERSEEDING	211	LBS		
77.	27104	LEGUME SEED	53	LBS		
78.	27105	LEGUME OVERSEEDING	33	LBS		
79.	27215	FERTILIZER (15-30-15)	1	TN		
80.	27250	LIME	8	TN		
81.	27415	CHECK DAM (ROCK) TY II	24	EA		
82.	27430	SILTATION CONTROL EXCAVATION	1,105	CY		
83.	27451	INLET PROTECTION TYPE A	3	EA		
84.	27461	INLET PROTECTION TYPE B	23	EA		
85.	27505	TEMP. SILT FENCE	5,140	LF		
86.	27345	TEMPORARY DIVERSION DIKE	1,463	LF		
87.	85012	OUTLET PROTECTION	8	EA		
88.	27580	TEMPORARY SEDIMENT BASIN EXCAVATION	58	CY		
89.	40081	8" DI WATER MAIN	21	LF		

NO.	VDOT ITEM CODE	ITEM DESCRIPTION	UNIT	ESTIMATED QUANTITY	UNIT PRICE	TOTAL ESTIMATED
90.	40101	10" DI WATER MAIN	605	LF		
91.	41008	8" GATE VALVE & BOX	1	EA		
92.	41010	10" GATE VALVE & BOX	2	EA		
93.	41104	ADJUST EXIST VALVE BOX	2	EA		
94.	41403	8"x8" TAPPING SLEEVE VALVE & BOX	1	EA		
95.	41409	10"x10" TAPPING SLEEVE VALVE & BOX	2	EA		
96.	41412	16"x10" TAPPING SLEEVE VALVE & BOX	1	EA		
97.	42765	ADJUST EXIST FRAME & COVER	1	EA		
98.	50108	SIGN PANEL	1,593	SF		
99.	50430	SIGN POST STP-1, 2" SQ 10 GA.	228	LF		
100.	50490	CONC. FOUNDATION STP-1	56	EA		
101.	50900	STREET SIGNS	32	SF		
102.	22643	FENCE STD FE-CL	300	LF		
103.	22663	CORNER BRACE UNIT STD FE-CL	4	EA		
104.	51030	CONTROLLER	2	EA		
105.	51160	ELEC. SERVICE GROUNDING ELECTRODE 10'	2	EA		
106.	51180	TRAFFIC SIGNAL HEAD SECT. 12" STD	40	EA		
107.	51248	CONCRETE FOUNDATION SIGNAL POLE PF-8	4	EA		
108.	51245	CONCRETE FOUNDATION CF-1	2	EA		
109.	51386	SIG. POLE MP-1 30' COMB LUMIN. ONE ARM 24'	1	EA		
110.	51392	SIG. POLE MP-1 30' COMB LUMIN. ONE ARM 30'	2	EA		
111.	51394	SIG. POLE MP-1 30' COMB LUMIN. ONE ARM 32'	1	EA		
112.	51396	SIG. POLE MP-1 30' COMB LUMIN. ONE ARM 34'	2	EA		
113.	51425	LUMINAIRE ARM, 18'	5	EA		
114.	51597	8/2 CONDUCTOR CABLE	42	LF		
115.	51603	14/5 CONDUCTOR CABLE	1,659	LF		
116.	51607	14/7 CONDUCTOR CABLE	284	LF		
117.	51614	SIAMESE CABLE	1,204	LF		
118.	27300	SOD	233	SY		

NO.	VDOT ITEM CODE	ITEM DESCRIPTION	UNIT	ESTIMATED QUANTITY	UNIT PRICE	TOTAL ESTIMATED
119.	52000	NS SIGNAL POLE MP-1 25'	1	EA		
120.	51234	CONC. FOUNDATION SIGNAL POLE PF-1	1	EA		
121.	38953	NS LANDSCAPE TREES	79	EA		
122.	38953	NS LANDSCAPE SHRUBS	2,860	EA		
123.	38953	NS LANDSCAPE GROUNDCOVERS	2,727	EA		
124.	28810	NS LANDSCAPE 3" SHREDDED HARDWOOD MULCH	280	SY		
125.	38953	NS LANDSCAPE 30 MIL PVC CHECK DAMS	4	EA		
126.	56055	NS LANDSCAPE 4" DIA PERF. PVC UNDERDRAIN	40	LF		
127.	38953	NS LANDSCAPE BIORETENTION MEDIA MIX	197	CY		
128.	00490	NS LANDSCAPE CLASS I BACKFILL MATERIAL	105	TN		
129.	38953	NS LANDSCAPE COBBLE WEIR (D50=8" ROCK)	28	CY		
130.	24420	NS LANDSCAPE CONCRETE SLAB DEMOLITION	58	SY		
131.	38953	NS LANDSCAPE CONCRETE WEIRS	4	EA		
132.	38953	NS LANDSCAPE DOUBLE WASHED AGGREGATE	224	CY		
133.	38953	NS LANDSCAPE DUCTILE IRON INLET GRATE	2	EA		
134.	38953	NS LANDSCAPE EXCAVATION-STEP POOL	135	CY		
135.	13232	NS LANDSCAPE GEOTEXTILE DRAINAGE FABRIC	40	SY		
136.	38953	NS LANDSCAPE OVERFLOW INLET MODIFICATIONS RG-2	1	LS		
137.	38953	NS LANDSCAPE OVERFLOW INLET MODIFICATIONS RG-3	1	LS		
138.	38953	NS LANDSCAPE PRECAST CONCRETE WALLS	110	LF		
139.	00120	NS LANDSCAPE REGULAR EXCAVATION	558	CY		
140.	38953	NS LANDSCAPE SAND FILL (FILTER BED AREA)	60	CY		
141.	38953	NS LANDSCAPE SANDSTONE BOULDERS	18	CY		
142.	38953	NS LANDSCAPE TEMPORARY SEEDING	200	SY		
143.	38953	NS LANDSCAPE TREE PROTECTION FENCING & STAKES	1,329	LF		

NO.	VDOT ITEM CODE	ITEM DESCRIPTION	UNIT	ESTIMATED QUANTITY	UNIT PRICE	TOTAL ESTIMATED
144.	38953	NS LANDSCAPE TREE REMOVAL (COMPL. ROOT SYSTEM)	41	EA		
145.	38953	NS LANDSCAPE TREE REMOVAL (GRIND TO GRADE)	11	EA		
146.	38953	NS LANDSCAPE WOOD CHIPS (1" SURFACE)	1	CY		
147.	38953	NS LANDSCAPE WOOD CHIPS (30% MIX IN FILTER BED)	25	CY		
148.	51830	HANGER ASSEMBLY SM-3, ONEWAY	12	EA		
149.	51840	HANGER ASSEMBLY SMD-2	8	EA		
150.	52000	TRAFFIC SIGNALIZATION EMERGENCY PREEMPTION (3-WAY)	2	LS		
151.	52000	TEMPORARY SIGNALIZATION	2	LS		
152.	52000	TRAFFIC SIGNAL. ADAPTIVE TRAFFIC CONTROL SYSTEM	3	LS		
153.	52001	TRAFFIC SIGNALIZATION NO. 8 BONDED GROUND	836	LF		
154.	52002	ELEC. SERVICE SE-3, TYPE B	2	EA		
155.	52002	TRAFFIC SIGNALIZATION FURNISH MONITOR	3	EA		
156.	54020	TYPE A PAVE. LINE MARKING 4"	7,465	LF		
157.	54022	TYPE A PAVE. LINE MARKING 6"	1,420	LF		
158.	54024	TYPE A PAVE. LINE MARKING 8"	714	LF		
159.	54040	PREFORMED 12" THERMOPLASTIC	125	LF		
160.	54042	PREFORMED 24" THERMOPLASTIC (STOP BAR)	135	LF		
161.	54105	ERADICATION OF EXIST PAVEMENT MARKING	4,000	LF		
162.	54300	PAVE. MESS. MARK. ELONGATED ARROW (SINGLE)	9	EA		
163.	54512	CONSTR. PAVE. MARK (TY.D CL - II) 4"	8,000	LF		
164.	54552	CONSTR. PAVE. MARKING (TY F) 4"	8,000	LF		
165.	55140	CONCRETE FOUNDATION LF-1 TY A	16	EA		
166.	55501	LUMINAIRE 150 WATT H.P.S.	11	EA		
167.	55586	JUNCTION BOX JB-S1	46	EA		
168.	55587	JUNCTION BOX JB-S2	5	EA		
169.	55588	JUNCTION BOX JB-S3	4	EA		

NO.	VDOT ITEM CODE	ITEM DESCRIPTION	UNIT	ESTIMATED QUANTITY	UNIT PRICE	TOTAL ESTIMATED
170.	56020	1" CONDUIT	44	LF		
171.	56030	2" CONDUIT	3,983	LF		
172.	56034	3" CONDUIT	33	LF		
173.	56200	TRENCH EXCAVATION ECI-1	2,750	LF		
174.	56205	TEST BORE	16	EA		
175.	59000	LIGHTING POLE 16' ORNAMENTAL	11	EA		
176.	85013	TEMPORARY SEEDING	100	LBS		
177.	51963	SIGN REMOVAL	16	EA		
178.	51248	CONCRETE FOUNDATION LF-1 (MOD)	11	EA		
179.	24702	NS REMOVE LIGHT & POLE	30	EA		
180.	59001	NS CONDUCTOR CABLE #1/0	7,062	LF		
181.	52002	NS THERMAL DETECTION SYSTEM	7	EA		
182.	54100	PREFORMED 12"X18" THERMOPLASTIC (YIELD SYMBOL)	8	EA		
183.	59060	NS QUEUE DETECTION SYSTEM	1	LS		
184.	54042	PREFORMED 24" (DIAG) THERMOPLASTIC	204	LF		
185.	25565	BASELINE PROGRESS SCHEDULE	1	LS		
186.	25567	PROGRESS SCHEDULE UPDATE	24	EA		
187.	00700	POST INSTALLATION INSPECTION	611	LF		
188.	11070	SAW CUT, 6"	1,350	LF		
189.	54075	TYPE B CLASS VI CONTRAST PAVEMENT LINE MARKING 4"	550	LF		
190.	24505	NS RELOCATE EXIST LIGHT POLE	16	EA		
191.		RECORD DRAWINGS	1	LS		

TOTAL BASE BID: $

*** AN EXCEL COPY OF THIS BID FORM IS AVAILABLE. IT IS THE RESPONSIBILITY OF THE CONTRACTOR TO ENSURE ACCURACY WHEN COMPLETING THE BID FORM.***

The undersigned further agrees that, in case of failure on his part to execute the said Construction Agreement within the ten (10) days after written notice being given on the award of the Construction Agreement or the failure to deliver the required performance and payment bonds within the ten (10) days, the monies payable by the Security accompanying this bid shall be paid to the City of Lynchburg, Virginia, as liquidated damages for such failure; otherwise the Security accompanying this Bid shall be returned to the undersigned.

Attached herewith are completed Statement of Experience and Statement of Resources forms which include the information requested.

The undersigned further certifies that this bid is not the result of, or affected by, any act of collusion with another person engaged in the same line of business, or any act punishable under the Virginia Governmental Frauds Act, or other law.

This bid remains valid and may not be withdrawn for a period of 60 days from this date.

CURRENT VIRGINIA CLASS A CONTRACTOR'S LICENSE/ REGISTRATION NO.:_____

Respectfully submitted,

_____
CONTRACTOR

_____
DATE

_____

_____
ADDRESS

BY:_____

ITS:_____
(Title)

ELECTION OF ESCROW ACCOUNT PROCEDURE FOR RETAINAGE

If determined to be the successful low bidder(s), the above signed elects to use the Escrow Account Procedure for retainage.

_____

Write “Yes” or “No” on above line

If the successful bidder elects to use the Escrow Account Procedure for Retainage, the "Escrow Agreement" form shall be executed and submitted to the City of Lynchburg Engineering Division within fifteen (15) calendar days after notification. If the "Escrow Agreement" form is not submitted within the fifteen (15) day period, the Contractor shall forfeit his rights to the use of the Escrow Account Procedure.

Company_____

Authorized Signature_____

EQUAL OPPORTUNITY REPORT STATEMENT

The Bidder shall complete the following statement by checking the appropriate blank as follows.

The Bidder has_____ has not _____ participated in a previous contract subject to the nondiscrimination clause prescribed by Executive Order 10925, dated March 6, 1961, or Executive Order 11114 dated June 22, 1963.

In conjunction with the City of Lynchburg's policy to utilize Minority and Disadvantaged Business Enterprises ("DBE") wherever possible, the Bidder has solicited quotations for labor, material and/or services from the following Minority and Disadvantaged Business Enterprises:

NAME OF FIRM	PERSON(S) CONTACTED	DATE

Of those listed above, we intend, at this time, to utilize the following in the completion of the Work required by this Construction Agreement:

_____

_____

_____

"This firm assures that it will give its best efforts to utilize Minority and Disadvantaged Business Enterprises whenever possible."

CERTIFIED BY: _____(Signature)

_____(Typed/Printed name & Title)

BIDDER'S NAME: _____

TAXPAYER IDENTIFICATION NUMBER:_____

_____This firm will perform all construction with its own employees and, therefore, is not required to solicit quotations from DBEs.

FAILURE TO DOCUMENT AND REPORT DBE CONTACTS ON THIS FORM MAY BE A BASIS FOR REJECTION OF THE BID AS NONCONFORMING.

STATEMENT OF EXPERIENCE

Proposer: _____

_____

How Long In Business:_____ At Current Address: _____

Principals: _____Title:_____

_____Title:_____

_____Title:_____

Type of Work Normally Performed:_____

_____

Projects of this type previously completed:

1._____

_____ Amount $_____

2._____

_____ Amount $_____

3._____

_____ Amount $_____

Reference (for Projects listed above):

1._____

_____ Tel.No._____

2._____

_____ Tel.No._____

3._____

_____ Tel No._____

STATEMENT OF AVAILABLE RESOURCES

Equipment:_____

_____

_____

Number of Personnel Currently Employed:_____

Number of Personnel Available for Project:_____

Other Pertinent Information:_____

_____

_____

_____

_____

_____

_____

_____

CORPORATE STATUS FORM

ALL PROSPECTIVE FIRMS MUST RESPOND TO THE FOLLOWING

If a limited liability company, limited liability partnership or a limited partnership, indicate by checking one: _____Limited liability company

_____Limited liability partnership

_____Limited partnership

Have you registered with the Virginia State Corporation Commission, to conduct business in Virginia?
☐ Yes ☐ No

Name and address of organizer: _____

_____

_____

_____

List who is authorized to execute contracts:

_____

If conducting business under an assumed (fictitious) business name, fill out the following information:

Names of persons or entities owning business using assumed business name:_____

Owners' addresses: _____

Registration date: _____ Expires: _____

If conducting business as a sole proprietorship, general partnership, or joint venture, fill out the following information:

Names of all persons liable for obligations of the business: _____

Addresses of such persons:_____

Questions to Bidders/Offerors

Bidders/Offerors are to respond to the following question: Have any of the individual(s), owner(s), and/or principal officer(s) of the firm submitting the bid/proposal ever been convicted of (1) a felony, or (2) a misdemeanor involving moral turpitude?

YES _____ NO _____

If yes, list individual or officer and title and give details.

_____

_____

_____

_____

_____

_____

_____

_____

NOTE: Answering yes to this question will not necessarily exclude your company from consideration but will be used to weigh the relationship between the offense and the contract to be performed.

Is your firm currently involved in litigation or a dispute involving arbitration?

YES _____ NO _____

If yes, for litigation list the litigation by case name, name of court, case number, and jurisdiction, and for arbitration, list the organization administering, if any, its contact information, any case number assigned, the arbitrators, and the location of the arbitration. For litigation and arbitration, briefly describe the claims and status, and give contact information for the opposing party or parties.

_____

_____

_____

_____

CONSTRUCTION AGREEMENT

This Construction Agreement (the "Contract") made and entered into on the _____ day of _____, 2014, by and between _____, party of the first part, hereinafter referred to as Contractor, and the City of Lynchburg, a municipal corporation of the Commonwealth of Virginia, party of the second part, hereinafter referred to as the Owner or City.

That the Contractor, for the consideration hereinafter fully set out, hereby agrees with the Owner as follows:

1. That the Contractor shall furnish all labor, materials, tools, and equipment and perform all Work required by the Contract Documents (as defined in the General Conditions hereto) for the Kemper Street Bridge Replacement Project.

2. That the Contractor shall commence Work within ten (10) days after Notice to Contractor to Proceed with the Work under Contract ("Notice to Proceed"), and shall substantially complete the project within **630 calendar days**. Owner and Contractor recognize that time is of the essence of this Contract and that the Owner will suffer financial loss if the Work is not completed within the times specified in the Notice to Proceed, plus any extensions thereof. They also recognize the delays, expense and difficulties involved in providing the actual loss suffered by Owner if the Work is not completed on time. Accordingly, instead of requiring any such proof, Owner and Contractor agree that as liquidated damages for certain losses Owner is expected to suffer due to delay (but not as a penalty) Contractor shall pay **$150.00** for each day that expires after the time specified for completion. If the Contractor is subject to liquidated damages, the City has the right, but not the obligation, to withhold the liquidated damages from the Contractor's regular payments or retainage. Rights and obligations relating to these liquidated damages are set out more fully in the General Conditions.

3. The Owner hereby agrees to pay the Contractor for the faithful performance of this Contract in accordance with the Contract Documents, subject to additions and deductions as provided in the Contract Documents, in lawful money of the United States, as follows:

_____Dollars

($_____)

4. The Owner shall make partial payment on a monthly basis to the Contractor in accordance with the Contract Documents on the basis of a duly certified and approved estimate of work performed during the preceding calendar month by the Contractor, less five percent (5%) of the amount of such estimate which may be retained by the Owner until all Work has been performed strictly in accordance with the Contract Documents and until such Work has been accepted by the Owner.

5. Within ninety (90) days after submission by the Contractor of evidence satisfactory to the Owner that all payrolls, material bills and other costs incurred by the Contractor in connection with the construction of the Work have been paid in full, satisfaction of all the requirements of the Contract Documents, and acceptance of such Work by the Owner, final payment on account of this Contract shall be made.

6. It is further mutually agreed between the parties hereto that if, at any time after the execution of this Contract, the performance bond provided for its faithful performance and the payment bond, the Owner shall deem the surety or sureties upon such bonds or either of them to be unsatisfactory, or if for any reason, such bonds cease to be adequate to cover the performance of the Work, the Contractor shall,

at his own sole expense, within five (5) days after the receipt of Notice from the Owner so to do, furnish an additional bond or bonds in such form and amount, and with such surety or sureties as shall be satisfactory to the Owner. In such event, no further payment to the Contractor shall be deemed to be due under this Contract until such new or additional security for the faithful performance of the Work shall be furnished in manner and form satisfactory to the Owner.

7. Contractor agrees to fulfill all requirements of state, Federal, and municipal laws which may be applicable to this project.

8. This Contract is subject to the General Conditions accompanying it, and all the documents defined by the General Conditions to be the Contract Documents are a part of this Contract.

This Contact is executed in two counterparts, each of which shall, without proof or accounting for the other counterparts, be deemed an original contract.

IN WITNESS WHEREOF, _____ has caused its name to be subscribed to this Contract by _____, its _____, and its corporate seal to be hereunto affixed and attested by _____, its _____, said officers being duly authorized therefore; and the City of Lynchburg has caused its name to be hereunto subscribed by L. Kimball Payne, City Manager, and its corporate seal to be hereunto affixed and attested by Valeria Chambers, its Clerk of Council, said officers being duly authorized therefore, all as to the day and year first above written.

CONTRACTOR

BY: _____

ITS: _____

(SEAL)

_____
ATTEST:

_____

CITY OF LYNCHBURG

(SEAL)

BY:_____
City Manager

_____
ATTEST:

_____
Clerk of Council

CITY OF LYNCHBURG, VIRGINIA
STANDARD PERFORMANCE BOND

KNOW ALL MEN BY THESE PRESENTS: That_____ _____, the Contractor ("Principal"), whose principal place of business is located at _____ _____and_____ _____("Surety"), are held and firmly bound unto the City of Lynchburg, Virginia, the Owner ("Obligee"), in the amount of

_____Dollars ($_____) for the payment whereof Principal and Surety bind themselves, their heirs, executors, administrators, successors and assigns, jointly and severally, firmly by these presents.

WHEREAS,

Principal has, entered into a Construction Agreement with Obligee for certain work on a construction project known as Kemper Street Bridge Replacement Project, which contract (the "Contract") is by reference expressly made a part hereof;

NOW, THEREFORE, THE CONDITION OF THIS OBLIGATION is such that, if the Principal shall promptly and faithfully perform said Contract in strict conformity with the plans, specifications and conditions of the Contract and its Contract Documents, then this obligation shall be null and void; otherwise it shall remain in full force and effect.

Provided, that any alterations which may be made in the terms of the Contract, or in the Work to be done under it, or the giving by the Obligee of any extension of time for the performance of the Contract, or any other alterations, extensions or forbearance on the part of either or both of the Obligee or the Principal to the other shall not in any way release the Principal and the Surety, or either of them, their heirs, executors, administrators, successors or assigns, from their liability hereunder, notice to the Surety of any such alterations, extensions, or forbearance being hereby waived.

No action shall be brought on this bond unless brought within one year after: (a) completion of the Contract and all Work thereunder, including expiration of all warranties and guarantees, or (b) discovery of the defect or breach of warranty or guarantee if the action be for such.

The Surety represents to the Principal and to the Obligee that it is legally authorized to do business in the Commonwealth of Virginia.

Signed and sealed this_____day of _____, 2014.

_____(SEAL)
Contractor/Principal

By:_____

Witness:_____ Title:_____

_____(SEAL)
Surety

By:_____
Attorney -in-Fact

My Power of Attorney is recorded in the Clerks Office of the Circuit Court of_____,
Virginia in Deed Book_____, Page_____, and has not been revoked.

_____
Attorney-in-Fact

AFFIDAVIT AND ACKNOWLEDGEMENT OF ATTORNEY-IN-FACT

COMMONWEALTH OF VIRGINIA
(or, alternatively, Commonwealth or State of_____)

CITY/COUNTY OF_____to wit:

I, the undersigned notary public, do certify that_____personally appeared before me in the jurisdiction aforesaid and made oath that he is the attorney-in-fact of_____, the Surety, that he is duly authorized to execute on its behalf the aforesaid Bond(s) as its act and deed.
Given under my hand this_____day of_____2014.

_____(SEAL)
Notary Public

My Commission expires:_____

APPROVED:

_____
City Attorney/Designee Date

CITY OF LYNCHBURG
STANDARD LABOR AND MATERIAL PAYMENT BOND

KNOW ALL MEN BY THESE PRESENTS: That _____

_____, the Contractor ("Principal") whose principal

place of business is located at_____

_____and_____

_____("Surety") are held and firmly bound unto the City of Lynchburg,

Virginia, the Owner ("Obligee") in the amount of_____ Dollars

($_____) for the payment whereof Principal and Surety bind themselves, their heirs,

executors, administrators, successors and assigns, jointly and severally, firmly by these presents.

WHEREAS,

Principal has by written agreement dated_____entered into a Construction Agreement

with Obligee for Kemper Street Bridge Replacement Project.

which contract (the “Contract”) is by reference expressly made a part hereof;

NOW THEREFORE, THE CONDITION OF THIS OBLIGATION is such that, if the Principal shall promptly make payment to all claimants as hereinafter defined, for labor performed and material furnished in the prosecution of the Work provided for in the Contract and its Contract Documents, then this obligation shall be void~~,~~; otherwise it shall remain in full force and effect, subject, however, to the following conditions.

The Principal and Surety, jointly and severally, hereby agree with Obligee as follows:

1. A claimant is defined as one having a direct contract with the Principal or with a subcontractor of the Principal for labor, material, or both for use in the performance of the Contract. A "subcontractor" of the Principal, for the purposes of this bond only, includes not only those subcontractors having a direct contractual relationship with the Principal but also any other contractor who undertakes to participate in the Work which the Principal is to perform under the aforesaid Contract, whether there are one or more intervening subcontractors contractually positioned between it and the Principal (for example, a subcontractor). "Labor" and "material" shall include, but not be limited to, public utility services and reasonable rentals of equipment, but only for periods when the equipment rented is actually used at the Work site.

2. Subject to the provisions of paragraph 3, any claimant who has performed labor or furnished material in accordance with the Contract Documents in the prosecution of the Work provided in the Contract, who has not been paid in full therefore before the expiration of ninety (90) days after the day on which such claimant performed the last of such labor or furnished the last of such materials for which he claims payment, may bring an action on this bond to recover any amount

due him for such labor or material, and may prosecute such action to final judgment and have execution on the judgment. The Obligee need not be a party to such action and shall not be liable for the payment of any costs, fees or expenses of any such suit.

3. Any claimant who has a direct contractual relationship with any subcontractor of the Principal from whom the Principal has not required a subcontractor payment bond, but who has no contractual relationship, express or implied, with the Principal, may bring an action on this bond only if he has given written notice to the Principal within one hundred eighty (180) days from the day on which the claimant performed the last of the labor or furnished the last of the materials for which he claims payment, stating with substantial accuracy the amount claimed and the name of the person for whom the Work was performed or to whom the material was furnished. Notice to the Principal shall be served by registered or certified mail, postage prepaid, in an envelope addressed to the Principal at any place where his office is regularly maintained for the transaction of business. Claims for sums withheld as retainages with respect to labor performed or materials furnished shall not be subject to the time limitations stated in this paragraph 3.

4. No suit or action shall be commenced hereunder by any claimant.

   a. Unless brought within one year after the day on which the person bringing such action last performed labor or last furnished or supplied materials, it being understood, however, that if any limitation embodied in this bond is prohibited by any law controlling the construction hereof, the limitation embodied within this bond shall be deemed to be amended so as to be equal to the minimum period of limitation permitted by such law.

   b. Other than in a Virginia court of competent jurisdiction, with venue as provided by statute, or in the United States District Court for the district in which the project, or any part thereof is situated.

5. The amount of this bond shall be reduced by and to the extent of any payment or payments made in good faith hereunder.

6. This bond is intended to comply with the requirements and to afford all the benefits of a payment bond consistent with the requirements of Virginia Code § 2-2-4337 and § 2-2-4341. To the extent that those sections as they are in effect as of the date of issuance of this bond confer any requirements on Principal or Surety, or confer any additional benefits on any claimant (as the term “claimant” is used within either the meaning of those sections or this bond), those requirements and benefits shall be deemed to be incorporated into and be part of this bond.

Signed and sealed this_____ day of_____.

_____(SEAL)
Contractor/ Principal

By: _____

Witness: _____ Title: _____

_____(SEAL)
Surety

By: _____
Attorney-in-Fact

Typed Name: _____

My Power of Attorney is recorded in the Clerks Office of the Circuit Court of_____ Virginia in Deed Book_____, Page_____, and has not been revoked.

_____
Attorney-in-Fact

AFFIDAVIT AND ACKNOWLEDGEMENT OF ATTORNEY-IN-FACT

COMMONWEALTH OF VIRGINIA

(or, alternatively, Commonwealth or State of_____)

CITY / COUNTY OF _____

I, the undersigned notary public, do certify that_____personally appeared before me in the jurisdiction aforesaid and made oath that he is the attorney-in-fact of _____, the Surety, that he is duly authorized to execute on its behalf the foregoing bond pursuant to the Power of Attorney noted above, and on behalf of said Surety, acknowledged the aforesaid bond(s) as its act and deed.

Given under my hand this_____day of _____.

_____(SEAL)

Notary Public

_____

My Commission expires: _____

APPROVED:

_____
City Attorney/Designee Date

ESCROW AGREEMENT

THIS AGREEMENT ("Agreement"), made and entered into this ____ day of _____, 2014 by,

between and among the City of Lynchburg ("City"), _____ ("Contractor"), and

_____
(Name of Bank)

_____
(Address of Bank)

a trust company, bank, or savings and loan institution with its principal office located in the Commonwealth of Virginia (hereinafter referred to as "Bank" or "Escrow Agent"), and _____

_____ ("Surety") provides:

I.

The City and the Contractor have entered into the Construction Agreement ("Contract") with respect to City Project No. and Name: Kemper Street Bridge Replacement Project ("the Contract"). This Agreement is pursuant to, but in no way amends or modifies, the Contract. Payments made hereunder or the release of funds from escrow shall not be deemed approval or acceptance by the City of performance by the Contractor or Surety.

II.

In order to assure full and satisfactory performance by the Contractor of its obligations under the Contract, the City may, pursuant to the Contract Documents, retain certain amounts otherwise due the Contractor. The Contractor has, with the approval of the City, elected to have these retained amounts held in escrow by the Bank. This Agreement sets forth the terms of the escrow. The Bank shall not be deemed a party to, bound by, or required to inquire into the terms of, the Contract or any other instrument or agreement between the City and the Contractor.

III.

The City may from time to time pursuant to this Agreement pay to the Bank amounts retained by the City under the Contract. Except as to amounts actually withdrawn from escrow by the City, the Contractor shall look solely to the Bank for payment of funds retained under the Contract and paid by the City to the Bank.

The risk of loss by diminution of the principal of any funds invested under the terms of this Agreement shall be solely upon the Contractor.

Funds and securities held by the Bank pursuant to this Agreement shall not be subject to levy, garnishment, attachment, lien, or other process whatsoever. Contractor agrees not to assign, pledge, discount, sell or otherwise transfer or dispose of his interest in the escrow account or any part thereof, except to the Surety.

IV.

Upon receipt of checks or warrants drawn by the City's Director of Finance and made payable to it as escrow agent, the Bank shall promptly notify the Contractor, negotiate the same and deposit or invest and reinvest the proceeds in "Approved Securities" within the meaning of this Agreement in accordance with the written instruction of the Contractor. In no event shall the Bank invest the escrowed funds in any security that is not an "Approved Security."

V.

The following securities, and none other, are Approved Securities for all purposes of this Agreement:

(1) United States Treasury Bonds, United States Treasury Notes, United States Treasury Certificates of Indebtedness or United States Treasury Bills,

(2) Bonds, notes and other evidences of indebtedness unconditionally guaranteed as to the payment of principal and interest by the United States,

(3) Bonds or notes of the City,

(4) Bonds of any political subdivision of the City, if such bonds carried, at the time of purchase by the Bank or deposit by the Contractor, a Standard and Poor's or Moody's Investors Service rating of at least "A", and

(5) Certificates of deposit issued by commercial Banks located within the Commonwealth, including, but not limited to, those insured by the Bank and its affiliates,

(6) Any bonds, notes, or other evidences of indebtedness listed in Section (1) through (3) may be purchased pursuant to a repurchase agreement with a Bank, within or without the City ,having a combined capital, surplus and undivided profit of not less than $25,000,000 provided the obligation of the Bank to repurchase is within the time limitations established for investments as set forth herein. The repurchase agreement shall be considered a purchase of such securities even if title, and/or possession of such securities is not transferred to the Escrow Agent, so long as the repurchase obligation of the Bank is collaterized by the securities themselves, and the securities have on the date of the repurchase agreement a fair market value equal to at least 100 percent of the amount of the repurchase obligation of the Bank, and the securities are held by a third party, and segregated from other securities owned by the Bank.

No security is an Approved Security hereunder if it matures more than five years after the date of its purchase by the Bank or deposit by the Contractor.

VI.

The Contractor may from time to time withdraw the whole or any portion of the escrowed funds by depositing with the Bank Approved Securities in an amount equal to, or in excess of, the amount so withdrawn. Any securities so deposited or withdrawn shall be valued at such time of deposit or withdrawal at the lower of par or market value, the latter as determined by the Bank. Any securities so deposited shall thereupon become a part of the escrowed fund.

Upon receipt of a direction signed by the City's Director of Public Works or the City Engineer, the Director of Finance or the City Accountant shall authorize the Bank to pay the principal of the fund, or any specified amount thereof, to the account of the City of Lynchburg. Such payment shall be made in cash as soon as is practicable after receipt of the direction.

Upon receipt of a direction signed by the City's Director of Public Works or the City Engineer, the Director of Finance or the City Accountant shall authorize the Bank to pay and deliver the principal of the fund, or any specified amount thereof, to the Contractor, in cash or in kind, as may be specified by the Contractor. Such payment and delivery shall be made as soon as is practicable after receipt of the direction.

VII.

For its services, hereunder the Bank shall be entitled to a reasonable fee in accordance with its published schedule of fees or as may be agreed upon by the Bank and the Contractor. Such fee and any other costs of administration of this Agreement shall be paid from the income earned upon the escrowed fund, and, if such income is not sufficient to pay the same, by the Contractor.

VIII.

The net income earned and received upon the principal of the escrowed fund shall first be paid or applied to pay the Bank's fee and any other costs of administration and such income shall be deemed a part of the principal of the fund. After all of the Bank's fees and other costs of administration have been paid from such income, the net income earned thereafter may then be paid over to Contractor in installments.

IX.

The Surety undertakes no obligation hereby but joins in this Agreement for the sole purpose of acknowledging that its obligations as surety for the Contractor's performance of the Contract are not affected hereby.

WITNESS the following signatures, all as of the day and year first above written.

CITY OF LYNCHBURG

BY: _____
City Manager

CONTRACTOR: _____

BY: _____
Officer, Partner, or Owner (Seal)

SURETY:

By: _____

Its: President (Seal)

ATTEST:

_____
Secretary

By: _____
Attorney-in-Fact

AFFIDAVIT AND ACKNOWLEDGEMENT OF ATTORNEY-IN-FACT

COMMONWEALTH OF VIRGINIA
(or, alternatively, Commonwealth or State of _____)
CITY / COUNTY OF _____

I, the undersigned notary public, do certify that _____personally appeared before me in the jurisdiction aforesaid and made oath that he is the attorney-in-fact of _____, the Surety, that he is duly authorized to execute on its behalf the foregoing bond pursuant to the Power of Attorney noted above, and on behalf of said Surety, acknowledged the aforesaid bond(s) as its act and deed.
Given under my hand this_____day of _____.

_____(SEAL)
Notary Public

My Commission expires: _____

APPROVED:

_____
City Attorney/Designee Date

INSTRUCTIONS TO BIDDERS

DESCRIPTION OF WORK:
The Work included under this Contract shall consist of all labor, materials, equipment, and the performance of all work necessary to complete the project known as "Kemper Street Bridge Replacement Project," as described in the Contract Documents. This Work shall be performed in accordance with the Contract Documents.

ACCEPTANCE AND GUARANTEE:
At the completion of the project, a final inspection will be made by the Owner's Project Manager. The Contractor will be notified of the remaining work to be performed. When the work is satisfactorily completed, notification will be given that the project has been accepted. The guarantee period will be one (1) year from date of acceptance.

1. General: Subject to Owner's right to waive informalities, to be valid for consideration, bids must be completed and submitted in accordance with these instructions to bidders. All individual bid unit price items must be filled in, regardless of the quantity shown.

2. Plans and Specifications: Bidding documents will be provided as indicated in the Advertisement for Bids.

3. Qualification of Bidders: Each bidder must be prepared to submit within five calendar days of the Owner's request written evidence of his qualifications for the project, including, without limitation, financial data, previous experience, resources, personnel and evidence of authority to conduct business in the jurisdiction where the project is located.

4. Examination of Bid Documents and Site:

   4.1 Before submitting bids, each bidder must examine bid documents, including, without limitation, all the Contract Documents, thoroughly; familiarize himself with Federal, state and local laws, ordinances, rules, codes, and regulations affecting the Work; and correlate his observations with requirements of the bid documents.

   4.2 Bidders are requested and expected to visit the site of the project to alert themselves to local and special conditions which may be encountered during construction of the project such as: labor and transportation, handling and storage of materials, the availability of materials, and site access. Failure to make such investigations shall not relieve the successful bidder from performing and completing the Work in accordance with the Contract Documents.

      a. A pre-bid conference will be held at the time and place stated in the Advertisement for Bids.

5. Clarification:

   5.1 No oral clarification of the bid documents will be made to any bidder. To be given consideration, requests for clarification must be received in time to allow preparation of a written response at least seven (7) days prior to date fixed for opening of bids. Clarifications will be issued in the form of written addenda to the bid documents and posted to the Procurement Website within five (5) days of the bid opening. Only clarifications by formal written addenda will be binding.

   (1) All communications in regard to clarifications and any other matters related to this project shall be addressed to: Lisa Moss, Procurement Division, 900 Church Street, Lynchburg, VA 24504, Fax: 434-845-0711, email: lisa.moss@lynchburgva.gov.

6. Substitutions:

   6.1 Substitutions of material or equipment or both may be offered by the Contractor with his bid, provided that, if approved:

a. No major changes in the construction or design intent of the project would be required. Changes required to accommodate substituted items shall be made by the Contractor at no additional cost or time delay.

b. Features of quality, capacity, construction, performance, appearance, size, arrangement, and general utility, including economy of operation of substitutes offered, either parallel or exceed those of specified products.

c. The provisions of the General Conditions are met, and the provisions of the General Conditions any other guarantees, if required by the specification sections, shall apply in full force and effect to the performance of such substitute products~~,~~ approved for incorporation into the Work.

6.2 Technical data covering the proposed substitution shall be furnished with the bid when possible, and not later than 10 days after bid submission.

7. Bid Submission:

7.1 Submit bids using forms furnished in the Project Manual and fill in all blank spaces on the form. Repeat notation "Contractor's Current Virginia License No._____" on outside of inner envelope containing bid and bid security, and place this envelope within another envelope addressed to:

City of Lynchburg
Procurement Division
900 Church Street
Third Floor, City Hall
Lynchburg, VA 24504

Bidders shall include the following with their bid submission:

- Bid Form
- Statement of Experience
- Statement of Available Resources
- Equal Opportunity Report Statement
- Corporate Status Form
- Questions to Offeror Form
- Bid Bond or Cashiers Check Equivalent

7.2 Both the inner and outer envelopes shall have noted thereon:

a. "Sealed Bid #14-886 Kemper Street Bridge Replacement Project.
b. The bidder's name and address; and
c. Repeat notation "Current Registered Virginia Contractor No. ____" on the outside envelope.

7.3 Each bid must be accompanied by a cashier's check payable to the City drawn on a bank satisfactory to the City, or a Bid Bond, in the amount of five percent (5%) of the amount of the total base bid, with the City as obligee, as assurance that the successful bidder will enter into the Contract within ten (10) days after Notice of Award.

If the successful bidder defaults by failure to enter into the Contract and to provide required performance and payment bonds, the certified check or Bid Bond accompanying the successful bid shall be collected by the City, not as a penalty but as liquidated damages for delays and such additional expenses as may be incurred by the City for reasons of such default.

7.4 Contractors will indicate a lump sum bid for on the bid form. The lump sum bid shall contain all necessary costs required for completion of the Work. Any changes, erasures, modifications, or deletions in the bid form, or alternate proposals not specified in the bid proposal may make the proposal irregular and subject to rejection.

7.5 Receipt deadline for bids will be as stated in the Advertisement for Bids.

7.6 Bids will be opened publicly in accordance with the Advertisement for Bids.

7.7 Withdrawal of bid after bid opening: To withdraw a bid after bid opening, a bidder must satisfy the substantive requirements of Va. Code §2.2-4330. In addition, the following procedures shall apply:

a. The bidder shall give notice in writing of his claim of right to withdraw his bid within two business days after the conclusion of the bid opening procedure and shall submit original work papers with such notice.

b. The mistake may be proved only from the original work papers, documents and materials used in preparation of the bid and delivered as required herein.

8. Bonds and Damages:

8.1 Bonds shall be with a surety company acceptable to the Owner~~.~~ that is legally authorized to do business in Virginia and in a form acceptable to Owner.

8.2 A performance bond and a labor and material payment bond will be required in the amount of 100 percent of the bid.

8.3 Liquidated damages shall be as indicated in the Contract Documents.

9. Award of Contract:

9.1 The award of the Contract will be the responsible bidder submitting the lowest responsive base bid.

Selection of the apparently successful bidder's responsibility will include a serious evaluation of whether the bidder has conscientiously attempted to meet Minority and Disadvantaged Business Enterprise goals. A requirement of the Contract bidder will be that a genuine concerted effort will be utilized to meet the Contract goal.

9.2 Before the Contract is awarded, the bidder submitting the lowest responsive bid must satisfy the City that it has the requisite organization, capital, equipment, ability, resources, personnel, management, business integrity, and at least five years experience in the type municipal work for which it has submitted a bid. Each bidder shall, with his bid, submit a list of at least five projects of similar size and dollar value completed within the last five years, giving location, dollar value, year completed, and the name(s) of the owner(s) and architect/engineers(s). The bidder shall verify to the City that it has the sufficient and qualified personnel to provide for the Contact Work. Failure by the lowest responsive bidder to sufficiently satisfy the City of its ability to meet any of the above requirements may serve as grounds for rejection of the bid.

9.3 The Owner reserves the right to cancel the Advertisement for Bids, reject any and all bids, waive any and all informalities, and disregard all conforming, nonconforming, conditional bids or counterproposals.

9.4 Unless canceled or rejected, a responsive bid from the lowest responsible bidder shall be accepted as submitted, except that if the responsive bid from the lowest responsible bidder exceeds available funds, pursuant to Section 18.1-9 of the Lynchburg Public Procurement Code, the Owner may negotiate with the apparent low bidder to obtain a contract price within available funds.

a. Procedures for Negotiations: If the Owner wishes to negotiate with the apparent low bidder to obtain a contract price within available funds, negotiations shall be conducted in accordance with the following procedures:

1. If the using agency wishes to conduct negotiations pursuant to this section, it shall provide the procurement administrator with a written determination that the bid from lowest responsive, responsible bidder exceeds available funds. This determination shall be confirmed in writing by the director of finance or his designee. The using agency shall also provide the procurement administrator with suggested measures to bring the proposed purchase within budget through negotiations with the lowest responsive, responsible bidder, including reductions in scope, changes in quality, value engineering, changes in terms and conditions, or changes in schedule.

2. The procurement administrator shall advise the lowest responsive, responsible bidder, in writing, that the proposed purchase exceeds available funds. He shall further invite proposed measures, such as a reduction in scope, change in quality, value engineering, changes in terms or conditions, or changes in schedule for the proposed purchase, and invite the lowest responsive, responsible bidder to amend its bid based upon the proposed measures to bring the purchase within available funds.

3. Informal discussions between the City and the lowest responsive, responsible bidder, either in person, by e-mail, by telephone, or by other means, may be used to attempt to obtain a contract within available funds.

4. Following any successful negotiations, the lowest responsive, responsible bidder shall submit a proposed addendum to its bid, which addendum shall include the specific changes in the proposed purchase, the reduction in price, and the new contract value. The addendum shall be reviewed by the purchasing agency, the City Manager, and City Attorney for acceptability.

5. If an addendum is acceptable to the City, the City may award a contract within funds available to the lowest responsive, responsible bidder based upon the amended bid proposal.

6. If the City and the lowest responsive, responsible bidder cannot negotiate a contract within available funds, all bids shall be rejected.

9.5 Protests of Award or Decisions to Award of Contract

a. The following are the exclusive procedures for a bidder or offeror to protest the City's award or decision to award a contract.

1. Any protest to award a contract shall be in writing and shall be delivered so that it is received by the City Manager not later than five (5) business days after announcement of the award or decision to award, whichever comes first. Otherwise any such protest shall be deemed to be waived.

2. Except for a protest of an emergency or sole source procurement, a protest of a City award or decision to award a contract may only be made by a person who submitted a bid or proposal for the procurement at issue and who was reasonably likely to have its bid or proposal accepted but for the City's decision. In the case of an emergency or sole source procurement, a protest may only be made by a person who can show that he was reasonably likely to have submitted a successful bid or proposal if the procurement had been other than emergency or sole source.

3. Protests shall only be granted if (1) the protester has complied fully with Sec. 18.1-6 of the Lynchburg Public Procurement Code and there has been a violation of law, the Lynchburg Public Procurement Code, or mandatory terms of the solicitation that clearly prejudiced the protestor in a material way, or (2) a statute requires voiding of the decision.

4. The City Manager shall issue a written decision on a protest within ten (10) days of its receipt by the City Manager.

5. If the protest is denied, the protestor may only appeal the denial or otherwise contest or challenge the procurement by then filing suit in the Lynchburg Circuit Court, Lynchburg, Virginia, and serving the city with such suit within ten (10) days of such denial. Otherwise, the City Manager's decision shall be final and conclusive, and the protester's right to appeal the denial or to otherwise contest or challenge the procurement shall be deemed to be waived.

6. Strictly following these procedures shall be a mandatory prerequisite for protest of the City's award or decision to award a contract. Failure by a bidder to follow these procedures strictly shall preclude that bidder's protest and be deemed to constitute a waiver of any protest.

b. A protest may not be based upon the alleged non-responsibility of a person to whom the City awards or makes a decision to award a contract.

10. Bidders are referred to the General Conditions for the meanings of capitalized terms.

End of Instructions to Bidders

GENERAL CONDITIONS

ARTICLE 1	CONTRACT DOCUMENTS AND DEFINITIONS
ARTICLE 2	ARCHITECT/ENGINEER
ARTICLE 3	OWNER
ARTICLE 4	CONTRACTOR
ARTICLE 5	SUBCONTRACTORS
ARTICLE 6	WORK BY OWNER OR BY SEPARATE CONTRACTORS
ARTICLE 7	MISCELLANEOUS PROVISIONS
ARTICLE 8	CONTRACT TIME
ARTICLE 9	PAYMENTS AND COMPLETION
ARTICLE 10	PROTECTION OF PERSONS AND PROPERTY
ARTICLE 11	INSURANCE FOR CONTRACTS
ARTICLE 12	CHANGES AND MODIFICATIONS IN THE WORK
ARTICLE 13	CLAIMS AND DISPUTE PROCEDURE
ARTICLE 14	UNCOVERING AND CORRECTION OF WORK
ARTICLE 15	TERMINATION OF THE CONTRACT

GENERAL CONDITIONS

ARTICLE 1 CONTRACT DOCUMENTS AND DEFINITIONS

1.1 DEFINITIONS

1.1.1 CONTRACT AND CONTRACT DOCUMENTS:
The Contract Documents include: (1) the Construction Agreement (the "Contract"), its General Conditions, its Special Conditions (if any) and its attachments (if any); (2) the City's Invitation for Bid No. 14-886 dated November 2013, and any addenda; (3) the Contractor's bid; (4) the Contract plans, drawings, and specifications and any addenda; and (5) any Modifications and any Field Orders. Any soils, geotechnical or other reports, surveys and analyses which may be made available to the Contractor for review or information under this Contract~~,~~ are not adopted by reference into, nor are they part of the Contract Documents.

1.1.2 MODIFICATION:
A Modification is (1) a written amendment to the Contract signed by both parties (Project Manager for City of Lynchburg and authorized agent for the Contractor), (2) a written Change Order signed by the Project Manager or Owner's authorized representative and an authorized agent for the Contractor, or (3) a written Change Directive signed by the Owner's authorized representative. Modifications may be made to the Contract and Contract Documents without notice to any surety for the performance or payment bonds for the Work. Any Modification that increases the Contract Sum by more than $50,000 or that causes total expenditures for the Contract to exceed the amount budgeted for the Contract may only be made with the specific approval of the City Manager.

1.1.3 WORK:
"Work" means the construction and services required by the Contract Documents and includes all services, plant, labor, materials, supplies, equipment and other things necessary for Contractor to carry out and complete the requirements of the Contract Documents. "Work" includes material suitably stored and protected. "Work" also includes any portion of the Work, whether completed or not.

1.1.4 PROJECT:
The Project is the total construction of which the Work performed by Contractor under the Contract Documents may be the whole or a part.

1.1.5 FURNISH, INSTALL & PROVIDE:
The terms "Furnish" or "Install" or "Provide", unless specifically limited in context, mean furnishing and incorporating a specified item, product or material into the Work, including all necessary labor, materials, equipment to make the item and the Work ready for use.

1.1.6 EXTRA WORK:
The term "Extra Work" as used herein, refers to and includes work required by the Owner, which, in the judgment of the Owner involves changes in or additions to the Work required by the Contract Documents in their then-existing form.

1.1.7 NOTICE OF AWARD:
"Notice of Award" is the written notice of the Owner's acceptance of the Contractor's bid given by the Owner to Contractor as the successful bidder.

1.1.8 NOTICE:
"Notice" means written notice made in the manner specified in this paragraph.

1.1.8.1 "Notice" shall be deemed to have been given to the Owner if sent to the following persons by the means indicated in 1.1.8.3 and either such Notice actually was received by such persons or adequate proof of receipt is made:

Department of Public Works Buildings and Grounds	Procurement Division	City Attorney
800 Orchard Street Lynchburg, Virginia 24501	3rd Floor, City Hall 900 Church Street Lynchburg, Virginia 24504	3rd Floor, City Hall 900 Church Street Lynchburg, Virginia 24504

1.1.8.2 "Notice" shall be deemed to have been given to the Contractor if sent to the following person by the means indicated in 1.1.8.3 and either such Notice was received by such person or the Contractor or adequate proof of receipt by such person or the Contractor is made:

(Insert Successful bidder authorized representatives name and address)

_____

1.1.8.3 "Notice" shall be sent by special courier, recognized overnight delivery service, or United States mail. With the exception of original bid documents, facsimile copies and e-mail shall be acceptable if the original is then sent by special courier, recognized overnight delivery service, or United States mail within three business days.

1.1.9 CHANGE DIRECTIVES:
If the parties cannot agree to a written amendment to the Contract or to a Change Order, Owner may, by issuance of a written "Change Directive," direct Contractor to perform Work that Owner acknowledges, or that Contractor contends, to be a change to the Work required by the Contract Documents. A change order signed by the Owner that Contractor fails or refuses to sign shall be considered a "Change Directive."

1.1.10 MISCELLANEOUS WORDS OR TERMS:
1.1.10.1 Whenever they refer to the Work or its performance, "directed", "required", "permitted", "ordered", "designated", "prescribed", and words of like import shall imply the direction, requirements, permission, order, designation or prescription of the Owner, and "approved", "acceptable", "satisfactory", "in the judgment of" and words of like import shall mean approved by or acceptable to or satisfactory to or in the judgment of the Owner.

1.1.10.2 The Contract Documents generally refer to the Owner, Contractor, Architect/Engineers, entities, and persons as if masculine in gender and singular in number. Such references are intended to include the feminine or neutral in gender and/or the plural in number when appropriate.

1.2 EXECUTION, CORRELATION AND INTENT OF CONTRACT DOCUMENTS

1.2.1 Two originals of the Contract shall be executed.

1.2.2 The intent of the Contract Documents is to include all items necessary for the proper execution and completion of the Work, including without limitation, all items reasonably inferable from the Contract Documents. The Contract Documents are complementary, and what is required by any one shall be as binding as if required by all. Words and abbreviations which have well-known technical or trade meanings are used in the Contract Documents in accordance with such recognized meanings.

1.2.3 Anything shown on the drawings and not mentioned in the specifications or mentioned in the specifications and not shown on the drawings shall have the same effect as if shown or mentioned respectively in both. Technical specifications take priority over general specifications, and detail drawings take precedence over general drawings. Contractor shall promptly notify the A/E and Owner of

any conflict or inconsistency in the Contract Documents, upon its discovery, and promptly submit an explanation in writing of the conflict or inconsistency to the A/E, with a copy to the Owner. The A/E's decision thereon shall be final. In case of conflict or inconsistency between the drawings and the specifications, the specifications shall govern.

1.2.4 Should any labor, material, or equipment be required which is not denoted in the drawings and specifications, but which is, nevertheless, reasonably necessary for the proper carrying out of the intent of the Work, it is agreed that the labor, material, or equipment is implied, and the Contractor shall provide such labor and furnish such materials and equipment as fully as if they were completely delineated and prescribed, without additional cost to the Owner.

1.2.5 The Contractor may be furnished additional instructions and detail drawings to carry out the Work included in the Contract Documents. The additional drawings and instructions thus supplied to the Contractor will coordinate with the Contract Documents and will be so prepared that they can be reasonably interpreted as a part thereof. The Contractor shall carry out the Work in accordance with the additional detail drawings and instructions.

1.2.6 The drawings and specifications are divided into sections for convenience and clarity only. The Contractor shall not construe this division as a division of the Work into various subcontractor units. The Contractor may subcontract the Work in such divisions as he sees fit, but he is ultimately responsible for furnishing all Work required by the Contract Documents.

1.2.7 The provisions of this Contract cannot be amended, modified, varied or waived in any respect that causes a change to the Contract Sum or Contract Time except by a Modification. **The Contractor is hereby given notice that no person has authority to orally waive, or to release the Contractor from any of the Contractor's duties or obligations under or arising out of the Contract Documents.** Any waiver, approval or consent granted by Modification or Field Order to the Contractor shall be limited to those matters specifically and expressly stated thereby to be waived, approved or consented to and shall not relieve the Contractor of the obligation to obtain any future waiver, approval or consent.

1.3 OWNERSHIP AND USE OF DOCUMENTS

1.3.1 All plans, drawings, specifications, and documents relating to the Work are the property of the Owner and are to be used only for the Project.

ARTICLE 2 ARCHITECT/ENGINEER

2.1 DEFINITIONS

2.1.1 The term Architect/Engineer, hereinafter "A/E" or "Architect" or "Engineer", shall mean the consulting firm or City Department/Division, or their duly authorized representatives, lawfully licensed to practice in Virginia, that is responsible for the activities specified herein.

2.1.2 Although the A/E is referred to throughout the Contract Documents as if singular in number and masculine in gender, A/E includes plural in number and feminine or neuter in gender, as appropriate.

2.2. ARCHITECT/ENGINEER SERVICES

2.2.1 The A/E will provide services as described in these General Conditions.

2.2.2 The A/E will advise and consult with the Owner. The Owner's instructions to the Contractor may be forwarded through the A/E. The A/E has authority to act on behalf of the Owner only to the extent

provided in the Contract Documents, and the A/E does not have authority to approve a change to the Contract Sum or the Contract Time.

2.2.3 The A/E may visit the site at intervals appropriate to the stage of construction to familiarize himself generally with the progress and quality of the Work and to determine in general if the Work is proceeding in accordance with the Contract Documents. Any visits or inspections by the A/E, any Owner's representative, or any consultant retained by the Owner are solely for the Owner's benefit and shall not confer any rights on Contractor or excuse Contractor from any obligation under the Contract Documents.

2.2.4 The A/E will immediately inform the Owner and Contractor whenever, in the reasonable opinion of the A/E, any of the Work is proceeding contrary to the requirements of the Contract Documents and will be unacceptable. Such notification by the A/E is solely for the benefit of the Owner and will not be a cause for the Contractor to claim either delay of the Work or any increase in the Contract Sum or Contract Time.

2.2.5 The A/E, the Owner and other governmental representatives shall at all times have access to the Project site and the Work regardless of its stage of progress. The Contractor shall provide facilities for such access so that the A/E, the Owner and other governmental representatives may perform their functions under the Contract Documents.

2.2.6 Where applicable, based on the A/E's observations and an evaluation of the Contractor's Applications for Payment, the A/E will recommend the amounts owing to the Contractor and will issue Certificates for Payment in such amounts, as provided in Article ~~9~~9, Payments and Completion.

2.2.7 The A/E will be an interpreter of the requirements of the Contract Documents. The A/E will render interpretations necessary for the proper execution and progress of the Work, with reasonable promptness and in accordance with any time limit agreed upon. Either party to the Contract may make written request to the A/E for such interpretations. All interpretations of the A/E shall be consistent with the intent of, and reasonably inferable from, the Contract Documents and will be in writing and/or in the form of drawings.

2.2.8 The A/E will recommend to the Owner the rejection of Work that does not conform to the Contract Documents. Whenever, in his opinion, he considers it necessary or advisable for the implementation of the intent of the Contract Documents, he will have authority to require special inspection or testing of the Work in accordance with Subparagraph 7.6.2 whether or not such Work be then fabricated, installed or completed.

2.2.9 The A/E will review and approve or take other appropriate action upon Contractor's submittals such as Shop Drawings, Product Data, Samples and Manuals, but only for conformance with the design concept of the Work and with the information given in the plans, drawings, and specifications. Contractor shall ensure that all submittals are complete and have had included with them all correlated items that the A/E requires for his review. In the A/E’s and Owner’s sole discretion, the A/E may decline to review partial submittals or submittals for which correlated items have not been included. Contractor shall clearly note, both in a cover letter with any submittal and on the submittal itself, any deviation or inconsistency of anything submitted with the requirements of the Contract Documents. The A/E's approval of a specific item shall not indicate approval of an assembly of which the item is a component. The A/E's review and approval is for the sole benefit of the Owner and is not for the benefit of the Contractor. The A/E's review and approval shall in no way excuse Contractor from fully complying with the Contract Documents.

2.2.10 The A/E's acceptance of materials or products on behalf of the Owner shall not bar future rejection of such items (a) if they are subsequently found to be defective or inferior in quality or uniformity to the materials or products specified by the Contract Documents, (b) if such materials or products are not as

represented by the Contractor, or (c) if such materials or products do not conform to the requirements of the Contract Documents.

2.2.11 As required, the A/E will conduct inspections to assist the Owner in determining the dates of Substantial Completion and Final Completion, will receive and forward to the Owner for the Owner's review written warranties and related documents required by the Contract Documents and assembled and submitted by the Contractor, and will recommend a final Certificate for Payment upon Contractor's full compliance with the requirements of Article 9, Payment and Completion.

2.2.12 All claims, disputes, or other matters or questions between the Contractor and Owner arising out of or relating to the A/E's interpretation of the Contract Documents or arising out of any other decisions, communications, or actions of the A/E relating to the performance of the Work shall be resolved as set forth in Article 12, Changes and Modifications in the Work, and Article 13, Claims.

2.2.13 In case of the termination of the employment of the A/E, the Owner shall appoint a new A/E, who shall have the same status under the Contract Documents as the former A/E.

ARTICLE 3 OWNER

3.1 DEFINITION

3.1.1 The Owner is the City of Lynchburg, Virginia ("City"). The term Owner means the Owner or its authorized representative. The Departmental Director, or his designee, is the authorized Owner's representative for this Contract. Notwithstanding the foregoing, the authority of the Owner's representative is subject to the limitations in the Lynchburg Public Procurement Code.

3.1.2 The Departmental Director, will designate a single Owner's representative, with the title of Project Manager (PM), who will have the power to act, within the scope of his delegated authority, for and on behalf of the Owner, in accordance with the terms of the Contract Documents.

3.1.3 For purposes of any change in the Work, the term "Owner" or "Owner's representative" specifically excludes any and all inspectors having building code or City ordinance responsibilities or jurisdiction under the requirements of the building permit for the Project.

3.2 INFORMATION POSSESSED BY OWNER

3.2.1 The Owner, as a courtesy, may make available for the Contractor's reasonable review, at the Owner's offices or together with the Contract Documents, certain boring logs, geotechnical, soils and other reports, surveys and analyses pertaining to the Project site. Any such information provided to the Contractor is intended to be for the Contractor's convenience only, and its accuracy and completeness are not guaranteed or warranted by the Owner or the A/E, it being the Contractor's sole responsibility to verify the accuracy and completeness of such information. Such information is not incorporated by reference into or made a part of the Contract Documents.

3.2.1.1 Notwithstanding any information provided by Owner or anyone acting on the behalf of Owner, the Contractor assumes full responsibility for inspection of the site and for the means and methods of construction that he employs when performing the Work. The Owner shall not be liable for any additional work or costs arising as a result of any conclusions reached or assumptions derived by the Contractor from or based upon any such information that the Owner makes available for the Contractor's convenience.

3.3 OWNER-PAID PERMITS AND FEES

3.3.1 The Owner will, where applicable, pay for:

.1 Sewer availability fees;

.2 Water availability/meter connection fee;

.3 Electrical, natural gas, telephone, and cable TV permanent installation charges;

.4 Any easements required;

.5 Railroad flagging services; and

.6 Permits for work in Virginia Department of Transportation (VDOT) right-of-way. The Contractor is required to comply with the general requirement for work in the VDOT right-of-way as outlined in the The Manual of Specifications and Standard Details, 2005 for the City of Lynchburg, and the VDOT Manual for this work. Upon completion of all work in the VDOT right-of-way, the VDOT Personnel will conduct an inspection and issue a punch list. The Contractor shall be responsible for completion of those items on the punch list and for obtaining the written release of the permit.

3.3.2. The Contractor's attention is directed to Article 4.7, Contractor-Paid Taxes, Permits, Fees, and Notices, describing other permits to be obtained and fees to be paid by the Contractor.

3.4 OWNER'S RIGHT TO STOP WORK

3.4.1 If the Contractor fails to correct defective Work as required herein or persistently fails to carry out the Work in accordance with the Contract Documents, the Owner, by a written order, may order the Contractor to stop the Work, or any portion thereof, until the cause for such order has been eliminated; however, this right of the Owner to stop the Work shall not give rise to any duty on the part of the Owner to exercise this right for the benefit of the Contractor or any other person or entity.

3.5 OWNER'S RIGHT TO CARRY OUT THE WORK

3.5.1 If the Contractor defaults or neglects to carry out the Work in accordance with the Contract Documents and fails within seven (7) days after receipt of Notice from the Owner to commence and continue correction of such default or neglect with diligence and promptness, the Owner may, without prejudice to any other remedy he may have, rectify such deficiencies, including without limitation, by performing the Work or having the Work performed by other contractors, as outlined in Section 6.1, Owner’s Right to Perform Work and to Award Separate Contracts. In such case, an appropriate Change Order or Change Directive shall be issued by Owner deducting from the payments then or thereafter due the Contractor the cost of correcting such deficiencies, including compensation for the A/E's additional services made necessary by such default, neglect or failure. If the payments then or thereafter due the Contractor are not sufficient to cover such amount, the Contractor shall pay the difference to the Owner.

3.5.2 Neither the Owner nor the A/E nor their officers, agents, assigns or employees are in any way liable or accountable to the Contractor or his surety for the method by which Work performed by the Owner or performed by other contractors pursuant to this Article 3.5, or any portion thereof, is accomplished or for the price paid therefore. Notwithstanding the Owner's exercise of its rights under this Article 3.5, the Contractor and its surety shall have sole responsibility to maintain and protect the Work, including without limitation, that portion of the Work performed by or on behalf of Owner pursuant to this Article 3.5.

3.6 SUSPENSION OF WORK

3.6.1 The Owner shall have the authority to suspend the Work, in whole or in part, for such periods and such reasons as the Owner may deem necessary or desirable, in its sole discretion, including without limitation:

.1 Unsuitable weather;

.2 Other conditions considered unfavorable for the suitable prosecution of the Work; and/or

.3. Other conditions considered adverse to the best interests of the Owner.

3.6.2 Any such suspension shall be made by Owner by written order to the Contractor. The Contractor shall obey immediately such order of the Owner and shall not resume the Work until so ordered in writing by the Owner. The Contractor shall be entitled to an extension of the Contract Time, subject to the provisions of Article 8, Contract Time, herein.

3.6.3 No such suspension of the Work shall be the basis of a claim by the Contractor for any increase in the Contract Sum or for any other damages, losses, costs or expenses if the suspension is for a reasonable time under the circumstances then existing and the cause thereof is beyond the control and is without the fault or negligence of the Owner or those acting on Owner's behalf.

3.6.4 In the event of suspension of Work, the Contractor will, and will cause his Subcontractors and others providing any of the Work through Contractor to, protect carefully his and their materials and Work against damage or injury from the weather and maintain completed and uncompleted portions of the Work as required by the Contract Documents. If, in the opinion of the Owner, any Work is damaged or injured by reason of failure on the part of the Contractor or any of his subcontractors to so protect same, such Work shall be removed and replaced at the expense of the Contractor.

3.7 USE AND OCCUPANCY PRIOR TO FINAL ACCEPTANCE BY OWNER

3.7.1 The Owner has the right to take possession of and use any completed or partially completed portions of the Work, notwithstanding that the time for completing the entire Work or any portions thereof may, or may not, have expired. The taking of possession and use by the Owner shall be in accordance with the provisions in Article 9.8, Substantial Completion and Guarantee Bond. If such prior use delays the Work, the Contractor may submit a request for a time extension in accordance with the requirements of Article 8, Contract Time.

3.8 RIGHT TO AUDIT AND PRESERVATION OF RECORDS

3.8.1 The Contractor shall maintain books, records and accounts that completely and accurately account for all of his costs and receipts relating to the Project in accordance with generally accepted accounting principles and practices. The Owner or its authorized representatives shall have the right to review, inspect, audit and/or copy the books, records, accounts and related documents, including without limitation, supporting documents, of the Contractor under any of the following conditions:

.1 If the Contract is terminated for any reason in accordance with the provisions of these Contract Documents, in order to arrive at equitable termination costs;

.2 If the Contractor and the Owner dispute the amount due the Contractor under the terms of this Contract;

.3 To check or substantiate any amounts invoiced or paid that are required to reflect the costs of the Contractor, or the Contractor's efficiency or effectiveness under this Contract or in connection with

any extras, changes, claims, additions, backcharges, or other, as may be provided for in this Contract; and/or

.4 If it becomes necessary to determine the Owner's rights and the Contractor's obligations under the Contract or to ascertain facts relative to any Claim.

3.8.2 These provisions for review, inspection, audit and copying shall give the Owner unlimited access during normal working hours to the Contractor's books, records, accounts and supporting documents under the conditions stated above.

3.8.3 The Contractor shall make all his books, records, accounts, and all other documents relating to his costs and receipts under this Contract, including without limitation any supporting documents, available to the Owner and its representatives for review, audit, inspection and copying at any time during the period from entry into this Contract through three years after Final Payment or termination of this Contract, whichever occurs later.

3.8.4 Any payments made under this Contract shall not constitute a waiver of the Owner's rights to review, inspect, copy and audit. Payments shall not constitute a waiver or agreement by the Owner that it accepts as correct the billings, invoices or other charges upon which the payments are based. If the Owner's review and audit produces a claim against the Contractor, the Owner may pursue all its legal remedies, even though Owner has made all or part of the payments required by this Contract.

3.8.5 If any review or audit by the Owner or the Owner's representatives discloses an underpayment by the Owner, the Owner shall pay any amounts found by the audit to be owed to the Contractor. If such audit discloses an overpayment, the Contractor reimburse the Owner for the amount of the overpayment.

3.8.6 The Owner's right to review, inspect, audit and copy, and the Contractor's duty as to preservation of records shall terminate at the end of three (3) years after Final Payment or termination of this Contract, whichever occurs later. The Contractor shall include this "Right to Audit and Preservation of Records" clause in all his subcontracts, and he shall require the same to be inserted by all Subcontractors and lower-tier subcontractors in their subcontracts~~,~~ for any portion of the Work. Should Contractor fail to cause this clause to be included in any such subcontract or lower tier subcontract or otherwise fail to ensure the Owner's rights under this Article 3.8, Contractor shall be liable to Owner for all costs, expenses and attorney's fees that Owner may incur in order to obtain the information that would have otherwise been available to Owner under this Article 3.8, and the absence of such information shall create a presumption in the Owner's favor, which Contractor must overcome with clear and convincing evidence, that the missing information does not support the payment to Contractor or Contractor claim at issue.

3.8.7 Review, inspection, audit and copying pursuant to this Article 3.8 may be conducted by the Owner or its authorized representatives.

3.8.8 Documents subject to this Article 3.8 shall be made available to Owner and its representatives in whatever formats Owner requests, including without limitation, any electronic formats and/or in paper formats.

3.9 RIGHT TO REVIEW OTHER DOCUMENTS AND MATERIALS

3.9.1 In addition to the rights granted to the Owner under Article 3.8, Right to Audit and Preservation of Records or Documents, the Owner shall have the right to inspect, review and copy any and all of the Contractor's records or documents pertaining to or relating in any way to the Work, including, but not limited to, correspondence, memoranda, minutes, reports, intra- and inter-office communications, work papers, estimating sheets, progress reports, forecasts, audio or video recordings, computer disks, e-mails, films, or any other materials, regardless of physical form or characteristics, which were prepared by or in

the possession of, or obtainable by, the Contractor. The Contractor shall make all such documents and records available to the Owner upon ten (10) days Notice to the Contractor of the Owner's intent to inspect and review such documents. The Contractor shall include this "Right to Review Documents and Other Materials" clause in all its subcontracts, and Contractor shall cause the same to be inserted by all Subcontractors and lower-tier subcontractors in their subcontracts for any portion of the Work. The Contractor hereby waives any right he may have to additional compensation or time extensions in the event he fails or refuses to preserve and produce records pertaining to any such claim as requested by the Owner pursuant to this paragraph. In addition, the Owner may withhold all or any portion of any progress payments, which may be otherwise due, in the event Contractor refuses to comply with its obligations under this Article 3.9. The review, inspection and copying of documents and other records under this Article 3.9 may be conducted by the Owner or its authorized representatives.

3.9.2 Records and documents subject to this Article 3.9 shall be made available to Owner and its representatives in whatever formats Owner requests, including without limitation, any electronic formats and/or in paper formats.

ARTICLE 4 CONTRACTOR

4.1 DEFINITION

4.1.1 The Contractor is the person or entity identified in the Contract as such, and is generally referred to throughout the Contract Documents as if singular in number and masculine in gender but includes the feminine and neuter in gender, as appropriate. The term Contractor means the Contractor or his authorized representative.

4.1.2 This entire Contract is not one of agency by the Contractor for Owner but one in which the Contractor is engaged independently in the business of providing the services and performing the Work herein described as an independent contractor.

4.2 REVIEW OF CONTRACT DOCUMENTS

4.2.1 The Contractor shall not perform any portion of the Work at any time without having obtained and carefully reviewed the Contract Documents or, where required, approved Shop Drawings, Product. Data, Samples or Manuals for such portion of the Work.

4.2.2 The Contractor shall keep at the Project site at least two (2) copies of the drawings and specifications and shall at all times give the A/E, inspectors, and representatives of the Owner access thereto. Further, said drawings and specifications shall be the approved sets issued to the Contractor by the appropriate City permit agencies

4.3 CONTRACTOR'S REPRESENTATIONS

By entering into this Contract with the Owner, the Contractor represents and warrants the following, together with all other representations and warranties in the Contract Documents

4.3.1 That he is experienced in and competent to perform the type of work required and to furnish the plant, materials, supplies or equipment to be so performed or furnished by him;

4.3.2 That he is financially solvent, able to pay his debts as they mature, and possessed of sufficient working capital to initiate and complete the Work required by the Contract Documents;

4.3.3 That he is familiar with all federal, state, and local government laws, ordinances, permits, regulations and resolutions that may in any way affect the Work or those employed therein;

4.3.4 That such temporary and permanent Work required by the Contract Documents which is to be done by him will be satisfactorily constructed and fit for use for its intended purpose and that such construction will not injure any person, or damage any property;

4.3.5 That he has carefully examined the Contract Documents and the site of the Project and the Work and that from his own investigations, he has satisfied himself and made himself familiar with: (1) the nature and location of the Work, (2) the character, quality and quantity of materials likely to be encountered, including, but not limited to, all structures and obstructions on or at the project site, both natural and man-made; (3) the character of equipment and other facilities needed for the performance of the Work, (4) the general and local conditions, including without limitation its climatic conditions, the availability and cost of labor and the availability and cost of materials, tools and equipment; (5) the quality and quantity of all materials, supplies, tools, equipment, labor and professional services necessary to complete the Work in the manner required by the Contract Documents; and (6) all other matters or things which could in any manner affect the performance of the Work;

4.3.6 That he will fully comply with all requirements of the Contract Documents;

4.3.7 That he will perform the Work consistent with good workmanship, sound business practice, and in the most expeditious and economical manner consistent with the best interests of the Owner;

4.3.8 That he will furnish efficient business administration, an experienced superintendent, and an adequate supply of workmen, equipment, tools and materials at all times;

4.3.9 That he will complete the Work within the Contract Time;

4.3.10 That his Contract Sum is based upon the labor, materials, systems and equipment required by the Contract Documents, without exception; and

4.3.11 That he has satisfied himself as to the feasibility and correctness of the Contract Documents for the construction of the Work.

4.4 SUPERVISION AND CONSTRUCTION PROCEDURES

4.4.1 The Contractor shall supervise and direct the Work, using his best skill and attention. He shall be solely responsible for all construction means, methods, techniques, sequences and procedures and for coordinating all portions of the Work under the Contract; subject, however, to the Owner's right to reject means and methods proposed by the Contractor which are unsafe or otherwise not in compliance with the Contract Documents.

4.4.2 The Contractor shall be responsible to the Owner for the acts and omissions of Contractor's employees, Subcontractors and sub-subcontractors, suppliers, their agents and their employees, and of any other persons providing any of the Work through Contractor, and for their compliance with each and every requirement of the Contract Documents, in the same manner as if they were directly employed by the Contractor.

4.4.3 The Contractor understands and agrees that he shall not be relieved of his obligations to perform the Work in accordance with the Contract Documents either by the activities or duties of the Owner or the A/E in their administration of the Contract or by inspections, tests, or approvals required or performed under Article 7 by persons other than the Contractor.

4.4.4 Before starting a section of the Work, the Contractor shall carefully examine all preparatory work that has been executed by others to receive his Work to see that it has been completed. He shall check carefully,

by whatever means are required, to ensure that his Work and adjacent, related work will finish to proper quality, contours, planes, and levels.

4.4.5 The Contractor understands and agrees that the Owner and A/E will not have any liability for or any responsibility to exercise any control over construction means, methods, techniques, sequences or procedures, or for safety precautions and programs in connection with the Work, and they will not be responsible for the Contractor's failure to carry out the Work in accordance with the Contract Documents. The Owner and the A/E will not have any liability for or any responsibility to exercise any control over the acts or omissions of the Contractor, Subcontractors, sub-subcontrators or any of their agents or employees, or any other persons performing any of the Work.

4.4.6 The Contractor shall use no plant, equipment, materials, or persons for this Work to which the Owner objects.

4.4.7 The Contractor shall not remove any portion of the Work or stored materials from the site of the Project without the Owner's prior, written approval.

4.5 LABOR, MATERIALS AND EQUIPMENT

4.5.1 The Contractor shall furnish all plant, labor, materials, supplies, equipment and other facilities and things necessary or proper for, or incidental to, the Work, and will perform all other obligations imposed on him by the Contract Documents. Final payment will not be made until the Work is so completed.

4.5.2 Unless otherwise provided in the Contract Documents, the Contractor shall provide and pay for all labor, materials, equipment, tools, construction equipment and machinery, water, heat, utilities, transportation, and other facilities and services necessary for the proper execution and completion of the Work, whether temporary or permanent and whether or not incorporated or to be incorporated in the Work.

4.5.3 Work, materials, and equipment which are necessary in the construction but which are not specifically referred to in the specifications or shown in the drawings but implied by the Contract Documents shall be furnished by the Contractor at his own cost and expense. Such work and materials shall correspond with the general character of the Work as may be determined by the A/E subject to review as provided in Article 2.2.11.

4.5.4 The Contractor shall perform at least that percentage of the Work specified in the Contract to be Contractor self performed with forces that are in the direct employment of the Contractor. The Contractor shall submit to the Owner within thirty (30) days after award of the Contract a designation of the Work to be performed by the Contractor with his own forces. The percentage of the Work to be performed under subcontract shall be calculated by adding the amounts of all subcontracts and dividing this sum by the total Contract Sum.

4.5.5 The Contractor shall at all times enforce strict discipline, safety and good order among all persons providing any of the Work through him and shall not cause or allow to be used for the Work any unfit person or anyone not skilled in the task assigned to him. If any person providing any of the Work through the Contractor shall appear to the Owner to be incompetent or to act in a disorderly or improper manner, such person shall be removed immediately, at the request of the Owner, and shall not provide any of the Work except on written consent of the Owner.

4.5.6 No materials or supplies for the Work shall be purchased by the Contractor or by any Subcontractor subject to any chattel mortgage, or under a conditional sale or other agreement by which an interest is retained by the seller. The Contractor warrants that he has good title to all materials and supplies used by him in the Work.

4.5.7 The Contractor shall provide approved and adequate sanitary accommodations. All wastes shall be covered, disinfected, incinerated or otherwise disposed of legally.

4.5.8 All equipment, apparatus and/or devices of any kind to be incorporated into the Work that are shown or indicated on the drawings or called for in the specifications or required for the completion of the Work shall be entirely satisfactory to the Owner as regards operation, capacity and/or performance. No approval, either written or verbal, of any drawings, descriptive data or samples of such equipment, apparatus, and/or device shall relieve the Contractor of his responsibility to turn over the same in good working order for its intended purpose at the completion of the Work in complete accordance with the Contract Documents. Any equipment, apparatus and/or device not fulfilling these requirements shall be removed and replaced by Contractor with proper and acceptable equipment, apparatus, and/or device, or put in good working order satisfactory to the Owner by Contractor without additional cost to the Owner.

4.6 WARRANTY

4.6.1 The Contractor warrants to the Owner that all materials and equipment furnished under this Contract will be new unless otherwise specified, and that all workmanship will be of first class quality, free from faults and defects and in conformance with the Contract Documents and all other warranties and guaranties specified therein. Where no standard is specified for such workmanship or materials, they shall be the best of their respective kinds. All Work not conforming to these requirements, including substitutions not properly approved and authorized, may be considered defective. If required by the Owner, the Contractor shall furnish satisfactory evidence as to the kind and quality of materials and equipment. This warranty is not limited by the provisions of Article 13, Uncovering and Correction of Work.

4.6.2 The Work included in this Contract is specified in the Contract Documents. The Contractor shall be required to complete the Work specified and to provide all items needed for construction of the Work, complete and in good order.

4.7 CONTRACTOR-PAID TAXES, PERMITS, FEES AND NOTICES

4.7.1 The Contractor shall pay all sales, consumer, use and other similar taxes for the Work or portions thereof provided by the Contractor which are legally enacted at the time bids are received, whether or not yet effective. Taxes to be paid by the Contractor shall include, but shall not be limited to, the Lynchburg City Business, Professional and Occupational License Tax (a gross receipts tax).

4.7.2 Except as provided in Article 3.3, Owner-Paid Permits and Fees, the Contractor will be responsible for obtaining and paying for all other fees, permits and licenses necessary for the proper execution of the Work, including but not limited to:

.1 Building Permit and inspections (City fees waived);

.2 Plumbing, Electrical, Mechanical Permits and inspections (City fees waived);

.3 Temporary water meter, temporary electrical and telephone installations and temporary utility usage;

.4 Temporary security lighting;

.5 All other permits necessary in order to perform the Work shall also be secured by the Contractor, and fees necessary in order to perform the Work shall be paid by him as part of this Contract at no additional cost to the Owner.

4.7.3 The Contractor shall give all notices and comply with all laws, ordinances, rules, regulations, codes, permits, resolutions and lawful orders of any public authority bearing on the performance of the Work; including but not limited to OSHA, Title 40.1 Labor and Employment Chapter 3 of the Code of Virginia, and Title VII of the Civil Rights Act of 1964, as amended. All safety violations shall be corrected immediately upon receipt of notice of violation.

4.8 COMPLIANCE

4.8.1 All demolition and excavation shall comply with all laws, ordinances, rules and regulations, and lawful orders of public authority, including without limitation, those for the prevention of accidents as issued by the Department of Labor and Industry of the Commonwealth of Virginia.

4.8.2 To the extent of the Work indicated in the Contract Documents, the Contractor shall comply and the construction shall conform with all applicable and current editions or revisions of the following codes, specifications and standards. In case of conflict, the order of precedence shall be as hereinafter listed:

.1 Lynchburg Public Procurement Code;

.2 Contract Documents;

.3 The Virginia Uniform Statewide Building Code (“USBC”), as amended including, without limitation, The International Building Code ("IBC") and other codes incorporated by the USBC and IBC); and

.4 The Virginia Department of Transportation Road and Bridge Specifications and the Road Designs and Standards.

4.8.3 If the Contractor (or any person in a contract with the Contractor relating to the Work) finds an error, inconsistency, omission, ambiguity, discrepancy, conflict or variance in the Contract Documents, or between the Contract Documents and any provisions of law, ordinance, rule, or regulations or any of the codes, specifications and standards set forth in 4.8.2 herein, the Contractor has the obligation to promptly seek in writing a clarification thereof from the A/E, with a copy to the Owner, prior to the time of beginning any of the Work that is affected by such error, inconsistency, omission, ambiguity, discrepancy, conflict or variance. The Owner will welcome such a clarification request, and, if deemed necessary by the Owner, the Owner will issue a written instruction clarifying the matter in question. If the Contractor feels that the written clarification requires additional work, the Contractor shall follow the change process in Article 12, Changes and Modifications in the Work.

Should the Contractor fail to seek such a clarification thereof immediately upon the discovery of the need therefor, prior to the time the said Work is performed, the Contractor thereby assumes all risk of loss related to such error, inconsistency, ambiguity, discrepancy, conflict or variance which the Contractor (and any person in contract with Contractor relating to the Work) knew or should have known, using a normal, professional standard of care, existed prior to the time the Work was performed.

4.8.4 Any material or operation specified by reference to publications~~,~~ or published specifications of a manufacturer, a society, an association, a code, or other published standard, shall comply with the requirements of the referenced document which is current on the date of receipt of bids. If the Contractor observes that any of the Contract Documents are at variance with any such referenced publications, codes, published specifications, or published standards in any respect, he shall promptly notify the A/E in writing, with a copy to the Owner. The A/E will make such judgments as are necessary and notify the Contractor prior to the performance of the Work.

4.8.5 If the Contractor performs any Work contrary to any law, code, ordinance, regulation, publication, standard, permit, rule, regulation or resolution, he shall assume full responsibility therefore and shall bear all costs attributable thereto.

4.8.6 The Contractor is responsible for locating all underground structures such as water, oil and gas mains, water and gas services, storm and sanitary sewers and telephone and electric conduits that may be encountered during construction. The Contractor shall have Miss Utility locate all utilities on the site within the area of the Work and shall dig test holes, to determine the position of the underground structures. The Contractor shall pay the cost of digging test holes and likewise he shall pay the cost of the services of the representatives of the owners of such utilities for locating the said utilities. The cost of determining the location of any and all utilities is to be included in the bid price. The Owner shall pay the owners of such utilities for fees or charges for relocation of gas, electric, telephone, cable or other lines and/or services indicated to be relocated by others.

4.8.7 If utilities are marked which are not shown on the plans, the Contractor shall immediately give Notice to the Owner and the A/E of such finding. The Owner and A/E shall provide a direction to the Contractor within a reasonable period of time if additional work is required as a result of the finding. If the Contractor believes that it requires additional work, the Contractor shall follow the change process in Article 12, Changes and Modifications in the Work.

4.9 ALLOWANCES

4.9.1 The Special Conditions, if any, will contain provisions for allowances, if applicable to this Contract.

4.10 SUPERINTENDENT

4.10.1 The Contractor shall employ and have present at the Project site a competent Superintendent and any necessary assistants to ensure adequate supervision of the Work. The Superintendent shall have full authority to represent the Contractor, and all communications given to the Superintendent shall be as binding as if given to the Contractor.

4.10.2 Such Superintendent shall be acceptable to the Owner and shall be one who will be continued in that capacity for duration of this Project, unless he ceases to be on the Contractor's payroll. The Superintendent shall not be employed on any other project during the performance of this Contract.

4.11 CONSTRUCTION SCHEDULE

4.11.1 The Contractor shall, within twenty (20) days after issuance of the Notice of Award, prepare and submit to the A/E and Owner for review, a reasonably practicable and feasible Construction Schedule, showing the method by which the Contractor will comply with Completion Date requirements as set forth in the Contract. Unless otherwise agreed in writing by Owner or indicated in the specifications, the Construction Schedule shall use the Critical Path Method ("CPM") and an industry-standard computer software program, such as Primvera, acceptable to Owner and A/E, and shall be provided in electronic and paper format. The Construction Schedule shall show in detail how the Contractor plans to execute and coordinate the Work. The Contractor shall use this schedule in the planning, scheduling, direction, coordination and execution of the Work. The Construction Schedule shall encompass all of the work of all trades necessary for construction of the Project and shall be sufficiently complete and comprehensive to enable progress to be monitored on a day-to-day basis. The Owner and A/E shall each be provided with a copy of all schedules, updates, reports and other documentation required herein, which shall be suitable for reproduction by the Owner, and, unless otherwise agreed by Owner, shall be in electronic and paper format. When required to assist the A/E with Project staffing requirements for the following week, the Contractor shall provide the A/E, on each Friday, with a detailed work schedule for the following week. The Contractor shall provide the A/E with at least a seventy-two (72) hour notice for the following

items: (1) All traffic lane changes, (2) Work ready for inspection or testing, (3) _____. The Contractor may be charged for additional costs of inspection when material and workmanship are found to not be ready for inspection or testing at the time the Contractor calls for inspection or testing.

4.11.2 It is the sole responsibility of the Contractor to prepare, maintain, update, revise and utilize the Construction Schedule as outlined in this Article 4.11, Construction Schedule. The Construction Schedule shall be the sole overall schedule utilized by the Contractor in managing this Project; provided, however, that Contractor may, at its option, employ and utilize other schedules based upon and consistent with the Construction Schedule. In general, it is the intent of this paragraph 4.11.2 to allow the Contractor to choose its own means, methods and construction procedures consistent with good practice and the Contract Documents.

4.11.3 If the Contractor should express an intention to complete the Work earlier than any required Milestone or Completion Date, including without limitation, in any schedule, the Owner shall not be liable to the Contractor for any delay or associated extra costs based upon the Contractor being unable to complete the Work before such earlier date. The duties, obligations and warranties of the Owner to the Contractor apply only to the completion of the Work on the Milestone and Completion Dates required by the Contract Documents and do not apply to early completion.

4.11.4 Submission to the Owner of the Construction Schedule is advisory only, does not satisfy any requirement for any notice required by the Contract Documents or the Lynchburg Public Procurement Code, and such submission shall not relieve the Contractor of the responsibility for accomplishing the Work within each and every required Milestone and Completion Date. Omissions and errors in the approved Construction Schedule shall not excuse performance that is not in compliance with the Contract Documents. Submission to the Owner and/or A/E in no way makes the Owner and/or A/E an insurer of the Construction Schedule's success or makes Owner and/or the A/E liable for time or cost overruns flowing from the Construction Schedule’s shortcomings. The Owner hereby disclaims any obligation or liability by reason of Owner and/or A/E approval or failure to object to the Construction Schedule, and any such approval or failure to object shall not be considered an admission by the Owner that the Construction Schedule was reasonably practicable or feasible.

4.11.5 Contractor shall consult with and obtain information from principal Subcontractors necessary in preparation of the Construction Schedule, and for updates and revisions required therein. Contractor shall provide each principal Subcontractor with copies of the Construction Schedule and any revisions or updates affecting that Subcontractor's work. Contractor shall hold appropriate progress meetings with Subcontractors and shall direct and coordinate the work of Subcontractors consistent with and as required herein. Owner shall have the right to attend Subcontractor progress meetings but shall not be required to participate in such meetings or provide information to Subcontractors, except through the Contractor. Contractor shall keep up-to-date minutes of subcontractor progress meetings and shall provide same to Owner. The Contractor shall ensure that each Subcontractor, sub-subcontractor or supplier acknowledges and accepts the requirements of the Construction Schedule relating to their part of the Work.

4.11.6 If Contractor's Construction Schedule indicates that Owner, the A/E, or a separate contractor is to perform an activity by a specific date, or within a certain duration, Owner, the A/E, or any separate contractor shall not be bound to said date or duration unless Owner expressly and specifically agrees in writing to the same. The Owner's and/or A/E’s overall review and acceptance or approval of the schedule does not constitute an agreement to specific dates or durations for activities of the Owner, A/E, or any separate contractor.

4.11.7 The Contractor's Superintendent shall maintain at the Project site a current, updated Construction Schedule, indicating actual monthly progress for those portions of the Project on which Work has been or is being performed.

4.11.8 If an extension or contraction of any Milestone or Completion Date is authorized by any Change Order, the Contractor shall revise his Construction Schedule, Milestone and Completion Dates accordingly.

4.11.9 If, in the opinion of the Owner, the Construction Schedule does not accurately reflect the actual progress and sequence of the Contractor's performance of the Work, the Contractor shall revise the Construction Schedule, upon the Owner's request, and submit a revised Construction Schedule that accurately represents the progress and sequence of the Contractor's performance of the Work.

4.11.10 Contractor shall submit to the Owner the name of any scheduling consultant that Contractor may select or retain, prior to using such consultant. Contractor shall not utilize any particular scheduling consultant over the reasonable objection of the Owner to that consultant.

4.11.11 Contractor covenants, warrants, and guarantees that Contractor will not:

.1 Misrepresent to Owner its planning and scheduling of the Work;

.2 Utilize schedules materially different from those made available to the Owner or any subcontractors for the direction, execution and coordination of the Work, or which are not feasible or realistic;

.3 Prepare schedules, updates, revisions or reports that do not accurately reflect Contractor's actual intent or Contractor's reasonable and actual expectations as to:

(a) The sequences of activities,

(b) The duration of activities,

(c) The responsibility for activities,

(d) Resource availability,

(e) Labor availability or efficiency,

(f) Expected weather conditions,

(g) The value associated with the activity,

(h) The percentage complete of any activity,

(i) Completion of any item of work or activity,

(j) Project completion,

(k) Delays, slippages, or problems encountered or expected,

(l) Subcontractor requests for time extension, or delay claims of subcontractors, and

(m) If applicable, the float time available.

4.11.12 Contractor's failure to substantially comply with the foregoing covenants, warranties and guarantees of paragraph 4.11.11 shall be a substantial and material breach of contract which will permit Owner to terminate Contractor for default~~,~~ or withhold payments under the Contract Documents~~,~~ and shall entitle Owner to the damages afforded by these Contract Documents or applicable law.

4.11.13 Should Contractor fail to substantially comply with the provisions of the Contract Documents relating to scheduling and execution of the Work by the overall Construction Schedule, Owner shall have the right, at its option, to retain the services of scheduling consultants or experts (including attorneys if necessary in the opinion of the Owner) to prepare schedules, reports, updates and revisions of the schedule in accordance with the Contract Documents and to review and analyze same, in order to allow Owner and the A/E to evaluate the progress of the Work by Contractor, to determine whether Contractor is substantially complying with the Contract Documents, and to direct such action by the Contractor, as permitted by the Contract Documents, as required to ensure, under the Owner's schedule prepared hereunder, that Contractor will complete the Work within the Contract Time. All costs and expenses and fees incurred by Owner in exercising its rights hereunder shall be charged to Contractor's account. If Contractor fails to substantially comply with the scheduling and execution of the Work requirements of the Contract Documents, Contractor hereby agrees, in such instance, to comply with such Owner-prepared schedules, if any, or directions, activity sequences and durations as Owner may reasonably require, without additional cost to the Owner (subject only to cost adjustments for such changes in the Work as Owner may direct), to ensure completion within the Contract Time.

4.11.14 The Construction Schedule shall be utilized by Owner, A/E and Contractor for submission, review and approval of monthly Payment Requests. The schedule must be updated by Contractor monthly with each progress payment application and submitted to the Owner and A/E for review with the progress payment application. Owner shall not be required to process and review Contractor's Application for Payment if Contractor has failed or refused to provide the scheduling update information required herein.

4.11.15 The type of schedule to be utilized on this Project, along with its particular elements, shall be as specified in the Contract Documents.

4.12 RESPONSIBILITY FOR COMPLETION

4.12.1 The Contractor shall furnish such manpower, materials, facilities and equipment and shall work such hours, including night shifts, overtime operations and Sundays and holidays, as may be necessary to ensure the performance of the Work within the Milestone and Completion dates specified in the Contract. If the Owner notifies the Contractor that it has become apparent that the Work will not be completed within required Milestone or Completion Dates and such is not due solely to circumstances for which Contractor has established entitlement to an extension to the Contract Time, the Contractor agrees that it will assume full responsibility to take some or all of the following actions, at no additional cost to the Owner (except for circumstances beyond the Contractors' control), in order to ensure, in the opinion of the Owner, that the Contractor will comply with all Milestone and Completion Date requirements:

.1 Increase manpower, materials, crafts, equipment and facilities;

.2 Increase the number of working hours per shift, shifts per working day, working days per week, or any combination of the foregoing; and

.3 Reschedule activities to achieve maximum practical concurrency of accomplishment of activities.

Failure of the Owner to notify the Contractor of the apparent delay shall not relieve Contractor of the obligation to finish the Work within the required Milestone or Completion date.

4.12.2 If the actions taken by the Contractor to remedy delays not due solely to circumstances for which Contractor has established entitlement to a time extension are not satisfactory, the Owner may direct the Contractor to take any and all actions necessary to ensure completion within the required Milestone and

Completion Dates, without additional cost to the Owner. In such event, the Contractor shall continue to assume responsibility for his performance and for completion within the required dates.

4.12.3 If, in the opinion of the Owner, the actions taken by the Contractor pursuant to this Article or the progress or sequence of Work are not accurately reflected on the Construction Schedule, the Contractor shall revise such schedule to accurately reflect the actual progress and sequence of Work.

4.12.4 Failure of the Contractor to substantially comply with the requirements of this Article is grounds for a determination by the Owner, pursuant to Article 15, Termination Of The Contract, that the Contractor is failing to prosecute the Work with such diligence as will ensure its completion within the time specified.

4.12.5 The Owner may, at its sole discretion and for any reason, including when it is apparent to the A/E or Owner that the Work will not be completed within the required Milestone or Completion Dates, require the Contractor to accelerate the Construction Schedule by providing overtime, Saturday, Sunday and/or holiday work and/or by having all or any subcontractors designated by the Owner provide overtime, Saturday, Sunday, and/or holiday work. If the Owner requires overtime, Saturday, Sunday or holiday work by the Contractor's or his Subcontractor's own forces, and such requirement is not related in any way to the Contractor's apparent inability to comply with Milestone and Completion Date requirements, the Owner shall reimburse the Contractor for the direct cost to the Contractor of the premium time for all labor utilized by the Contractor in such overtime, Saturday, Sunday or holiday work (but not for the straight time costs of such labor), together with any Social Security and State or Federal unemployment insurance taxes in connection with such premium time. However, no overhead supervision costs, commissions, profit or other costs and expenses shall be payable in connection therewith.

4.12.6 This provision does not eliminate the Contractor's responsibility to comply with the City's noise ordinances, all VDOT permit requirements, and all other applicable laws, regulations, rules, ordinances, resolutions, and permit requirements.

4.13 DOCUMENTS AND SAMPLES AT THE SITE

4.13.1 The Contractor shall, at the Owner's direction, maintain at the site for the Owner one record copy of all drawings, specifications, addenda, Change Orders and other Modifications, and Field Orders in good order and marked currently to record all changes made during construction, and approved Shop Drawings, Product Data, Samples and Manuals. These shall be available to the A/E. These shall be delivered to the Owner upon completion of the Work.

4.14 SHOP DRAWINGS, PRODUCT DATA, SAMPLES AND MANUALS

4.14.1 SHOP DRAWINGS are drawings, diagrams, schedules and other data specially prepared for the Work by the Contractor or any Subcontractor, manufacturer, supplier or distributor to illustrate some portion of the Work.

4.14.2 PRODUCT DATA are illustrations, standard schedules, performance charts, instructions, brochures, diagrams and other information furnished by the Contractor to illustrate a material, product or system for some portion of the Work.

4.14.3 SAMPLES are physical examples that illustrate materials, equipment or workmanship and establish standards by which the Work will be judged.

4.14.4 MANUALS are manufacturer's installation, start-up, operating, maintenance and repair instructions, together with parts lists, pictures, sketches and diagrams that set forth the manufacturer's requirements, for the benefit of the Contractor and the Owner.

4.14.5 The Contractor shall review, approve and submit, with reasonable promptness and in such sequence as to cause no delay in the Work or in the work of the Owner or any separate contractor, all Shop Drawings, Product Data, Samples and Manuals required by the Contract Documents.

4.14.6 By approving and submitting Shop Drawings, Product Data, Samples and Manuals, the Contractor represents that he has determined and verified all materials, field measurements, and field construction criteria related thereto, and that he has checked and coordinated the information contained within such submittals with the requirements of the Work and of the Contract Documents.

Parts and details not fully indicated on the contract drawings shall be detailed by the Contractor in accordance with standard engineering practice. Dimensions on the drawings, as well as detailed drawings themselves, are subject in every case to measurements of existing, adjacent, incorporated and completed Work, which shall be taken by the Contractor before undertaking any Work dependent on such data.

4.14.7 The Contractor shall not be relieved of responsibility for any deviation from the requirements of the Contract Documents by the Owner or A/E's approval of Shop Drawings, Product Data, Samples or Manuals under Article 2, Architect/Engineer unless the Contractor has specifically informed the Owner and A/E in writing of such deviation at the time of submission and the Owner has given specific written approval to the specific deviation. The Contractor shall not be relieved from responsibility for errors or omissions in the Shop Drawings, Product Data, Samples or Manuals by the A/E's approval thereof.

4.14.8 The Contractor shall direct specific attention, in writing or on resubmitted Shop Drawings, Product Data or Samples, to revisions other than those requested by the Owner or A/E on previous submittals.

No portion of the Work requiring submission of Shop Drawings, Product Data, or Samples shall commence until the submittal has been approved by the Owner and A/E as provided in Article 2, Architect/Engineer. All such portions of the Work shall be in accordance with approved submittals.

4.14.9 For substances that are proposed for use in the Project that may be hazardous to human health, the Contractor shall submit to the A/E, for information only, information on precautions for safely using these substances, including Material Safety Data Sheets and certification of registration by the Contractor with authorities under the respective Virginia and Federal Toxic Substances Control Acts.

4.14.10 Unless otherwise modified by the Owner in writing, the Contractor shall label or stamp and number all Shop Drawings, Product Data, Samples or Manuals as prescribed by the Project Manager.

4.14.11 The Contractor shall submit a copy of each submittal, including the transmittal sheet (for shop drawings, product data, samples or manuals) to the Owner simultaneously with the Contractor's submission of said drawings, data, samples or manual packages to the A/E.

4.15 EQUAL PRODUCTS:

4.15.1 The term "Product" as used in the Contract Documents refers to materials, equipment, supplies, articles, fixtures, devices, types of construction, or products, as appropriate.

4.15.2 All products furnished shall, whenever specified and otherwise wherever practicable, be the standard products of recognized, reputable manufacturers. If the manufacturer cannot make scheduled delivery of an approved item, the Contractor may request approval of the A/E to use another brand, make, manufacturer, article, device, product, material, fixture, form or type of construction which the Contractor judges to be equal to that specified. An item need not be considered by the A/E for approval as equal to the item so named or described unless it (1) it is at least equal in quality, durability, appearance, strength, and design; (2) it will perform at least equally the specific function imposed by the general design for the work being contracted for or the material being purchased; and (3) it conforms substantially, even with

deviations, to the detailed requirements for the item in the specifications. Approval shall be at the sole discretion of the A/E and will be based upon considerations of quality, workmanship, economy of operation, suitability for the purpose intended, and acceptability for use on the project. Any such approval must be in writing to be effective, and the decision of the A/E shall be final.

4.15.4 To obtain such approval of equal products other than those specified in Contract Documents, and not previously approved during the bidding, the Contractor's request for approval of any equal product shall include the following:

.1 Complete data substantiating compliance of the proposed equal product with the Contract Documents;

.2 Accurate cost data on proposed equal product in comparison with product or method specified;

.3 Product identification including manufacturer's name, address, and phone number;

.4 Manufacturer's literature showing complete product description, performance and test data, and all reference standards;

.5 Samples and colors in the case of articles or products;

.6 Name and address of similar projects on which the product was used and date of installation;

.7 All directions, specifications, and recommendations by manufacturers for installation, handling, storing, adjustment, and operation.

4.15.5 The Contractor shall also submit with his request for approval a statement which shall include all of the following representations by the Contractor, namely that:

.1 He has investigated the proposed equal product and determined that it is equal or better in all respects to that specified and that it fully complies with all requirements of the Contract Documents;

.2 He will meet all contract obligations with regard to this substitution;

.3 He will coordinate installation of accepted equal products into the work, making all such changes and any required schedule adjustments, at no additional cost to the Owner, as may be required for the Work to be complete in all respects;

.4 He waives all claims for additional costs and additional time related to equal products. He also agrees to hold the Owner harmless from claims for extra costs and time incurred by subcontractors and suppliers, or additional services which may have to be performed by the A/E, for changes or extra work that may, at some later date, be determined to be necessary in order for the Work to function in the manner intended in the Contract Documents;

.5 He will provide the same warranty and guarantee, and perform any work required in accordance therewith, for the equal product that is applicable to the specified item for which the equal product is requested;

.6 Material will be installed, handled, stored, adjusted, tested, and operated in accordance with the manufacturers' recommendation and as specified in the Contract Documents;

.7 In all cases, new materials will be used unless this provision is waived in writing by, the Owner or unless otherwise specified in the Contract Documents;

.8 All material and workmanship will be in every respect, in accordance with that which in the opinion of the Owner, is in conformity with approved modern practice; and

.9 He has provided accurate cost data on the proposed equal product in comparison with the product or method specified, if applicable.

4.15.6 The Owner may require tests of all products proposed as equal products so submitted to establish quality standards, at the Contractor's expense. After approval of an equal product, if it is determined that the Contractor submitted defective information or data regarding the equal product upon which Owner's approval was based, and that unexpected or uncontemplated redesign or rework of the Project will be required in order to accommodate the equal product, or that the item will not perform or function as well as the specified item for which equal product was requested, the Contractor will be required to furnish the original specified item or request approval to use another equal product. The Contractor shall pay all costs, expenses or damages associated with or related to the unacceptability of such an equal product and the resultant utilization of another item, and no time extension shall be granted for any delays associated with or related to such an equal product.

4.15.7 Equal products will not be considered for approval by the Owner if:

.1 The proposed equal product is indicated or implied on the Contractor's shop drawing or product data submittals and has not been formally submitted for approval by the Contractor in accordance with the above-stated requirements; or

.2 Acceptance of the proposed equal product will require substantial design revisions to the Contract Documents or is otherwise not acceptable to the Owner.

4.15.8 Except as otherwise provided for by the provisions of any applicable laws, the Contractor shall not have any right of appeal from the decision of the Owner disapproving any products submitted if the Contractor fails to obtain the approval for an equal product under this Article.

4.15.8 If the Contractor proposes a product which the Owner determines is not equal to the product named in Contract Documents but which the Owner nevertheless is willing to accept, Contractor shall provide, upon request by the Owner, an itemized comparison of the proposed substitution with the product specified and the cost differential which shall be credited to the Owner in a Change Order issued in accordance with Article 12, Changes and Modifications in the Work.

4.16 USE OF SITE

4.16.1 The Contractor shall confine his operations at the site to areas permitted by law, ordinances, permits, easements, right-of-way agreements and the Contract Documents. The Contractor shall not unreasonably encumber the site, in the opinion of the Owner, with any materials, equipment or trailers, nor shall Contractor block the entrances or otherwise prevent reasonable access to the site, other working and parking areas, completed portions of the Work and/or properties, storage areas, areas of other facilities that are adjacent to the worksite. If the Contractor fails or refuses to move said material, equipment or trailers within 24 hours of Notice by the Owner to so do, the Owner shall have the right, without further Notice, to remove, at the Contractor's expense, any material, equipment and/or trailers which the Owner deems are in violation of this paragraph.

4.17 CUTTING AND PATCHING OF WORK

4.17.1 The Contractor shall be responsible for all cutting, fitting or patching that may be required to complete the Work and to make its several parts fit properly and in accordance with the Contract Documents.

4.17.2 The Contractor shall not damage or endanger any portion of the Work or the work of the Owner or any separate contractors by cutting, patching or otherwise altering any work, or by excavation. The Contractor shall not cut or otherwise alter the work of the Owner or any separate contractor except with the written consent of the Owner and of such separate contractor. The Contractor shall not unreasonably withhold from the Owner or any separate contractor Contractor's consent to cutting or otherwise altering the Work. The Owner shall not be required to accept Work with a cut, splice, or patch when such cut, splice or patch is not generally accepted practice for the particular work involved or is otherwise unworkmanlike in the opinion of the Owner.

4.18 SITE CLEAN UP

4.18.1 The Contractor at all times shall keep the Project site and adjacent areas free from accumulation of waste materials or rubbish caused by his operations. Before final payment is made, the Contractor shall remove all of his waste materials, rubbish, scrap materials, debris, tools, construction equipment, machinery, surplus materials, falsework, temporary structures, including foundations thereof and plant of any description, from the Project site and put the site in a neat, orderly condition.

4.18.2 If the Contractor fails to clean up as required herein at any time during the performance of the Work or at the completion of the Work, the Owner may, upon 24 hours notification, clean up the site at the Contractor's expense.

4.19 PATENTS, ROYALTIES, ETC.

4.19.1 The Contractor guarantees to save harmless the Owner, its officers, agents, servants and employees from liability of any kind or nature, including without limitation, cost, expense and attorney's fees, on account of suits and claims of any kind for violation or infringement of any patents or patent rights by the Contractor, or by anyone directly or indirectly employed by him, or by reason of the use of any art, process, method, machine, manufacture, or composition of matter patented or unpatented in the performance of this Contract in violation or infringement of any letter or rights. The Contractor agrees to pay all royalties, fees, licenses, etc. required in respect of the Work or any part thereof as part of his obligations hereunder without any additional compensation.

4.20 INDEMNIFICATION

4.20.1 It is hereby mutually covenanted and agreed that the relation of the Contractor to the Work to be performed by him under this Contract shall be that of an independent contractor and that as such he will be responsible for all damages, loss or injury, including death, to persons or property that may arise or be incurred in or during the conduct and progress of said work as the result of any action, omission or operation under the Contract or in connection with the Work, whether such action, omission or operation is attributable to the Contractor, subcontractor, any material supplier, or anyone directly or indirectly employed by any of them. The Contractor shall make good any damages that may occur in consequence of the Work or any part of it. The Contractor shall assume all liability, loss and responsibility of whatsoever nature by reason of his neglect or violation of any federal, state, county or local laws, regulations , codes or ordinances.

4.20.2 The Contractor shall indemnify, hold harmless and defend the Owner, its employees, agents, servants and representatives from and against any and all claims, suits, demands, actions (regardless of the merits thereof) and damages of whatever nature arising out of or resulting from the performance of the Work or

the failure to perform the Work, including without limitation, jurisdictional labor disputes or other labor troubles that may occur during the performance of the Work.

4.20.3 The indemnification obligations under this Article shall not be affected in any way by any limitation on the amount or type of damages, compensation or benefits payable by or for the Contractor or any Subcontractor under worker's or workman's compensation acts, disability benefit acts or other employee benefit acts.

4.20.4 The obligations of the Contractor under this Article 4.20 shall not extend to the actions or omissions of the A/E, his agents or employees, arising out of the preparation or approval of maps, drawings, opinions, reports, surveys, change orders, designs or specifications.

4.20.5 The obligations of the Contractor under this Article 4.20 shall not extend to the proportion of damages, loss or injury, including death, to persons or property that may arise or be incurred as the result of any action, omission or operation of the Owner, or Owner's separate contractor(s), and their employees, agents, servants, and/or representatives.

4.21 NON-DISCRIMINATION IN EMPLOYMENT

4.21.1 During the performance of this Contract, the Contractor agrees as follows:

.1 The Contractor will not discriminate against any employee or applicant for employment because of race, religion, color, sex, national origin, age, disability, or any other basis prohibited by state law relating to discrimination in employment, except where there is bona fide occupational qualification reasonably necessary to the normal operation of the Contractor. The Contractor agrees to post in conspicuous places, available to employees and applicants for employment, notices setting forth the provisions of this nondiscrimination clause.

.2 The Contractor, in all solicitations or advertisements for employees placed by or on behalf of the Contractor, will state that such Contractor is an equal opportunity employer.

.3 Notices, advertisements and solicitations placed in accordance with federal law, Rule or regulation shall be deemed sufficient for the purpose of meeting the requirements of this section.

.4 The Contractor will include the provisions of the foregoing paragraphs 1, 2, and 3 in every subcontract or purchase order of over $10,000, so that the provisions will be binding upon each subcontractor or vendor.

4.21.2 DRUG-FREE WORKPLACE REQUIRED:

As required by section 2.2-4312 of the Code of Virginia during the performance of the Contract, Contractor agrees to (i) provide a drug-free workplace for the contractor's employees; (ii) post in conspicuous places, available to employees and applicants for employment, a statement notifying employees that the unlawful manufacture, sale, distribution, dispensation, possession, or use of a controlled substance or marijuana is prohibited in the Contractor's workplace and specifying the actions that will be taken against employees for violations of such prohibition; (iii) state in all solicitations or advertisements for employees placed by or on behalf of the Contractor that the Contractor maintains a drug-free workplace; and (iv) include the provisions of the foregoing clauses in every subcontract or purchase order of over $10,000, so that the provisions will be binding upon each subcontractor or vendor.

For the purposes of this Article 4.21, "drug-free workplace" means a site for the performance of Work done in connection with this Contract where Contractor's employees are prohibited from engaging in the unlawful manufacture, sale, distribution, dispensation, possession or use of any controlled substance or marijuana during

the performance of the Contract.

4.22 CONTRACT SECURITY

4.22.1 The Contractor shall deliver to the Owner, within ten (10) working days from Notice of Award, two (2) originals of a Performance Bond and a separate Labor and Material Payment Bond, in a form acceptable to the Owner, and each in an amount required by the Contract Documents and the Virginia Public Procurement Act, as security for the faithful performance of the Contract, and the payment of all persons performing labor and furnishing materials in connection with this Contract. The City will not issue Notice to Proceed until the bonds are received. The amount of the Performance and Payment Bonds shall be increased to the same extent the Contract Sum is increased due to Modifications. The form of bonds shall be acceptable to the Owner, and the surety shall be such surety company or companies as are acceptable to the Owner and as are authorized to transact business in the Commonwealth of Virginia. The cost of such bonds shall be included in the Contractor's bid amount.

4.22.2 The bonds shall irrevocably obligate the Contractor and surety to the full amount of the bonds unless and until all of Contractor's obligations under the Contract Documents have fully been fulfilled.

4.22.3 If, at any time, any surety or sureties for any bond relating to the Work becomes insolvent or is determined by the Owner to be unable to adequately secure the interest of the Owner, the Contractor shall, within (30) days after Notice from the Owner to do so, substitute an acceptable bond(s) in such form and sum and with such other sureties as obligors as may be satisfactory to the Owner. The premiums on such bond(s) shall be paid by the Contractor.

ARTICLE 5 SUBCONTRACTORS

5.1 DEFINITIONS

5.1.1 A Subcontractor is a person or entity who has a direct contract with the Contractor to perform or supply any of the Work at the site. Subcontractor means a Subcontractor or his authorized representative. The term Subcontractor does not include any separate contractor performing work pursuant to Article 6 or his subcontractors.

5.1.2 A Sub-subcontractor is a person or entity who has a direct or indirect contract with a Subcontractor to perform or supply any of the Work at the site. The term Sub-subcontractor includes a Sub-subcontractor or an authorized representative thereof.

5.1.3 The A/E will not deal directly with any Subcontractor or Sub-subcontractor or materials supplier. Subcontractor, Sub-subcontractors or material suppliers shall route requests for information or clarification through the Contractor to the A/E, with a copy to the Owner.

5.2 AWARD OF SUBCONTRACT AND OTHER CONTRACTS FOR PORTIONS OF THE WORK

5.2.1 The Contractor shall submit to the Owner with a copy to the A/E prior to the award of any subcontract for Work under this Contract and thirty (30) calendar days after the award of this Contract, the names of the suppliers of principal items, systems, materials, and equipment proposed for the Work; the names and addresses, business and emergency phones of the Subcontractors which he proposes to employ under this Contract, as well as such other information as may be requested by the Owner. The Owner will review each Subcontractor and supplier based upon his apparent financial soundness and responsibility, his known or reported performance on previous similar work, and his available plant, equipment and personnel to perform the Work. The Contractor shall not employ a Subcontractor or supplier to whom the Owner reasonably objects. The Owner's objection to a proposed Subcontractor or supplier shall not affect the Contract Sum.

5.2.2 The Contractor shall make no substitutions for any Subcontractor, person or entity previously selected unless first submitted to the Owner for review and approval.

5.3 SUBCONTRACTUAL RELATIONS

5.3.1 By an appropriate written agreement, the Contractor shall require each Subcontractor, to the extent of the Work to be performed by the Subcontractor, to be bound to the Contractor by the terms of the Contract Documents, and to assume toward the Contractor all the obligations and responsibilities which the Contractor, by these Contract Documents, assumes toward the Owner and the A/E. Said agreement shall preserve and protect the rights of the Owner and the A/E under the Contract Documents with respect to the Work to be performed by the Subcontractor so that the subcontracting thereof will not prejudice such rights, and shall allow to the Subcontractor, unless specifically provided otherwise in the Contractor-Subcontractor agreement, the benefit of all rights, remedies and redress against the Contractor that the Contractor, by these Contracts Documents, has against the Owner. Where appropriate, the Contractor shall require each Subcontractor to enter into similar agreements with his Sub-subcontractors. The Contractor shall make available to each proposed Subcontractor, prior to the execution of the subcontract, copies of all of the Contract Documents, and identify to the Subcontractor any terms and conditions of the proposed subcontract which may be at variance with the Contract Documents. Each Subcontractor shall similarly make copies of such Contract Documents available to his Sub-subcontractor's. Each subcontract agreement shall insure that all appropriate provisions of the Contract Documents are complied with by the Subcontractor.

5.3.2 The provisions herein regarding the City’s reasonable objection to any Subcontractor shall in no way affect the liability of the Contractor to Owner regarding performance of all obligations by or payment of Subcontractors. The City’s failure to object to any given Subcontractor shall not relieve the Contractor of his obligation to perform or have performed to the full satisfaction of the Owner all of the work required by this Contract.

5.3.3 Neither this article nor any other provision of the Contract Documents shall be deemed to make the Owner a joint venture or partner with the Contractor or to place the Subcontractor and materialmen in privity of contract with the Owner.

5.4 QUALIFICATION SUBMITTALS

5.4.1 Specific qualification submittals may be required of the Contractor, Subcontractors, installers and suppliers for certain critical items of the Work. Required qualification submittals are set forth in detail in the Instruction to Bidders and shall be provided, collected and submitted by the Contractor to the A/E with copies to the Owner. All information required of a single Subcontractor, installer or supplier shall be contained in a single, complete submittal. The Contractor shall submit the required qualification information within ten (10) days after receipt of the Owner's request.

5.4.2 The Owner may reject any proposed Subcontractor, installer or supplier, or any qualification submittals related thereto, for the following reasons:

.1 The Contractor's failure to submit requested information within the specified time; or

.2 The Contractor's failure to provide all of the requested information; or

.3 The Contractor's submission of a Subcontractor, installer or supplier, or qualifications thereof, which are unacceptable in the judgment of the Owner.

5.4.3 Should the Owner have reasonable objection to any proposed Subcontractor, installer or supplier, the Contractor shall submit another firm for approval by the Owner at no additional cost to the Owner.

ARTICLE 6 WORK BY OWNER OR BY SEPARATE CONTRACTORS

6.1 OWNER'S RIGHT TO PERFORM WORK AND TO AWARD SEPARATE CONTRACTS

6.1.1 The Owner reserves the right to perform work related to the Project with his own forces, and to award separate contracts in connection with other portions of the Project or other work on the site.

6.1.2 When separate contracts are awarded for different portions of the Project or other work on the site, the term "contractor" in the contract documents in each case shall mean the contractor who executes each separate construction agreement.

6.2 MUTUAL RESPONSIBILITY

6.2.1 The Contractor shall afford other contractors and the Owner reasonable opportunity for the introduction and storage of their materials and equipment and the execution of their work and shall properly connect and coordinate the Work with such other work. The Contractor shall coordinate his Work with the Owner and other contractors and store his apparatus, materials, supplies and equipment in such orderly fashion at the site of the Work as will not unduly interfere with the progress of the Work or the work of any other contractors.

6.2.1.1 If the execution or result of any part of the Work depends upon any work of the Owner or of any separate contractor, the Contractor shall, prior to proceeding with the Work, inspect and promptly report to the Owner in writing any apparent discrepancies or defects in such work of the Owner or of any separate contractor that render it unsuitable for the proper execution or result of any part of the Work.

6.2.1.2 Failure of the Contractor to so inspect and report shall constitute an acceptance of the Owner's or separate contractor's work as fit and proper to receive the Work, except as to defects which may develop in the Owner's or separate contractor's work after completion of the Work and which the Contractor could not have discovered by its inspection prior to completion of the Work.

6.2.2 Should the Contractor cause damage to the work or property of the Owner or of any separate contractor on the Project, or to other work on the site, or delay or interfere with the Owner's work on ongoing operations or facilities or adjacent facilities or said separate contractor's work, the Contractor shall be liable for the same; and, in the case of another contractor, the Contractor shall attempt to settle said claim with such other contractor prior to such other contractor's institution of litigation or other proceedings against the Contractor.

If such separate contractor sues the Owner on account of any damage, delay or interference caused or alleged to have been so caused by the Contractor, the Owner shall notify the Contractor, who shall defend the Owner in such proceedings at the Contractor's expense. If any judgment or award is entered against the Owner, the Contractor shall satisfy the same and shall reimburse the Owner for all damages, expenses, and other costs that the Owner incurs as a result thereof.

6.2.3 Should Contractor have a dispute with a separate contractor with whom the Owner has contracted regarding damage to the Work or the property of Contractor or to the Work or property of said separate contractor or with regard to any delays or interferences which either Contractor or said separate contractor has caused to the performance of the other's Work, Contractor agrees to attempt to settle such dispute directly with said separate contractor. Contractor agrees that it will not seek to recover from the Owner any damages, costs, expenses (including, but not limited to, attorney's fees) or losses of profit incurred by the Contractor as a result of any damage to the Work or property of the Contractor or for any delay or interference caused or allegedly caused by any separate contractor.

6.3 OWNER'S RIGHT TO CLEAN UP

6.3.1 If a dispute arises between the Contractor and separate contractors as to their responsibility for cleaning up as required by Article 4, Contractor, the Owner may clean up and charge the cost thereof to the contractor responsible as the Owner shall determine to be just.

ARTICLE 7 MISCELLANEOUS PROVISIONS

7.1 GOVERNING LAW

The provisions of this Contract shall be interpreted in accordance with the laws of the Commonwealth of Virginia.

7.2 PROVISIONS REQUIRED BY LAW DEEMED INSERTED

Each and every provision of law and clause required by law to be inserted in this Contract shall be deemed to be inserted herein, and the Contract shall be read and enforced as though it were included herein and if through mistake or otherwise, any such provision is not inserted or is not correctly inserted, then upon the application of either party, the Contract shall forthwith be physically amended to make such insertion.

7.3 SUCCESSORS AND ASSIGNS

The Owner and the Contractor each binds himself, his partners, successors, assigns and legal representatives to the other party hereto and to the partners, successors, assigns and legal representatives of such other party in respect to all covenants, agreements and obligations contained in the Contract Documents. Neither party to the Contract shall assign the Contract or sublet it without the written consent of the other, nor shall the Contractor assign any monies due or to become due to him hereunder, without the previous written consent of the Owner and the Contractor's surety.

In the event the Contractor desires to make an assignment of all or part of the Contract or any monies due or to become due hereunder, the Contractor shall file a copy of consent of surety, together with a copy of the assignment to the Owner and A/E. In the event the Contractor assigns all or any part of the monies due or to become due under this Contract, the instrument of assignment shall state that the right of assignees in and to any monies due to or to become due to Contractor shall be subject to prior liens and claims of all persons, firms and corporations that provided labor services or furnished material and equipment during the performance of the Work. The rights of assignees shall further be subject to the payment of any liens, claims, or amounts due to Federal, state, or local governments.

7.4 RIGHTS AND REMEDIES

7.4.1 The duties and obligations imposed by the Contract Documents and the rights and remedies available thereunder shall be in addition to, and not a limitation of, any duties, obligations, rights and remedies otherwise imposed or available by law, not inconsistent with the Contract Documents. No time limitations described in this Contract shall be construed to alter the applicable statutory period of limitations with regard to the enforcement of the obligations of the parties.

7.4.2 No action or failure to act by the Owner, A/E or Contractor shall constitute a waiver of any right or duty afforded any of them under the Contract, nor shall any such action or failure to act constitute an approval of or acquiescence in any breach thereunder, except as may be specifically agreed in writing.

7.4.3 Contractor agrees that he can be adequately compensated by money damages for any breach of this Contract which may be committed by the Owner and hereby agrees that, no default, act, or omission of

the Owner or the A/E, except for failure to make payments as required by the Contract Documents, shall constitute a material breach of the Contract entitling Contractor to cancel or rescind the provisions of this Contract or (unless the Owner shall so consent or direct in writing) to suspend or abandon performance of all or any part of the Work. Contractor hereby waives any and all rights and remedies to which he might otherwise be or become entitled, saving only its right to money damages.

7.5 SEVERABILITY

In the event that any provision of this Contract shall be adjudged or decreed to be invalid, such ruling shall not invalidate the entire agreement but shall pertain only to the provision in question and the remaining provisions shall continue to be valid, binding, and in full force and effect.

7.6 TESTS

7.6.1 If the Contract Documents, laws, ordinances, rules, regulations, codes, permits, resolutions or orders of any public authority having jurisdiction require any portion of the Work to be inspected, tested or approved, the Contractor shall give the Owner at least 24 hours notice of its readiness so that the Owner or the A/E or other representatives of the Owner may observe such inspection, testing or approval. The Contractor shall bear all costs of such inspections, tests or approvals conducted by public authorities. Site inspections, tests conducted on site or tests of materials gathered on site, which the Contract requires to be performed by independent testing entities, shall be contracted and paid for by the Contractor. Examples include, but are not limited to, the testing of cast-in-place concrete, foundation materials, soil compaction, pile installations, caisson bearings, and steel framing connections.

7.6.2 All materials and workmanship (if not otherwise designated by the specifications) shall be subject to inspection, examination or test by the Owner, A/E, and other representatives of the Owner, at any and all times during the manufacture and/or construction and at any and all places where such manufacture and/or construction are carried on. Special, full-sized and performance tests shall be as described in the specifications. Without additional charge, the Contractor shall furnish promptly all reasonable facilities, labor and materials necessary to make tests safe and convenient.

7.6.3 The selection of bureaus, laboratories and/or agencies for the inspection and tests of supplies, materials or equipment shall be subject to the approval of the Owner. Satisfactory documentary evidence, including but not limited to certificates of inspection and certified test reports that the material has passed the required inspection and tests must be furnished to the Owner, with a copy to the A/E, by the Contractor prior to the incorporation of the supplies, materials or equipment into the Work or at such times as to allow for appropriate action by the Owner.

7.6.4 Inspection or testing performed exclusively for the Contractor's convenience shall be the sole responsibility of the Contractor. Tests required by Contractor's or Subcontractor's error, omission or non-compliance with the Contract Documents, shall be paid for by the Contractor.

7.6.5 It is specifically understood and agreed that an inspection and approval of the materials by the Owner shall not in any way subject the Owner to pay for the said materials or any portion thereof, even though incorporated in the Work, if said materials shall in fact turn out to be unfit to be used in the Work, nor shall such inspection be considered as any waiver of objection to the Work on account of the unsoundness or imperfection of the material used.

ARTICLE 8 CONTRACT TIME

8.1 DEFINITION

8.1.1 Unless otherwise provided, the Contract Time is the period of time specified in the Contract Documents for Substantial Completion of the Work as defined herein, including authorized adjustments thereto. The Contractor shall complete his Work within the Contract Time.

8.1.2 The date of commencement of the Work is the date established in the Notice to Proceed

The Contractor shall not commence Work or store materials or equipment on site until written Notice to Proceed is issued or until the Contractor otherwise receives the Owner's written consent. The Contractor shall commence work no later than ten (10) days after the date established in the Notice to Proceed.

8.1.3 The date of Substantial Completion of the Work or designated portion thereof is the date determined by Owner when: (1) construction is sufficiently complete, in accordance with the Contract Documents, so the Owner can occupy or utilize the Work or designated portion thereof for the use for which it is intended; and (2) the Contractor has satisfied all other requirements for Substantial Completion which may be set forth in the Contract Documents.

8.1.4 The date of Final Completion of the Work is the date determined by the Owner when the Work is totally complete, to include punch list work, in accordance with the Contract Documents and the Owner may fully occupy and utilize the Work for the use for which it is intended.

8.1.5 The term “day” as used in the Contract Documents shall mean calendar days unless otherwise specifically designated.

8.2 PROGRESS AND COMPLETION

8.2.1 All time limits stated in the Contract Documents, including without limitation the date of Substantial Completion of the Work, are of the essence of the Contract.

8.2.2 The Contractor shall begin the Work on the date of commencement as defined herein. He shall carry the Work forward expeditiously with adequate forces and shall achieve Substantial and Final Completion as required by the Contract Documents.

8.3 CLAIMS FOR TIME EXTENSIONS

8.3.1 The time during which the Contractor is delayed in the performance of the Work by the acts or omissions of the Owner, the A/E or their employees or agents, acts of God, unusually severe and abnormal climatic conditions, fires, floods, epidemics, quarantine restrictions, strikes, riots, civil commotion or freight embargoes, or other conditions beyond the Contractor's control and which the Contractor could not reasonably have foreseen and provided against, shall be added to the time for completion of the Work (i.e., the Contract Time) stated in the Agreement; however, no claim by the Contractor for an extension of time for delays will be considered unless made in compliance with the requirements of this Article and other provisions of the Contract Documents.

8.3.2 The Owner shall not be obligated or liable to the Contractor for, and the Contractor hereby expressly waives any claims against the Owner on account of, any indirect or direct damages, costs or expenses of any nature which the Contractor, its Subcontractors, or Sub-subcontractor's or any other person may incur as a result of (1) any delays, reasonable or unreasonable, foreseeable or unforeseeable, which are either not caused by the acts or omissions of the Owner, its agents or employees or which arise from or out of (or due to) causes not within the control of the Owner, its agents or employees, or (2) any reasonable

delay regardless of its cause, it being understood and agreed that the Contractor's sole and exclusive remedy in any such events shall be an extension of the Contract Time, but only as determined in accordance with the provisions of the Contract Documents.

8.3.3 The burden of proof to substantiate a claim for an extension of the Contract Time shall rest with the Contractor, including evidence that the cause was beyond his control. It shall be deemed that the Contractor has control over the supply of labor, materials, equipment, methods and techniques of construction and over the Subcontractors, Sub-contractors, and suppliers, unless otherwise specified in the Contract Documents.

8.3.4 In the event of changes in the Work, the Contractor must identify any additional time required in the Proposed Change Order. The Owner need not consider any time extensions for changes in the Work not included in the Proposed Change Order.

8.3.5 No time extensions will be granted as a result of the Contractor's improper or unreasonable scheduling or for the Contractor's failure to have Shop Drawings, Product Data, Samples or Manuals submitted in ample time for review under a reasonable and agreed upon schedule.

8.3.6 Delays by Subcontractors, Sub-subcontractors or suppliers will not be considered justification for a time extension, except for the same valid reasons and conditions enumerated herein.

8.3.7 The Contractor acknowledges and agrees that actual delays due to changes, suspension of work or excusable delays~~,~~ in activities which, according to the Construction Schedule, do not affect the Contract Time will not be considered to have any effect upon the Contract Time and therefore will not be the basis for a time extension.

8.3.8 The Contractor acknowledges and agrees that time extensions will be granted only to the extent that: (1) excusable delays exceed the available flexibility in the Contractor's schedule; and (2) Contractor can demonstrate that such excusable delay actually caused, or will cause, delay to the Contractor's schedule that will extend the Contract Time.

8.3.9 With respect to Suspensions of Work under Paragraph 3.6, Suspension of Work, herein, the Contractor shall be entitled to an extension of the Contract Time not to exceed the length of time that the Work was suspended (unless as determined under this Article and the other requirements of the Contract Documents that a further extension is justified and warranted) if the claim is submitted in accordance with the requirements of this Article, and if the suspension is not due to any act or omission of the Contractor, any Subcontractor or Sub-subcontractor or any other person or organization for whose acts or omission the Contractor may be liable. The Contractor's claim will be evaluated in accordance with the terms of this Article.

8.3.10 The Contractor shall not be entitled to any extension of time for delays resulting from any conditions or other causes unless it shall have given written Notice to the Owner, within seven (7) calendar days following the commencement of each such condition or cause, describing the occurrence, the activities impacted and the probable duration of the delay. The Contractor's complete claim submittal for a time extension shall be submitted no later than twenty (20) calendar days after cessation of the delay or within such other longer period as the Owner may agree in writing to allow.

8.3.11 No such extension of time shall be deemed a waiver by the Owner of his right to terminate the Contract for abandonment or delay by the Contractor as herein provided or to relieve the Contractor from full responsibility for performance of his obligations hereunder.

8.4 CHANGE ORDER WORK

8.4.1 The Contractor shall make every reasonable effort to perform Change Order work within the Contract Time and in such manner as to have minimum delaying effects on all remaining Work to be performed under the Contract. If, however, the Change Order work results in an unavoidable increase in the time required to complete the Work, an extension of the Contract Time may be granted to the Contractor for the Change Order work. The Contractor's request shall be determined in accordance with the provisions of Article 8.3, Claims for Time Extensions, herein and as follows:

.1 If the time required for performance of the Change Order work has an unavoidable, direct, delaying effect on the primary sequence of Work activities remaining after rescheduling (e.g., the critical path in CPM type scheduling), the overall Contract Time may be extended by the minimum number of days required for the Change Order work as mutually agreed upon by the Owner and the Contractor;

.2 If the time required for performance of the Change Order work does not have an unavoidable direct delaying effect on the primary sequence of Work activities but is ordered by the Owner at a time such that insufficient Contract Time remains for completion of the Change Order work (and any limited number of contingent work activities), the Contract Time may be extended by the minimum number of days required for the Change Order work as mutually agreed upon by the Owner and the Contractor but only for the Change Order work and contingent activities, All other unaffected Work shall be performed within the Contract Time;

.3 Failure of the Owner and the Contractor to agree on a Contract Time extension as specified in .1 and .2 above shall not relieve the Contractor from proceeding with and performing the Change Order work promptly, as well as in such manner as to have minimal delaying effects on all remaining Work to be performed under the Contract. Such disagreement shall be resolved as soon as practical by negotiation.

8.5 LIQUIDATED DAMAGES FOR DELAY

8.5.1 The damages incurred by the Owner due to the Contractor's failure to complete the Work within required Milestone Dates and the Contract Time, including any extensions thereof, shall be in the amount set forth in the Construction Agreement, for each consecutive day beyond the Milestone Dates or the Contract Time (Sundays and all holidays included) for which the Contractor shall fail to complete the Work.

8.5.2 The parties hereby agree that the amount of liquidated damages provided in this Contract is neither a penalty nor a forfeiture and is intended to compensate the Owner solely for the Owner's inability to use the Work for its fully intended purpose, and is not intended to, nor does said amount include: (1) any damages, additional or extended costs~~,~~ incurred by the Owner for extended administration of this Contract, or by the Owner's agents, consultants or independent contractors for extended administration of this Contract, or (2) any additional services, relating to or arising as a result of the delay in the completion of the Work. Owner shall be entitled to claim against Contractor for its actual damages ~~and~~for any damages not specifically included within the liquidated damages as set forth herein. Such damages shall be computed separately, and, together with liquidated damages, either deducted from the Contract Sum or billed to the Contractor, at the option of the Owner.

Contractor agrees that it will not challenge the per diem amounts of liquidated damages imposed pursuant to this Article 8.5 except as to whether Contractor is responsible for the delays, themselves, that have resulted in the assessment of liquidated damages. The Contractor waives any challenge as to the validity of any liquidated damages specified on the grounds that such liquidated damages allegedly are void as penalties or allegedly are not reasonably related to Owner’s actual damages.

Owner may, in its sole discretion, deduct from any payments otherwise due Contractor amounts of liquidated damages assessable under this Article 8.5. Owner's failure to deduct liquidated damages assessable under this Article 8.5 from payments to Contractor shall not be deemed a waiver by Owner of any entitlement to such liquidated damages.

8.6 TIME EXTENSIONS FOR WEATHER

8.6.1 The Contract Time will not be extended due to inclement weather conditions that are normal to the general locality of Work site. The time for performance of this Contract includes an allowance for workdays (based on a 5-day workweek) which, according to historical data, may not be suitable for construction work.

.1 The following is the schedule of monthly anticipated normal inclement weather workdays for the Project location and will constitute the base line for monthly weather time extension evaluations.

ANTICIPATED NORMAL INCLEMENT WEATHER WORK-DAYS INCLUDED IN THE CONTRACT TIME OF PERFORMANCE											
JAN	FEB	MAR	APR	MAY	JUN	JUL	AUG	SEP	OCT	NOV	DEC
7	7	7	7	9	7	7	7	6	6	6	7

8.6.2 The Contractor, in his planning and scheduling of the Work as required by the Contract Documents, shall allow for the normal inclement weather for the locality of the Work site. If the Contractor believes that the progress of the Work has been adversely affected and that it will directly result in a failure to meet Substantial Completion within the Contract Time, by weather conditions above and beyond the amount normally expected, he shall submit a written request to the Owner, with a copy to the A/E, for an extension of time, pursuant to Paragraph 8.3, Claims for Time Extensions.

8.6.3 Such request shall be evaluated by the Owner in accordance with the provisions of the Contract Documents and shall include a comparison of actual weather statistics compiled by City of Lynchburg's Department of Public Works, for the time of year, locality of the particular Work site with the days claimed by the Contractor and the anticipated normal inclement weather as stated in subparagraph 8.6.1. The normal inclement weather expected has been included in the designated Contract Time for completion. The decision of the Owner shall be final.

8.6.4 The Contractor shall not be entitled to any money damages whatsoever for any delays resulting from inclement weather, whether normal or abnormal, foreseeable or unforeseeable. The Contractor and Owner stipulate and agree that, for delays due to weather as determined in 8.6.3, the Contractor's sole relief is a time extension granted in accordance with this Article 8.6, Time Extensions for Weather.

ARTICLE 9 PAYMENTS AND COMPLETION

9.1 CONTRACT SUM

9.1.1 The Contract Sum is stated in the Construction Agreement and, including authorized adjustments thereto, is the total amount payable by the Owner to the Contractor for the performance of the Work under the Contract Documents. The Contract Sum includes, but is not limited to, the Contractor's profit and general overhead and all costs and expenses of any nature whatsoever (including without limitation taxes, labor, equipment and materials), foreseen or unforeseen, and any increases in said costs and expenses, foreseen or unforeseen, incurred by the Contractor in connection with the performance of the Work, all of which

costs and expenses shall be borne solely by the Contractor. The Contractor agrees to assume all increases in costs of any nature whatsoever that may develop during the performance of the Work.

9.2 SCHEDULE OF VALUES

9.2.1 For Lump Sum Price contracts, before the pre-construction meeting, the Contractor shall submit to the Owner and A/E a schedule of values allocated to the various portions of the Work, prepared on payment forms provided by the Owner and supported by such data to substantiate its accuracy as the Owner may require. This schedule of values, unless rejected by the Owner, shall be used as a basis for the Contractor's Applications for Payment.

9.2.2 For Unit Price contracts, the Contractor shall utilize the payment request form provided by the Owner, wherein the schedule of values shall correspond with the individual unit price bid items. When so requested by the Owner, the Contractor shall provide a more detailed cost breakdown of the unit price items.

9.2.3 Contractor may include in his schedule of values a line item for "mobilization" which shall include a reasonable amount for mobilization for the Contractor and his Subcontractors. The Contractor shall not front-end load his schedule of values.

9.3 APPLICATION FOR PAYMENT

9.3.1 The Contractor shall submit to the A/E three (3) originally executed, itemized Applications for Payment (and one (1) copy to the Owner) by the tenth of each month, along with any authorized change orders for that billing cycle. The Applications for Payment shall be notarized, indicate in complete detail all labor and material incorporated in the Work during the month prior to submission, and supported by such data substantiating the Contractor's payment request as the Owner may require. The Applications for Payment shall also contain Contractor’s certification that due and payable amounts and bills have been paid by the Contractor for Work for which previous Certificates of Payment were issued and payments received from the Owner.

9.3.2 Payment may be made for the value of materials, which are to be incorporated into the finished Work, and which are delivered to and suitably stored and protected on the Work site. The Contractor shall provide releases or paid invoices from the seller of such materials to establish, to the Owner's satisfaction, that the Owner has title to said material. Stored materials shall be in addition to the Work completed and shall be subject to the same retainage provisions as the completed Work. Material once paid for by the Owner becomes the property of the Owner and may not be removed from the Work site without the Owner's written permission.

9.3.3 The requirements for payment for materials stored off-site shall include, but are not limited to, those specified in Paragraph 9.3.2 and the additional requirements hereinafter specified. Material stored off-site under this provision shall be included in the definition of Work, Article 1, Contract Documents.

9.3.3.1 The requirements of Paragraph 10.2, Safety of Persons and Property, are fully applicable to materials stored off-site.

9.3.3.2 For purposes of administering this provision, the following definitions are provided.

a. Material stored NEAR the Work site: A storage location shall be considered near the Work site if it is not more than fifty (50) miles (approximately a one-hours drive) from the Work site.

b. Material stored DISTANT from the Work site: Locations beyond the limit of fifty (50) miles shall be considered distant.

9.3.3.3 All proposed off-site locations, regardless of whether they are near or distant, shall be approved by the Owner prior to any payment under this Article. The approval process will include an inspection of the proposed storage site, which may or may not coincide with any inspection of materials stored.

9.3.3.4 Prior to payment for any material stored off-site, said material shall be inspected to verify that it is properly stored; i.e., segregated, inventoried, identified as the property of the Owner and Contractor, and duly protected as required in Article 10.2, Safety of Persons and Property. This material shall be clearly identified and physically segregated from any other material or stock, in such a manner that it is clear, from casual observationthat said material is not a part of any other stock or stored material.

9.3.3.5 For materials stored distant to the Work site, the Contractor shall reimburse the Owner for all reasonable costs incurred by the Owner, to include but not limited to salary, transportation, lodging and per diem, for the Owner's or the A/E's employees to travel to and from the storage locations for the purpose of verifying that the material is properly stored. It is anticipated that such trips would occur whenever additional material is claimed for payment and/or at least every six (6) months until the material is delivered to the Work site.

9.3.3.6 Except for unusual circumstances, the Contractor will not be required to reimburse the Owner's costs for visits to storage locations near the Work site.

9.3.3.7 The Contractor shall hold the Owner harmless from any and all losses, additional costs, direct or indirect damages and/or delays, whatsoever, which may occur as a result of a failure of the Contractor to deliver (or have delivered), in a timely manner, materials (for which payment has been made) to the Work site for installation and incorporation into the Work.

9.3.3.8 The Contractor shall provide to the Owner a release of lien or other suitable certification by the seller of the materials, in addition to paid invoices, verifying that the Contractor has valid title to all materials for which payment is requested. The seller, however, shall not be required to waive his rights for recovery against Contractor or any surety if his contract is breached.

9.3.4 The Contractor warrants that title to all Work, materials and equipment covered by an Application for Payment will pass to the Owner, either by incorporation in the construction or upon the receipt of payment by the Contractor, whichever occurs first, free and clear of all liens, claims, security interests or encumbrances, hereinafter referred to as "liens". The Contractor further warrants that no Work, materials or equipment covered by an Application for Payment will have been acquired by the Contractor or by any other person performing Work at the site or furnishing materials and equipment for the Work that is subject to an agreement under which an interest therein or an encumbrance thereon is retained by the seller or otherwise imposed by the Contractor or such other person.

9.3.5 The Contractor's Application for Payment shall provide that the payment request attests that all Work for which the request is made has been completed in full according to all the requirements of the Contract Documents. By submitting his Application for Payment, the Contractor also represents that he has no knowledge that any Subcontractors or suppliers have not been fully and timely paid and that, insofar as he knows, the only outstanding items for payment with respect to the Contract are those to be paid from the funds for which application is being made.

9.4 CERTIFICATES FOR PAYMENT

9.4.1 The A/E will, within seven (7) calendar days after the receipt of the Contractor's Application for Payment, recommend a Certificate for Payment to the Owner, for such amount as the A/E determines is properly

due, with his reasons for any withholding or adjusting a Certificate as provided in Paragraph 9.6, Payments Withheld.

9.4.2 After the Certificate for Payment is recommended by the A/E, the Owner will review it and make any changes deemed necessary by the Owner's representative. The recommendation of the Certificate for Payment by the A/E does not waive or limit the Owner's right to reduce the amount of the payment due to the Contractor as determined to be appropriate by the Owner.

9.4.3 The recommendation of a Certificate for Payment will constitute a representation by the A/E to the Owner, based on his observations at the site as provided in Article 2, Architect/Engineer, and the data comprising the Application for Payment, that the Work has progressed to the point indicated; that, to the best of his knowledge, information and belief: (1) the quality of the Work is in accordance with the Contract Documents (subject to an evaluation of the Work for conformance with the Contract Documents upon Substantial or Final Completion, to the results of any subsequent tests required by or performed under the Contract Documents, to minor deviations from the Contract Documents correctable prior to completion, and to any specific qualifications stated in his Certificate); and that (2) the Contractor is entitled to payment in the amount certified. However, by recommending a Certificate for Payment, the A/E shall not thereby be deemed to represent that he has made exhaustive or continuous on-site inspections to check the quality or quantity of the Work or that he has reviewed the construction means, methods, techniques, sequences or procedures, or that he has made any examination to ascertain how or for what purpose the Contractor has used the moneys previously paid on account of the Contract Sum.

9.4.3.1.1 The Application for Payment shall be on a form approved by the City. Payment for stored material delivered but not incorporated in the work will be the invoiced amount only. Stored materials drawdown shall be approved by the Owner. Submit applicable invoices with Application for Payment. Monthly partial payment request shall be submitted in **TRIPLICATE** to Owner’s representative for approval by the 25th of the month so that the Owner can approve payment request by the first working day of the next month. Partial payments shall be made on a monthly basis on or before the end of the next month for which the Work was performed, in accordance with the Contract Documents.

9.4.3.1.2 The Owner shall pay to the Contractor 95 percent of the total amount due and the Owner shall retain five (5) percent of the amount due until all work has been performed strictly in accordance with the Contract Documents and until such work has been accepted by the Owner.

9.5.1 The Owner shall make payment in the manner and within thirty (30) calendar days after receipt of the Certificate of Payment from the A/E based upon the Owner's approval or adjustment of said Certificate. The Contractor shall be paid the amount approved or adjusted by the Owner, less 5% retainage which is being held to assure faithful performance; provided however, that said retainage is not applicable to Time and Material Change Orders.

9.5.1.1 In relation to punch list or other uncompleted Work and in lieu of a portion of the above-specified five-percent 5% retainage, the Owner may, at its sole discretion, elect to retain fixed amounts directly relating to the various items of uncompleted Work. All amounts withheld shall be included in the Final Payment.

9.5.2 The Contractor shall, within seven (7) days after receiving payment from the Owner, do one of the following:

9.5.2.1 Pay all Subcontractors for the proportionate share of the total payment received from the Owner for Work performed by each Subcontractor under the Contract; or

9.5.2.2 Notify the Owner and Subcontractor(s), in writing, of his intention to withhold all or part of the Subcontractor's payment with the reason for nonpayment.

9.5.3 The Contractor shall make payment to Subcontractors as heretofore specified. Each payment shall reflect the percentage actually retained, if any, from payments to the Contractor on account of such Subcontractor's Work.

9.5.4 The Contractor shall provide the Owner with his social security number, if an individual, or his federal identification number, if a corporation, partnership, or other entity.

9.5.5 The Contractor shall pay unpaid Subcontractors interest on payments that are not made in accordance with this Article 9.5, Progress Payments. The rate of interest shall be in compliance with the Prompt Payment section of the Virginia Public Procurement Act of the Code of Virginia. The Contractor shall, by an appropriate agreement with each Subcontractor, require each Subcontractor to make payments to his Sub-subcontractors according to all the same requirements as provided in this Article 9.5 Progress Payments.

9.5.6 The Owner may, upon written request, furnish to any Subcontractor, if practicable, information regarding the percentages of completion or the amounts applied for by the Contractor and the action taken thereon by the Owner on account of Work done by such Subcontractor.

9.5.7 Neither the Owner nor the A/E shall have any obligation to pay or to see to the payment of any monies to any Subcontractor except as may otherwise be required by law.

9.5.8 No Certificate for Payment, nor any payment, nor any partial or entire use or occupancy of the Project by the Owner, shall constitute an acceptance of any Work not in accordance with the Contract Documents, nor shall it waive any right or claim by Owner based upon the Work, or any portion of the Work, including Work for which payment has been made, not conforming to the requirements of the Contract Documents.

9.6 PAYMENTS WITHHELD

9.6.1 The Owner may withhold the payment in whole or in part, if necessary to reasonably protect the Owner. If the A/E is unable to make representations as provided in subparagraph 9.4.3 and to recommend payment in the amount of the application, he will notify the Owner as provided in subparagraph 9.4.1. If the Contractor and the Owner cannot agree on a revised amount, the Owner will promptly issue a Certificate for Payment for the amount for which he is able to make representations with respect to payment, due for Work performed. The Owner may also decline to certify or make payment because of subsequently discovered evidence or subsequent observations, and the Owner may nullify the whole or any part of any Certificate for Payment previously issued.

9.6.2 The Owner may withhold from the Contractor so much of any payment approved by the A/E, as may in the judgment of the Owner be necessary:

.1 To protect the Owner from loss due to defective work not remedied;

.2 To protect the Owner upon receipt of notice of the filing in court or in an arbitration proceeding as may be required in any third party contract, of verified claims of any persons supplying labor or materials for the Work, or other verified third party claims;

.3 To protect the Owner upon reasonable evidence that the Work will not be completed for the unpaid balance of the Contract Sum;

.4 To protect the Owner upon reasonable evidence that the Work will not be completed within the Contract Time established by this Contract; or

.5 To protect the Owner upon the Contractor's failure to properly schedule and coordinate the Work in accordance with or as required by the Contract Documents, or failure to provide progress charts, revisions, updates or other scheduling data as required by the Contract Documents, or upon the Contractor's failure to provide as-built drawings as required herein, or upon Contractor's failure to otherwise substantially or materially comply with the Contract Documents.

9.6.3 If required by the Contract Documents, the Contractor shall, concurrent with his submission of the Construction Schedule, submit a practicable and realistic payment schedule showing the dates on which the Contractor will submit each and every Application for Payment and the amount he expects to receive for each and every monthly progress payment. If during the performance of the Work, the Contractor expects to receive an amount for a monthly progress payment larger than that indicated on the payment schedule, the Contractor shall notify the Owner at least thirty (30) days in advance of that payment so that the necessary allocation of funds can be processed. If Contractor fails to submit a practicable and realistic payment schedule, the Contractor's Application for Payment shall be honored only to the extent that the Work is actually performed and that the proportion of payments made to the Contract Sum does not exceed the proportion of the Contract Time expired as of the time of the request.

9.7 FAILURE OF PAYMENT

If the Owner does not make payment to the Contractor within the thirty (30) calendar days after receipt of the Contractor's Application for Payment by the A/E through no fault of Contractor, and the Owner otherwise not being entitled under the Contract Documents or applicable law to withhold payment, then the Contractor may, upon fifteen (15) additional days' written Notice to the Owner and the A/E, stop the Work until payment of the amount owing has been received. In such event, the Contract Sum shall be increased by the amount of the Contractor's reasonable costs of shutdown, delay and start-up, which shall be effected by appropriate Change Order as provided herein.

9.8 SUBSTANTIAL COMPLETION AND GUARANTEE BOND

9.8.1 Unless otherwise specified in Article 9.9, Final Completion and Final Payment, when the Contractor considers that the Work, or a designated portion thereof which is acceptable to the Owner, is substantially complete as defined in Article 8, Contract Time, the Contractor shall request in writing that the A/E and the Owner perform a Substantial Completion inspection. Prior to such inspection the Contractor shall:

.1 If applicable, secure a Certificate of Occupancy for the Project or a designated portion thereof; and

.2 Submit five (5) copies each of the Operations and Maintenance Manuals to the A/E as specified and one (1) copy to the Owner.

9.8.2 The Owner shall determine whether the Work is substantially complete and shall compile a punch list of items to be completed or corrected. The failure to include any items on such list does not alter the responsibility of the Contractor to complete all Work in accordance with the Contract Documents.

9.8.3 When the Owner on the basis of his inspection determines that the Work or a designated portion thereof is substantially complete, the A/E will then prepare a Certificate of Substantial Completion which shall establish the Date of Substantial Completion and shall state the responsibilities of the Owner and the Contractor for security, maintenance, heat, utilities, damage to the Work and insurance. The Certificate of Substantial Completion shall be submitted to the Owner and the Contractor for their written acceptance of the responsibilities assigned to them in such Certificate.

9.8.4 The Contractor shall have thirty (30) days from the Date of Substantial Completion to complete all items on the punch list to the satisfaction of the Owner. If the Contractor fails to complete all punch list items within the designated time, the Owner shall have the option to correct or conclude any remaining items by utilizing its own forces or by hiring others. The cost of such correction of remaining punch list items by the Owner or others shall be deducted from the final payment to the Contractor, and if the Owner has not retained sufficient funds to cover the cost, Contractor or its surety shall pay the difference within 30 days of a written demand by the Owner to do so.

9.8.5 Guarantees and warranties required by the Contract Documents shall commence on the Date of Final Completion of the Work, unless otherwise provided in the Certificate of Substantial or Final Completion, or the Contract Documents. Provided, however~~,~~ that if Contractor does not complete certain punch list items within the time period~~,~~ specified in 9.8.4, all warranties and guarantees for such incomplete Punch List items shall become effective upon issuance of final payment for the Work.

9.8.5.1 The Contractor shall guarantee for a term of one (1) year from the date of Final Completion or Final Payment, whichever comes later, (unless otherwise provided for in the Certificate(s) of Substantial or Final Completion or the Contract Documents): (1) the quality and stability of all materials equipment and Work; (2) all the Work against defects in materials, equipment or workmanship; and (3) all shrinkage, settlement or other faults of any kind which are attributable to defective materials or workmanship. The Contractor shall remedy at his own expense, when so notified in writing to do so by the Owner, and to the satisfaction of the Owner, the Work or any part thereof that does not conform to any of the warranties and guaranties described in the Contract Documents~~.~~ or that otherwise does not conform to the requirements of the Contract Documents

9.8.5.2 In order to make good the guarantee as herein required, the Contractor shall deposit with the Owner, after Substantial Completion but before Final Payment, a Guarantee Bond(s) issued by a surety licensed to do business in Virginia and otherwise acceptable to the Owner, for the faithful performance of the guarantee. Said Bond(s) shall be for a period of one (1) year from the date the guaranties and warranties commence and in the amount of five percent (5%) of the final gross value of the Contract.

9.8.5.3 The Contractor shall complete repairs during the guarantee period~~,~~ within five (5) working days after the receipt of Notice from the Owner, and if the Contractor shall fail to complete such repairs within the said five (5) working days, the Owner may employ such other person or persons as it may deem proper to make such repairs and pay the expenses thereof out of any sum retained by it, provided nothing herein contained shall limit the liability of the Contractor or his surety to the Owner for non-performance of the Contractor's obligations at any time.

9.8.6 The issuance of the Certificate of Substantial Completion does not indicate final acceptance of the Work by the Owner, and the Contractor is not relieved of any responsibility for the Work except as specifically stated in the Certificate of Substantial Completion.

9.8.7 Upon Substantial Completion of the Work, or designated portion thereof, and upon application by the Contractor and certification by the A/E, the Owner shall make payment, adjusted for retainage and payments withheld, if any, for such Work or portion thereof, as provided in the Contract Documents.

9.8.8 Should the Owner determine that the Work or a designated portion thereof is not substantially complete, he shall provide the Contractor a written Notice stating why the Work or designated portion is not substantially complete. The Contractor shall expeditiously complete the Work and shall re-request in writing that the Owner perform a Substantial Completion inspection.

9.9 FINAL COMPLETION AND FINAL PAYMENT

9.9.1 A Certificate of Final Completion shall be issued by the A/E prior to final payment. At the Owner's sole option, this Final Completion Certificate may be issued without a Certificate of Substantial Completion. The Contractor, prior to application for Final Payment and within the time specified for completion of the Work, shall complete all Work, to include punch list items and provide operation and maintenance manuals and as-built data, for the Work, as completed and in place. Said Certificate of Final Completion shall be issued, even if a Certificate of Substantial Completion has been issued previously and temporary authority to operate the Work has been granted.

9.9.1.1 The Certificate of Final Completion shall certify that all Work has been completed in accordance with Contract Documents and is ready for use by the Owner.

9.9.2 For all projects where Substantial Completion Certificates have been issued for various portions of the Work, at differing times, the Contractor shall request and the Owner shall, prior to final payment, issue a Certificate of Final Completion which certifies that all required Work, including punch list items, has been completed in accordance with the Contract Documents.

9.9.3 Neither the final payment nor any remaining retainage shall become due until the Contractor submits to the A/E the following:

.1 An Application for Payment for all remaining monies due under the -Contract.

.2 Consent of surety to final payment;

.3 If required by the Owner, other data establishing payment or satisfaction of all such obligations, such as receipts, releases and waivers of claims arising out of the Contract, to the extent and in such form as may be designated by the Owner. If any Subcontractor refuses to furnish waiver of claims satisfactory to the Owner, the Contractor may furnish a bond satisfactory to the Owner to indemnify Owner against any such claim. If any such claim remains unsatisfied after all payments are made, the Contractor shall refund to the Owner all monies that the latter may be compelled to pay in discharging such claim, including all costs and reasonable attorneys' fees;

.4 As-built drawings, operation and maintenance manuals and other project closeout submittals, as required by the Contract Documents;

.5 Construction releases as required by the Contract Documents from each property owner on whose property an easement for construction of the Work has been obtained by the Owner, such release to be in the forms to be provided by the Owner. This release is for the purpose of releasing the Owner and the Contractor from liability, claims, and damages arising from construction operations on or adjacent to the easement and includes proper restoration of the property after construction. It shall be the Contractor's sole responsibility to obtain all such releases and furnish them to the Owner; and

.6 A written certification that:

.1 The Contractor has reviewed the requirements of the Contract Documents,

.2 The Work has been inspected by the Contractor for compliance with all requirements of the Contract Documents,

.3 Pursuant to this inspection, the Contractor certifies and represents that the Work complies in all respects with the requirements of the Contract Documents,

.4 The Contractor further certifies and represents that all equipment and systems have been installed in accordance with the Contract Documents and have been tested in accordance with specification requirements and are operational, and

.5 The Contractor hereby certifies and represents that the Work is complete in all respects and ready for final inspection.

9.9.4 Upon receipt of the documents required in subparagraph 9.9.3 and upon receipt of a final Application for Payment, the A/E and Owner will promptly make a final inspection. When the A/E finds the Work acceptable under the Contract Documents and the Contract fully performed, he will issue within seven (7) days a final Certificate for Payment and a Final Certificate of Completion.

The Certificate of Completion will state that to the best of his knowledge, information and belief, and on the basis of his observations and inspections, the Work has been completed in accordance with the terms and conditions of the Contract Documents and that the entire balance designated in the final Certificate for Payment is due and payable. The final Certificate for Payment will constitute a further representation that the conditions precedent to the Contractor's being entitled to final payment as set forth in Subparagraph 9.9.3 have been fulfilled. The Owner shall review the Certificate of Payment and shall accept it and issue final acceptance, or reject it and notify the Contractor, within ten (10) days. Final payment to the Contractor shall be made within thirty (30) days after final acceptance. All prior estimates and payments, including those relating to Change Order work, shall be subject to correction by this final payment.

9.9.5 The making of Final Payment shall constitute a waiver of all claims by the Owner, except those arising from:

.1 Unsettled claims;

.2 Faulty, defective, or non-conforming Work discovered or appearing after Substantial or Final Completion;

.3 Failure of the Work to comply with the requirements of the Contract Documents;

.4 Terms of any warranties or guarantees required by the Contract Documents; or

.5 Fraud or bad faith committed by the Contractor or any subcontractor or supplier during performance of Work but discovered by Owner after Final Payment.

9.9.6 The acceptance of Final Payment shall constitute a waiver of all claims by the Contractor, except those previously made in writing and so identified by the Contractor~~,~~ as unsettled at the time of the final Application for Payment. No payment, however, final or otherwise, shall operate to release the Contractor or his sureties from any obligations under this Contract or the Performance, Payment, or Guarantee Bonds.

ARTICLE l0 PROTECTION OF PERSONS AND PROPERTY

10.1 SAFETY PRECAUTIONS AND PROGRAMS

10.1.1 The Contractor shall be responsible for initiating, maintaining and supervising all safety precautions and programs in connection with the Work. The requirement applies continuously throughout the Contract performance, until Final Payment is made, and is not limited to regular working hours.

10.2 SAFETY OF PERSONS AND PROPERTY

10.2.1 The Contractor shall take all reasonable precautions for the safety of, and shall provide all reasonable protection to prevent damage, injury or loss to:

.1 All persons performing any of the Work and all other persons who may be affected thereby;

.2 All the Work and all materials and equipment to be incorporated therein, whether in storage on or off the site, under the care, custody or control of the Contractor or any of his Subcontractors or Sub-subcontractor's. Machinery, equipment and all hazards shall be guarded or eliminated in accordance with the safety provisions of the Manual of Accident Prevention in Construction published by the Associated General Contractors of America, to the extent that such provisions are not in contravention of applicable law; and

.3 Other property at the site or adjacent thereto, including trees, shrubs, lawns, walks, pavements, roadways, structures and utilities not designated for removal, relocation or replacement in the course of construction.

10.2.2 The Contractor shall give all notices and comply with all applicable laws, ordinances, codes, rules, regulations, permits, resolutions and lawful orders of any public authority bearing on the safety of persons or property or their protection from damage, injury or loss.

The Contractor shall at all times safely guard the Owner's property from injury or losses in connection with the Contract. Contractor shall at all times safely guard and protect his Work and adjacent property as provided by law and the Contract Documents, from damage. All passageways, guard fences, lights and other facilities required for protection by local authorities or local conditions must be provided and maintained without additional cost to the Owner.

10.2.3 The Contractor shall erect and maintain, as required by existing conditions and progress of the Work, all reasonable safeguards for safety and protection, including posting danger signs and other warnings against hazards, promulgating safety regulations and notifying owners and users of adjacent utilities.

10.2.4 When the use or storage of explosives or other hazardous materials or equipment is necessary for the execution of the Work, the Contractor shall exercise the utmost care and shall carry on such activities under the supervision of properly qualified personnel.

10.2.5 The Contractor is responsible for the proper packing, shipping, handling and storage (including but not limited to shipment or storage at the proper temperature and humidity) of materials and equipment to be incorporated in the Work, so as to insure the preservation of the quality and fitness of the materials and equipment for proper installation and incorporation in the Work, as required by the Contract Documents.

For example, but not by way of limitation, Contractor shall, when necessary, place material and equipment on wooden platforms or other hard and clean surfaces and not on the ground and/or place such material and equipment under cover or in any appropriate shelter or facility. Stored materials or equipment shall be located so as to facilitate proper inspection. Material and equipment that is delivered crated shall remain crated until ready for installation. Lawns, grass plots or other private property shall not be used for storage purposes without the written permission of the owner or lessee unless otherwise within the terms of the easements obtained by the Owner.

10.2.6 In the event of any indirect or direct damage to public or private property referred to in Paragraphs 10.2.1.2 and 10.2.1.3, caused in whole or in part by an act, omission or negligence on the part of the Contractor, any Subcontractor, any Sub-subcontractor, or anyone directly or indirectly employed by any of them or by anyone for whose acts any of them may be liable, the Contractor shall at his own expense

and cost promptly remedy and restore such property to a condition equal to or better than existing before such damage was done. The Contractor shall perform such restoration by underpinning, replacing, repairing, rebuilding, replanting, or otherwise restoring as may be required or directed by the Owner, or shall make good such damage in a satisfactory and acceptable manner. In case of failure on the part of the Contractor to promptly restore such property or make good such damage, the Owner may, upon two (2) calendar days written Notice, proceed to repair, replace, rebuild or otherwise restore such property as may be necessary and the cost thereof, or a sum sufficient in the judgment of the Owner to reimburse the owners of property so damaged, will be deducted from any monies due or to become due the Contractor under the Contract. If insufficient monies remain due or will become due to pay such sum, Contractor or its surety shall, within 30 days of receipt of a written demand from Owner to do so, pay Owner such sum.

10.2.7 The Contractor shall designate a responsible member of his organization at the site whose duty shall be the prevention of accidents and the protection of material, equipment and other property. This person shall be the Contractor's superintendent unless otherwise designated by the Contractor in writing to the Owner.

10.2.8 The Contractor shall not load or permit any part of the Work to be loaded so as to endanger the safety of any portion of the Work.

10.2.9 The Contractor shall give notice in writing at least forty-eight (48) hours before breaking ground, to all persons, Public Utility Companies, owners of property having structures or improvements in proximity to site of the Work, superintendents, inspectors, or those otherwise in charge of property, streets, water pipes, gas pipes, sewer pipes, telephone cables, electric cables, railroads or otherwise, who may be affected by the Contractor's operation, in order that they may remove any obstruction for which they are responsible and have representative(s) on site to see that their property is properly protected. Such notice does not relieve the Contractor of responsibility for any damages and claims. Nor does such notice relieve the Contractor from his responsibility to defend and indemnify the Owner from actions resulting from the Contractor’s performance of such work in connection with or arising out of the Contract.

10.2.10 The Contractor shall protect all utilities encountered while performing its work, whether indicated on the Contract Drawings or not. The Contractor shall maintain utilities in service until moved or abandoned. The Contractor shall exercise due care when excavating around utilities and shall restore any damaged utilities to the same condition or better as existed prior to starting the Work, at no cost to the Owner. The Contractor shall maintain operating utilities or other services, even if they are shown to be abandoned on the drawings, in service until new facilities are provided, tested and ready for use.

10.2.11 The Contractor shall return all improvements on or about the site and adjacent property which are not shown to be altered, removed or otherwise changed to conditions which existed prior to starting the Work.

10.2.12 The Contractor shall protect the Work, including but not limited to, the site, stored materials and equipment, excavations, and excavated or stockpiled soil or other material, intended for use in the Work, and shall take all necessary precautions to prevent or minimize damage to same and to prevent detrimental effect upon his performance or that of his Subcontractors, caused by or due to rain, snow, ice, run-off, floods, temperature, wind, dust, sand and flying debris. For example, but not by way of limitation, Contractor shall, when necessary, utilize temporary dikes, channels or pumping to carry-off, divert or drain water, and shall as necessary tie-down or otherwise secure the Work and employ appropriate covers and screens.

10.3 OBLIGATION OF CONTRACTOR TO ACT IN AN EMERGENCY

10.3.1 In case of an emergency that threatens immediate loss or damage to property and/or safety of life, the Contractor shall act to prevent threatened loss, damage, injury or death. The Contractor shall notify the Owner of the situation and all actions taken immediately thereafter. If the Contractor fails to act and any loss, damage, injury or death occurs that could have been prevented by the Contractor's prompt and immediate action, the Contractor shall be fully liable to the Owner or any other party for all costs, damages, claims, actions, suits, costs of defense, and all other expenses arising therefrom or relating thereto.

10.3.2 Prior to commencing the Work and at all times during the performance of the Work, the Contractor shall provide the Owner two, twenty-four hour (24) emergency phone numbers where his representatives can be contacted at any time.

ARTICLE 11 INSURANCE FOR CONTRACTS

11.1 CONTRACTOR'S INSURANCE

11.1.1 During the term of this Contract, the Contractor shall procure and maintain insurance coverages with insurance companies rated by A. M. Best Company as A – VIII or better. The company(ies) shall be authorized to do business under the laws of the Commonwealth of Virginia and be acceptable to the City of Lynchburg and shall provide the following minimum types of insurance:

a. **Commercial General Liability Insurance** – This will cover claims for Bodily Injury, Property Damage, Personal and Advertising Injury, Products and Completed Operations, which may arise from operations under the Contract, whether such operations be performed by the Contractor or by any Subcontractor or Independent Contractor, or by anyone directly or indirectly employed by any of them. Such insurance shall include coverages "X", "C" and "U" for explosion, collapse of other structures and underground utilities, as well as Contractual Liability Insurance covering the requirements outlined in the General Conditions. This insurance shall name the City, the City Council and its employees as additional insureds ***by endorsement*** to the Commercial General Liability policy. Such policy shall not have a restriction on the limits of coverage provided to the City of Lynchburg as an additional insured. The City of Lynchburg shall be entitled to protection up to the full limits of the Contractor's policy regardless of the minimum requirements specified in this Contract. If endorsements to the Commercial General Liability insurance policies cannot be made, then separate policies providing such protection shall be purchased by the Contractor.

1. The Policy shall have the following ***minimum*** limits:

$1,000,000 Each Occurrence Limit
$1,000,000 General Aggregate Limit
$1,000,000 Personal and Advertising Injury Limit
$1,000,000 Products and Completed Operations Aggregate Limit
$5,000 Medical Expense Limit

This insurance shall include the following provisions and /or endorsements:

1) The General Aggregate limit shall apply on a "per project" and on a "per location" basis;
2) Coverage shall apply to all liability arising from all premises and operations conducted by the Contractor, Subcontractors and independent contractors;
3) The Contractor agrees that liability arising from Products and Completed Operations will be covered. Such liability coverage will be maintained for two years after completion of the Work.

4) The Contractor shall require each of his Subcontractors to procure and maintain Commercial General Liability Insurance of the type specified in these Contract Documents in the minimum amounts required by the Owner and the Contractor (which shall be the amounts required by this paragraph 11.1.1. of Contractor unless otherwise agreed in writing by Owner), during the term of their subcontracts.

b. **Worker's Compensation and Employer's Liability Insurance** for the Contractor's employees engaged in the Work under this Contract, in accordance with statutory requirements of the Commonwealth of Virginia. The Contractor shall require each of his Subcontractors to provide Worker's Compensation and Employer's Liability Insurance for all of the Subcontractor's employees engaged on such subcontracts. If any class of employees engaged on Work under the Contract is not protected under the Worker's Compensation statute, the Contractor shall provide similar protection for these employees in amounts not less than the legal requirements. The amount of Employer's Liability Insurance for the Contractor and each of his Subcontractors shall be not less than:

$100,000 per employee for Bodily Injury.
$100,000 per employee for disease
$500,000 per policy for disease

The Worker's Compensation and Employer's Liability Insurance policy shall include an "all states" or "other states" endorsement.

c. **Commercial Automobile Liability Insurance**, including coverage for owned, hired, non owned and borrowed vehicles used in the work with ***minimum*** limits of $1,000,000 Combined Single Limit per occurrence. This insurance shall name the City, the City Council and its employees as additional insureds ***by endorsement*** to the Commercial Automobile Liability policy. Such policy shall not have a restriction on the limits of coverage provided to the City of Lynchburg as an additional insured. The City of Lynchburg shall be entitled to protection up to the full limits of the Contractor’s policy regardless of the minimum requirements specified in this Contract.

d. **Umbrella Liability or Excess Liability** Insurance with the following minimum limits of:

$5,000,000 Each Occurrence
$5,000,000 Annual Aggregate

The following policies shall be scheduled as underlying policies:

Commercial General Liability
Commercial Automobile Liability
Employers Liability

This insurance shall name the City, the City Council and its employees as additional insureds ***by endorsement*** to the Umbrella or Excess Liability policy. Such policy shall not have a restriction on the limits of coverage provided to the City of Lynchburg as an additional insured. The City of Lynchburg shall be entitled to protection up to the full limits of the Contractor’s policy regardless of the minimum requirements specified in this Contract.

11.1.2 Proof of insurance for each type of coverage listed herein shall be provided within 10 days after issuance of the award letter for the Contract, and no Work shall proceed unless all such insurance is in effect. The Contractor shall not allow any Subcontractor to commence work on his subcontract until all such insurance of the Subcontractor has been so obtained and approved by the Contractor and found to be in accordance with the requirements set forth herein. The Contractor certifies by commencement of

the Work that his insurance and that of Subcontractors is in effect and meets the requirements set forth herein.

11.1.3 The Contractor shall purchase and maintain required liability and all other insurance as is appropriate for the Work being performed and furnished. The insurance shall provide protection from claims which may arise out of or result from Contractor's performance and furnishing of the Work and Contractor's other obligations under the Contract Documents, whether it is to be performed or furnished by Contractor, any Subcontractor or Supplier, or by anyone directly or indirectly employed by any of them to perform or furnish any of the Work, or by anyone for whose acts any of them may be liable:

a. claims under Worker's Compensation, Employers Liability, disability benefits, and other similar employee benefit acts;

b. claims for damages because of bodily injury, occupational sickness or disease, or deathof Contractor's employees;

c. claims for damages because of bodily injury, sickness or disease, or death of any person other than Contractor's employees;

d. claims for damages insured by personal injury liability coverage which are sustained: (1) by any person as a result of an offense directly or indirectly related to the employment of such person by Contractor; or (2) by any other person for any other reason;

e. claims for damages, other than to the Work itself, because of injury to or destruction of tangible property wherever located, including loss of use resulting therefrom; and

f. claims for damages because of bodily injury or death of any person or property damage arising out of the ownership, maintenance, or use of any motor vehicle.

11.1.4 The insurance required to be purchased and maintained by the Contractor shall:

a. include completed operations insurance;

b. with respect to any other insurance coverage written on a claims-made basis, remain in effect for at least 2 years after final payment (and Contractor shall furnish the City and A/E evidence satisfactory to the City of continuation of such insurance at final payment and 1 year thereafter);

c. contain a cross liability or severability of interest clause or endorsement. Insurance covering the specified additional insureds shall be primary insurance, and all other insurance carried by the additional insureds shall be excess insurance.

11.1.5 All of the aforesaid insurance policies must be endorsed to provide that the insurance company ***shall give 30 days written notice to the City*** if the policies are to be terminated or if any changes are made during the Contract period which will affect in any way the insurance provided pursuant to such policy. Before starting the Work, the Contractor shall provide the City with a copy of each policy that he and each of his Subcontractors is required to carry in accordance with this Article 11, together with receipted bills evidencing proof of premium payment. These policies shall contain endorsements to the policies naming the City of Lynchburg as an additional insured as required.

11.1.6 Nothing contained herein shall effect, or shall be deemed to affect, a waiver of the City's sovereign immunity under law.

ARTICLE 12 CHANGES AND MODIFICATIONS IN THE WORK

12.1 CHANGES IN THE WORK

12.1.1 The Owner, without invalidating the Contract and without notice to the surety, may order a change to the Work consisting of additions, deletions or other revisions to the general scope of the Contract, or changes in the sequence of the performance of the Work. The Contract Sum and the Contract Time shall be adjusted accordingly. All such changes in the Work shall be authorized by Change Order, Modification, or Change Directive, and all Work involved in a change shall be performed in accordance with the terms and conditions of the Contract Documents. If the Contractor should proceed with a change in the Work upon an oral order, by whomsoever given, it shall constitute a waiver by the Contractor of any claim for an increase in the Contract Sum and/or Contract Time, on account thereof.

12.2 FIELD ORDER

12.2.1 A Field Order is a written order to the Contractor signed by the Owner's designated representative, interpreting or clarifying the Contract Documents or directing the Contractor to perform minor changes in the Work. Any work relating to the issuance of a Field Order shall be performed promptly and expeditiously and without additional cost to the Owner and within the Contract Time, unless the Contractor submits a Proposed Change Order, defined below, which is approved by the Owner. Field Orders shall be numbered consecutively by date of issuance by the Owner.

12.3 OWNER CHANGE REQUEST

12.3.1 An Owner Change Request is a written request from the Owner to the Contractor that describes a proposed change in the Work. The Contractor is required to submit a complete proposal for the total cost and additional time, if any, necessary to perform the proposed change in the Work. Owner Change Requests shall be numbered consecutively by date of issuance by the Owner.

12.4 CONTRACTOR'S PROPOSED CHANGE ORDER

12.4.1 A Contractor's Proposed Change Order is a written request from the Contractor to the Owner requesting a change in the Contract Sum and/or Contract Time. A Contractor's Proposed Change Order is submitted as a proposal in response to a Owner Change Request or as a claim for an increase in the Contract Sum or Contract Time pursuant to the issuance of a Field Order, or as a result of unforeseen circumstances, such as an unknown site conditions.

Change Orders for unforeseen site conditions will only be entertained if the Contractor has not accepted responsibility for the unforeseen site conditions pursuant to other provisions in the Contract Documents. A Contractor's Proposed Change Order must be submitted within twenty (20) calendar days of the issuance of a Owner Change Request or a Field Order or the discovery of an unforeseen circumstance. The Contractor shall not be entitled to any adjustment to the Contract Time or Contract Sum if Contractor fails to comply strictly with the requirements of the preceding sentence. Contractor's Proposed Change Orders shall be numbered consecutively by date of issuance by the Contractor. The Contractor shall also indicate on the Proposed Change Order the number of the Owner Change Request or the Field Order to which it responds. The Contractor understands and agrees to the City's provisions and policy regarding Change Orders as outlined in Article 1, section 1.1.2 of these General Conditions.

12.4.2 In the case of unit price items, it is understood and agreed by the Contractor that the estimates of the quantities in unit price items are approximate only and are presented solely for the purpose of comparing bids and may not represent the actual amount of work to be performed. The Contractor, therefore, understands and agrees that the Owner reserves the right to increase, decrease or eliminate

entirely the quantity of work to be done under any item. If called upon to do more work under any unit price item named in the Bid Documents, he will perform all such additional work and accept as payment the unit price named in the proposal, subject to the 20% deviation limitations specified in subparagraph 12.4.2.2.

12.4.2.1 The Contractor's Proposed Change Order shall be determined by applicable unit prices, if any, as set forth in the Contract.

12.4.2.2 However, if changes in quantities are of an item increase the actual work to more than twenty percent (20%) of the original bid quantity for that item, or decrease quantities of that item more than 20% of the original bid quantity for that item, then the Owner or the Contractor shall have the right to request a decrease or an increase in the unit price for the item for quantities greater than 120% or less than 80% of the original bid quantity for that item.

12.4.2.3 It shall be understood that such unit prices shall constitute full payment for the extra work performed, including, but not limited to, “general conditions” costs, plant, materials, labor, equipment, overhead, profit, and safety requirements.

12.4.3 If no such unit prices are set forth, the Contractor's proposal shall be on a lump sum basis and shall be itemized and segregated by labor, equipment, and materials for the various components of the change in the Work (no aggregate labor total will be acceptable) and shall be accompanied by signed proposals of any Subcontractors who will perform any portion of the change in the Work and of any persons who will furnish materials or equipment for incorporation therein.

12.4.3.1 The portion of the proposal relating to labor, whether by the Contractor's forces or the forces of any of its Subcontractors, may include reasonably anticipated gross wages of job site labor, including foremen, who will be directly involved in the change in the Work (for such time as they will be so involved), plus separately identified payroll costs (including premium costs of overtime labor, if overtime is authorized, Social Security, Federal or State unemployment insurance taxes and fringe benefits required by collective bargaining agreements entered into by the Contractor or any such Subcontractor in connection with such labor).

12.4.3.2 The portion of the proposal relating to materials may include the reasonably anticipated direct costs to the Contractor or to any of its Subcontractors of materials to be purchased for incorporation in the change in the Work, plus transportation and applicable sales or use taxes.

12.4.3.3 The proposal may further include the Contractor's and any of his Subcontractor's reasonably anticipated equipment rental costs, except small hand tools, in connection with the change in the Work.

12.4.4 Base Cost is defined as the total of labor, material and equipment rentals as described in subparagraphs 12.4.3.1, 12.4.3.2 and 12.4.3.3. The actual net cost in money to the Owner for the change in the Work shall be computed as follows:

.1 If the Contractor performs the change in the Work without use of Subcontractors or sub-subcontractors, his compensation will be the Base Costs as described above, plus a maximum mark-up of 15% for overhead and profit.

.2 If the work is performed by a bona fide Subcontractor, the Subcontractor's compensation will be the Base Costs as described above plus a maximum mark-up of 15% for overhead and profit. The

Contractor's compensation will be a maximum mark-up of five percent (5%) of the Subcontractors Base Costs for his overhead and profit.

.3 If the Work is performed by a bona fide Sub-subcontractor, the Subcontractor's compensation will be the Base Costs as herein described, plus a maximum mark-up of 15% for overhead profits. The mark-up of any Sub-subcontractor's work by the Contractor and all intervening tiers of Subcontractors shall not exceed a total of 10%.

12.4.5 The mark-up on the cost of labor, materials, and equipment described in Paragraphs 12.4.4.1, 12.4.4.2, and 12.4.4.3 shall be all the compensation to which the Contractor, Subcontractors and Sub-subcontractor are entitled for all indirect costs associated with or relating to the change in the Work including, but not limited to, labor and/or equipment inefficiency, changes in sequence, delays, interferences, impact on unchanged work, gross receipts tax, superintendent, small tools, reproduction, administration, insurance, unrelated safety requirements, temporary structures and offices, all other general and administrative, home office and field office expenses.

12.4.6 The Proposed Change Order may also include the cost of increases in premiums for the Payment Bond and the Performance Bond, provided coverage for the cost of the change in Work results in such increased costs. At the Owner's request, the Contractor shall provide proof of his notification to the surety of the change in the Work and of the surety's agreement to include such change in its coverage. The cost of the increase in premiums shall not be marked up.

12.4.7 In the event that it is necessary to increase the Contract Time in order to perform the change in the Work, the Contractor shall provide an estimate of the increase in the Contract Time as part of the Proposed Change Order. The Contractor's request for a time extension shall be evaluated in accordance with the criteria described in Article 8.3, Claims for Time Extensions.

12.4.8 If the Contractor's Proposed Change Order is rejected by the Owner as being within the scope of the Work required by the Contract Documents, the Owner may, at its sole option and discretion, direct the Contractor to perform the Work which is the subject of the said Proposed Change Order, with claimed compensation to be accounted for pursuant to 12.6 and to be subject to the procedures of Article 13. The Contractor shall then promptly proceed with said Work. Nothing herein shall excuse the timely performance by the Contractor of the Work because any Proposed Change Order is pending.

12.5 CHANGE ORDER

12.5.1 A Change Order is a written order to the Contractor signed by the Owner, issued after execution of the Contract, authorizing a change in the Work or an adjustment in the Contract Sum and/or the Contract Time. The Contract Sum and the Contract Time may be changed only by Change Order. A Change Order signed by the Contractor indicates his agreement therewith, including the adjustment in the Contract Sum and/or the Contract Time. Change Orders shall be numbered consecutively by date of issuance by the Owner and shall, if applicable, indicate the number of the Field Order(s), Request for Proposal(s) and/or Proposed Change Order(s) to which they relate.

12.5.1.1 If the Owner determines that the Contractor's Proposed Change Order, submitted pursuant to Article 12.4 for a change in the Contract Sum or Contract Time, is acceptable, the Owner shall prepare and issue a Change Order which will authorize the Contractor to proceed with the change in the Work with the adjustment to Contract Sum and Contract Time stated in the Proposed Change Order, or as otherwise may be agreed upon by the parties. The amounts stated in the Change Order for the adjustment to Contract Sum and Contract Time for the change in the Work shall be binding on the parties.

12.5.2 After issuance of the Change Order, the Contractor shall ensure that the amount of the Performance and Payment Bond coverage has been revised to reflect the increase in the Contract Sum due to the Change Order. Notwithstanding the foregoing, Contractor's failure to do so shall not release any surety from its obligations under any bonds.

12.6 CHANGE DIRECTIVE

12.6.1 If Owner and Contractor cannot agree as to whether something constitutes a change to the Work originally contemplated by the Contract Documents, or if they cannot agree as to the adjustment to the Contract Sum or Contract Time required for what Owner acknowledges to be a change to the Work constituting Extra Work, Owner may, in his sole discretion, issue a written Change Directive directing Contractor to perform such work. Contractor shall then promptly proceed with the work at issue. Owner may elect, in its sole discretion, to have the compensation or claimed compensation for such work accounted for on either a time and material basis or lump sum basis as described in 12.6.2 and 12.6.3.

12.6.2 If Owner elects to have the compensation and/or claimed compensation accounted for on a time and materials basis, the following procedures apply:

12.6.2.1 Change Directive work, the compensation or claimed compensation for which is being accounted for on a time and material basis shall be performed, whether by the Contractor's forces or the forces of any of its Subcontractors' or Sub-subcontractors', at actual cost to the entity performing the Work (without any charge for administration, clerical expense, supervision or superintendent of any nature whatsoever). The percent mark-ups for the Contractor, Subcontractors and Sub-subcontractor's shall be as described in subparagraphs 12.4.4 and 12.4.5.

12.6.2.2 Prior to starting the Change Directive work on a time and material basis, the Contractor shall notify the Owner in writing as to what labor, materials, equipment or rentals are to be used for the change or claimed change in the Work. During performance, the Contractor shall submit to the Owner daily time and material tickets, which shall list the categories and amounts of labor and equipment for which Change Directive compensation is to be charged for the previous work day. Such tickets shall specifically include the following information: location and description of the change in the Work, the classification of labor employed, including names and social security numbers of laborers, labor trades used, man hours, wage rates, insurance, taxes and fringe benefits, equipment and materials suppliers' quotations with detailed break-out and pricing, rental equipment hours and rates, and materials quantities and unit prices and such other evidence of cost as the Owner may require.

12.6.2.3 The Contractor shall commence submission of daily time and material tickets immediately upon commencement of the Change Directive work and continue to submit them until completion of the Change Directive work. The Owner may require authentication of all time and material tickets and invoices by persons designated by the Owner for such purpose.

12.6.2.4 No payment will be made to the Contractor for any portion of the Change Directive work that Owner acknowledges to be Extra Work unless and until such daily time and material tickets and invoices are submitted. The submission of any such ticket or invoice shall not constitute an acknowledgment by the Owner that the items thereon were reasonably required for the Change Directive work.

12.6.2.5. For any work performed on a time and material basis, the Contractor shall submit its complete submission of the reasonable actual cost and time to perform the change in the Work within twenty (20) days after such Work has been completed. If Change Directive work includes both Work that Owner acknowledges to be Extra Work and work that Owner disputes to be Extra Work, Contractor shall clearly segregate its accounting for the two. The Owner shall review the costs and time submitted by the Contractor on the basis of reasonable expenditures and savings of those performing the Change Directive work. If such costs and time are acceptable to the Owner, or if the parties otherwise agree to the actual reasonable cost to perform the Change Directive work, a Change Order will be issued for the cost and time agreed upon. The amounts stated in the Change Order for the cost and time to perform the Change Directive work shall be binding upon the parties.

12.6.3 If Owner elects to have the compensation or claimed compensation accounted for on a lump sum basis, Owner may make a unilateral determination of a reasonable adjustment in Contract Sum and Contract Time due to the Change Directive. Any unresolved dispute about the reasonableness of Owner's unilateral determination shall be subject to Article 13, Claims and Dispute Procedure.

12.7 DECREASES AND WORK NOT PERFORMED (Deductive Change Orders)

12.7.1 Should it be deemed expedient by the Owner to decrease the dimensions, quantity of material or Work, or vary in any other way the Work required by the Contract Documents, the Owner may direct by written Change Order, such decreases to be made or performed without in any way affecting the validity of the Contract. The Contractor shall~~,~~ comply with the Change Order from the Owner. The difference in expense occasioned by such decrease shall be deducted from the amount payable under this Contract.

12.7.2 When Work is deleted from the Contract by Owner, the amounts to be credited to the Owner shall reflect the same current pricing as if the Work were being added to the Contract at the time the deletion is ordered, and Contractor shall provide documentation for a credit as specified in Article 12.5.4. If such deleted materials and equipment shall have already been purchased and stored on site and cannot be used in other projects, cannot be returned for credit or cannot be returned for credit at the price paid by the Contractor at the time of purchase, the Contractor shall be entitled, upon proper documentation and certification, to an adjustment in the pricing of the credit to avoid hardship to the Contractor. If necessary in order to establish such reasonable value, the Contractor may be required to submit a detailed breakdown of his original bid and all documents upon which Contractor's bid was based for the items or Work involved.

12.7.3 If Work is not performed, and such deletion of Work was not directed or approved by the Owner, the Owner shall ascertain the amount of the credit due.

12.8 CHANGES IN LINE AND GRADE

12.8.1 The Owner reserves the right to make such alterations in the line and grade of various structures or pipe lines shown on the drawings, as may be necessitated by conditions found during construction or that in the judgment of the Owner appears advisable. Such alterations shall in no way affect the validity of the Contract

12.8.1.1 In case of a unit price contract, if such changes increase the amount of the Work or materials, the Contractor will be paid according to the quantity of Work actually done at the prices established for such Work under the Contract.

12.8.1.2 In case of a lump sum contract, the price for the Work shall be determined as specified in Article 12.4, Proposed Change Order.

12.9 SUBSURFACE CONDITIONS FOUND DIFFERENT

12.9.1 Should the Contractor encounter subsurface and/or latent conditions at the site materially differing from those shown on the drawings or indicated in the specifications, he shall immediately give Notice to the Owner of such conditions before they are disturbed. The Owner shall thereupon promptly investigate the conditions and if he finds that they materially differ from those shown on the drawings or indicated in the specifications, he shall at once make such changes in the drawings and/or specifications as he may find necessary. Any increase or decrease of cost resulting from such changes shall be adjusted in the manner provided herein for adjustments as to extra and/or additional work and changes. Notwithstanding the foregoing, if the Contract Documents indicate elsewhere that excavation is to be on an unclassified basis, Contractor shall not be entitled to any adjustment to the Contract Sum or Contract Time based upon this 12.9.

12.10 OTHER CLAIMS

If the Contractor claims that additional cost or time is involved because of, but not limited to, (1) any written interpretation pursuant to Article 2, Architect/Engineer, (2) any order by the Owner to stop the Work pursuant to Article 3, Owner, where the Contractor was not at fault, (3) failure of payment by the Owner pursuant to Article 9 Payments and Completion, or (4) any written order for a minor change in the Work issued pursuant to Article 12.8, Changes in Line and Grade~~;~~, the Contractor shall make such claim as provided in Section 12, Changes and Modification in the Work~~.~~, and Article 13, Claims and Dispute Procedure.

ARTICLE 13 CLAIMS AND DISPUTE PROCEDURE

Any Claims by the Contractor arising under or relating to the Contract or the Contract Documents shall only be resolved as follows:

13.1. INITIAL NOTICE, SUBMISSION OF CLAIM, AND CONSIDERATION.

a. The Contractor shall give the Owner and the A/E written notice of any Claim within ten (10) days of the beginning of the occurrence of the event leading to the Claim. The written notice shall be a document from the Contractor addressed to the Owner's and A/E's officials or employees designated by the Contract Documents to receive such notice, or if no one is so designated, to the Owner's City Manager and to the A/E. The written notice shall clearly state the Contractor's intention to make a claim, shall describe the occurrence involved, and shall be transmitted in a manner to ensure receipt by the Owner and A/E within the ten (10) days. The Contractor shall submit the Claim and any supporting data to the Owner and A/E within thirty (30) days after the occurrence giving rise to the Claim ends. The burden shall be on the Contractor to substantiate that it has given written notice and submitted its Claim in accordance with this provision.

b. The Claim must (i) be certified under oath as true and correct by a principal of Contractor; (ii) must be for specific relief; (iii) if any money is sought, must specify the dollar amount sought; and (iv) must contain sufficient supporting documentation to reasonably allow its consideration, including without limitation, any documentation required by the Contract Documents. The burden shall be on the Contractor to substantiate the Claim.

c. The Contractor shall comply with all other terms and conditions of the Contract Documents, including without limitation, those in Articles 8 and 12, as applicable. No decision by the A/E on

a claim shall be binding on the Owner, but such decision shall have whatever effect on the Contractor that the Contract Documents provide.

d. Following consideration by the A/E, and following initial, informal consideration by the Owner's City Manager or his designee, the parties shall endeavor to resolve any Claim through direct negotiations, and if such direct negotiations fail, and if the Owner requests, by non-binding mediation conducted pursuant to the Rules of the American Arbitration Association, with the site of the mediation being Lynchburg, Virginia.

e. Should the Claim remain unresolved for more than 60 days after it is submitted, then the City Manager or his designee shall, within no later than 90 days after the Claim's submission, render a written decision on the Claim on behalf of the Owner . The Contractor may not institute any legal action with respect to the Claim until after the City Manager or his designee renders his written decision or 90 days from its receipt by the City Manager has passed, whichever comes first. The only effect of the failure by the City Manager or his designee to render a decision within this 90-day period is to allow the Contractor to institute a legal action pursuant to this provision without having to wait for a decision on the Claim concerned.

13.2 APPEAL OF DENIAL OF CLAIM.

a. If the Owner denies in whole or part a Claim by Contractor or more than 90 days have passed since the Claim was received by the City Manager but no written decision has been issued, the Contractor may appeal denial of the claim by instituting an action in the Lynchburg Circuit Court, Lynchburg, Virginia, or if the subject or amount in controversy is within its jurisdiction, the Lynchburg General District Court, Lynchburg, Virginia, and may thereafter pursue all available appeals in Virginia state courts, to the extent they have jurisdiction.

b. The Contractor must initiate its appeal of the Claim within 180 days of the date it first has the right to do so or the Claim will be barred and the Owner’s decision will be binding and conclusive.

c. The Contractor may not amend its Claim on appeal to increase the amount of money sought.

d. In the event of any Claim arising, Contractor shall continue its performance diligently during such Claim's pendency and thereafter as if no Claim had arisen. During the pendency of any Claim in connection with the payments of moneys, Contractor shall be entitled to receive payments for non-disputed items, subject to any right of set-off by Owner.

13.3 Notwithstanding anything in the Contract Documents to the contrary, the Owner may, in its discretion, assert a Claim without first resorting to any procedures contained in the Contract Documents.

13.4 "Claim" means a "claim" as defined in the Lynchburg Public Procurement Code.

13.5 Notwithstanding anything in the Contract Documents to the contrary, Owner shall not be liable to Contractor for any damages or increase in the Contract Sum due to delays to Contractor, any Subcontractor, or any other person except due to extent required by Virginia Code § 2.2-4335.

ARTICLE 14 UNCOVERING AND CORRECTION OF WORK

14.1 UNCOVERING OF WORK

14.1.1 If any portion of the Work should be covered contrary to: (1) the request of the A/E or Owner; (2) requirements specifically expressed in the Contract Documents; or (3) the requirements of applicable

permits, it must, if required in writing by the Owner, be uncovered for the Owner's and A/E's observation and shall be replaced at the Contractor's expense.

14.1.2 If any other portion of the Work has been covered which the Owner has not specifically requested to observe prior to being covered, the Owner may request to see such Work and it shall be uncovered by the Contractor. If such Work be found in accordance with the Contract Documents, the cost of uncovering and replacement shall, by appropriate Change Order, be charged to the Owner. If such Work be found not in accordance with the Contract Documents, the Contractor shall pay such costs unless it is found that this condition was caused solely by the Owner, in which event the Owner shall be responsible for the payment of such costs. If such Work be found not in accordance with the Contract Documents and the condition was caused by a separate contractor, Contractor may proceed against said separate contractor as provided in Article 6, Work by Owner or by Separate Contractors.

14.2 WARRANTY AND CORRECTION OF WORK

14.2.1 The Contractor guarantees and warrants to the Owner all Work as follows:

.1 That all materials and equipment furnished under this Contract will be new and the best of its respective kind unless otherwise specified;

.2 That all Work will be of first-class quality and free of omissions and faulty, imperfect or defective material or workmanship;

.3 That the Work shall be entirely watertight and leakproof in accordance with all applicable industry customs and practices, and shall be free of shrinkage and settlement which are attributable to defective materials or workmanship;

.4 That the Work, including but not limited to, mechanical and electrical machines, devices and equipment shall be fit and fully usable for its intended and specified purpose and shall operate satisfactorily with ordinary care;

.5 That consistent with requirements of the Contract Documents the Work shall be installed and oriented in such a manner as to facilitate unrestricted access for the operation and maintenance of fixed equipment; and

.6 That the Work will be free of abnormal or unusual deterioration which occurs because of poor quality materials or workmanship.

14.2.2 All Work not conforming to guarantees and warranties specified in the Contract Documents, including substitutions not properly approved and authorized, may be considered defective. If required by the Owner, the Contractor shall furnish satisfactory evidence as to the kind and quality of materials and equipment furnished and installed.

14.2.3 The Contractor shall within five (5) working days after receipt of written Notice from the Owner during the performance of the Work, reconstruct, replace or correct all Work rejected by the A/E or Owner as defective, as failing to conform to the Contract Documents, or as not in accordance with the guarantees and warranties specified in the Contract Documents , whether observed before or after Substantial Completion and whether or not fabricated, installed or completed. The Contractor shall bear all costs of reconstructing, replacing or correcting such rejected Work, including compensation for the A/E's additional services made necessary thereby.

14.2.4 If, within one (1) year after the Date of Final Completion of the Work or designated portion thereof or within one (1) year after acceptance by the Owner of designated equipment or within such longer period

of time as may be prescribed by law or by the terms of any applicable special warranty required by the Contract Documents, any of the Work is found to be defective, not in accordance with the Contract Documents, or not in accordance with the guarantees and warranties specified in the Contract Documents, the Contractor shall correct it within five (5) working days after receipt of a written Notice from the Owner to do so unless the Owner has previously given the Contractor a written acceptance of such condition pursuant to 14.3, Acceptance of Faulty, Defective or Non-Conforming Work. This obligation shall survive termination of the Contract. The Owner shall give such Notice within a reasonable time after discovery of the condition.

14.2.5 Subject to limitation as prescribed by law, if at any time deficiencies in the Work are discovered which are found to have resulted from fraud or misrepresentation, or an intent or attempt to defraud the Owner by the Contractor, any Subcontractor or supplier, the Contractor will be liable for replacement or correction of such Work and any damages which Owner has incurred related thereto, regardless of the time limit of any guarantee or warranty.

14.2.6 Any materials or other portions of the Work, installed, furnished or stored on site which are not of the character or quality required by the specifications, or are otherwise not acceptable to the Owner, shall be immediately removed and replaced by the Contractor to the satisfaction of the Owner, when notified to do so by the Owner.

14.2.7 If the Contractor fails to correct defective or nonconforming Work as required by Articles 13.2.3 and 13.2.4, or if the Contractor fails to remove defective or nonconforming Work from the site, as required by Article 13.2.6, the Owner may elect to either correct such Work in accordance with Article 3.5, Owner’s Right to Carry Out the Work, or remove and store materials and equipment at the expense of the Contractor. If the Contractor does not pay the cost of such removal and storage within ten (10) days thereafter, the Owner may, upon ten additional days written Notice, sell such Work at auction or at public or private sale and shall account for the net proceeds thereof, after deducting the costs of the sale and all of the costs that should have been borne by the Contractor, including compensation for the A/E's additional services made necessary thereby. If such proceeds of sale do not cover all costs indicated in the previous sentence, the difference shall be charged to the Contractor and an appropriate Change Order shall be issued. If the payments then or thereafter due the Contractor are not sufficient to cover such amount, the Contractor or its surety shall pay the difference to the Owner.

14.2.8 The Contractor shall bear the cost of making good all work of the Owner, separate contractors or others, destroyed or damaged by such correction or removal required under this Article.

14.3 ACCEPTANCE OF FAULTY, DEFECTIVE OR NON-CONFORMING WORK

If the Owner prefers to accept faulty, defective or nonconforming Work, he may do so instead of requiring its removal and correction, in which case a Change Order will be issued at Owner's option, to reflect a reduction in the Contract Sum in an amount to be determined by the Owner.

ARTICLE 15 TERMINATION OF THE CONTRACT

15.1 CONTRACTOR'S RIGHT TO STOP WORK OR TERMINATE CONTRACT

If the Work should be stopped under an order of any court or other public authority for a period of ninety (90) days through no fault of the Contractor or anyone providing services, materials or equipment through him, or if the Owner should fail to pay to the Contractor within thirty (30) days any sum for which a Certificate of Payment has been certified when no dispute exists as to the sum due and Owner has no right to withhold payment under any provision of the Contract Documents, then the Contractor may, upon ten (10) days written Notice to the Owner, stop Work or terminate the Contract and recover from the Owner payment for the cost of the Work actually performed, together with overhead and profit thereon, but profit on the Work performed shall be recovered only to the extent that the Contractor can demonstrate that he

would have had profit on the entire Contract if he had completed the Work. The Contractor may not receive profit or any other type of compensation for parts of the Work not performed. The Contractor may recover the reasonable cost of physically closing down the Site, but no other costs of termination. The Owner may offset any claims it may have against the Contractor against the amounts due to the Contractor. In no event shall termination of the Contract by the Contractor terminate the obligations of the Contractor's surety on its payment and performance bonds.

15.2 OWNER'S RIGHT TO TERMINATE CONTRACT FOR CAUSE

15.2.1 The Owner may terminate the Contract for cause based upon any of the following grounds:

.1 If the Contractor should be adjudged as bankrupt, or if he should make a general assignment for the benefit of his creditors, or if a receiver should be appointed on account of his insolvency.

.2 If the Contractor should refuse or should repeatedly fail, except in cases for which extension of time is provided, to supply enough properly skilled workmen or proper materials and equipment.

.3 If the Contractor should fail to make prompt payment to subcontractors or suppliers of material of labor.

.4 If the Contractor should disregard laws, ordinances, codes, regulations, or the written instructions of the Architect/Engineer or the Owner.

.5 If the Contractor be in substantial violation of any provision of the Contract Documents.

15.2.2 For termination for cause based upon the grounds in 15.2.1.1, Owner may terminate without prior notice and without giving Contractor any opportunity to rectify the basis for termination. For termination for cause based upon any other grounds, prior to termination of the Contract, the Owner shall give the Contractor and his surety Notice followed by a ten (10) day period during which the Contractor and/or his surety may rectify the basis for the Notice. If rectified to the satisfaction of the Owner within said ten (10) days, the Owner may rescind its notice of termination. If not, the termination for cause shall become effective at the end of the ten (10) day notice period. Notwithstanding the foregoing, the Owner may, in writing, postpone the effective date of the termination for cause, at its sole discretion, if it should receive reassurances from the Contractor and/or his surety that the basis for the termination will be remedied within a time and in a manner which the Owner finds acceptable. If at any time after such postponement, the Owner determines that Contractor and/or his surety has not or is not likely to rectify the causes of termination in an acceptable manner or within the time allowed, then the Owner may immediately terminate the Contract for cause, without the necessity of allowing any further opportunity by the Contractor and/or surety to rectify the basis for the Notice, by notifying the Contractor and his surety in writing of the termination. In no event shall termination for cause terminate the obligations of the Contractor's surety on its payment and performance bonds.

15.2.3 Upon termination of the Contract, the Contractor shall immediately cease Work, and the Owner may take possession of the site and of all materials, tools and equipment thereon and finish the Work by whatever method he may deem expedient. In such case, the Contractor shall not be entitled to receive any further payment until the Owner has finally completed the Work through its own resources or those of a subsequent contractor. If the Owner's damages, including the expense of finishing the Work, compensation for additional design, managerial and administrative services, any liquidated damages, and any claims by the Owner, shall exceed the unpaid balance of the Contract Sum, the Contractor shall pay the difference to the Owner, together with any other expenses of terminating the Contract and having it completed by others. If the unpaid balance of the Contract Sum exceeds Owner's damages, including the costs of finishing the Work, compensation for additional design, managerial and administrative services,

any liquidated damages and any claims by Owner, together with any other expenses of terminating the Contract and having it completed by others, such excess shall be paid to the Contractor.

15.2.4 If it should be judicially determined that the Owner improperly terminated this Contract for cause, then the termination shall be deemed to be a termination for the convenience of the Owner, with Contractor's recovery limited to what is allowed for a termination for convenience under the Contract Documents.

15.2.5 Termination of the Contract under this Section is without prejudice to any other right or remedy of the Owner.

15.3 OWNER'S RIGHT TO TERMINATE CONTRACT FOR CONVENIENCE

15.3.1 Owner may terminate this Contract, in whole or in part, at any time without cause upon giving the Contractor written Notice of such termination. Upon such termination, the Contractor shall immediately cease Work and remove from the site all of its labor forces and such of its materials and equipment as Owner elects not to purchase or to assume in the manner hereinafter provided. Upon such termination, the Contractor shall take such steps as Owner may require to assign to the Owner the Contractor's interest in all subcontracts and purchase orders designated by Owner. After all such steps have been taken to Owner's satisfaction, the Contractor shall receive as full compensation for termination and assignment the following:

.1 Amounts due for Work performed in accordance with the Contract through the date of termination.

.2 Reasonable compensation for the actual cost of demobilization incurred by the Contractor as a direct result of such termination. The Contractor shall not be entitled to any compensation or damages for lost profits or for any other type of contractual compensation or damages other than those provided by the preceding sentence. Upon payment of the foregoing, Owner shall have no further obligations to Contractor of any nature.

15.3.2 In no event shall termination for the convenience of the Owner terminate the obligations of the Contractor's surety on its payment and performance bonds.

15.3.3 After receipt of a Notice of termination, the Contractor shall promptly submit to the Owner his termination claim. Such claim shall be submitted no later than forty-five (45) days from the effective date of termination. Upon failure of the Contractor to submit his termination claim within the time allowed, the Owner may determine, on the basis of information available to it, the amount, if any, due to the Contractor by reason of the termination.

15.4 CONTRACTOR'S RESPONSIBILITIES UPON TERMINATION

15.4.1 After receipt of a notice of termination pursuant to 15.3, Owner's Right to Terminate Contract for Convenience, the Contractor shall mitigate any damages to the extent reasonably possible.

15.4.2 In addition to the provisions of 15.4.1, the Contractor shall:

.1 At the option of the Owner, assign to the Owner, in the manner, at the time, and to the extent directed by the Owner, all of the right, title, and interest of the Contractor under the orders and subcontracts so terminated, in which case the Owner shall have the right, in its discretion, to settle or pay any or all claims arising out of the termination of such orders and subcontracts;

.2 Transfer title and deliver to the Owner in the manner, at the times, and to the extent, if any, directed by the Owner:

a) The fabricated or un-fabricated parts, work in process, completed Work, supplies, and other material and equipment procured as a part of, or acquired in connection with the performance of the Work terminated by the Notice of Termination, and

b) The completed or partially completed drawings, releases, information, manuals and other property which, if the Contract had been completed, would have been required to be furnished to the Owner;

.3 Complete performance of such part of the Work as shall not have been terminated by the Notice of Termination; and

.4 Take such action as may be necessary, or as the Owner may direct, for the protection and preservation of the property related to this Contract which is in the possession of the Contractor and in which the Owner has or may acquire an interest.

SPECIAL PROVISIONS FOR

KEMPER STREET IMPROVEMENTS

STATE PROJECT: U000-118-204, C-501

LYNCHBURG, VIRGINIA

COMMISSION NO. 2387D

OCTOBER 2013

MATTERN & CRAIG
CONSULTING ENGINEERS • SURVEYORS
701 FIRST STREET, S.W.
ROANOKE, VA 24016
(540) 345-9342

SPECIAL PROVISIONS
TABLE OF CONTENTS

KEMPER STREET IMPROVEMENTS

STATE PROJECT: U000-118-204, C-501

LYNCHBURG, VIRGINIA

DIVISION 1 - GENERAL PROVISIONS.....1-1 thru 1-104

DIVISION 2 - MATERIALS.....2-1 thru 2-38

DIVISION 3 - ROADWAY CONSTRUCTION.....3-1 thru 3-33

DIVISION 4 - BRIDGES AND STRUCTURES.....4-1 thru 4-11

DIVISION 5 - INCIDENTAL CONSTRUCTION.....5-1 thru 5-18

DIVISION 6 - ROADSIDE DEVELOPMENT..... Not Used

DIVISION 7 - FINISHES.....7-1 thru 7-30

PROJECT SPECIFIC SPECIAL PROVISIONS:

Construction Quality Control Plan.....SP-1 thru SP-11

Special Provision for Queue Detection System SP-12

(**c100ai03**-0112) **GENERAL PROJECT REQUIREMENTS, SUPPLEMENTAL SPECIFICATIONS (SSs), SPECIAL PROVISIONS (SPs) AND SPECIAL PROVISION COPIED NOTES (SPCNs)**

This project shall be constructed in accordance with: the plans; the *Virginia Department of Transportation Road and Bridge Specifications*, dated 2007; the *Virginia Department of Transportation Road and Bridge Standards*, dated 2008; the 2011 edition of the *Virginia Work Area Protection Manual*; the 2009 edition of the *MUTCD* and the current *Virginia Supplement to the MUTCD;* and the Supplemental Specifications, Special Provisions and Special Provision Copied Notes in this contract.

Special Provision Copied Notes in this contract are designated with "(SPCN)" after the date.

The information enclosed in parenthesis "()" at the left of each Special Provision Copied Note in this contract is file reference information for Department use only. The information in the upper left corner above the title of each Supplemental Specification and Special Provision in this contract is file reference information for Department use only.

The Department has identified the system of measurement to be used on this particular project as imperial. Any imperial unit of measure in this contract with an accompanying expression in a metric unit shall be referred to hereinafter as a "dual unit" measurement. Such a "dual unit" measurement is typically expressed first in the imperial unit followed immediately to the right by the metric unit in parenthesis "()" or brackets "[]" where parenthesis is used in the sentence to convey other information. Where a "dual unit" of measure appears in this project, only the imperial unit shall apply. The accompanying metric unit shown is not to be considered interchangeable and mathematically convertible to the imperial unit and shall not be used as an alternate or conflicting measurement.

12-1-11 (SPCN)

(**c102lg0**-0708) **REQUIRED ATTENDANCE OF PROJECT SHOWING** - Section 102.04(a) of the Specifications is amended to include the following:

Prospective Bidders are hereby advised that attendance of the Project Showing is a prerequisite for submitting a bid proposal for this project. The "Notice of Advertisement for Bids" will designate the date, time and location for showing the work for interested parties. Prospective Bidders shall register in writing with the Engineer at the Project Showing and all attending parties will be noted in the Project Showing letter. Failure on the part of the Prospective Bidder to attend the Project Showing for this project and to register with the Engineer will be cause for rejection of the Bidder's proposal.

1-14-08 (SPCN)

(**c105hf1**-0309) **SECTION 105.06 SUBCONTRACTING** of the Specifications is amended to include the following:

Any distribution of work shall be evidenced by a written binding agreement on file at the project site. Where no field office exists, such agreement shall be readily available upon request to Department inspector(s) assigned to the project.

The provisions contained in Form FHWA-1273 specifically, and other federal provisions included with the prime Contract are generally applicable to all Federal-aid construction projects and must be made a part of, and physically incorporated into all contracts, as well as, appropriate subcontracts for work so as to be binding in those agreements.

12-19-08 (SPCN)

(**c105j00**-0708) **SECTION 105.14(a) DETOURS** of the Specifications is replaced by the following:

(a) **Detours:** Detours may be indicated on the plans or in the special provisions or used with the approval of the Engineer. Detours over existing off-project roadways will be designated and the roadways maintained by the Department except municipalities shall be responsible for roadway maintenance within their own corporate limits. Temporary directional sign panels for off-project detours will be furnished by the Department. Responsibility for installation and maintenance of the temporary directional sign panels shall be in accordance with Section 512.03(a) of the Specifications.

If any project is located wholly or in part within the corporate limits of a municipality and through traffic is to be detoured at the request of the municipality, the municipality will:

1. Provide and maintain the detours within the corporate limits

2. Furnish, install and maintain the temporary directional sign panels

The provision of detours and signing of alternate routes will not relieve the Contractor of the responsibility of ensuring the safety of the public or from complying with any requirements of these specifications affecting the rights of the public, including those concerning lights and barricades. Maintenance of all other detours shall be the responsibility of the Contractor.

Right of way for temporary highways or bridges required by these provisions will be furnished by the Department.

1-14-08 (SPCN)

(**c106fp0**-0609) **SECTION 106.03(b) SOURCES FURNISHED BY THE CONTRACTOR** of the Specifications is replaced by the following:

(b) **Sources Furnished by the Contractor**: The use of material from sources furnished by the Contractor will not be permitted until approved by the Engineer and written authority is issued for the use thereof.

The Contractor shall acquire the necessary rights to take material from these sources and shall pay all costs related thereto, including costs which may result from an increase in length of haul. The Department will review and evaluate the material and reserves the right to reject any material from a previously approved source which fails visual examination or test.

1-14-08 (SPCN)

(**c107fg0**-0708) **SECTION 107.13(b) LABOR RATE FORMS** of the Specifications is amended by the following:

The Contractor is advised that labor rate forms will not apply to this contract.

1-14-08 (SPCN)

I. DESCRIPTION

The intent of this provision is to establish procedures, processes and guidelines for making decisions and managing communications regarding work under contract on construction and maintenance projects. The information contained herein is not meant to be all inclusive but to serve as a minimal general framework for promoting efficient and effective communication and decision making at both the project and, if needed, executive administrative level. It is also not meant to override the decision-making processes or timeframes of specific contract requirements.

II. DEFINITIONS

For the purposes of this provision the following terms will apply and be defined as follows:

Submittals – Documents required by the contract that the Contractor must submit for the Department's review, acceptance or approval. These may include shop drawings, working drawings, material test reports, material certifications, project progress schedules, and schedule updates. The Contractor shall produce submittals as early as practicable when required by the contract so as not to delay review and determination of action.

Confirmation of verbal instructions (COVI) - Contractor requested written confirmation of agreements and instructions developed in negotiations with the Department concerning the Work under contract. Agreements must be able to be quantified using existing contract procedures and will, in the vast majority of cases, not impact contract time and cost. When time and/or cost are impacted, they must be clearly spelled out in the COVI.

Requests for information (RFI) – Requests generated by either the Contractor or the Department that the other party supplies information to better understand or clarify a certain aspect of the Work.

Requests for owner action (ROA) – Requests when the Contractor asks that the Department take certain action(s) the Contractor feels is required for proper completion of a portion of the Work or project completion.

Contract change requests (CCR) - Request where the Contractor asks the Department to make an equitable adjustment to the contract because of excusable and/or compensable events, instructions that have or have not been given or other work requiring time and/or cost beyond that specified or envisioned within the original contract.

Requests for contractor action (RCA) – Request generated by the Department where the Department asks the Contractor to take certain action that is in the best interests of the project and/or is required for proper completion of a portion of the Work or for project completion.

Contract change directives (CCD) – Directive by the Department which instructs the Contractor to perform work beyond that specified or envisioned in the original contract and which may specify instructions, time, and cost(s) to make an equitable adjustment to the original contract.

Responsible Person – The individual in the normal or escalated resolution process, for either the Contractor or the Department, having the direct authority, responsibility and accountability to formulate and respond to each category of information request.

III. PROCESS FOR DECISION MAKING

Project teams composed on responsible individuals directly involved in the administration, prosecution, and inspection of the Work from the Contractor and the Department shall define and agree upon the field decision-making process during the pre-construction conference. This information relative to the process should be written down and distributed to all parties of the process once it is established. Where there are responsibility, authority or personnel changes associated with this process such changes shall be distributed to all affected parties as quickly as practicable after they are effective so as not to delay or impede this process.

The process for making field decisions with respect to the Work detailed in the contract basically requires the following steps:

1. The Contractor and the Engineer agree on the decision-making process, the identity, authority and accountability of the individuals involved and on the cycle times for response for each category of decision.
2. The party requiring the information generates the appropriate request documents, and calls for a decision from the individual who is accountable for the particular facet of the Work under consideration within the agreed period.
3. The responding party has an internal decision-making process that supports the individual who is accountable and provides the information required within the agreed period for each category of request.
4. The party receiving the decision has an internal process for accepting the decision or referring it for further action within an agreed period of time.

The process also requires that clear and well-understood mechanisms be in place to log and track requests, document the age and status of outstanding requests and actions to be taken on requests that have not been answered within the agreed period.

Both the Department and the Contractor shall agree on the following:

- The documentation and perhaps format to be developed for each category of information requested,
- The name (as opposed to organizational position) of all individuals with the responsibility, authority and accountability to formulate and respond to each category of information requested. The District Administrator (DA) or Chief Executive Officer (CEO) of the Contractor may delegate the responsibility and authority for formulating and responding to requests, however, the accountability for meeting the established response time(s) remains with the District Administrator and CEO.
- The cycle times for each stage in the decision-making process,
- The performance measures to be used to manage the process,
- The action to be taken if cycle times are not achieved and information is not provided in a timely manner.

The following general guideline and timeframe matrix will apply to the various requests for action. Again, please note these guidelines are general in scope and may not apply to specific contract timeframes for response identified within the requirements of the Contract documents. In such cases, specific contract requirements for information shall apply.

PROCESS GUIDELINES FOR REQUESTS GENERATED BY THE CONTRACTOR

Process	Situation	Normal resolution process		Escalated process		Final resolution
		By	Within (calendar days)	By	Within	
Submittal	Where the Contractor requests the Department's review, acceptance or approval of shop drawings, materials data, test reports, project progress schedules, or other submittals required by standard Specifications or other contract language.	Department's Designated Project Manager	• Acknowledge: 3 days[1] • Accept or Return: 14 days • Final Determination\Approve: 30 days or as outlined in contract documents.	DA or their designee*	7 days	Submit ROA or CCR
Confirmation of Verbal Instruction (COVI)	Resolving routine field issues, within the framework of the Contract, in negotiation with Owner field personnel.	Department's Appropriate field personnel	• Confirmation: 1 day [2]	Submit RFI, ROA or CCR	7 days	(See process for RFI, ROA, or CCR)
Request for Information (RFI)	Requests the Department to supply information to better understand or clarify a certain aspect of the work.	Department's Designated Project Manager	• Action: 14 days (or appropriate Action Plan)	DA or their designee*	7 days	Submit ROA or CCR
Request for Owner Action (ROA)	Requests that the Department take certain action the Contractor feels is required for proper completion of a portion of the Work or project completion	Department's Designated Project Manager	• Acknowledge: 3 days [1] • Action: 14 days (or appropriate Action Plan)	DA or their designee*	7 days	Submit CCR
Contract Change Request (CCR)	Requests the Department to make an equitable adjustment to the contract because of excusable and/or compensable events, instructions that have or have not been given or other work requiring time and/or cost beyond that specified or envisioned within the original contract.	Department's Designated Project Manager	• Acknowledge: 3 days [1] • Action: 30 days (45 days if federal oversight project)	DA or their designee*	7 days	Established dispute resolution and claims process

[1] Process initiated on the last business day of a week shall be acknowledged before 5 pm on the next VDOT business day.

[2] The absence of a written confirmation from the Owner to a Contractor's written request for confirmation of a verbal instruction shall constitute confirmation of the verbal instruction.

PROCESS GUIDELINES FOR REQUESTS GENERATED BY THE OWNER

Process	Situation	Normal resolution process		Escalated process		Final resolution
		By	Within (calendar days)	By	Within	
1. RFI	Requests the Contractor to supply information to better understand or clarify a certain aspect of the work. (RFI)	Contractor's Project Superintendent	• Action: 14 days (or appropriate written Action Plan)	Contractor's Project Manager	7 days	Submit RCA or CCD
2. RCA	Requesting the Contractor take certain action(s) that is in the best interests of the project and/or is required for proper completion of a portion of the work or for project completion. (RCA)	Contractor's Project Superintendent	• Response or Action to safety and environmental issues: 1 day • Otherwise acknowledge: 3 days [1] • Action: 14 days (or appropriate Action Plan)	Contractor's Project Manager	7 days	Submit CCD
3. CCD	Instructs the Contractor to perform work beyond that specified or envisioned in the original contract and undertakes action(s) to make an equitable adjustment to the contract. (CCD)	Contractor's Project Superintendent	• Acknowledge: 3 days [1] • Action: 30 days	CEO or their designee**	7 days	Established dispute resolution and termination process

[1] Process initiated on the last business day of a week shall be acknowledged before 5 p m on next project business day.

S102CF2-0813

VIRGINIA DEPARTMENT OF TRANSPORTATION
SPECIAL PROVISION FOR
USE OF DOMESTIC MATERIAL

July 26, 2013

SECTION 102.05 PREPARATION OF BID of the Specifications is amended to include the following:

In accordance with the provisions of Section 635.410(b) of Title 23 CFR, hereinafter referred to as “Buy America”, except as otherwise specified, all iron and steel products (including miscellaneous steel items such as fasteners, nuts, bolts and washers) to be permanently incorporated for use on federal aid projects shall be produced in the United States of America regardless of the percentage they exist in the manufactured product or final form they take. Therefore, "Domestically produced in the United States of America" means all manufacturing processes must occur in the United States of America, to mean, in one of the 50 States, the District of Columbia, Puerto Rico or in the territories and possessions of the United States. Manufacturing processes are defined as any process which alters or modifies the chemical content, physical size or shape or final finish of iron or steel material) such as rolling, extruding, bending, machining, fabrication, grinding, drilling, finishing, or coating whereby a raw material or a reduced iron ore material is changed, altered or transformed into a steel or iron item or product which, because of the process, is different from the original material. For the purposes of satisfying this requirement “coating” is defined as the application of epoxy, galvanizing, painting or any other such process that protects or enhances the value of the material. Materials used in the coating process need not be domestic materials.

For the purposes herein the manufacturing process is considered complete when the resultant product is ready for use as an item in the project (e.g. fencing, posts, girders, pipe, manhole covers, etc.) or is incorporated as a component of a more complex product by means of further manufacturing. Final assembly of a product may occur outside of the United States of America provided no further manufacturing process takes place.

Raw materials such as iron ore, pig iron, processed, pelletized and reduced iron ore, waste products (including scrap, that is, steel or iron no longer useful in its present form from old automobiles, machinery, pipe, railroad rail, or the like and steel trimmings from mills or product manufacturing) and other raw materials used in the production of steel and\or iron products may, however, be imported. Extracting, handling, or crushing the raw materials which are inherent to the transporting the materials for later use in the manufacturing process are exempt from Buy America. The use of foreign source steel or iron billet is not acceptable under the provisions of Buy America. For the purposes of this provision all steel or iron material not meeting the criteria as domestically produced in the United States of America will be considered as “foreign” material. All iron and steel items will be classified hereinafter as "domestic" or "foreign", identified by and subject to the provisions herein.

Domestically produced iron or steel ingots or billets shipped outside the United States of America for any manufacturing process and returned for permanent use in a project would not comply with “Buy America” requirements.

Buy America provisions do not apply to iron or steel products used temporarily in the construction of a project such as temporary sheet piling, temporary bridges, steel scaffolding, falsework or such temporary material or product or material that remains in place for the Contractor’s convenience.

Section 635.410(b) of Title 23 CFR permits a minimal amount of steel or iron material to be incorporated in the permanent work on a federal-aid contract. The cost of such materials or products must not exceed one-tenth of one percent of the contract amount or $2500, whichever is greater. The cost of the foreign iron or steel material is defined as its monetary value delivered to the job site and supported

by invoices or bill of sale to the Contractor. This delivered to site cost must include transportation, assembly, installation and testing.

In the event the total cost of all "foreign" iron and steel product or material does not exceed one-tenth of one percent of the total contract cost or $2,500, whichever is greater, the use of such material meeting the limitations herein will not be restricted by the domestic requirements herein. However, by signing the bid, the Bidder certifies that such cost does not exceed the limits established herein.

Waivers:

With prior concurrence from Federal Highway Administration (FHWA) headquarters, the Federal Highway Division Administrator may grant a waiver to specific projects provided it can be demonstrated:

1 that the use of domestic steel or iron materials would be inconsistent with the public interest; or

2. materials or products requested for use are not produced in the United States in sufficient or reasonably available quantities and are of satisfactory quality for use in the permanent work.

The waiver request shall be submitted with supportive information to include:

1. Project number\description, project cost, waiver item, item cost, country of origin for the product, reason for the waiver, and

2. Analysis of redesign of the project using alternative or approved equal domestic products

In order to grant such a waiver the request for the waiver must be published in the Federal Register for a period not less than 15 days or greater than 60 days prior to waiving such requirement. An initial 15 day comment period to the waiver will be available to the public by means of the FHWA website: http://www.fhwa.dot.gov/construction/contracts/waivers.cfm. Following that initial 15 day period of review and comment the request for waiver will be published by the FHWA in the Federal Register. The effective date of the FHWA finding, either to approve or deny the waiver request, will be 15 days following publication in the Federal Register.

Only the FHWA Administrator may grant nationwide waivers which still are subject to the public rulemaking and review process.

Alternative Bidding Procedures:

An alternative bidding procedure may be employed to justify the use of foreign iron and\or steel. To qualify under this procedure the total project is bid using two alternatives, one based on the use of domestic products and the other, the use of corresponding foreign source steel and\or iron materials.

In accordance with the provisions of Section 103.02 the Contract will be awarded to the lowest responsive and responsible bidder who submits the lowest total bid based on furnishing domestic iron or steel unless such total exceeds the lowest total bid based on furnishing foreign iron and\or steel by more than 25 percent, in which case the award will be made to the lowest responsive and responsible bidder furnishing foreign iron and\or steel based upon furnishing verifiable supportive data. The bidder shall submit a bid based on permanently incorporating only domestic iron and\or steel in the construction of the project. The bidder may also submit a bid for the same proposed contract based on being allowed to permanently incorporate corresponding foreign iron and\or steel materials meeting the other contract requirements into the work on the contract. If he chooses to submit such a bid, that alternate bid shall clearly indicate which foreign iron and\or steel items will be permanently installed in the work as well as contain prices for all other items listed in the corresponding domestic proposal to complete a total “Foreign” bid.

In the event the contract is awarded to the bidder furnishing foreign iron and\or steel materials or items the provision for price adjustment of steel items will be permitted, however, price fluctuations shall use the U.S. index as stated in the Special Provision for Price Adjustment For Steel. The Contractor must indicate which corresponding eligible steel items he chooses price adjustment to apply. In the event the contract is awarded to a bidder furnishing foreign iron and\or steel items and during the life of that contract the Contractor discovers he can not furnish foreign iron and\or steel material as originally anticipated and agreed upon, he shall be responsible to honor the total bid price and furnish such iron and\or steel materials meeting the contract requirements from other sources as necessary to complete the work.

In the event the Contractor proposes to furnish "foreign" iron and steel and can verify a savings in excess of 25 percent of the overall project cost if bid using domestic materials, the Contractor shall submit a second complete paper bid proposal clearly marked “Foreign” including Form C-7 and supportive data supplement on all sheets. Supportive data shall list, but not be limited to, origin of material, best price offer, quantity and complete description of material, mill analysis, evidence or certification of conformance to contract requirements, etc. The “Foreign” bid shall be completed using the best price offer for each corresponding bid item supplying foreign material in the alternative bid and submit the same with the Contractor’s “Domestic” bid. The Contractor shall write the word “Foreign” by the bid total shown on Form C-7 as well as last page of Schedule of Items showing the total bid amount. The bidder shall also contact the State Contract Engineer to inform him that he is also submitting an alternate “Foreign” paper bid..

The information listed on the supportive data sheet(s) will be used to provide the basis for verification of the required cost savings. In the event comparison of the prices given, or corrected as provided in Section 103.01 of the Specifications, shows that use of "foreign" iron and steel items does not represent a cost savings exceeding the aforementioned 25 percent, "domestic" iron and\or steel and prices given there for shall be used and the "100 percent Domestic Items Total" shall be the Contractor's bid.

Certification of Compliance:

Where domestic material is supplied, prior to incorporation into the Work, the Contractor shall furnish to the Department a certificate of compliance (such as may be furnished by steel mill test reports) that all steel and\or iron products supplied to the project except as may be permitted (one-tenth of one percent of the total contract cost or $2,500, whichever is greater) and permanently incorporated into the work satisfies the domestic requirements herein. This certification shall contain a definitive statement about the origin of all products covered under the provisions of Buy America as stated herein.

In lieu of the Contractor providing personal certification, the Contractor may furnish a stepped certification in which each handler of the product, such as supplier, fabricator, manufacturer, processor, etc. furnishes an individual certification that their step in the process was domestically performed.

C-45
Rev. 2-19-09

VIRGINIA DEPARTMENT OF TRANSPORTATION

STORMWATER POLLUTION PREVENTION PLAN (SWPPP) GENERAL PERMIT FOR THE DISCHARGE OF STORMWATER FROM CONSTRUCTION ACTIVITIES CONTRACTOR AND SUBCONTRACTOR CERTIFICATION STATEMENT

Order No.: _____ Project Number: _____

Route: _____ Contract ID. #: _____

I certify under penalty of law that I understand the terms and conditions of the project contract, plans, permits, specifications and standards related to the erosion and sediment control, stormwater management and stormwater pollution prevention plan requirements for the affected activities associated with this project, the Virginia Stormwater Management Program (VSMP), and the General Permit for the Discharge of Stormwater from Construction Activities, if applicable to this project, issued by the Virginia Department of Conservation and Recreation. The VSMP Permit authorizes the storm water discharges associated with the construction activities from the project site identified and described in the bid documents and subsequent contract including any off-site support activities required for the complete fulfillment of the work therein.

Signature: _____

Name: _____

Title: _____

Contracting Firm: _____

Address: _____

Phone Number: _____

Address/Description of Site: _____
(Include off-site areas)

_____

Certified on this date: _____

(Note: This form must be returned with performance and payment bonds)

VIRGINIA DEPARTMENT OF TRANSPORTATION
SPECIAL PROVISION FOR
SECTION 107.15

December 10, 2010

Section 107.15 of the Specifications is replaced by the following:

Section 107.15—Use of Disadvantaged Business Enterprises (DBEs)

A. Disadvantaged Business Enterprise (DBE) Program Requirements

Any Contractor, subcontractor, supplier, DBE firm, and contract surety involved in the performance of work on a federal-aid contract shall comply with the terms and conditions of the United States Department of Transportation (USDOT) DBE Program as the terms appear in Part 26 of the Code of Federal Regulations (49 CFR as amended), the USDOT DBE Program regulations; and the Virginia Department of Transportation's (VDOT or the Department) Road and Bridge Specifications and DBE Program rules and regulations.

For the purposes of this provision, Contractor is defined as the Prime Contractor of the contract; and sub-contractor is defined as any DBE supplier, manufacturer, or subcontractor performing work or furnishing material, supplies or services to the contract. The Contractor shall physically include this same contract provision in every supply or work/service subcontract that it makes or executes with a subcontractor having work for which it intends to claim credit.

In accordance with 49 CFR Part 26 and VDOT's DBE Program requirements, the Contractor, for itself and for its subcontractors and suppliers, whether certified DBE firms or not, shall commit to complying fully with the auditing, record keeping, confidentiality, cooperation, and anti-intimidation or retaliation provisions contained in those federal and state DBE Program regulations. By bidding on this contract, and by accepting and executing this contract, the Contractor agrees to assume these contractual obligations and to bind the Contractor's subcontractors contractually to the same at the Contractor's expense.

The Contractor or subcontractor shall not discriminate on the basis of race, color, national origin, or sex in the performance of this contract. The Contractor shall carry out applicable requirements of 49 CFR Part 26 in the award, administration, and performance of this contract. Failure by the Contractor to carry out these requirements is a material breach of this contract, which will result in the termination of this contract or other such remedy, as VDOT deems appropriate.

All administrative remedies noted in this provision are automatic unless the Contractor exercises the right of appeal within the required timeframe(s) specified herein. Appeal requirements, processes, and procedures shall be in accordance with guidelines stated herein and current at the time of the proceedings. Where applicable, the Department will notify the Contractor of any changes to the appeal requirements, processes, and procedures after receiving notification of the Contractor's desire to appeal.

All time frames referenced in this provision are expressed in business days unless otherwise indicated. Should the expiration of any deadline fall on a weekend or holiday, such deadline will automatically be extended to the next normal business day.

B. DBE Certification

The only DBE firms eligible to perform work on a federal-aid contract for DBE contract goal credit are firms certified as Disadvantaged Business Enterprises by the Virginia Department of Minority Business Enterprise (DMBE) or the Metropolitan Washington Airports Authority (MWAA) in accordance with federal and VDOT guidelines. DBE firms must be certified in the specific work listed for DBE contract goal credit. A directory listing of certified DBE firms can be obtained from the Virginia Department of Minority Business Enterprise and the Metropolitan Washington Airports Authority Internet websites: *http://www.dmbe.virginia.gov/* ; *http://mwaa.com/362.htm*

C. Bank Services

The Contractor and each subcontractor are encouraged to use the services of banks owned and controlled by socially and economically disadvantaged individuals. Such banking services and the fees charged for services typically will not be eligible for DBE Program contract goal credit. Such information is available from the VDOT's Internet Civil Rights Division website: *http://insidevdot/C7/Civil%20Rights/default.aspx*

D. DBE Program-Related Certifications Made by Bidders\Contractors

By submitting a bid and by entering into any contract on the basis of that bid, the bidder/Contractor certifies to each of the following DBE Program-related conditions and assurances:

1. That the management and bidding officers of its firm agree to comply with the bidding and project construction and administration obligations of the USDOT DBE Program requirements and regulations of 49 CFR Part 26 as amended, and VDOT's Road and Bridge Specifications and DBE Program requirements and regulations.

2. Under penalty of perjury and other applicable penal law that it has complied with the DBE Program requirements in submitting the bid, and shall comply fully with these requirements in the bidding, award, and execution of the contract.

3. To ensure that DBE firms have been given full and fair opportunity to participate in the performance of the contract. The bidder certifies that all reasonable steps were, and will be, taken to ensure that DBE firms had, and will have, an opportunity to compete for and perform work on the contract. The bidder further certifies that the bidder shall not discriminate on the basis of race, color, age, national origin, or sex in the performance of the contract or in the award of any subcontract. Any agreement between a bidder and a DBE whereby the DBE promises not to provide quotations for performance of work to other bidders is prohibited.

4. As a bidder, good faith efforts were made to obtain DBE participation in the proposed contract at or above the goal for DBE participation established by VDOT. It has submitted as a part of its bid true, accurate, complete, and detailed documentation of the good faith efforts it performed to meet the contract goal for DBE participation. The bidder, by signing and submitting its bid, certifies the DBE participation information submitted within the stated time thereafter is true, correct, and complete, and that the information provided includes the names of all DBE firms that will participate in the contract, the specific line item(s) that each listed DBE firm will perform, and the creditable dollar amounts of the participation of each listed DBE. The specific line item must reference the VDOT line number and item number contained in the proposal.

5. The bidder further certifies, by signing its bid, it has committed to use each DBE firm listed for the specific work item shown to meet the contract goal for DBE participation. Award of

the contract will be conditioned upon meeting these and other listed requirements of 49 CFR Part 26.53 and the contract documents. By signing the bid, the bidder certifies on work that it proposes to sublet; it has made good faith efforts to seek out and consider DBEs as potential subcontractors. The bidder shall contact DBEs to solicit their interest, capability, and prices in sufficient time to allow them to respond effectively, and shall retain on file proper documentation to substantiate its good faith efforts. Award of the contract will be conditioned upon meeting these and other listed requirements of 49 CFR Part 26.53 and the contract documents.

6. Once awarded the contract, the Contractor shall make good faith efforts to utilize DBE firms to perform work designated to be performed by DBEs at or above the amount or percentage of the dollar value specified in the bidding documents. Further, the Contractor understands it shall not unilaterally terminate, substitute for, or replace any DBE firm that was designated in the executed contract in whole or in part with another DBE, any non-DBE firm, or with the Contractor's own forces or those of an affiliate of the Contractor without the prior written consent of VDOT as set out within the requirements of this provision.

7. Once awarded the contract, the Contractor shall designate and make known to the Department a liaison officer who is assigned the responsibility of administering and promoting an active and inclusive DBE program as required by 49 CFR Part 26 for DBEs. The designation and identity of this officer need be submitted only once by the Contractor during any twelve (12) month period at the preconstruction conference for the first contract the Contractor has been awarded during that reporting period. The Department will post such information for informational and administrative purposes at VDOT's Internet Civil Rights Division website.

8. Once awarded the contract, the Contractor shall comply fully with all regulatory and contractual requirements of the USDOT DBE Program, and that each DBE firm participating in the contract shall fully perform the designated work items with the DBE's own forces and equipment under the DBE's direct supervision, control, and management. Where a contract exists and where the Contractor, DBE firm, or any other firm retained by the Contractor has failed to comply with federal or VDOT DBE Program regulations and/or their requirements on that contract, VDOT has the authority and discretion to determine the extent to which the DBE contract regulations and\or requirements have not been met, and will assess against the Contractor any remedies available at law or provided in the contract in the event of such a contract breach.

9. In the event a bond surety assumes the completion of work, if for any reason VDOT has terminated the prime Contractor, the surety shall be obligated to meet the same DBE contract terms and requirements as were required of the original prime Contractor in accordance with the requirements of this specification.

E. Disqualification of Bidder

Bidders may be disqualified from bidding for failure to comply with the requirements of this Special Provision, the contract specifications, and VDOT Road and Bridge Specifications.

F. Bidding Procedures

The following bidding procedures shall apply to the contract for DBE Program compliance purposes:

1. **Contract Goal, Good Faith Efforts Specified:** All bidders evidencing the attainment of DBE goal commitment equal to or greater than the required DBE goal established for the project must submit completed Form C-111, Minimum DBE Requirements, and Form C-48, Subcontractor/Supplier Solicitation and Utilization, as a part of the bid documents.

   Form C-111 may be submitted electronically or may be faxed to the Department, but in no case shall the bidder's Form C-111 be received later than 10:00 a.m. the next business day after the time stated in the bid proposal for the receipt of bids. Form C-48 must be received within ten (10) business days after the bid opening.

   If, at the time of submitting its bid, the bidder knowingly cannot meet or exceed the required DBE contract goal, it shall submit Form C-111 exhibiting the DBE participation it commits to attain as a part of its bid documents. The bidder shall then submit Form C-49, DBE Good Faith Efforts Documentation, within two (2) business days after the bid opening.

   The lowest responsive and responsible bidder must submit its properly executed Form C-112, Certification of Binding Agreement, within three (3) business days after the bids are received. DBEs bidding as prime contractors are not required to submit Form C-112 unless they are utilizing other DBEs as subcontractors.

   If, after review of the apparent lowest bid, VDOT determines the DBE requirements have not been met, the apparent lowest successful bidder must submit Form C-49, DBE Good Faith Efforts Documentation, which must be received by the Contract Engineer within two (2) business days after official notification of such failure to meet the aforementioned DBE requirements.

   Forms C-48, C-49, C-111, and C-112 can be obtained from the VDOT website at: *http://vdotforms.vdot.virginia.gov/*

   Instructions for submitting Form C-111 can be obtained from the VDOT website at: *http://www.virginiadot.org/business/resources/const/Exp_DBE_Commitments.pdf*

2. **Bid Rejection:** The failure of a bidder to submit the required documentation within the timeframes specified in the **Contract Goal, Good Faith Efforts Specified** section of this Special Provision may be cause for rejection of that bidder's bid.

   If the lowest bidder is rejected for failure to submit the required documentation in the specified time frames, the Department may award the work to the next lowest bidder, or re-advertise the proposed work at a later date or proceed otherwise as determined by the Commonwealth.

3. **Good Faith Efforts Described:** In order to award a contract to a bidder that has failed to meet DBE contract goal requirements, VDOT will determine if the bidder's efforts were adequate good faith efforts, and if given all relevant circumstances, those efforts were made actively and aggressively to meet the DBE requirements. Efforts to obtain DBE participation are not good faith efforts if they could not reasonably be expected to produce a level of DBE participation sufficient to meet the DBE Program and contract goal requirements.

   Good faith efforts may be determined through use of the following list of the types of actions the bidder may make to obtain DBE participation. This is not intended to be a mandatory

checklist, nor is it intended to be exclusive or exhaustive. Other factors or types of efforts of similar intent may be relevant in appropriate cases:

(a) Soliciting through reasonable and available means, such as but not limited to, attendance at pre-bid meetings, advertising, and written notices to DBEs who have the capability to perform the work of the contract. Examples include: advertising in at least one daily/weekly/monthly newspaper of general circulation, as applicable; phone contact with a completely documented telephone log, including the date and time called, contact person, or voice mail status; and internet contacts with supporting documentation, including dates advertised. The bidder shall solicit this interest no less than five (5) business days before the bids are due so that the solicited DBEs have enough time to reasonably respond to the solicitation. The bidder shall determine with certainty if the DBEs are interested by taking reasonable steps to follow up initial solicitations as evidenced by documenting such efforts as requested on Form C-49, DBE Good Faith Efforts Documentation.

(b) Selecting portions of the work to be performed by DBEs in order to increase the likelihood that the DBE goals will be achieved. This includes, where appropriate, breaking out contract work items into economically feasible units to facilitate DBE participation, even when the Contractor might otherwise prefer to completely perform all portions of this work in its entirety or use its own forces;

(c) Providing interested DBEs with adequate information about the plans, specifications, and requirements of the contract in a timely manner, which will assist the DBEs in responding to a solicitation;

(d) Negotiating for participation in good faith with interested DBEs;

1. Evidence of such negotiation shall include the names, addresses, and telephone numbers of DBEs that were considered; dates DBEs were contacted; a description of the information provided regarding the plans, specifications, and requirements of the contract for the work selected for subcontracting; and, if insufficient DBE participation seems likely, evidence as to why additional agreements could not be reached for DBEs to perform the work;

2. A bidder using good business judgment should consider a number of factors in negotiating with subcontractors, including DBE subcontractors, and should take a firm's price, qualifications, and capabilities, as well as contract goals, into consideration. However, the fact that there may be some additional costs involved in finding and using DBEs is not sufficient reason for a bidder's failure to meet the contract goal for DBE participation, as long as such costs are reasonable and comparable to costs customarily appropriate to the type of work under consideration. Also, the ability or desire of a bidder to perform the work of a contract with its own organization does not relieve the bidder of the responsibility to make diligent good faith efforts. Bidders are not, however, required to accept higher quotes from DBEs if the price difference can be shown by the bidder to be excessive, unreasonable, or greater than would normally be expected by industry standards;

(e) A bidder cannot reject a DBE as being unqualified without sound reasons based on a thorough investigation of the DBE's capabilities. The DBE's standing within its industry, membership in specific groups, organizations, associations, and political or social affiliations, and union vs. non-union employee status are not legitimate causes for the rejection or non-solicitation of bids in the bidder's efforts to meet the project goal for DBE participation;

(f) Making efforts to assist interested DBEs in obtaining bonding, lines of credit, or insurance as required by VDOT or by the bidder/Contractor;

(g) Making efforts to assist interested DBEs in obtaining necessary equipment, supplies, materials, or related assistance or services subject to the restrictions contained in these provisions;

(h) Effectively using the services of appropriate personnel from VDOT and from DMBE; available minority/women community or minority organizations; contractors' groups; local, state, and Federal minority/ women business assistance offices; and other organizations as allowed on a case-by-case basis to provide assistance in the recruitment and utilization of qualified DBEs.

G. Documentation and Administrative Reconsideration of Good Faith Efforts

During Bidding: As described in the **Contract Goal, Good Faith Efforts Specified** section of this Special Provision, the bidder must provide Form C-49, DBE Good Faith Efforts Documentation, of its efforts made to meet the DBE contract goal as proposed by VDOT within the time frame specified in this provision. The means of transmittal and the risk for timely receipt of this information shall be the responsibility of the bidder. The bidder shall attach additional pages to the certification, if necessary, in order to fully detail specific good faith efforts made to obtain the DBE firms participation in the proposed contract work.

However, regardless of the DBE contract goal participation level proposed by the bidder or the extent of good faith efforts shown, all bidders shall timely and separately file their completed and executed forms C-111, C-112, C-48, and C-49, as aforementioned, or face potential bid rejection.

If a bidder does not submit its completed and executed forms C-111, or C-112, when required by this Special Provision, the bidder's bid will be considered non-responsive and may be rejected.

Where the Department upon initial review of the bid results determines the apparent low bidder has failed or appears to have failed to meet the requirements of the **Contract Goal, Good Faith Efforts Specified** section of this Special Provision and has failed to adequately document that it made a good faith effort to achieve sufficient DBE participation as specified in the bid proposal, that firm upon notification of the Department's initial determination will be offered the opportunity for administrative reconsideration before VDOT rejects that bid as non-responsive. The bidder shall address such request for reconsideration in writing to the Contract Engineer within five (5) business days of receipt of notification by the Department and shall be given the opportunity to discuss the issue and present its evidence in person to the Administrative Reconsideration Panel. The Administrative Reconsideration Panel will be made up of VDOT Division Administrators or their designees, none of who took part in the initial determination that the bidder failed to make the goal or make adequate good faith efforts to do so. After reconsideration, VDOT shall notify the bidder in writing of its decision and explain the basis for finding that the bidder did or did not meet the goal or make adequate good faith efforts to do so.

If, after reconsideration, the Department determines the bidder has failed to meet the requirements of the contract goal and has failed to make adequate good faith efforts to achieve the level of DBE participation as specified in the bid proposal, the bidder's bid will be rejected.

If sufficient documented evidence is presented to demonstrate that the apparent low bidder made reasonable good faith efforts, the Department will award the contract and reduce the DBE requirement to the actual commitment identified by the lowest successful bidder at the

time of its bid. The Contractor is still encouraged to seek additional DBE participation during the life of the contract.

However, such action will not relieve the Contractor of its responsibility for complying with the reduced DBE requirement during the life of the contract or any administrative sanctions as may be appropriate.

During the Contract: If a DBE, through no fault of the Contractor, is unable or unwilling to fulfill his agreement with the Contractor, the Contractor shall immediately notify the Department and provide all relevant facts. If a Contractor relieves a DBE subcontractor of the responsibility to perform work under their subcontract, the Contractor is encouraged to take the appropriate steps to obtain a DBE to perform an equal dollar value of the remaining subcontracted work. In such instances, the Contractor is expected to seek DBE participation towards meeting the goal during the performance of the contract.

If the Contractor fails to conform to the schedule of DBE participation as shown on the progress schedule, or at any point at which it is clearly evident that the remaining dollar value of allowable credit for performing work is insufficient to obtain the scheduled participation, and the Contractor has not taken the preceding actions, the Contractor and any aforementioned affiliates may be subject to disallowance of DBE credit until such time as conformance with the schedule of DBE participation is achieved.

Project Completion: If the Contractor fails upon completion of the project to meet the required participation, the Contractor and any prime contractual affiliates, as in the case of a joint venture, may be enjoined from bidding as a prime Contractor, or participating as a subcontractor on VDOT projects for a period of 90 days.

Prior to enjoinment from bidding or denial to participate as a subcontractor for failure to comply with participation requirements, as provided hereinbefore, the Contractor may submit documentation to the State Construction Engineer to substantiate that failure was due solely to quantitative underrun(s), elimination of items subcontracted to DBEs, or to circumstances beyond their control, and that all feasible means have been used to obtain the required participation. The State Construction Engineer upon verification of such documentation shall make a determination whether or not the Contractor has met the requirements of the contract.

If it is determined that the aforementioned documentation is insufficient or the failure to meet required participation is due to other reasons, the Contractor may request an appearance before the Administrative Reconsideration Panel to establish that all feasible means were used to meet such participation requirements. The decision of the Administrative Reconsideration Panel shall be administratively final. If the decision is made to enjoin the Contractor from bidding on other VDOT work as described herein, the enjoinment period will begin upon the Contractor's failure to request a hearing within the designated time frame or upon the Administrative Reconsideration Panel's decision to enjoin, as applicable.

H. DBE Participation for Contract Goal Credit

DBE participation on the contract will count toward meeting the DBE contract goal in accordance with the following criteria:

1. Cost-plus subcontracts will not be considered to be in accordance with normal industry practice and will not normally be allowed for credit.

2. The applicable percentage of the total dollar value of the contract or subcontract awarded to the DBE will be counted toward meeting the contract goal for DBE participation in accordance with the **DBE Program-Related Certifications Made by Bidders\Contractors** section of this Special Provision for the value of the work, goods, or services that are actually performed or provided by the DBE firm itself or subcontracted by the DBE to other DBE firms.

3. When a DBE performs work as a participant in a joint venture with a non-DBE firm, the Contractor may count toward the DBE goal only that portion of the total dollar value of the contract equal to the distinctly defined portion of the contract work that the DBE has performed with the DBE's own forces or in accordance with the provisions of this Section. The Department shall be contacted in advance regarding any joint venture involving both a DBE firm and a non-DBE firm to coordinate Department review and approval of the joint venture's organizational structure and proposed operation where the Contractor seeks to claim the DBE's credit toward the DBE contract goal.

4. When a DBE subcontracts part of the work of the contract to another firm, the value of that subcontracted work may be counted toward the DBE contract goal only if the DBE's subcontractor at a lower tier is a certified DBE. Work that a DBE subcontracts to either a non-DBE firm or to a non-certified DBE firm will not count toward the DBE contract goal. The cost of supplies and equipment a DBE subcontractor purchases or leases from the prime Contractor or the prime's affiliated firms will not count toward the contract goal for DBE participation.

5. The Contractor may count expenditures to a DBE subcontractor toward the DBE contract goal only if the DBE performs a Commercially Useful Function (CUF) on that contract.

6. A Contractor may not count the participation of a DBE subcontractor toward the Contractor's final compliance with the DBE contract goal obligations until the amount being counted has actually been paid to the DBE. A Contractor may count sixty (60) percent of its expenditures actually paid for materials and supplies obtained from a DBE certified as a regular dealer, and one hundred (100) percent of such expenditures actually paid for materials and supplies obtained from a certified DBE manufacturer.

   (a) For the purposes of this Special Provision, a regular dealer is defined as a firm that owns, operates, or maintains a store, warehouse, or other establishment in which the materials, supplies, articles, or equipment required and used under the contract are bought, kept in stock, and regularly sold or leased to the public in the usual course of business. To be a regular dealer, the DBE firm shall be an established business that regularly engages, as its principal business and under its own name, in the purchase and sale or lease of the products or equipment in question. Packagers, brokers, manufacturers' representatives, or other persons who arrange or expedite transactions will not be considered regular dealers.

   (b) A DBE firm may be a regular dealer in such bulk items as petroleum products, steel, cement, gravel, stone, or asphalt without owning, operating, or maintaining a place of business where it keeps such items in stock if the DBE both owns and operates distribution equipment for the products it sells and provides for the contract work. Any

supplementation of a regular dealer's own distribution equipment shall be by a long-term lease agreement and not on an *ad hoc* or contract-by-contract basis to be eligible for credit to meet the DBE contract goal.

(c) If a DBE regular dealer is used for DBE contract goal credit, no additional credit will be given for hauling or delivery to the project site goods or materials sold by that DBE regular dealer. Those delivery costs shall be deemed included in the price charged for the goods or materials by the DBE regular dealer, who shall be responsible for their distribution.

(d) For the purposes of this Special Provision, a manufacturer will be defined as a firm that operates or maintains a factory or establishment that produces on the premises the materials, supplies, articles, or equipment required under the contract and of the general character described by the project specifications. A manufacturer shall include firms that produce finished goods or products from raw or unfinished material, or purchase and substantially alter goods and materials to make them suitable for construction use before reselling them.

(g) A Contractor may count toward the DBE contract goal the following expenditures to DBE firms that are not regular dealers or manufacturers for DBE program purposes:

1. The entire amount of fees or commissions charged by a DBE firm for providing a bona fide service, such as professional, technical, consultant or managerial services, or for providing bonds or insurance specifically required for the performance of the federal-aid contract, if the fee is reasonable and not excessive or greater than would normally be expected by industry standards for the same or similar services.

2. The entire amount of that portion of the construction contract that is performed by the DBE's own forces and equipment under the DBE's supervision. This includes the cost of supplies and materials ordered and paid for by the DBE for contract work, including supplies purchased or equipment leased by the DBE, except supplies and equipment a DBE subcontractor purchases or leases from the prime Contractor or its affiliates.

(h) A Contractor may count toward the DBE contract goal one hundred (100) percent of the fees paid to a DBE trucker or hauler for the delivery of material and supplies required on the project job site, but not for the cost of those materials or supplies themselves, provided that the trucking or hauling fee is determined by VDOT to be reasonable, as compared with fees customarily charged by non-DBE firms for similar services. A Contractor shall not count costs for the removal or relocation of excess material from or on the job site when the DBE trucking company is not the manufacturer of or a regular dealer in those materials and supplies. The DBE trucking firm shall also perform a Commercially Useful Function (CUF) on the project and not operate merely as a pass through for the purposes of gaining credit toward the DBE contract goal. Prior to submitting a bid, the Contractor shall determine, or contact the VDOT Civil Rights Division or its district Offices for assistance in determining, whether a DBE trucking firm will meet the criteria for performing a CUF on the project. See section on **Miscellaneous DBE Program Requirements; Factors used to Determine if a DBE Trucking Firm is Performing a CUF**.

(i) The Contractor will receive DBE contract goal credit for the fees or commissions charged by and paid to a DBE broker who arranges or expedites sales, leases, or other project work or service arrangements provided that those fees are determined by VDOT to be reasonable and not excessive as compared with fees customarily charged by non-DBE firms for similar services. For the purposes of this Special Provision, a

broker is defined as a person or firm that regularly engages in arranging for delivery of material, supplies, and equipment, or regularly arranges for the providing of project services as a course of routine business but does not own or operate the delivery equipment necessary to transport materials, supplies, or equipment to or from a job site.

I. Performing a Commercially Useful Function (CUF)

No credit toward the DBE contract goal will be allowed for contract payments or expenditures to a DBE firm if that DBE firm does not perform a CUF on that contract. A DBE performs a CUF when the DBE is solely responsible for execution of a distinct element of the contract work and the DBE actually performs, manages, and supervises the work involved with the firm's own forces or in accordance with the provisions of the **DBE Participation for Contract Goal Credit** section of this Special Provision. To perform a CUF the DBE alone shall be responsible and bear the risk for the material and supplies used on the contract, selecting a supplier or dealer from those available, negotiating price, determining quality and quantity, ordering the material and supplies, installing those materials with the DBE's own forces and equipment, and paying for those materials and supplies. The amount the DBE firm is to be paid under the contract shall be commensurate with the work the DBE actually performs and the DBE credit claimed for the DBE's performance.

Monitoring CUF Performance: It shall be the Contractor's responsibility to ensure that all DBE firms selected for subcontract work on the contract, for which he seeks to claim credit toward the contract goal, perform a CUF. Further, the Contractor is responsible for and shall ensure that each DBE firm fully performs the DBE's designated tasks with the DBE's own forces and equipment under the DBE's own direct supervision and management or in accordance with the provisions of the **DBE Participation for Contract Goal Credit** section of this Special Provision. For the purposes of this provision the DBE's equipment will mean either equipment directly owned by the DBE as evidenced by title, bill of sale or other such documentation, or leased by the DBE, and over which the DBE has control as evidenced by the leasing agreement from a firm not owned in whole or part by the prime Contractor or an affiliate of the Contractor under this contract.

VDOT will monitor the Contractor's DBE involvement during the performance of the contract. However, VDOT is under no obligation to warn the Contractor that a DBE's participation will not count toward the goal.

DBEs Must Perform a Useful and Necessary Role in Contract Completion: A DBE does not perform a commercially useful function if the DBE's role is limited to that of an extra participant in a transaction, contract, or project through which funds are passed in order to obtain the appearance of DBE participation.

DBEs Must Perform The Contract Work With Their Own Workforces: If a DBE does not perform and exercise responsibility for at least thirty (30) percent of the total cost of the DBE's contract with the DBE's own work force, or the DBE subcontracts a greater portion of the work of a contract than would be expected on the basis of normal industry practice for the type of work involve, VDOT will presume that the DBE is not performing a CUF and such participation will not be counted toward the contract goal.

VDOT Makes Final Determination On Whether a CUF Is Performed: VDOT has the final authority to determine whether a DBE firm has performed a CUF on a federal-aid contract. To determine whether a DBE is performing or has performed a CUF, VDOT will evaluate the amount of work subcontracted by that DBE firm or performed by other firms and the extent of the involvement of other firms' forces and equipment. Any DBE work performed by the Contractor or by employees or equipment of the Contractor shall be subject to disallowance

under the DBE Program, unless the independent validity and need for such an arrangement and work is demonstrated.

J. Verification of DBE Participation and Imposed Damages

Within fourteen days after contract execution, the Contractor shall submit to the Responsible Engineer, with a copy to the District Civil Rights Office (DCRO), a fully executed subcontract agreement for each DBE used to claim credit in accordance with the requirements stated on Form C-112. The subcontract agreement shall be executed by both parties stating the work to be performed, the details or specifics concerning such work, and the price which will be paid to the DBE subcontractor. Because of the commercial damage that the Contractor and its DBE subcontractor could suffer if their subcontract pricing, terms, and conditions were known to competitors, the Department staff will treat subcontract agreements as proprietary Contractor trade secrets with regard to Freedom of Information Act requests. In lieu of subcontract agreements, purchase orders may be submitted for haulers, suppliers, and manufacturers. These too, will be treated confidentially and protected. Such purchase orders must contain, as a minimum, the following information: authorized signatures of both parties; description of the scope of work to include contract item numbers, quantities, and prices; and required federal contract provisions.

The Contractor shall also furnish, and shall require each subcontractor to furnish, information relative to all DBE involvement on the project for each quarter during the life of the contract in which participation occurs and verification is available. The information shall be indicated on Form C-63, DBE and SWAM Payment Compliance Report. The department reserves the right to request proof of payment via copies of cancelled checks with appropriate identifying notations. Failure to provide Form C-63 to the District Civil Rights Office (DCRO) within five (5) business days after the reporting period may result in delay of approval of the Contractor's monthly progress estimate for payment. The names and certification numbers of DBE firms provided by the Contractor on the various forms indicated in this Special Provision shall be exactly as shown on the DMBE's or MWAA's latest list of certified DBEs. Signatures on all forms indicated herein shall be those of authorized representatives of the Contractor as shown on the Prequalification Application, Form C-32 or the Prequalification/Certification Renewal Application, Form C-32A, or authorized by letter from the Contractor. If DBE firms are used which have not been previously documented with the Contractor's bid and for which the Contractor now desires to claim credit toward the project goal, the Contractor shall be responsible for submitting necessary documentation in accordance with the procedures stipulated in this Special Provision to cover such work prior to the DBE beginning work.

Form C-63 can be obtained from the VDOT website at: *http://vdotforms.vdot.virginia.gov/*

The Contractor shall submit to the Responsible Engineer its progress schedule with a copy to the DCRO, as required by Section 108.03 of the Specifications or other such specific contract scheduling specification that may include contractual milestones, i.e., monthly or VDOT requested updates. The Contractor shall include a narrative of applicable DBE activities relative to work activities of the Contractor's progress schedule, including the approximate start times and durations of all DBE participation to be claimed for credit that shall result in full achievement of the DBE goal required in the contract.

On contracts awarded on the basis of good faith efforts, narratives or other agreeable format of schedule information requirements and subsequent progress determination shall be based on the commitment information shown on the latest Form C-111 as compared with the appropriate Form C-63.

Prior to beginning any major component or quarter of the work, as applicable, in which DBE work is to be performed, the Contractor shall furnish a revised Form C-111 showing the name(s) and certification number(s) of any current DBEs not previously submitted who will

perform the work during that major component or quarter for which the Contractor seeks to claim credit toward the contract DBE goal. The Contractor shall obtain the prior approval of the Department for any assistance it may provide to the DBE beyond its existing resources in executing its commitment to the work in accordance with the requirements listed in the **Good Faith Efforts Described** section of this Special Provision. If the Contractor is aware of any assistance beyond a DBE's existing resources that the Contractor, or another subcontractor, may be contemplating or may deem necessary and that have not been previously approved, the Contractor shall submit a new or revised narrative statement for VDOT's approval prior to assistance being rendered.

If the Contractor fails to comply with correctly completing and submitting any of the required documentation requested by this provision within the specified time frames, the Department will withhold payment of the monthly progress estimate until such time as the required submissions are received VDOT. Where such failures to provide required submittals or documentation are repeated the Department will move to enjoin the Contractor and any prime contractual affiliates, as in the case of a joint venture, from bidding as a prime Contractor, or participating as a subcontractor on VDOT projects until such submissions are received.

K. Documentation Required for Semi-final Payment

On those projects nearing completion, the Contractor must submit Form C-63 marked "Semi-Final" within twenty (20) days after the submission of the last regular monthly progress estimate to the DCRO. The form must include each DBE used on the contract work and the work performed by each DBE. The form shall include the actual dollar amount paid to each DBE for the accepted creditable work on the contract. The form shall be certified under penalty of perjury, or other applicable law, to be accurate and complete. VDOT will use this certification and other information available to determine applicable DBE credit allowed to date by VDOT and the extent to which the DBEs were fully paid for that work. The Contractor shall acknowledge by the act of filing the form that the information is supplied to obtain payment regarding a federal participation contract. A letter of certification, signed by both the prime Contractor and appropriate DBEs, will accompany the form, indicating the amount, including any retainage, if present, that remains to be paid to the DBE(s).

L. Documentation Required for Final Payment

On those projects that are complete, the Contractor shall submit a final Form C-63 marked "Final" to the DCRO, within thirty (30) days of the final estimate. The form must include each DBE used on the contract and the work performed by each DBE. The form shall include the actual dollar amount paid to each DBE for the creditable work on the contract. VDOT will use this form and other information available to determine if the Contractor and DBEs have satisfied the DBE contract goal percentage specified in the contract and the extent to which credit was allowed. The Contractor shall acknowledge by the act of signing and filing the form that the information is supplied to obtain payment regarding a federal participation contract.

M. Prompt Payment Requirements

The Contractor shall make prompt and full payment to the subcontractor(s) of any retainage held by the prime Contractor after the subcontractor's work is satisfactorily completed.

For purposes of this Special Provision, a subcontractor's work is satisfactorily completed when all the tasks called for in the subcontract have been accomplished, documented, and accepted as required by the contract documents by VDOT. When VDOT has made partial acceptance of a portion of the prime contract, the Department will consider the work of any subcontractor covered by that partial acceptance to be satisfactorily completed. Payment will be made in accordance with the requirements of Section 107.01, Section 109.08, and Section 109.09 of the Specifications.

Upon VDOT's payment of the subcontractor's portion of the work as shown on the monthly progress estimate and the receipt of payment by the Contractor for such work, the Contractor shall make compensation in full to the subcontractor for that portion of the work satisfactorily completed and accepted by the Department. For the purposes of this Special Provision, payment of the subcontractor's portion of the work shall mean the Contractor has issued payment in full, less agreed upon retainage, if any, to the subcontractor for that portion of the subcontractor's work that VDOT paid to the Contractor on the monthly progress estimate.

The Contractor shall make payment of the subcontractor's portion of the work within seven (7) days of the receipt of payment from VDOT in accordance with the requirements of Section 107.01, Section 109.08, and Section 109.09 of the Specifications.

If the Contractor fails to make payment for the subcontractor's portion of the work within the time frame specified herein, the subcontractor shall contact the Responsible Engineer and the Contractor's bonding company in writing. The bonding company and VDOT will investigate the cause for non-payment and, barring mitigating circumstances that would make the subcontractor ineligible for payment, ensure payment in accordance with the requirements of Section 107.01, Section 109.08, and Section 109.09 of the Specifications.

By bidding on this contract, and by accepting and executing this contract, the Contractor agrees to assume these contractual obligations, and to bind the Contractor's subcontractors contractually to those prompt payment requirements.

Nothing contained herein shall preclude the Contractor from withholding payment to the subcontractor in accordance with the terms of the subcontract in order to protect the Contractor from loss or cost of damage due to a breach of agreement by the subcontractor.

N. Miscellaneous DBE Program Requirements

Loss of DBE Eligibility: When a DBE firm has been removed from eligibility as a certified DBE firm, the following actions will be taken:

1. When a Bidder/Contractor has made a commitment to use a DBE firm that is not currently certified, thereby making the Contractor ineligible to receive DBE participation credit for work performed, and a subcontract has not been executed, the ineligible DBE firm does not count toward either the contract goal or overall goal. The Contractor shall meet the contract goal with a DBE firm that is eligible to receive DBE credit for work performed, or must demonstrate to the Contract Engineer that it has made good faith efforts to do so.

2. When a Bidder/Contractor has executed a subcontract with a certified DBE firm prior to official notification of the DBE firm's loss of eligibility, the Contractor may continue to use the firm on the contract and shall continue to receive DBE credit toward its DBE goal for the subcontractor's work.

3. When VDOT has executed a prime contract with a DBE firm that is certified at the time of contract execution but that is later ruled ineligible, the portion of the ineligible firm's performance on the contract before VDOT has issued the notice of its ineligibility shall count toward the contract goal.

Termination of DBE: If a certified DBE subcontractor is terminated, or fails, refuses, or is unable to complete the work on the contract for any reason, the Contractor must promptly request approval to substitute or replace that firm in accordance with this section of this Special Provision.

The Contractor, as aforementioned in **DBE Program-Related Certifications Made by Bidders/Contractors**, shall notify VDOT in writing before terminating and/or replacing the DBE that was committed as a condition of contract award or that is otherwise being used or represented to fulfill DBE contract obligations during the contract performance period. Written consent from the Department for terminating the performance of any DBE shall be granted only when the Contractor can demonstrate that the DBE is unable, unwilling, or ineligible to perform its obligations for which the Contractor sought credit toward the contract DBE goal. Such written consent by the Department to terminate any DBE shall concurrently constitute written consent to substitute or replace the terminated DBE with another DBE. Consent to terminate a DBE shall not be based on the Contractor's ability to negotiate a more advantageous contract with another subcontractor whether that subcontractor is, or is not, a certified DBE.

1. All Contractor requests to terminate, substitute, or replace a certified DBE shall be in writing, and shall include the following information:

   (a) The date the Contractor determined the DBE to be unwilling, unable, or ineligible to perform.

   (b) The projected date that the Contractor shall require a substitution or replacement DBE to commence work if consent is granted to the request.

   (c) A brief statement of facts describing and citing specific actions or inaction by the DBE giving rise to the Contractor's assertion that the DBE is unwilling, unable, or ineligible to perform;

   (d) A brief statement of the affected DBE's capacity and ability to perform the work as determined by the Contractor;

   (e) A brief statement of facts regarding actions taken by the Contractor which are believed to constitute good faith efforts toward enabling the DBE to perform;

   (f) The current percentage of work completed on each bid item by the DBE;

   (g) The total dollar amount currently paid per bid item for work performed by the DBE;

   (h) The total dollar amount per bid item remaining to be paid to the DBE for work completed, but for which the DBE has not received payment, and with which the Contractor has no dispute;

   (i) The total dollar amount per bid item remaining to be paid to the DBE for work completed, but for which the DBE has not received payment, and over which the Contractor and/or the DBE have a dispute.

2. Contractor's Written Notice to DBE of Pending Request to Terminate and Substitute with another DBE.

   The Contractor shall send a copy of the "request to terminate and substitute" letter to the affected committed DBE firm, in conjunction with submitting the request to the DCRO. The affected DBE firm may submit a response letter to the Department within two (2) business days of receiving the notice to terminate from the Contractor. The affected DBE firm shall explain its position concerning performance on the committed work. The Department will consider both the Contractor's request and the DBE's response and explanation before approving the Contractor's termination and substitution request, or determining if any action should be taken against the Contractor.

If, after making its best efforts to deliver a copy of the "request to terminate and substitute" letter, the Contractor is unsuccessful in notifying the affected DBE firm, the Department will verify that the affected, committed DBE firm is unable or unwilling to continue the contract. The Department will immediately approve the Contractor's request for a substitution.

3. Proposed Substitution of Another Certified DBE

   Upon termination of a DBE, the Contractor shall use reasonable good faith efforts to replace the terminated DBE. The termination of such DBE shall not relieve the Contractor of its obligations pursuant to this section, and the unpaid portion of the terminated DBE's contract will not be counted toward the contract goal.

   When a DBE substitution is necessary, the Contractor shall submit an amended Form C-111 with the name of another DBE firm, the proposed work to be performed by that firm, and the dollar amount of the work to replace the unfulfilled portion of the work of the originally committed DBE firm. The Contractor shall furnish all pertinent information including the contract I.D. number, project number, bid item, item description, bid unit and bid quantity, unit price, and total price. In addition, the Contractor shall submit documentation for the requested substitute DBE as described in this section of this Special Provision.

   Should the Contractor be unable to commit the remaining required dollar value to the substitute DBE, the Contractor shall provide written evidence of good faith efforts made to obtain the substitute value requirement. The Department will review the quality, thoroughness, and intensity of those efforts. Efforts that are viewed by VDOT as merely superficial or pro-forma will not be considered good faith efforts to meet the contract goal for DBE participation. The Contractor must document the steps taken that demonstrated its good faith efforts to obtain participation as set forth in the **Good Faith Efforts Described** section of this Special Provision.

Factors Used to determine if a DBE Trucking Firm is performing a CUF:

The following factors will be used to determine whether a DBE trucking company is performing a CUF:

1. To perform a CUF the DBE trucking firm shall be completely responsible for the management and supervision of the entire trucking operation for which the DBE is responsible by subcontract on a particular contract. There shall not be a contrived arrangement, including, but not limited to, any arrangement that would not customarily and legally exist under regular construction project subcontracting practices for the purpose of meeting the DBE contract goal;

2. The DBE must own and operate at least one fully licensed, insured, and operational truck used in the performance of the contract work. This does not include a supervisor's pickup truck or a similar vehicle that is not suitable for and customarily used in hauling the necessary materials or supplies;

3. The DBE receives full contract goal credit for the total reasonable amount the DBE is paid for the transportation services provided on the contract using trucks the DBE owns, insures, and operates using drivers that the DBE employs and manages;

4. The DBE may lease trucks from another certified DBE firm, including from an owner-operator who is certified as a DBE. The DBE firm that leases trucks from another DBE will receive credit for the total fair market value actually paid for transportation services the lessee DBE firm provides on the contract;

5. The DBE may also lease trucks from a non-DBE firm, including an owner-operator. The DBE who leases trucks from a non-DBE is entitled to credit for the total value of the transportation services provided by non-DBE lessees, *not to exceed the value of transportation services provided by DBE-owned trucks on the contract.* For additional participation by non-DBE lessees, the DBE will only receive credit for the fee or commission it receives as a result of the lease arrangement.

EXAMPLE

DBE Firm X uses two (2) of its own trucks on a contract. The firm leases two (2) trucks from DBE Firm Y and six (6) trucks from non-DBE Firm Z.

		Value of Trans. Serv. (For Illustrative Purposes Only**)**
Firm X		
Truck 1	Owned by DBE	$100 per day
Truck 2	Owned by DBE	$100 per day
Firm Y		
Truck 1	Leased from DBE	$110 per day
Truck 2	Leased from DBE	$110 per day
Firm Z		
Truck 1	Leased from Non DBE	$125 per day
Truck 2	Leased from Non DBE	$125 per day
Truck 3	Leased from Non DBE	$125 per day
Truck 4	Leased from Non DBE	$125 per day
Truck 5	Leased from Non DBE*	$125 per day
Truck 6	Leased from Non DBE*	$125 per day

DBE credit would be awarded for the total transportation services provided by DBE Firm X and DBE Firm Y, and may also be awarded for the total value of transportation services by four (4) of the six (6) trucks provided by non-DBE Firm Z (not to exceed the value of transportation services provided by DBE-owned trucks).

Credit = 8 Trucks
Total Value of Transportation Services = $820

In all, full DBE credit would be allowed for the participation of eight (8) trucks (twice the number of DBE trucks owned and leased) and the dollar value attributable to the Value of Transportation Services provided by the 8 trucks.

* With respect to the other two trucks provided by non-DBE Firm Z, DBE credit could be awarded only for the fees or commissions pertaining to those trucks that DBE Firm X receives as a result of the lease with non-DBE Firm Z.

6. For purposes of this section, the lease must indicate that the DBE firm leasing the truck has exclusive use of and control over the truck. This will not preclude the leased truck from working for others during the term of the lease with the consent of the DBE, provided the lease gives the DBE absolute priority for and control over the use of the leased truck.

Leased trucks must display the name and identification number of the DBE firm that has leased the truck at all times during the life of the lease.

Data Collection: In accordance with 49CFR Section 26.11, all firms bidding on prime contracts and bidding or quoting subcontracts on federal-aid projects shall provide the following information to the Contract Engineer annually.

- Firm name
- Firm address
- Firm's status as a DBE or non-DBE
- The age of the firm and
- The annual gross receipts of the firm

The means of transmittal and the risk for timely receipt of this information shall be the responsibility of the bidder. However, the above information can be submitted by means of the Annual Gross Receipts Survey as required in the Prequalification/Certification application.

All bidders, including DBE prime Contractor bidders, shall complete and submit to the Contract Engineer the Subcontractor/Supplier Solicitation and Utilization Form C-48 for each bid submitted; to be received within ten (10) business days after the bid opening. Failure of bidders to submit this form in the time frame specified may be cause for disqualification of the bidder and rejection of their bid in accordance with the requirements of this Special Provision, the contract specifications, and VDOT Road and Bridge specifications.

O. Suspect Evidence of Criminal Behavior

Failure of a bidder, Contractor, or subcontractor to comply with the Virginia Department of Transportation Road and Bridge Specifications and these Special Provisions wherein there appears to be evidence of criminal conduct shall be referred to the Attorney General for the Commonwealth of Virginia and/or the FHWA Inspector General for criminal investigation and, if warranted, prosecution.

Suspected DBE Fraud

In appropriate cases, VDOT will bring to the attention of the U. S. Department of Transportation (USDOT) any appearance of false, fraudulent, or dishonest conduct in connection with the DBE program, so that USDOT can take the steps, e.g., referral to the Department of Justice for criminal prosecution, referral to the USDOT Inspector General, action under suspension and debarment or Program Fraud and Civil Penalties rules provided in 49CFR Part 31.

P. Summary of Remedies for Non-Compliance with DBE Program Requirements

Failure of any bidder\Contractor to comply with the requirements of this Special Provision for Section 107.15 of the Virginia Road and Bridge Specifications, which is deemed to be a condition of bidding, or where a contract exists, is deemed to constitute a breach of contract shall be remedied in accordance with the following:

1. Disadvantaged Business Enterprise (DBE) Program Requirements

The Contractor shall carry out applicable requirements of 49 CFR Part 26 in the award, administration, and performance of this contract. Failure by the Contractor to carry out these requirements is a material breach of this contract, which will result in the termination of this contract or other such remedy, as VDOT deems appropriate.

All administrative remedies noted in this provision are automatic unless the Contractor exercises the right of appeal within the required timeframe(s) specified herein.

2. DBE Program-Related Certifications Made by Bidders\Contractors

Once awarded the contract, the Contractor shall comply fully with all regulatory and contractual requirements of the USDOT DBE Program, and that each certified DBE firm participating in the contract shall fully perform the designated work items with the DBE's own forces and equipment under the DBE's direct supervision, control, and management. Where a contract exists and where the Contractor, DBE firm, or any other firm retained by the Contractor has failed to comply with federal or VDOT DBE Program regulations and/or their requirements on that contract, VDOT has the authority and discretion to determine the extent to which the DBE contract requirements have not been met, and will assess against the Contractor any remedies available at law or provided in the contract in the event of such a contract breach.

3. Disqualification of Bidder

Bidders may be disqualified from bidding for failure to comply with the requirements of this Special Provision, the contract specifications, and VDOT Road and Bridge Specifications.

4. Bidding Procedures

The failure of a bidder to submit the required documentation within the timeframes specified in the **Contract Goal, Good Faith Efforts Specified** section of this Special Provision may be cause for rejection of that bidder's bid. If the lowest bidder is rejected for failure to submit required documentation in the specified time frames, the Department may either award the work to the next lowest bidder, or re-advertise and construct the work under contract or otherwise as determined by the Commonwealth.

In order to award a contract to a bidder that has failed to meet DBE contract goal requirements, VDOT will determine if the bidder's efforts were adequate good faith efforts, and if given all relevant circumstances, those efforts were to the extent a bidder actively and aggressively seeking to meet the requirements would make. Regardless of the DBE contract goal participation level proposed by the bidder or the extent of good faith efforts shown, all bidders shall timely and separately file their completed and executed Forms C-111, C-112, C-48, and Form C-49, as aforementioned, or face potential bid rejection. If a bidder does not submit it's completed and executed C-111, or C-112, when required by this Special Provision, the bidder's bid will be considered non-responsive and may be rejected. If, after reconsideration, the Department determines the bidder has failed to meet the requirements of the contract goal and has failed to make adequate good faith efforts to achieve the level of DBE participation as specified in the bid proposal, the bidder's bid will be rejected. If sufficient documented evidence is presented to demonstrate that the apparent low bidder made reasonable good faith efforts, the Department will award the contract and reduce the DBE requirement to the actual commitment identified by the lowest successful bidder at the time of its bid. The Contractor is encouraged to seek additional participation during the life of the contract.

If the Contractor fails to conform to the schedule of DBE participation as shown on the progress schedule, or at any point at which it is clearly evident that the remaining dollar value of allowable credit for performing work is insufficient to obtain the scheduled participation, the Contractor and any aforementioned affiliates may be enjoined from bidding for 60 days or until such time as conformance with the schedule of DBE

participation is achieved. In such instances, the Contractor is expected to seek DBE participation towards meeting the goal during the prosecution of the contract.

If the Contractor fails upon completion of the project to meet the required participation, the Contractor and any prime contractual affiliates, as in the case of a joint venture, may be enjoined from bidding as a prime Contractor, or participating as a subcontractor on VDOT projects for a period of 90 days.

Prior to enjoinment from bidding or denial to participate as a subcontractor for failure to comply with participation requirements, as provided hereinbefore, the Contractor may submit documentation to the State Construction Engineer to substantiate that failure was due solely to quantitative underrun(s) or elimination of items subcontracted to DBEs, and that all feasible means have been used to obtain the required participation. The State Construction Engineer upon verification of such documentation shall make a determination whether or not the Contractor has met the requirements of the contract.

If it is determined that the aforementioned documentation is insufficient or the failure to meet required participation is due to other reasons, the Contractor may request an appearance before the Administrative Reconsideration Panel to establish that all feasible means were used to meet such participation requirements. The decision of the Administrative Reconsideration Panel shall be administratively final. The enjoinment period will begin upon the Contractor's failure to request a hearing within the designated time frame or upon the Administrative Reconsideration Panel's decision to enjoin, as applicable.

5. Verification of DBE Participation and Imposed Damages

If the Contractor fails to comply with correctly completing and submitting any of the required documentation requested by this provision within the specified time frames, the Department will withhold payment of the monthly progress estimate until such time as the required submissions are received by VDOT. Where such failures to provide required submittals or documentation are repeated the Department will move to enjoin the Contractor and any prime contractual affiliates, as in the case of a joint venture, from bidding as a prime Contractor, or participating as a subcontractor on VDOT projects until such submissions are received.

In addition to the remedies described heretofore in this provision VDOT also exercises its rights with respect to the following remedies:

Suspect Evidence of Criminal Behavior

Failure of a bidder, Contractor, or subcontractor to comply with the Virginia Department of Transportation Road and Bridge Specifications and these Special Provisions wherein there appears to be evidence of criminal conduct shall be referred to the Attorney General for the Commonwealth of Virginia and/or the FHWA Inspector General for criminal investigation and, if warranted prosecution.

In appropriate cases, VDOT will bring to the attention of the U. S. Department of Transportation (USDOT) any appearance of false, fraudulent, or dishonest conduct in connection with the DBE program, so that USDOT can take the steps, e.g., referral to the Department of Justice for criminal prosecution, referral to the USDOT Inspector General, action under suspension and debarment or Program Fraud and Civil Penalties rules provided in 49CFR Part 31.

VIRGINIA DEPARTMENT OF TRANSPORTATION
SPECIAL PROVISION FOR
CPM PROGRESS SCHEDULE FOR CATEGORY III PROJECTS

March 1, 2011

Section 103.06(e) Progress Schedule of the Specifications is deleted and replaced by this provision.

Section 108.03 Progress Schedule of the Specifications is deleted and replaced by this provision.

For definitions of scheduling terms not defined herein, and guidelines on preparing and maintaining the Progress Schedule, refer to the *VDOT Post-Award Scheduling Guide*.

I. GENERAL REQUIREMENTS

This work shall consist of generating and maintaining a project Progress Schedule to aid the Contractor and the Department in planning and executing the Work. The Progress Schedule shall be used by the Contractor, the Department, and all involved parties to plan and schedule all work required to complete the project. The Progress Schedule shall also be used by the Department to monitor progress of the individual activities required to complete the project; as well as to assess the overall progress of the Work and to evaluate the effects of time-related changes on the project. The Progress Schedule shall consist of a Critical Path Method (CPM) Progress Schedule, Progress Schedule Narrative, and Progress Earnings Schedule submitted in accordance with the requirements of this provision.

The Contractor shall prepare and submit, for the Engineer's review and acceptance, a Progress Schedule to communicate the Contractor's intentions and proposed plan to accomplish the Work in accordance with the requirements of the Contract. The Progress Schedule shall depict the sequence in which the Contractor proposes to perform the Work and the dates on which the Contractor contemplates starting and completing all schedule activities required to complete the project. The Contractor shall maintain the Progress Schedule, at a minimum, monthly to ensure that it continues to represent the current status of the project and the Contractor's current work plan to complete the project.

The Contractor shall attend a Scheduling Conference with the Engineer no later than seven (7) calendar days prior to beginning the Work, with the exception of project start-up activities such as submittals, mobilization, surveying, construction access and signage, erosion and sedimentation controls, etc., as approved by the Engineer. The Scheduling Conference will be held to discuss the Contractor's overall plan to complete the Work and the detail work plan for the first ninety (90) calendar days of Work. The Scheduling Conference may be held in conjunction with the Pre-Construction Conference or at a separate meeting as mutually agreed to by the Contractor and the Engineer. The Contractor shall discuss his/her overall plan of operations concerning the Maintenance of Traffic (MOT)/Sequence of Construction or any proposed deviations from the phasing, staging, or sequence of construction as indicated on the Contract plans or as approved by the Engineer. During the Scheduling Conference key issues and project specific requirements necessary for the development of the Baseline Progress Schedule shall also be discussed. Such key issues shall include as applicable, but are not limited to key submittals, permits, construction access, right of way, environmental, utility, traffic or local events indentified in the Contract Documents that may impact traffic; as well as other limitations to the Work or any known constraints or foreseeable issues that may impact the schedule. Such project specific requirements shall include as applicable, but are not limited to scheduling, phasing, sequencing, milestone(s), work to

be performed by the Department or other previously identified involved parties; or any known or likely constructability issues relative to the Contract plans and specifications.

II. OVERVIEW OF THE VARIOUS REQUIRED PROGRESS SCHEDULE SUBMISSIONS

A. Preliminary Progress Schedule – At least two (2) business days prior to the Scheduling Conference, or as approved by the Engineer, the Contractor shall submit to the Engineer for review and acceptance a Preliminary Progress Schedule. At the Contractor's discretion, a complete detailed Baseline Progress Schedule for the entire project may be submitted in lieu of the Preliminary Progress Schedule. The Preliminary Progress Schedule submission shall consist of the following:

1. Preliminary Progress Schedule: The Preliminary Progress Schedule shall depict, at a detailed level, the Contractor's proposed sequence and start/finish dates for all activities scheduled for the first ninety (90) calendar days of work. It shall also include, as applicable, any milestones or work to be performed by sub-contractors, the Department, or third parties during the first ninety (90) calendar days of work. The Preliminary Progress Schedule shall also depict at a summary level the proposed overall sequence and timing of the remaining Work. The Preliminary Progress Schedule shall be prepared in accordance with Section IV (A), with the exception of cost-loading.

2. Preliminary Progress Schedule Narrative: The Preliminary Progress Schedule Narrative shall describe the Contractor's detailed work plan for the first ninety (90) calendar days of work. The Preliminary Progress Schedule Narrative shall be prepared in accordance with Section IV (B).

Until the Baseline Progress Schedule is accepted by the Engineer, the Contractor shall submit an update of the Preliminary Progress Schedule monthly, within five (5) working days after the current data date or as approved by the Engineer. The updated Preliminary Progress Schedule shall show the actual progress of work completed to date and the current detailed schedule for accomplishing the work planned for the following ninety (90) calendar days of Work, as of the data date. It shall also show the summary level activities required to complete the remainder of the Work.

B. Baseline Progress Schedule – Within thirty (30) calendar days after the Notice to Proceed (NTP) date or as approved by the Engineer, the Contractor shall submit in its entirety, his/her Baseline Progress Schedule, to the Engineer for review and acceptance. The Baseline Progress Schedule submittal shall consist of the following:

1. Baseline Progress Schedule: The Baseline Progress Schedule shall represent the Contractor's initial detailed plan to accomplish the entire scope of Work in accordance with the Contract. The Baseline Progress Schedule shall be prepared based on the Critical Path Method (CPM) and shall depict in a time-scaled bar-chart plot, the sequence in which the Contractor proposes to perform the Work, the project critical path, and the dates on which the Contractor contemplates starting and completing the individual schedule activities required to complete the project. The Baseline Progress Schedule shall also depict the current status of the project and the Contractor's current plan to complete the remaining work, as of the Baseline Progress Schedule submittal date.

   The Baseline Progress Schedule shall reflect a practicable work plan and logical progress of the Work as indicated in the Contract Documents or as approved by the Engineer. When preparing the schedule, the Contractor shall consider as applicable, all known or specified constraints or restrictions such as: holidays,

seasonal, normal weather, traffic or previously identified local events that may impact traffic, utility, railroad, right-of-way, environmental, permits, or other limitations to the Work that will impact the schedule. The Baseline Progress Schedule shall be prepared in accordance with Section IV (A).

2. Baseline Progress Schedule Narrative: The Baseline Progress Schedule Narrative shall describe the Contractor's proposed overall work plan to complete the entire project as reflected on the Baseline Progress Schedule. The Baseline Progress Schedule Narrative shall be prepared in accordance with Section IV (B).

3. Baseline Progress Earnings Schedule: The Baseline Progress Earnings Schedule shall indicate the Contractor's anticipated cumulative progress each month as of the Contractor's progress estimate date as defined in Section 109.08(a) of the Specifications. The anticipated cumulative progress shall be expressed as "Percent Complete" based on the anticipated total earnings to date relative to the Total Contract Value. The Baseline Progress Earnings Schedule shall reflect the anticipated progress of the Work as shown on the Baseline Progress Schedule and shall be prepared on the VDOT Form C-13C in accordance with the VDOT Post-Award Scheduling Guide. At the Contractor's discretion, the Progress Schedule may be cost-loaded, in which case, the Progress Earnings Schedule shall then be prepared and submitted using the VDOT Form C-13CPM.

The Baseline Progress Schedule will be reviewed by the Engineer for acceptance in accordance with Section VII. Upon acceptance by the Engineer, the Baseline Progress Schedule shall replace the Preliminary Progress Schedule. The accepted Baseline Progress Schedule shall henceforth become the project Schedule of Record (SOR). The SOR shall be defined as the currently accepted Baseline Progress Schedule. Until a subsequent Revised Progress Schedule is submitted and accepted, the accepted Baseline Progress Schedule shall remain the SOR against which all subsequent Progress Schedule Updates and progress will be compared. The SOR shall be used by the Engineer to assess the Contractor's schedule-based performance on the project.

C. Progress Schedule Update – The Contractor shall on a monthly basis submit for the Engineer's review and acceptance the Contractor's Progress Schedule Update within five (5) business days after the Contractor's progress estimate date or as approved by the Engineer. The Progress Schedule Update shall consist of the following:

1. Progress Schedule Update: The Progress Schedule Update shall depict the current status of the Work and the Contractor's current plan to complete the remaining work as of the data date. The Progress Schedule Update shall be prepared in accordance with Section IV (A).

2. Progress Schedule Update Narrative: The Progress Schedule Update Narrative shall describe the work performed since the previous update and the Contractor's current plan for accomplishing the remaining work. It shall also describe any progress deficiencies, schedule slippages, or time-related issues encountered; as well as any actions taken or proposed to avoid or mitigate the effects of the progress deficiencies, schedule slippages, or time-related issues. The Progress Schedule Update Narrative shall be prepared in accordance with Section IV (B).

3. Progress Earnings Schedule Update: The Progress Earnings Schedule Update shall depict the current status of the project by percent complete based on the actual total earnings to date relative to the Total Contract Value. The Progress Earnings Schedule Update shall show the actual monthly and cumulative earnings to date as reflected on the Contractor's payment estimate, any variance in percent complete relative to the SOR, and the projected earnings for the remaining

payment periods. The Progress Earnings Schedule Update shall be prepared on the VDOT Form C-13C or as specified herein and in accordance with the VDOT Post-Award Scheduling Guide.

The Progress Schedule Update will be reviewed by the Engineer for acceptance in accordance with Section VII. Upon acceptance by the Engineer, the Progress Schedule Update shall replace any previous Progress Schedule Updates as the current update of the SOR; however, it shall not replace the SOR. The currently accepted Progress Schedule Update shall henceforth become the contemporaneous schedule with which to report the current status of the project, plan the remaining Work, and evaluate the effects of any time-related changes or delays on the remaining Work.

D. **Revised Progress Schedule –** When the current Progress Schedule or work plan deviates significantly from the SOR, the Contractor shall submit to the Engineer for review and acceptance a Revised Progress Schedule to represent the Contractor's revised plan to complete the remaining work. Deviate significantly will be construed to mean deviations from the SOR resulting from schedule impacts or major changes in the Progress Schedule that alter the project critical path, Contract interim milestone(s), or project completion; or causes a major shift in the Progress Earnings Schedule. A Revised Progress Schedule will be required when:

1. The Engineer approves a Schedule Impact Analysis (SIA) for authorized or unanticipated changes in the Work or conditions that significantly impacts the Progress Schedule, as determined by the Engineer.

2. The Contractor proposes a different approach to his/her work plan that significantly impacts the Progress Schedule or the Engineer determines that the current Progress Schedule Update or Contractor's current work plan deviates significantly from the SOR. Such deviations may include, but are not limited to major changes in the Contractor's proposed phasing, general sequence, resource plan, means and methods, or durations. The Contractor may revise his/her Progress Schedule at any time, at his/her discretion; however, the Engineer will only consider accepting a Revised Progress Schedule submission for major changes that deviate significantly from the SOR.

3. The Engineer determines that progress of the Work is trending towards unsatisfactory, in accordance with Section VIII (C), and in the opinion of the Engineer, it is apparent that the progress deficiency will not result in an extension of the completion date of the project beyond the Contract time limit and a Recovery Plan is not required to correct the progress deficiency. In such cases, the Engineer will request a meeting with the Contractor to discuss the progress deficiency to determine the appropriate corrective action required.

The Revised Progress Schedule submission shall be based on the currently accepted Progress Schedule Update and shall be prepared and submitted in the form of a Baseline Progress Schedule as described in Section II (B). However, it shall reflect the current status of the project as of the submittal date, approved changes in the Work, and the proposed plan for completing the remaining work. The Revised Progress Schedule shall be submitted in lieu of a subsequent Progress Schedule Update unless directed otherwise by the Engineer. The Revised Progress Schedule will be reviewed by the Engineer for acceptance in accordance with Section VII. Upon acceptance by the Engineer, the Revised Progress Schedule shall henceforth replace the accepted Baseline Progress Schedule or any previously accepted Revised Progress Schedule as the SOR for the remainder of the project.

E. Final As-Built Progress Schedule – Within thirty (30) calendar days after final acceptance, the Contractor shall submit to the Engineer his/her Final As-built Progress Schedule. The Final As-built Progress Schedule shall show the actual start and finish dates for each activity in the schedule. The Contractor shall certify in writing that the Final As-built Progress Schedule accurately reflects the actual start and finish dates for all activities contained in the Progress Schedule. The Final As-built Progress Schedule shall be submitted in the form of a monthly Progress Schedule Update and shall represent the last Progress Schedule Update submission.

III. SCHEDULE IMPACT ANALYSIS (SIA) FOR CHANGES AND DELAYS

A. Changes, Delays, and Schedule Impacts – When changes in the Work that will impact the schedule are proposed or authorized by the Engineer, the Contractor shall submit for the Engineer's review and approval, a Schedule Impact Analysis (SIA) to determine the impact of the change. Also, when the Contractor believes he is entitled to a time extension and/or additional compensation for a time-related impact that is attributable to a cause beyond the control of and without the fault, negligence, or responsibility of the Contractor or those for whom the Contractor is responsible, the Contractor shall submit for the Engineer's review and approval, a SIA and all available supporting data to substantiate the request for modification of the Contract. The Contractor's request and SIA shall be submitted in accordance with the following:

1. Impacts Due to Directed or Authorized Changes: When the Engineer issues a written order or authorizes a change in the Work in writing, the Contractor shall submit in writing within seven (7) calendar days of the Engineer's written direction or as required by the Engineer, a request for modification of the Contract, if the Contractor believes that additional time and/or compensation is required to perform the Work. Such changes in the Work may include, but are not limited to directed or authorized changes in accordance with the applicable portions of Sections 104.02, 108.05, and 109.05 of the Specifications. The Contractor shall submit along with his/her request a *prospective* Schedule Impact Analysis (SIA) to substantiate the request for modification of the Contract in accordance with this provision and the applicable portions of Sections 104.02, 108.05, and 109.05 of the Specifications.

2. Impacts Due to Unanticipated Changes or Delays: When the Contractor discovers or encounters previously unknown or unanticipated changes in the Work or conditions, or a delay event that he believes will impact progress of the Work or completion of the project, the Contractor shall notify the Engineer in writing within two (2) working days of such discovery or encounter. Such changes in the Work or conditions or delay events may include, but are not limited to unusually severe weather, extraordinary or catastrophic weather events, errors or omissions in the Contract Documents; or differing site conditions or utility delays in accordance with the applicable portions of Sections 104.03 and 105.08 of the Specifications.

   The Contractor shall then gather all available pertinent information and data necessary to determine how such change in the Work or condition will impact progress of the Work or completion of the project. The Contractor and the Department shall promptly meet to evaluate the scope and potential impact of such change or condition to allow the Engineer to make a timely decision on how to proceed, as well as to determine how the impact of such change or condition can be avoided or mitigated.

   The Engineer may direct the Contractor to submit a SIA prior to proceeding with the work affected by such change, condition, or delay, in which case the Contractor

shall submit in writing within seven (7) calendar days after receipt of the Engineer's direction, a request for modification of the Contract and a *prospective* SIA to substantiate the request for modification of the Contract.

Otherwise, the Contractor shall submit in writing a request for modification of the Contract and a *contemporaneous* SIA to substantiate the request for modification of the Contract. The request for modification of the Contract and SIA shall be submitted within fourteen (14) calendar days of completion of the changed work or work directly impacted by such condition, or the cessation date of the delay event, or as approved by the Engineer.

3. Unresolved Impacts: When the Contractor believes he is entitled to a time extension and/or additional compensation for an unresolved impact to the Work that is attributable to a cause beyond the control of and without the fault, negligence, or responsibility of the Contractor or those for whom the Contractor is responsible, the Contractor shall submit for the Engineer's review and approval, a request for modification of the Contract and a *retrospective* SIA to substantiate the request for modification of the Contract. Such impacts may involve, but are not limited to changes authorized by either Force Account Work or Unilateral Work Order, or other changes for which the scope of the change or magnitude of the impact could not be determined or mutually agreed to at the time the change was authorized or the delay event or changed condition was encountered.

The Contractor's notice of a change, a subsequent meeting with the Engineer, or submittal of a request for modification of the Contract as defined herein, shall not constitute a notice of intent to file a claim as required by Section 105.19. *No part of this provision is intended to alter, replace, or supersede Section 105.19 of the Specifications. The Contractor must adhere to Section 105.19 as well as this provision to preserve their rights to file a claim.*

B. Schedule Impact Analysis (SIA) – The SIA submission shall include a SIA schedule and a written SIA statement as well as supporting data and such information necessary for the Department to make an adequate and timely evaluation of any time-related request received from the Contractor for modification of the Contract. The SIA submission shall consist of the following:

1. A SIA schedule, as specified herein, which shall depict the schedule impact of the change in the Work or condition or delay event based on the currently accepted Progress Schedule Update, submitted prior to the earlier of the date the change in the Work was authorized or the changed condition or delay event was encountered. If the most recently submitted Progress Schedule Update is unacceptable, then the Engineer will evaluate the request based on the previously accepted Progress Schedule Update. In which case, the Contractor shall update the previously accepted Progress Schedule Update to show the actual progress of the Work to date as of the earlier of the date the change in the Work was authorized or the changed condition or delay event was encountered. The SIA schedule shall:

   a) Be based on the "Time Impact Analysis (TIA)" or "Contemporaneous Schedule Analysis" method as determined by the Engineer, to determine the status of the currently accepted Progress Schedule Update before and after the change in the Work or condition or delay event.

   b) Show a fragnet (fragmentary network of added or changed activities) representing the added work, changed work or condition, or delay event(s). The fragnet activities shall be logically linked to the affected activities to show the direct impact on the work.

c) Show the current status of the completed and on-going activities as of the date the change in the Work was authorized or the changed condition was encountered or the delay event started.

d) Depict the schedule impact by showing a comparison between the impacted Progress Schedule Update and the most recently accepted Progress Schedule Update with a data date closest to and prior to the earlier of the date the change in the Work was authorized or the changed condition or delay event was encountered.

e) Depict the overall impact on the project critical path, Contract interim milestone(s), other significant dates, and the Contract fixed completion date, as applicable.

2. A written SIA statement to:

a) Describe the type, cause, and scope of the added work, changed work or condition, or delay event.

b) Provide sequence and timing of events and/or actions by all involved parties relating to the change or delay.

c) Describe the particular operations affected as well as identify by Activity ID and Activity Name the activities that are directly impacted.

d) Describe the impact on the critical path, total float, Contract interim milestone(s), other significant dates, or the Contract fixed completion date, as applicable.

e) Include a comparative analysis report relative to the currently accepted Progress Schedule Update to identify all changes made to the impacted Progress Schedule.

f) Identify any actions taken and/or needed to avoid or mitigate the delay or the effects of the delay.

Approval or rejection of the SIA by Engineer shall be made within ten (10) business days after receipt of the SIA, unless subsequent meetings and negotiations are necessary, as determined by the Engineer. Upon approval by the Engineer, the Contractor shall incorporate the SIA into the Progress Schedule and shall submit the impacted Progress Schedule as a Progress Schedule Update or Revised Progress Schedule as directed by the Engineer. If appropriate, the approved SIA shall be used to substantiate any request for a time extension or time-related damages or additional compensations, in accordance with the applicable portions of Sections 104.02, 104.03, 105.08, 108.04, and 109.05 of the Specifications.

IV. DETAILED REQUIREMENTS FOR PROGRESS SCHEDULE SUBMISSIONS

A. Progress Schedule – The Progress Schedule shall conform to the following requirements:

1. Software Compatibility Requirements: The Contractor shall submit his/her Progress Schedule in the Primavera proprietary exchange format (XER) to ensure compatibility with the Department's scheduling software system. The Department's scheduling software system is the latest version of Primavera's Project Management software (currently P6 version 6.2). Compatible shall mean

that the Contractor-provided electronic file versions of the schedule can be imported into the Department's scheduling software system with no modifications, preparation or adjustments. For projects that are included in a multi-contract mega-project, the Contractor shall prepare and maintain his/her Progress Schedule in the Department's scheduling software system. At the Contractor's request, secured access via the internet may be granted to allow the Contractor to develop and maintain his/her Progress Schedule in the Department's scheduling software system. The Progress Schedule shall be submitted in accordance with Section V.

2. Software Settings: If Primavera (P6) or equivalent scheduling software with similar features is used to prepare the Progress Schedule, the Contractor shall define the project attributes and schedule calculation options in accordance with the software settings detail requirements defined in the VDOT Post-award Scheduling Guide.

3. Work Breakdown Structure (WBS): The Baseline Progress Schedule shall be organized using a multi-level hierarchical Work Breakdown Structure (WBS). The Contractor shall define a project WBS to allow for a hierarchical organization and breakdown of the Work based on the Contractor's approach and in accordance with the phasing/sequence of construction and traffic control plans as specified in the Contract or as approved by the Engineer.

4. Activity Codes: The Contractor shall define and assign as appropriate, activity codes to allow for filtering, grouping, and sorting of activities by Responsibility, Phase, Stage, Feature of Work, Area, Location, Work Type, Crew, and Contract Modification activity codes to facilitate review and use of the Progress Schedule. If Primavera (P6) or equivalent scheduling software with similar features is used to prepare the Progress Schedule, the Contractor shall define activity codes using the project-specific activity codes option. Use of global activity codes shall not be allowed and shall be grounds for rejecting the Progress Schedule submission. Project-specific activity codes shall be defined and assigned in accordance with the detail requirements defined in the VDOT Post-award Scheduling Guide.

5. Calendars: The Contractor shall define and assign as appropriate, project-specific calendar to each activity to indicate when the activity can be performed. If Primavera (P6) or equivalent scheduling software with similar features is used to prepare the Progress Schedule, the Contractor shall define the project calendars using the project-specific option. The project calendars shall indicate, as applicable, the standard working hours per day, standard working days per week, and non-work days such as week-ends, holidays, weather days, local events, environmental, time-of-year restrictions, etc. Use of global calendars shall not be allowed and shall be grounds for rejecting the Progress Schedule submission. The project-specific calendars shall be defined in accordance with the detail requirements defined in the VDOT Post-award Scheduling Guide.

6. Level of Detail: The Contractor shall develop the Progress Schedule to an appropriate level of detail that allows for the formation of a reasonable critical path. The Progress Schedule shall show as applicable, Contract milestones and other key milestones for significant project events. The Progress Schedule shall also show, as applicable, administrative, procurement, MOT, work to be performed by other involved parties, discrete work activities to indicate the type of operation and location of the work, and other necessary time-based tasks required for completion of the project. The Work shall be sub-divided as practical, to such a level that the activity durations for on-site work excluding, activities whose durations are specified elsewhere in the Contract, are twenty (20) workdays or less. Longer durations may be allowed, as approved by the Engineer, for activities that typically

span long periods of time such as fabrication and delivery of materials, administrative, MOT, or other such level of effort activities.

7. Network Logic: The Progress Schedule network logic shall be based on the Precedence Diagram Method (PDM) and shall show the order and inter-dependence of the activities and the sequence in which the Contractor proposes to accomplish the Work. The Contractor shall apply the Critical Path Method (CPM) of network calculation to generate the Progress Schedule. The project critical path shall be based on the "Longest Path". The Progress Schedule network logic shall be developed in accordance with the detail requirements defined in the VDOT Post-award Scheduling Guide.

8. Schedule Constraints: All Contract milestone activities shall be constrained, as applicable, with a "Start On or After" (Early Start) date or "Finish On or Before" (Late Finish) date equal to the "Start No Earlier Than" or "Must Finish By" date specified in the Contract, except as specified below. The Contractor's use of schedule constraints with the exception of the specific requirements defined below is not allowed, unless approved by the Engineer. The use of schedule constraints such as "Start On" or "Finish On" for the purpose of manipulating float or the use of schedule constraints that violate network logic such "Mandatory Start" or "Mandatory Finish" will not be allowed. When a schedule constraint is used, other than the schedule constraints specified herein, the Contractor shall provide explanation for the use of such constraint in the Progress Schedule or Progress Schedule Narrative.

9. Data Date: The data date is defined as the current status date of the Progress Schedule, which defines the start date for the scheduled remaining Work. All Progress Schedule submissions shall be calculated using an appropriate data date to indicate the status of the project at the time the Progress Schedule is submitted.

   a) For the Preliminary, Baseline, or subsequent Revised Progress Schedule submission, the data date shall be no more than five (5) business days prior to the submittal date.

   b) For the monthly Progress Schedule Update submissions the data date shall be the Contractor's monthly progress estimate date as defined in Section 109.08(a) of the Specifications.

10. Total Float: This section is intended to apply only to considerations of Contract time extension requests relative to available total float. Considerations for other time-related impacts, if any, are covered in other Sections of the Specifications. Any request for a Contract time extension will be evaluated, in accordance with Section 108.04, based on the critical path and available total float. Total float is defined as the amount of time, typically expressed in days (number of workdays or calendar days depending on the assigned calendar), that an activity can be delayed without extending the completion date of a related Contract interim milestone or the project, as applicable. Except as specified herein, total float shall be calculated, as applicable, relative to a constrained Contract interim milestone date or the Contract fixed completion date specified in the Contract or a subsequent Work Order.

    With the exception of A+B based Contracts, any float available in the Progress Schedule, at any time, shall be considered project float and is not for the exclusive use or benefit of either the Department or the Contractor. It shall be understood by the Contractor and the Department that float is a shared commodity and either party has the right to full use of any available float. Until such time that all available

float is depleted, the project float shall be used responsibly in the best interest of the project and in a manner that best serves the timely completion of the Work by either a specified Contract interim milestone or the Contract fixed completion date, as applicable.

For A+B based Contracts for which the Contractor bids the Contract time and/or Contract interim milestone(s), any float on a critical activity or activities on the critical path shall belong to the Contractor and any float on non-critical activities or activities not on the critical path shall belong to the project and shall be considered available project float for use by either the Department or the Contractor for the benefit of the project.

The Contractor shall not modify the Progress Schedule at any time for the purpose of manipulating float. Negative float conditions will not be allowed in the Preliminary, Baseline, or Revised Progress Schedule.

11. Progress Schedule Update: The Progress Schedule Update shall reflect the actual status of the Work and the current plan to complete the remaining work as of the current data date. It shall show the actual start/finish dates for each completed activity and the actual start date, remaining duration, and progress (percent complete) of each on-going activity. The Progress Schedule Update shall allow for an accurate determination of progress of completed and on-going work based on total actual cost (earnings) to date; as well as an accurate projection of the anticipated monthly earnings for the remaining work based on remaining cost. The Progress Schedule Update shall be based on the most recently accepted Progress Schedule and shall be prepared in accordance with the detail requirements defined in the VDOT Post-award Scheduling Guide.

B. Progress Schedule Narrative – As specified in Section II of this provision, a Baseline Progress Schedule Narrative shall be submitted with the Baseline Progress Schedule submission and a Progress Schedule Update Narrative shall be submitted with the Progress Schedule Update submission. The Progress Schedule Narrative shall be prepared in accordance with the following:

1. Baseline Progress Schedule Narrative: The Baseline Progress Schedule Narrative shall include the following written information:

   a) The Contractor's overall plan describing:

      i) The proposed overall sequence of construction, including where the work will begin and how the work will progress;
      iIi) The methodology, scheduling assumptions, and general procedures for completing each major feature of Work;
      iii) A list of the major resources (number and type of crews and equipment) required to complete the project as scheduled. For early completion schedules (projects with an early completion interim milestone provision or projects with scheduled completion dates earlier than the Contract specified date by thirty (30) calendar days or more), the Contractor shall also provide a written resource plan for the major operations to demonstrate the Contractor's ability and commitment to provide resources at the level required to complete the work within the timeframes shown in the Progress Schedule;
      iv) Anticipated daily production rates for each major operation.

   b) A description of the project critical path.

c) A listing of the major milestone dates, including as applicable, Contract interim milestone(s), major traffic switches, start/finish milestones for each phase or stage of work, or related work to be performed by the Department or other involved parties.

d) A log identifying the schedule constraints used in the Progress Schedule and reason for using each constraint.

e) A description of the calendar(s) used in the Progress Schedule to indicate the Calendar ID, number of work days per week, number of shifts per day, and number of hours per day as well as the anticipated number of non-working days per month for each calendar with considerations, as applicable, for holidays, normal weather conditions; as well as for seasonal or other known or specified constraints and restrictions (i.e. traffic, local events, environmental, permits, utility, etc.).

f) A description of any known problems or anticipated issues that may impact the schedule; and any actions taken, proposed, or needed to correct the problems.

2. Progress Schedule Update Narrative: The Progress Schedule Update Narrative shall include the following written information:

a) A description of the current status of the project in terms of the current actual percent complete by total earnings relative to the SOR planned percent complete; as well as the scheduled completion dates of the interim milestone(s) and project completion.

b) A description of any deviations from scheduled performance in terms of the scheduled completion dates of the interim milestone(s) and project completion since the previous schedule submission, including a statement explaining why any of the schedule milestone date(s) is forecast to occur after the specified date(s).

c) A description of the work performed since the previous Progress Schedule submission and any deviations from the work scheduled.

d) A description of major changes in the Contractor's work plan in terms of sequence of construction, shifts, manpower, equipment, or materials.

e) A description of any deviations in project critical path since the previous Progress Schedule submission.

f) A listing of adverse weather dates and number of days lost this period due to adverse weather or conditions resulting from adverse weather. List the activities affected and any impacts to the critical path.

g) A description of problems encountered or anticipated since the previous Progress Schedule submission, including an explanation of any corrective actions taken or required to be taken.

h) A description of work planned for the next update period and actions to be taken by the Department or other involved parties.

V. REPORTING AND SUBMITTAL REQUIREMENTS FOR PROGRESS SCHEDULE SUBMISSIONS

Unless directed otherwise by the Engineer, the Contractor shall submit for each Progress Schedule submission the following submittal items. Each electronic file submittal shall have a unique file name prefixed by the Contract ID to identify the Contract, submission type and order of submission, and date of submittal (e.g. C00012345B01_B-1_12-30-10.xer, C00012345B01_U-1_1-10-11.xer, etc.). The Progress Schedule submittals shall include:

1. A transmittal letter to the Engineer, identifying the date of submittal and which Progress Schedule is being submitted for review.

2. Two (2) sets of data compact disks (CD) containing the electronic working export file copy of the Progress Schedule in an "XER" file format in version 6.2 or lower. Each CD shall be labeled to indicate the Contract ID, type of submission, filename, and submittal date.

3. Two (2) sets of paper copies of the following schedule reports:

    a) Schedule calculation log.

    b) A legible time-scaled bar-chart plot of the Progress Schedule organized by WBS and sorted by early start to show for each activity: the Activity ID, Activity Name, Original Duration, Remaining Duration, Start and Finish dates, Activity Percent Complete, and Total Float. The bar-chart plot shall identify the project critical path (longest path).

4. Electronic file copies by email of the following:

    a) A working export file of the Progress Schedule in an "XER" file format in version 6.2 or lower.

    b) Electronic "PDF" copy of the tabular Predecessor/Successor report sorted in ascending order by Activity ID to show the following:

        i) Activity ID;
        ii) Activity Name;
        iIii) Original Duration;
        iv) Remaining Duration;
        v) Early Start;
        vi) Early Finish;
        vii) Late Start;
        viii) Late Finish;
        ix) Total Float;
        x) Critical (Yes or No);
        xi) Predecessors: Activity ID, Activity Name, Early Start, Early Finish, Relationship Type, Lag, Driving (Yes or No), Constraint, and Constraint Date;
        xii) Successors: Activity ID, Activity Name, Early Start, Early Finish, Relationship Type, Lag, Driving (Yes or No), Constraint, and Constraint Date.

    c) Electronic "PDF" copy of the Progress Schedule Narrative.

    d) Electronic "PDF" copy of the Progress Earnings Schedule S-Curve.

e) A working file of the Progress Earnings Schedule (VDOT Form C-13C).

VI. FAILURE TO SUBMIT PROGRESS SCHEDULES

The Engineer will take necessary actions in accordance with the following for failure on the part of the Contractor to submit the required Progress Schedules:

1. If the Contractor fails to submit his/her complete Preliminary Progress Schedule at least two (2) business days prior to the Scheduling Conference, the Contractor shall not commence Work, with the exception of project start-up activities such as submittals, mobilization, surveying, construction access and signage, erosion and sedimentation controls, etc., until after seven (7) calendar days from the date the Contractor submits his/her complete Preliminary Progress Schedule, unless otherwise approved in writing by the Engineer.

2. If the Contractor fails to submit his/her complete Baseline Progress Schedule within thirty (30) calendar days after the NTP date or as approved by the Engineer, the Engineer will delay approval of the Contractor's next monthly progress estimate following the due date of the Baseline Progress Schedule until such time as the Contractor has satisfied the submittal requirements.

3. If the Progress Schedule submission is deemed unacceptable by the Engineer; and the Contractor fails to submit an acceptable Progress Schedule within fourteen (14) calendar days after the Engineer's request, the Engineer will delay approval of the Contractor's next monthly progress estimate following the due date of the Progress Schedule until such time as the Contractor has satisfied the submittal requirements.

4. If the Contractor fails to provide a Progress Schedule Update or if a Revised Progress Schedule is required as specified herein and the Contractor fails to provide such a Progress Schedule, the Engineer will delay approval of the Contractor's next monthly progress estimate following the due date of the Progress Schedule until such time as the Contractor has satisfied the submittal requirements.

5. If the Contractor fails to provide an acceptable Final As-built Progress Schedule as specified, the Engineer will delay approval for payment of the Contractor's final progress estimate until such time as the Contractor has satisfied the submittal requirements.

Please note: Delays resulting from the Contractor's failure to provide the Progress Schedule in accordance with the requirements set forth herein will not be considered just cause for extension of the Contract time limit or for additional compensation.

VII. REVIEW AND ACCEPTANCE

The Engineer will review all Progress Schedule submissions within fourteen (14) calendar days of receipt of the Contractor's complete submittal, unless subsequent review meetings are necessary, as determined by the Engineer. The Engineer's review for acceptance will not commence until all required submittal items and schedule information as defined herein are provided. Acceptance by the Engineer will be based <u>only</u> on <u>completeness</u> and <u>conformance</u> with the requirements of the Contract.

If the Contractor's Progress Schedule submission is deemed to be acceptable, the Engineer will respond with a written notice of acceptance, which may include comments or minor concerns on the submission and/or a request for clarification or justification. When the Engineer's response include any comments, concerns, or request for clarification or justification, the Contractor shall respond accordingly within seven (7) calendar days of receipt of the Engineer's response. The Contractor's response may include a resubmission of the Progress Schedule to address the Engineer's comments or concerns or provide clarification or justification accordingly.

If the Contractor's Progress Schedule submission is deemed to be unacceptable, the Engineer will issue a written notification of non-conformance, which will include a request for resubmission and comments describing the deficiencies prompting the Engineer's decision. At the Engineer's discretion, the Contractor may be required to attend a schedule review meeting to discuss the issues prompting the Engineer's decision or to facilitate review and acceptance of the Progress Schedule submission.

When the Progress Schedule submission is deemed by the Engineer to be unacceptable, the Contractor shall revise and re-submit the Progress Schedule submission accordingly, within seven (7) calendar days of receipt of the Engineer's response.

Review and acceptance by the Engineer will not constitute a waiver of any Contract requirements and will in no way assign responsibilities of the work plan, scheduling assumptions, and validity of the schedule to the Department. Failure of the Contractor to include in the Progress Schedule any element of work required by the Contract for timely completion of the project will not excuse the Contractor from completing the Work within the Contract specified interim milestone(s) or the Contract time limit, as applicable.

VIII. MONITORING THE WORK AND ASSESSING PROGRESS

A. Monitoring The Work – The Engineer will monitor the Work regularly to identify deviations from the Contractor's scheduled performance relative to the SOR. The Contractor shall notify the Engineer at least two (2) working days in advance of any changes in the Contractor's planned operations or critical stage work requiring Department oversight or inspection. The Contractor shall attend a monthly progress schedule meeting with the Engineer on a day agreed to by the Contractor and the Engineer. The Contractor shall furnish his/her detailed 30-day look-ahead schedule at the progress meeting and shall be prepared to discuss the current status of the Work and planned operations for the following thirty (30) calendar days. The 30-day look-ahead schedule shall be based on the Contractor's current monthly Progress Schedule Update.

B. Progress Evaluation – Progress will be evaluated by the Engineer at the time of the monthly progress estimate relative to the SOR. The Contractor's actual progress will be considered unsatisfactory if any one of the following conditions occurs:

1. The actual total earnings to date percentage for work completed, based on the Contractor's progress payment estimate, falls behind the SOR planned cumulative earnings percentage by more than ten (10) percentage points. If the Progress Earnings Schedule is based on a cost-loaded Progress Schedule, then the unsatisfactory progress threshold will be based on falling behind the SOR planned cumulative late dates earnings percentage. Payments for Stored Materials, Materials on Hand, or Adjustments (asphalt, fuel, etc.) shall not be included in the actual progress earnings.

2. The calculated completion date of a Contract interim milestone is later than the specified completion date by more than fourteen (14) calendar days.

3. The calculated project completion date is later than the Contract fixed completion date by more than thirty (30) calendar days.

C. Progress Deficiency and Schedule Slippage – When the Contractor's actual progress is trending toward unsatisfactory status, the Engineer will request a meeting with the Contractor to discuss any actions taken or required by the Contractor to reverse this trend and to correct the progress deficiency or schedule slippage.

When the Contractor's actual progress is deemed unsatisfactory as defined by any one of the conditions listed under **Progress Evaluation** of this provision, the Engineer will issue a written notice of unsatisfactory performance to advise the Contractor that five (5) percent retainage of the monthly progress estimate is being withheld and will continue to be withheld as described in Section 109.08(c), for each month the Contractor's actual progress is determined to be unsatisfactory, unless there is a pending decision by the Engineer on a request for modification of the Contract for which the Contractor has previously provided documentation as required.

When the Contractor fails to respond with good faith efforts as described herein to restore satisfactory progress, the Engineer will issue a notice to indicate that he may recommend the Contractor be temporarily disqualified from bidding on Contracts with the Department as described in Section 102.08 of the Specifications, if progress remains unsatisfactory at the time of preparation of the next monthly progress estimate following the Engineer's notice. Prior to recommendation for removal from the list of pre-qualified bidders, the Engineer will allow the Contractor fourteen (14) calendar days from the date of the unsatisfactory performance notice to respond. Such "good faith" efforts shall be provided in sufficient detail to allow the Engineer to fully evaluate the Contractor's plans for recovery. As an example of good faith efforts, the Contractor may submit to the Engineer, a proposed recovery plan in the form of a Progress Schedule Update and a written statement to describe the Contractor's proposed actions and timeframe to correct the progress deficiency or schedule slippage. The Contractor may also submit to the Engineer a written explanation and supporting documentation to establish that such delinquency was attributable to conditions beyond his/her control. Any schedule adjustments resulting from a recovery plan will be reviewed in accordance with Section VII, but the modified Progress Schedule Update shall not replace the current SOR.

When the Engineer determines the Contractor's progress is again satisfactory the five (5) percent retainage previously withheld will be released to the Contractor in accordance with the provisions of Section 109.08 (c) of the Specifications.

If the Contractor is temporarily disqualified from bidding on Contracts with the Department, the Contractor will not be reinstated until either the Engineer deems that his/her progress has improved to the extent that the Work can be completed within the Contract time limit or the project has received final acceptance in accordance with the provisions of Section 108.09.

IX. MEASUREMENT AND PAYMENT

Required Progress Schedule submissions will be measured and paid for in accordance with the following:

A. Basis of Payment – Progress payments will be made in accordance with the following:

1. Progress payments for the Baseline Progress Schedule pay item will be made as follows:

a) A twenty-five (25) percent of the Contract bid item lump sum amount will be made upon acceptance of the Preliminary Progress Schedule submission.

b) A seventy-five (75) percent of the Contract bid item lump sum amount will be made upon acceptance of the Baseline Progress Schedule submission. When a Baseline Progress Schedule is provided in lieu of a Preliminary Progress Schedule, a payment of one hundred (100) percent of the Contract bid item lump sum amount will be made upon acceptance of the Baseline Progress Schedule submission.

2. Progress payments for the Progress Schedule Update pay item will be made as follows:

a) Progress payments of one each (1 EA) at the Contract bid item unit price will be made upon acceptance of the Progress Schedule Update submission.

b) A Revised Progress Schedule may be required in lieu of and paid for upon acceptance as a Progress Schedule Update, as determined by the Engineer. When a Revised Progress Schedule is required by the Engineer, in addition to a regular Progress Schedule Update submission, progress payments of one each (1 EA) at the Contract bid item unit price will be made under the pay item for Progress Schedule Updates upon acceptance of the Revised Progress Schedule submission.

c) Upon approval, the SIA shall be incorporated into the Progress Schedule Update or Revised Progress Schedule, as directed by the Engineer, and paid for as a Progress Schedule Update. When a SIA is required in addition to a regular Progress Schedule Update submission, progress payment of one each (1 EA) at the Contract bid item unit price will be made upon approval under the pay item for Progress Schedule Update.

d) Progress payments of one each (1 EA) at the Contract unit price will be made upon acceptance of the Final As-built Schedule submission.

3. No separate measurement and payment will be made for attendance of the Scheduling Conference, progress meetings or other schedule related meetings. All costs associated with attendance of the scheduling meetings will be considered incidental.

B. **Payment Items –** Payments for all associated costs to attend schedule meetings, prepare, update, revise, and/or furnish the Progress Schedule will made under the following pay items:

Pay Item	**Pay Unit**
Baseline Progress Schedule	Lump Sum
Progress Schedule Update	Each

S109D01-0609

VIRGINIA DEPARTMENT OF TRANSPORTATION
SPECIAL PROVISION FOR
PRICE ADJUSTMENT FOR STEEL

February 6, 2009

The Department will adjust monthly progress payments up or down as appropriate for cost changes in steel used on specific items of work identified in the contract in accordance with this provision. Provided within this Special Provision is a master listing of standard bid items the Department has determined are eligible for steel price adjustment.

Included with the bidding proposal is an automatically generated *project-specific* listing of *standard* bid items the Department has identified as eligible for steel price adjustment. Only items on this listing will be eligible for steel price adjustment. Generally, *non-standard* pay items will not be eligible for steel price adjustment unless such steel items are project-specific modifications of items normally eligible, are clearly and specifically identified by a separate and distinct steel pay item and the quantities present on the project constitute major items of the work, in which case such items may be addressed by project specific provisions and their related pay items designated in the bid proposal as being eligible. The listing of items eligible for steel price adjustment for a particular project will be shown on Form C-21C "Bid Items Eligible for Steel Price Adjustment" and included with the bidding documents. The Bidder may choose to have steel price adjustment applied to any, all or none of the eligible items shown on Form C-21C. The Bidder's selection of items for steel price adjustment or non selection (non participation) may not be changed once he has submitted Form C-21C to the Department

In order to confirm eligibility for steel price adjustment under this provision, within 15 calendar days after the date of the Contract Award letter, the Contractor shall submit to the State Contract Engineer on Form C-21C those pay items he chooses to have steel price adjustment applied on. Items the Contractor chooses for steel price adjustment must be designated by writing the word "Yes" in the column titled "Option" by each bid item chosen for adjustment. The Contractor's designations on Form C-21C must be written in ink or typed, and signed by the Contractor to be considered complete. Items not properly designated, or designated with "No" or left blank on the Contractor's C-21C "Bid Items Eligible for Steel Price Adjustment" form will automatically not be considered for adjustment. If the Contractor fails to return his Form C-21C within the timeframe specified, no steel items will be eligible for steel price adjustment on the designated project.

Please note: Inventoried materials from the listing of eligible items are specifically excluded for consideration. Additionally, items from the listing of eligible items for which the Contractor has requested payment as Material on Hand in accordance with the provisions of Section 109.09 are specifically excluded for consideration past the delivery date to the fabricator. This provision also does not allow for price adjustment for embedded steel where the steel item is a component of the finished bid item and there is no separate or distinct payment for the steel item or for steel used for pre-tensioned or post-tensioned precast components where furnishing steel is included in the unit price of the finished bid item.

The requirements of this provision shall apply only to material cost changes that occur between the date of the receipt of bids by the Department and the date the material is shipped to the fabricator. In addition to the requirements listed above, to be eligible for this price adjustment, the Contractor, subcontractor and/or supplier is required to place his purchase order for the steel items in his contract he has designated for price adjustment within 30 calendar days after the date of execution of this contract with the Department so as to better ensure reduced cost for steel used in such items. The timeliness of his response is also to insure the receipt of such items in a timely manner that shall not adversely affect his progress schedule or contract completion date. Further, in order for steel items to be eligible for adjustment, once shipped to the fabricator, the items shall be specifically stored, labeled, or tagged, recognizable by color marking, and identifiable by project for inspection and audit verification.

Within 14 days after the date of contract execution, the Contractor shall submit to the appropriate District Construction Engineer material price quotes, bid papers, or other similar type of documentation satisfactory to the Department for the bid items listed in the Contract for which it is requesting a steel price adjustment. This documentation shall support the completion of the form establishing the average price per pound for the eligible steel bid item. The Contractor must use the format as shown with this provision; no other format for presenting this information will be permitted. The Contractor shall certify that all items of documentation are original and were used in the computation of the amount bid for the represented eligible pay items for the month bids were opened. This documentation shall support the base line material price ("Base Price") of the steel item only. No adjustment will be made for changes in other components of the contract unit bid price, including, but not limited to, fabrication, shipping, storage, handling, and erection.

Failure to submit specifically required information such as purchase order, price data, bill of lading, material information or other requested information as noted herein will result in the Contractor not being eligible for price adjustment of steel items.

Price adjustment of each qualifying item under consideration will be subject to the following condition:

> There is an increase or decrease in the cost of eligible steel materials in excess of 10 percent up to a maximum of 60 percent from the Base Price when compared with the latest published price index ("Price Index") in effect at the time material is shipped to the fabricator.

The Price Index the Department is using is based on The U.S. Department of Labor, Bureau of Labor Statistics, Producers Price Index (PPI) which measures the average price change over time of the specific steel eligible item from the perspective of the seller of goods. The specific Producers Price Index (PPI) to be used to adjust the price for the eligible VDOT steel items is shown in the table below. **Please note**: The Producers Price Index (PPI) is subject to revision 4 months after original publication, therefore, price adjustments and payments will not be made until the index numbers are finalized.

The table attached to the end of this provision indicates the Producers Price Index (PPI) steel category index items and the corresponding I.D. numbers to which VDOT items will be compared.

The price adjustment will be determined by computing the percentage of change in index value beyond 10 percent above or below the index on the bid date to the index value on the date the steel material is shipped to the fabricator (Please see included sample examples). Weights and date of shipment must be documented by a bill of lading provided to the Department. The final price adjustment dollar value will be determined by multiplying this percent increase or decrease in the index (after 10%) by the represented quantity of steel shipped, by the Base Price per pound subject to the limitations herein.

Price increase/decrease will be computed as follows:

$$A = B \times P \times Q$$

Where;

- A = Steel price adjustment in lump sum dollars
- B = Average weighted price of steel submitted with bid on project in $ per pound
- P = Adjusted percentage change in PPI average from shipping date to bid date minus 10% (0.10) threshold
- Q = Total quantity of steel in pounds shipped to fabricator for specific project

Delays to the work caused by steel shortages may be justification for a contract time extension but will not constitute grounds for claims for standby equipment, extended office overhead, or other costs associated with such delays.

The need for application of the adjustments herein to extra work will be determined by the Engineer on an individual basis and, if appropriate, will be specified on the Work Order.

This price adjustment is capped at 60 percent. This means the maximum "P" value for increase or decrease that can be used in the above equation is 50% (60%-10% threshold).

Calculations for price adjustment shall be shown separate from the monthly progress estimate and will not be included in the total cost of work for determination of progress or for extension of contract time.

Any apparent attempt to unbalance bids in favor of items subject to price adjustment may result in rejection of the bid proposal.

20-Jan-05

Sample Form to be turned in for Steel Price Adjustment Provision
(All prices to be supported by project-specific quotes)

BID DATE 28-Apr-04

Bid Item 61720 High Strength Structural Steel

Supplier	Description of material	Unit price f.o.b supplier $/lbs	Quantity In lbs.	Price Extension	Date of Quote
XYZ mill	Structural beams Various sizes (see quote)	$0.28	1,200,000	$336,000.00	21-Apr-04
ABC distributing	Various channel & angle shapes (see quote)	$0.32	35,000	$11,200.00	20-Apr-04
		Total	1,235,000	$347,200.00	
		Average weighted price =		$0.2816	

Note: All prices are to include any surcharges on materials quoted as if they are shipped in the month the bid is submitted. Vendors must include this surcharge along with their base price on their quotes.

v

Sample Calculation of a Price Adjustment (increase)

Project bid on April 28, 2004.

Project has 450,000 lb. of structural steel.

Orders placed in timely manner and according to contract.

Contractor's *f.o.b. supplier price for the structural steel in bid is $0.2816 per pound. *free on board

Adjusted** BLS Producers Price Index (PPI) most recently published average at time of bid is 139.6.
** final change
after 4 months

All steel shipped to fabricator in same month, October 2004.

Adjusted BLS Producers Price Index (PPI) most recently published average for month of October is 161.1

Adjustment formula is as follows:

A = B X P X Q

Where;
- A = Steel price adjustment in lump sum dollars
- B = Average weighted price of steel submitted with bid on project in $ per pound
- P = Adjusted percentage change in PPI average from shipping date to bid date minus 10% (0.10) threshold
- Q = Total quantity of steel shipped to fabricator in October 2004 for this project in pounds

B = $0.2816

P = (161.1- 139.6)/139.6 – 0.10 = 0.054

Q = 450,000 lb.

A = 0.2816 x 0.054 x 450,000

A = $6,842.88 pay adjustment to Contractor

Sample Calculation of a Price Adjustment (decrease)

Project bid on April 28, 2004.

Project has 450,000 lb. of structural steel.

Orders placed in timely manner and according to contract.

Contractor's *f.o.b. supplier price for structural steel in bid is $0.2816 per pound. *free on board

Adjusted BLS Producers Price Index (PPI) most recently published average at time of bid is 156.6.

All steel shipped to fabricator in same month, October 2004.

Adjusted BLS Producers Price Index (PPI) most recently published average for month of October is 136.3

Adjustment formula is as follows:

A = B X P X Q

Where;
- A = Steel price adjustment in lump sum dollars
- B = Average weighted price of steel submitted with bid on project in $ per pound
- P = Adjusted percentage change in PPI average from shipping date to bid date minus 10% (0.10) threshold
- Q = Total quantity of steel shipped to fabricator in October 2004 for this project in pounds

B = $0.2816

P = (156.6 – 136.3)/156.6 – 0.10 = 0.030

Q = 450,000 lb.

A = 0.2816 x 0.030 x 450,000

A = $3,801.60 credit to Department

MASTER LISTING

STANDARD BID ITEMS ELIGIBLE FOR STEEL PRICE ADJUSTMENT

Sept. 24, 2008	rev # 1added 4 corrosion resistant re-bar items.	
Dec. 4, 2008	rev # 2 deleted item 68138 straighten structural steel	
January 14, 2009	rev # 3 identified BLS WPU used in $ adjustment	**BLS Series I. D.**
March 18, 2009	added items 61813,68109 & 68110	

ITEM NUMBER	ITEM DESCRIPTION	UNITS	Number WPU used in $ adjust.
00519	SHEET PILE, STEEL	SF	avg. 1017 & 101
00540	REINF. STEEL	LB	101704
00542	EPOXY COATED REINF. STEEL	LB	101704
00560	STRUCTURAL STEEL JB-1	LB	avg. 1017 & 101
11030	REINF. STEEL BRIDGE APPR. SLAB	LB	101704
11181	PATCH.HYDR.CEM.CONC. PAVE.	SY	101704
13290	GUARDRAIL GR-8 (NCHRP 350 TL-3)	LF	avg. 1017 & 101
13292	GUARDRAIL GR-8A (NCHRP 350 TL-3)	LF	avg. 1017 & 101
13294	GUARDRAIL GR-8B (NCHRP 350 TL-3)	LF	avg. 1017 & 101
13310	GUARDRAIL TERMINAL GR-6 (NCHRP 350)	LF	avg. 1017 & 101
13320	GUARDRAIL GR-2	LF	avg. 1017 & 101
13323	GUARDRAIL GR-2A	LF	avg. 1017 & 101
13331	RAD. GUARDRAIL GR-2	LF	avg. 1017 & 101
13333	RAD. GUARDRAIL GR-2A	LF	avg. 1017 & 101
13335	GUARDRAIL GR-3	LF	avg. 1017 & 101
13341	GUARDRAIL TER. GR-6(WEATHERING STEEL	LF	avg. 1017 & 101
13351	GUARDRAIL GR-8	LF	avg. 1017 & 101
13352	GUARDRAIL GR-8A	LF	avg. 1017 & 101
13353	GUARDRAIL GR-8B	LF	avg. 1017 & 101
13355	GUARDRAIL GR-10	LF	avg. 1017 & 101
13421	MEDIAN BARRIER MB-3	LF	avg. 1017 & 101
13450	MEDIAN BARRIER MB-5	LF	avg. 1017 & 101
13451	MEDIAN BARRIER MB-5A	LF	avg. 1017 & 101
13452	MEDIAN BARRIER MB-5B	LF	avg. 1017 & 101
13545	REINF. STEEL	LB	101704
14502	REINFORCING STEEL	LB	101704
15290	PATCH.CEM.CONC.PAVE.TY.CRCP-A	SY	101704
15302	PATCH.CEM.CONC.PAVE. TY. II	SY	101704
15305	PATCH.CEM.CONC.PAVE.TY. IV-A	SY	101704
17323	GUARDRAIL BEAM *	LF	avg. 1017 & 101
17325	RADIAL GUARDRAIL BEAM *	LF	avg. 1017 & 101
17327	RUB RAIL	LF	avg. 1017 & 101
17353	CABLE GR-3	LF	avg. 1017 & 101
17521	GUARDRAIL BEAM (WEATHERING STEEL)	LF	avg. 1017 & 101
17523	RADIAL GUARDRAIL BEAM (WEATHERING STEEL)	LF	avg. 1017 & 101
17525	RUB RAIL (WEATHERING STEEL)	LF	avg. 1017 & 101
22501	FENCE FE-W1	LF	avg. 1017 & 101
22643	FENCE FE-CL	LF	avg. 1017 & 101
22645	FENCE FE-CL VINYL COATED	LF	avg. 1017 & 101
23043	WATER GATE FE-4 TY.III	LF	avg. 1017 & 101
23501	FENCE FE-W1 (FABRIC ONLY)	LF	avg. 1017 & 101
45522	4" STEEL ENCASE. PIPE	LF	101706
45532	6" STEEL ENCASE. PIPE	LF	101706
45562	16" STEEL ENCASE. PIPE	LF	101706
45572	18" STEEL ENCASE. PIPE	LF	101706

45582	24" STEEL ENCASE. PIPE	LF	101706
45584	24" JACKED STEEL ENCASEMENT PIPE	LF	101706
45592	30" STEEL ENCASE. PIPE	LF	101706
50402	SIGN POST STEEL 3"	LF	101706
50404	SIGN POST STEEL 4"	LF	101706
50406	SIGN POST STEEL 6"	LF	101706
50410	SIGN POST STEEL 10"	LF	101706
50412	SIGN POST STEEL 12"	LF	101706
50414	SIGN POST STEEL 14"	LF	101706
50416	SIGN POST STEEL 16"	LF	101706
50418	SIGN POST STEEL 18"	LF	101706
51317	SIG. POLE MP-1 20' ONE ARM 30'	EA	101706
51319	SIG. POLE MP-1 20' ONE ARM 32'	EA	101706
51325	SIG. POLE MP-1 20' ONE ARM 38'	EA	101706
51327	SIG. POLE MP-1 20' ONE ARM 40'	EA	101706
51329	SIG. POLE MP-1 20' ONE ARM 42'	EA	101706
51331	SIG. POLE MP-1 20' ONE ARM 44'	EA	101706
51337	SIG. POLE MP-1 20' ONE ARM 50'	EA	101706
51339	SIG. POLE MP-1 20' ONE ARM 52'	EA	101706
51341	SIG. POLE MP-1 20' ONE ARM 54'	EA	101706
51344	SIG. POLE MP-1 20' ONE ARM 56'	EA	101706
51346	SIG. POLE MP-1 20' ONE ARM 58'	EA	101706
51347	SIG. POLE MP-1 20' ONE ARM 60'	EA	101706
51348	SIG. POLE MP-1 20' ONE ARM 62'	EA	101706
51368	SIG.POLE MP-1 20'TWO ARMS 36'& 42'	EA	101706
51400	SIG.POLE MP-1 CO.LU.ONE ARM 38	EA	101706
51402	SIG.POLE MP-1 CO.LU.ONE ARM 40	EA	101706
51408	SIG.POLE MP-1 CO.LU.ONE ARM 46	EA	101706
51412	SIG.POLE MP-1 CO.LU.ONE ARM 50	EA	101706
51414	SIG.POLE MP-1 CO.LU.ONE ARM 52	EA	101706
51416	SIG.POLE MP-1 CO.LU.ONE ARM 54	EA	101706
51418	SIG.POLE MP-1 CO.LU.ONE ARM 56	EA	101706
51420	SIG.POLE MP-1 CO.LU.ONE ARM 58	EA	101706
51422	SIG.POLE MP-1 CO.LU.ONE ARM 60	EA	101706
55162	LIGHTING POLE LP-1 30'-4'	EA	101706
55163	LIGHTING POLE LP-1 30'-6'	EA	101706
55166	LIGHTING POLE LP-1 30'-12'	EA	101706
55169	LIGHTING POLE LP-1 35'-6'	EA	101706
55171	LIGHTING POLE LP-1 35'-10'	EA	101706
55176	LIGHTING POLE LP-1 40'-8'	EA	101706
55185	LIGHTING POLE LP-2 TYPE A	EA	101706
55186	LIGHTING POLE LP-2 TYPE B	EA	101706
55187	LIGHTING POLE LP-2 TYPE C	EA	101706
55188	LIGHTING POLE LP-2 TYPE D	EA	101706
55189	LIGHTING POLE LP-2 TYPE E	EA	101706
55190	LIGHTING POLE LP-2 TYPE F	EA	101706
55192	LIGHTING POLE LP-2 TYPE H	EA	101706
60452	REINF. STEEL BRIDGE APPR. SLAB	LB	101704
61700	REINF. STEEL	LB	101704
61704	CORROSION RESISTANT REINF. STEEL	LB	101704
61705	EPOXY COATED REINF. STEEL	LB	101704
61750	STRUCT.STEEL HIGH STRG.PLT.GIRDERS	LB	avg. 1017 & 101
61811	STR.STEEL PLATE GIRDER ASTM A709 GRADE50	LB	avg. 1017 & 101
61812	STR.STEEL PLATE GIRDER ASTM A709 GRADE50	LB	avg. 1017 & 101
61813	STR.STEEL PLATE GIRDER ASTM A709 GRADEHPS50W	LB	avg. 1017 & 101
61814	STR.STEEL PLATE GIRDER ASTM A709 GRADEHPS70W	LB	avg. 1017 & 101
61820	STR.STEEL ROLLED BEAM ASTM A709 GRADE 36	LB	avg. 1017 & 101

61821	STR.STEEL ROLLED BEAM ASTM A709 GRADE50	LB	avg. 1017 & 101
61822	STR.STEEL ROLLED BEAM ASTM A709 GRADE50W	LB	avg. 1017 & 101
61990	STEEL GRID FLOOR	SF	avg. 1017 & 101
64110	STEEL PILES 10"	LF	avg. 1017 & 101
64112	STEEL PILES 12"	LF	avg. 1017 & 101
64114	STEEL PILES 14"	LF	avg. 1017 & 101
64768	DRIVING TEST FOR 12" STEEL PILE	LF	avg. 1017 & 101
64778	DRIVING TEST FOR 14" STEEL PILE	LF	avg. 1017 & 101
65200	REINF. STEEL	LB	101704
65204	CORROSION RESISTANT REINF. STEEL	LB	101704
65205	EPOXY COATED REINF. STEEL	LB	101704
67086	PED. FENCE 6'	LF	avg. 1017 & 101
67088	PED. FENCE 8'	LF	avg. 1017 & 101
67089	PED. FENCE 10'	LF	avg. 1017 & 101
68100	REINF. STEEL	LB	101704
68104	CORROSION RESISTANT REINF. STEEL	LB	101704
68105	EPOXY COATED REINF. STEEL	LB	101704
68107	STR.STEEL PLATE GIRDER ASTM A709 GRADE50	LB	avg. 1017 & 101
68108	STR. STEEL PLATE GIRDER ASTM A709 GR50W	LB	avg. 1017 & 101
68109	STR. STEEL PLATE GIRDER ASTM A709 GR.HPS50W	LB	avg. 1017 & 101
68110	STR. STEEL PLATE GIRDER ASTM A709 GR.HPS70W	LB	avg. 1017 & 101
68112	STR.STEEL ROLLED BEAM ASTM A709 GR.36	LB	avg. 1017 & 101
68113	STR.STEEL ROLLED BEAM ASTM A709 GR.50	LB	avg. 1017 & 101
68114	STR.STEEL ROLLED BEAM ASTM A709 GR. 50W	LB	avg. 1017 & 101
68115	STRUCT. STEEL	LB	avg. 1017 & 101
68270	REINF. STEEL BRIDGE APPR. SLAB	LB	101704
69060	SHEET PILES, STEEL	SF	avg. 1017 & 101
69100	REINF. STEEL	LB	101704
69104	CORROSION RESISTANT REINF. STEEL	LB	101704
69105	EPOXY COATED REINF. STEEL	LB	101704
69110	STEEL PILES 10"	LF	avg. 1017 & 101
69112	STEEL PILE 12"	LF	avg. 1017 & 101
69113	DRIVING TEST FOR 12" STEEL PILE	LF	avg. 1017 & 101

VIRGINIA DEPARTMENT OF TRANSPORTATION
SPECIAL PROVISION FOR
OPTIONAL ADJUSTMENT FOR FUEL

December 20, 2005c
Reissued July 2008c

The Department will adjust monthly progress payments up or down as appropriate for cost changes in fuel used on specific items of work identified in this provision. The Department will provide a master listing of standard bid items eligible for fuel adjustment on its website.

Included with this proposal is a listing of standard bid items the Department has identified as eligible for fuel adjustment on this project(s) as well as the respective fuel factors per pay unit for those items. Only items on this listing will be eligible for adjustment. The fuel usage factor for each item is considered inclusive of all fuel usage. Generally, non-standard pay items are not eligible for fuel adjustment.

The listing of eligible items applicable to this particular project is shown on Form C-21B "Bid Items Eligible for Fuel Adjustment" included with the bidding documents. The Bidder may choose to have fuel adjustment applied to any or all eligible items on this project's listing by designating the items for which the fuel adjustment will apply. The Bidder's selection of items for fuel adjustment may not be changed once he has submitted Form C-21B to the Department.

In order to be eligible for fuel adjustment under this provision, the apparent lowest responsive and responsible Bidder shall clearly identify on Form C-21B those pay items he chooses to have fuel adjustment applied on. Within 21 days after the receipt of bids the apparent successful Bidder shall submit his designated items on Form C-21B to the Contract Engineer. Items the successful Bidder chooses for fuel adjustment must be designated by writing the word "Yes" in the column titled "Option" by each bid item chosen for fuel adjustment. The successful Bidder's designations on Form C-21B must be written in ink or typed, and signed by this Bidder to be considered complete. Items not properly designated or left blank on the Bidder's C-21B "Bid Items Eligible for Fuel Adjustment" form will automatically not be considered for adjustment. If the apparent successful Bidder fails to return his Form C-21B within the timeframe specified, items will not be eligible for fuel adjustment on this project.

The monthly index price to be used in the administration of this provision will be calculated by the Department from the Diesel fuel prices published by the U. S. Department of Energy, Energy Information Administration on highway diesel prices, for the Lower Atlantic region. The monthly index price will be the price for diesel fuel calculated by averaging each of the weekly posted prices for that particular month.

For the purposes of this provision, the base index price will be calculated using the data from the month preceding the receipt of bids. The base index price will be posted by the Department at the beginning of the month for all bids received during that month.

The current index price will be posted by the Department and will be calculated using the data from the month preceding the particular estimate being vouchered for payment.

The current monthly quantity for eligible items of work selected by the Contractor for fuel adjustment will be multiplied by the appropriate fuel factor to determine the gallons of fuel to be cost adjusted. The amount of adjustment per gallon will be the net difference between the current index price and the base index price. Computation for adjustment will be made as follows:

$$S = (E - B)\ QF$$

Where; S = Monetary amount of the adjustment (plus or minus)
B = Base index price
E = Current index price
Q = Quantity of individual units of work
F = Appropriate fuel factor

Adjustments will not be made for work performed beyond the original contract time limit unless the original time limit has been changed by an executed Work Order.

If new pay items are added to this contract by Work Order and they are listed on Department's master listing of eligible items, the Work Order must indicate which of these individual items will be fuel adjusted; otherwise, those items will not be fuel adjusted. If applicable, designating which new pay items will be added for fuel adjustment must be determined during development of the Work Order and clearly shown on Form C-10 Work Order. The Base Index price on any new eligible pay items added by Work Order will be the Base Index price posted for the month in which bids were received for that particular project. The Current Index price for any new eligible pay items added by Work Order will be the Index price posted for the month preceding the estimate on which the Work Order is paid.

When quantities differ between the last monthly estimate prepared upon final acceptance and the final estimate, adjustment will be made using the appropriate current index for the period in which that specific item of work was last performed.

In the event any of the base fuel prices in this contract increase more than 100 percent (i.e. fuel prices double), the Engineer will review each affected item of work and give the Contractor written notice if work is to stop on any affected item of work. The Department reserves the right to reduce, eliminate or renegotiate the unit price for remaining portions of affected items of work.

Any amounts resulting from fuel adjustment will not be included in the total cost of work for determination of progress or for extension of contract time.

S109G03-1109

VIRGINIA DEPARTMENT OF TRANSPORTATION
SPECIAL PROVISION FOR
ASPHALT MATERIAL PRICE ADJUSTMENT

July 30, 2008cc

All asphalt material contained in the attached master listing of eligible bid items and designated by pay items in the contract will be price adjusted in accordance with the provisions as set forth herein. Other items will not be adjusted, except as otherwise specified in the contract. If new pay items which contain asphalt material are established by Work Order, they will not be subject to Price Adjustment unless specifically designated in the Work Order to be subject to Price Adjustment.

Each month, the Department will publish an average state-wide PG 64-22 f.o.b. price per ton developed from the average terminal prices provided to the Department from suppliers of asphalt cement to contractors doing work in Virginia. The Department will collect terminal prices from approximately 12 terminals each month. These prices will be received once each month from suppliers on or about the last weekday of the month. The high and low prices will be eliminated and the remaining values averaged to establish the average statewide price for the following month. That monthly state-wide average price will be posted on the Scheduling and Contract Division website on or about the first weekday of the following month.

This monthly statewide average price will be the Base Index for all contracts on which bids are received during the calendar month of its posting and will be the Current Index for all asphalt placed during the calendar month of its posting. In the event an index changes radically from the apparent trend, as determined by the Engineer, the Department may establish an index which it determines to best reflect the trend.

The amount of adjustment applied will be based on the difference between the contract Base Index and the Current Index for the applicable calendar month during which the work is performed. Adjustment of any asphalt material item designated as a price adjustment item which does not contain PG 64-22, except PG 76-22, will be based on the indexes for PG 64-22. The quantity of asphalt cement for asphalt concrete pavement to which adjustment will be applied will be the quantity based on the percent of asphalt cement shown on the appropriate approved job mix formula.

The quantity of asphalt emulsion for surface treatments to which adjustment will be applied will be the quantity based on 65 percent residual asphalt.

Price adjustment will be shown as a separate entry on the monthly progress estimate; however, such adjustment will not be included in the total cost of the work for progress determination or for extension of contract time.

Any apparent attempt to unbalance bids in favor of items subject to price adjustment or failure to submit required cost and price data as noted hereinbefore may result in rejection of the bid proposal.

VIRGINIA DEPARTMENT OF TRANSPORTATION

MASTER LISTING OF

ASPHALT MATERIAL ITEMS ELIGIBLE FOR PRICE ADJUSTMENT

(10-27-09)

ITEM	DESCRIPTION	UNITS	SPECIFICATION
10062	Asphalt-Stab. Open-Graded Material	Ton	313
10416	Liquid Asphalt	Gal	311 312
10420	Blotted Seal Coat Ty. B	Sy	ATTD
10422	Blotted Seal Coat Ty. C	Sy	ATTD
10423	Blotted Seal Coat Ty. C-1	Sy	ATTD
10424	Blotted Seal Coat Ty. D	Sy	ATTD
10598	Ns Asphalt Concrete	Ton	315
10606	Asphalt Concrete Ty. SM-9.5	Ton	315
10607	Asphalt Concrete Ty. SM-12.5A	Ton	315
10608	Asphalt Concrete Ty. SM-12.5D	Ton	315
10609	Asphalt Concrete Ty. SM-12.5E (76-22)	Ton	315
10610	Asphalt Concrete Ty. IM-19.0A	Ton	315
10611	Asphalt Concrete Ty. IM-19.0D	Ton	315
10612	Asphalt Conc. Base Cr. Ty. BM-25.0	Ton	315
10613	Asphalt Concrete Ty. BM-37.5	Ton	315
10635	Asphalt Concrete Ty. SM-9.5A	Ton	315
10636	Asphalt Concrete Ty. SM-9.5D	Ton	315
10637	Asphalt Concrete Ty. SM-9.5E (76-22)	Ton	315
10639	Asphalt Concrete Ty. SM-19.0	Ton	315
10642	Asphalt Concrete Ty. BM-25.0A	Ton	315
10643	Asphalt Concrete Ty. BM-25.0D	Ton	315
10650	Stone Matrix Asphalt SMA-9.5(70-22)	Ton	317
10651	Stone Matrix Asphalt SMA-9.5(76-22)	Ton	317
10652	Stone Matrix Asphalt SMA-12.5(70-22)	Ton	317
10653	Stone Matrix Asphalt SMA-12.5(76-22)	Ton	317
10654	Stone Matrix Asphalt SMA-19.0(70-22)	Ton	317
10655	Stone Matrix Asphalt SMA-19.0(76-22)	Ton	317
10701	Liquid Asphalt Coating	Sy	ATTD
12505	Asphalt Concrete Curb Backup Material	Ton	315
13240	Asphalt Concrete Sidewalk	Ton	504
16110	Emul. Asph. Slurry Seal Type A	Sy	ATTD
16120	Emul. Asph. Slurry Seal Type B	Sy	ATTD
16130	Emul. Asph. Slurry Seal Type C	Sy	ATTD
16144	Latex Mod. Emul. Treat. Type B	Ton	ATTD
16145	Latex Mod. Emul. Treat. Type C	Ton	ATTD
16146	Latex Mod. Emul. Treat. Rutfilling	Ton	ATTD
16161	Modified Single Seal	Sy	ATTD
16162	Modified Double Seal	Sy	ATTD
16249	Nontracking Tack Coat	Gal.	ATTD
16250	Liquid Asphalt Matl. CMS-2 (Mod)	Gal	ATTD
16251	Liquid Asphalt Matl. CMS-2	Gal	ATTD
16252	Liquid Asphalt Matl. CRS-2	Gal	ATTD
16253	Liquid Asphalt Matl. CRS-2H	Gal.	ATTD.

16254	Liquid Asphalt Matl. RC-250	Gal	ATTD
16256	Liquid Asphalt Matl. RC-800	Gal	ATTD
16257	Ns Liquid Asphalt Matl.	Gal	ATTD
16260	Liquid Asphalt Matl. CRS-2L	Gal	ATTD
16325	NS Asphalt Concrete	Ton	N/A
16330	Asphalt Concrete Ty. SM-9.0A	Ton	315
16335	Asphalt Concrete Ty. SM-9.5A	Ton	315
16337	Asph. Conc. Ty. SM-9.5ASL (Spot Level)	Ton	315
16340	Asphalt Concrete Ty. SM-9.5D	Ton	315
16342	Asph. Conc. Ty. SM-9.5DSL (Spot Level)	Ton	315
16345	Asphalt Concrete Ty. SM-9.5E (76-22)	Ton	315
16350	Asphalt Concrete Ty. SM-12.5A	Ton	315
16352	Asph. Con. Ty. SM-12.5ASL (Spot Level)	Ton	315
16355	Asphalt Concrete Ty. SM-12.5D	Ton	315
16357	Asph. Con. Ty. SM-12.5DSL (Spot Level)	Ton	315
16360	Asphalt Concrete Ty. SM-12.5E (76-22)	Ton	315
16365	Asphalt Concrete Ty. IM-19.0A	Ton	315
16370	Asphalt Concrete Ty. IM-19.0D	Ton	315
16373	Asphalt Concrete Ty. IM-19.0A (T)	Ton	315
16374	Asphalt Concrete Ty. IM-19.0D (T)	Ton	315
16377	Asphalt Concrete Ty. BM-37.5	Ton	315
16379	Asphalt Concrete Ty. IM-19.0T	Ton	315
16390	Asphalt Concrete Ty. BM-25.0A	Ton	315
16392	Asphalt Concrete Ty. BM-25.0D	Ton	315
16395	Asphalt Concrete Ty. BM-25.0A (T)	Ton	315
16397	Asphalt Concrete Ty. BM-25.0D (T)	Ton	315
16400	Stone Matrix Asphalt SMA-9.5(70-22)	Ton	ATTD
16401	Stone Matrix Asphalt SMA-9.5(76-22)	Ton	ATTD
16402	Stone Matrix Asphalt SMA-12.5(70-22)	Ton	ATTD
16403	Stone Matrix Asphalt SMA-12.5(76-22)	Ton	ATTD
16404	Stone Matrix Asphalt SMA-19.0(70-22)	Ton	ATTD
16405	Stone Matrix Asphalt SMA-19.0(76-22)	Ton	ATTD
16490	Hot Mix Asphalt Treatment	Ton	ATTD
16500	Surf.Preparation & Restoration Type I	Ton	ATTD
16502	Surf.Preparation & Restoration Type Ii	Ton	ATTD
16504	Surf.Preparation & Restoration Type Iii	Ton	ATTD
67201	NS Asphalt Concrete Overlay	Ton	315
67210	NS Asphalt Concrete	Ton	315
68240	NS Asphalt Concrete	Ton	315

PREDETERMINED MINIMUM WAGE RATES

General Decision Number: VA130051 01/04/2013 VA51

Superseded General Decision Number: VA20120051

State: Virginia

Construction Types: Heavy (Heavy and Sewer and Water Line)

Counties: Campbell and Lynchburg* Counties in Virginia.

*INDEPENDENT CITY

HEAVY CONSTRUCTION PROJECTS (Including Sewer and Water Lines)

Modification Number	Publication Date
0	01/04/2013

* SUVA2010-041 09/02/2010

	Rates	Fringes
CARPENTER	$ 12.83	0.77
CEMENT MASON/CONCRETE FINISHER	$ 19.00	3.83
ELECTRICIAN	$ 22.08	6.30
IRONWORKER, REINFORCING	$ 22.45	11.85
IRONWORKER, STRUCTURAL	$ 20.55	8.25
LABORERS		
Common or General	$ 8.96	
Flagger	$ 7.39	0.20
Landscape	$ 10.00	
Pipelayer	$ 11.04	1.70

POWER EQUIPMENT OPERATOR:

Backhoe	$ 12.08	
Bobcat/Skid Loader	$ 11.40	
Bulldozer	$ 20.63	7.28
Crane, All Types	$ 15.85	1.46
Excavator	$ 12.50	0.54
Loader	$ 11.71	2.11
Mechanic	$ 26.78	6.32
Trackhoe	$ 12.75	1.24
Tugboat	$ 19.00	
TRUCK DRIVER: All Dump Trucks	$ 11.08	

WELDERS - Receive rate prescribed for craft performing operation to which welding is incidental.

==========

Unlisted classifications needed for work not included within the scope of the classifications listed may be added after award only as provided in the labor standards contract clauses

(29CFR 5.5 (a) (1) (ii)).

The body of each wage determination lists the classification and wage rates that have been found to be prevailing for the cited type(s) of construction in the area covered by the wage determination. The classifications are listed in alphabetical order of "identifiers" that indicate whether the particular rate is union or non-union.

Union Identifiers

An identifier enclosed in dotted lines beginning with characters other than "SU" denotes that the union classification and rate have found to be prevailing for that classification. Example: PLUM0198-005 07/01/2011. The first four letters, PLUM, indicate the international union and the four-digit number, 0198,

that follows indicates the local union number or district council number where applicable, i.e., Plumbers Local 0198. The next number, 005 in the example, is an internal number used in processing the wage determination. The date, 07/01/2011, following these characters is the effective date of the most current negotiated rate/collective bargaining agreement which would be July 1, 2011 in the above example.

Union prevailing wage rates will be updated to reflect any changes in the collective bargaining agreements governing the rates.

0000/9999: weighted union wage rates will be published annually each January.

Non-Union Identifiers

Classifications listed under an "SU" identifier were derived from survey data by computing average rates and are not union rates; however, the data used in computing these rates may include both union and non-union data. Example: SULA2004-007 5/13/2010. SU indicates the rates are not union majority rates,
LA indicates the State of Louisiana; 2004 is the year of the survey; and 007 is an internal number used in producing the wage determination. A 1993 or later date, 5/13/2010, indicates the classifications and rates under that identifier were issued as a General Wage Determination on that date.
Survey wage rates will remain in effect and will not change until a new survey is conducted.

END OF GENERAL DECISION.

General Decision Number: VA130019 01/04/2013 VA19

Superseded General Decision Number: VA20120019

State: Virginia

Construction Type: Highway

Counties: Amherst, Bedford, Bedford*, Campbell and Lynchburg*

Counties in Virginia.

* INDEPENDENT CITIES

HIGHWAY CONSTRUCTION PROJECTS (excluding tunnels, building structures in rest area projects & railroad construction; bascule, suspension & spandrel arch bridges designed for commercial navigation, bridges involving marine construction; and other major bridges).

Modification Number Publication Date

0 01/04/2013

* SUVA2010-009 02/01/2011

	Rates	Fringes
CARPENTER (STRUCTURE)	$ 13.19	
CEMENT MASON/CONCRETE FINISHER	$ 15.00	
FORM SETTER	$ 8.50	
LABORER		
Asphalt Raker.	$ 12.47	
Construction Worker I		
(Skilled Laborer)	$ 12.77	
Construction Worker II		
(Laborer)	$ 10.77	
Flagger	$ 9.90	
Grade Checker	$ 11.00	
Guardrail Erector	$ 10.00	
Landscape Worker	$ 12.00	
Pipe Layer	$ 11.78	

Power Tool Operator.....$ 11.55

PAINTER.....$ 18.33

POWER EQUIPMENT OPERATOR:

Asphalt Distributor.....$ 13.75

Asphalt Paver.....$ 11.00

Backhoe .....$ 19.50

Drill .....$ 13.00

Excavator, Gradall.....$ 14.50

Front End Loader (2 cm & under) .....$ 11.25

Front End Loader (over 2 cm).....$ 11.25

Hydro Seeder .....$ 15.00

Mechanic.....$ 15.00

Motor Grader, Fine Grade.....$ 18.00

Pavement Marking Truck

Operator .....$ 15.00

Pavement Planing Operator.....$ 17.00

Pile Driver Operator .....$ 25.00

Roller (Finish).....$ 11.50

Roller (Rough).....$ 12.35

Scraper Pan .....$ 12.75

Slurry Seal Paver Machine.....$ 10.00

Slurry Seal Paver Truck

Operator .....$ 9.75

Stone-Spreader.....$ 15.69

Tractor Operator (Crawlers).....$ 12.35

Truck Operator (Utility).....$ 11.80

Vacuum Machine .....$ 15.05

TRAFFIC SIGNAL INSTALLER. .....$ 24.50

TRUCK DRIVER

Transit Mix Truck.....$ 11.80

Truck Driver (Single Rear

Axle) .....$ 11.36

Truck Driver (Multi-Rear Axle).....$ 13.02

Truck Driver (Tandem Rear

Axle) .....$ 9.75

Truck Driver, Heavy Duty

(7 c.y. & under).....$ 10.50

Truck Driver, Heavy Duty

(over 7 c.y.) .....$ 11.50

Truck, Utility.....$ 11.80

WELDER.....$ 16.75

WELDERS - Receive rate prescribed for craft performing operation to which welding is incidental.

==========

Unlisted classifications needed for work not included within the scope of the classifications listed may be added after award only as provided in the labor standards contract clauses

(29CFR 5.5 (a) (1) (ii)).

The body of each wage determination lists the classification and wage rates that have been found to be prevailing for the cited type(s) of construction in the area covered by the wage determination. The classifications are listed in alphabetical order of "identifiers" that indicate whether the particular rate is union or non-union.

Union Identifiers

An identifier enclosed in dotted lines beginning with characters other than "SU" denotes that the union classification and rate have found to be prevailing for that classification. Example: PLUM0198-005

07/01/2011. The first four letters, PLUM, indicate the international union and the four-digit number, 0198, that follows indicates the local union number or district council number where applicable , i.e., Plumbers Local 0198. The next number, 005 in the example, is an internal number used in processing the wage determination. The date, 07/01/2011, following these characters is the effective date of the most current negotiated rate/collective bargaining agreement which would be July 1, 2011 in the above example.

Union prevailing wage rates will be updated to reflect any changes in the collective bargaining agreements governing the rates.

0000/9999: weighted union wage rates will be published annually each January.

Non-Union Identifiers

Classifications listed under an "SU" identifier were derived from survey data by computing average rates and are not union rates; however, the data used in computing these rates may include both union and non-union data. Example: SULA2004-007 5/13/2010. SU indicates the rates are not union majority rates,
LA indicates the State of Louisiana; 2004 is the year of the survey; and 007 is an internal number used in producing the wage determination. A 1993 or later date, 5/13/2010, indicates the classifications and rates under that identifier were issued as a General Wage Determination on that date.

Survey wage rates will remain in effect and will not change until a new survey is conducted.

END OF GENERAL DECISION.

U.S. DEPARTMENT OF LABOR
OFFICE OF THE SECRETARY
WASHINGTON

DECISION OF THE SECRETARY

This case is before the Department of Labor pursuant to a request for a wage predetermination as required by law applicable to the work described.

A study has been made of wage conditions in the locality and based on information available to the Department of Labor the wage rates and fringe payments listed are hereby determined by the Secretary of Labor as prevailing for the described classes for labor in accordance with applicable law.

This wage determination decision and any modifications thereof during the period prior to the stated expiration date shall be made a part of every contract for performance of the described work as provided by applicable law and regulations of the Secretary of Labor, and the wage rates and fringe payments contained in this decision, including modifications, shall be the minimums to be paid under any such contract and subcontractors on the work.

The contracting officer shall require that any class of laborers and mechanics which is not listed in the wage determination and which is to be employed under the contract, shall be classified or reclassified conformably to the wage determination, and a report of the action taken shall be sent by the Federal agency to the Secretary of Labor. In the event the interested parties cannot agree on the proper classification or reclassification of a particular class of laborers and mechanics to be used, the question accompanied by the recommendation of the contracting officer shall be referred to the Secretary for determination.

Before using apprentices on the job the contractor shall present to the contracting officer written evidence of registration of such employees in a program of a State apprenticeship and training agency approved and recognized by the U.S. Bureau of Apprenticeship and Training. In the absence of such a State agency, the contractor shall submit evidence of approval and registration by the U.S. Bureau of Apprenticeship and Training.

The contractor shall submit to the contracting officer written evidence of the established apprentice-journeyman ratios and wage in the project area, which will be the basis for establishing such ratios and rates for the project under the applicable contract provisions.

Fringe payments include medical and hospital care, compensation for injuries or illness resulting from occupational activity, unemployment benefits, life insurance, disability and sickness insurance, accident insurance (all designated as health and welfare), pensions, vacation and holiday pay, apprenticeship or other similar programs and other bona fide fringe benefits.

By direction of the Secretary of Labor

E. Irving Manger, Associate Administrator
Division of Wage Determinations
Wage and Labor Standards Administration

The following Form **FHWA-1273** titled **REQUIRED CONTRACT PROVISIONS, FEDERAL-AID CONSTRUCTION CONTRACTS** shall apply to this contract:

==========

FHWA-1273 – Revised May 1, 2012

REQUIRED CONTRACT PROVISIONS
FEDERAL-AID CONSTRUCTION CONTRACTS

I. General
II. Nondiscrimination
III. Nonsegregated Facilities
IV. Davis-Bacon and Related Act Provisions
V. Contract Work Hours and Safety Standards Act Provisions
VI. Subletting or Assigning the Contract
VII. Safety: Accident Prevention
VIII. False Statements Concerning Highway Projects
IX. Implementation of Clean Air Act and Federal Water Pollution Control Act
X. Compliance with Governmentwide Suspension and Debarment Requirements
XI. Certification Regarding Use of Contract Funds for Lobbying

ATTACHMENTS

A. Employment and Materials Preference for Appalachian Development Highway System or Appalachian Local Access Road Contracts (included in Appalachian contracts only)

I. GENERAL

1. Form FHWA-1273 must be physically incorporated in each construction contract funded under Title 23 (excluding emergency contracts solely intended for debris removal). The contractor (or subcontractor) must insert this form in each subcontract and further require its inclusion in all lower tier subcontracts (excluding purchase orders, rental agreements and other agreements for supplies or services).

   The applicable requirements of Form FHWA-1273 are incorporated by reference for work done under any purchase order, rental agreement or agreement for other services. The prime contractor shall be responsible for compliance by any subcontractor, lower-tier subcontractor or service provider.

   Form FHWA-1273 must be included in all Federal-aid design-build contracts, in all subcontracts and in lower tier subcontracts (excluding subcontracts for design services, purchase orders, rental agreements and other agreements for supplies or services). The

design-builder shall be responsible for compliance by any subcontractor, lower-tier subcontractor or service provider.

Contracting agencies may reference Form FHWA-1273 in bid proposal or request for proposal documents, however, the Form FHWA-1273 must be physically incorporated (not referenced) in all contracts, subcontracts and lower-tier subcontracts (excluding purchase orders, rental agreements and other agreements for supplies or services related to a construction contract).

2. Subject to the applicability criteria noted in the following sections, these contract provisions shall apply to all work performed on the contract by the contractor's own organization and with the assistance of workers under the contractor's immediate superintendence and to all work performed on the contract by piecework, station work, or by subcontract.

3. A breach of any of the stipulations contained in these Required Contract Provisions may be sufficient grounds for withholding of progress payments, withholding of final payment, termination of the contract, suspension / debarment or any other action determined to be appropriate by the contracting agency and FHWA.

4. Selection of Labor: During the performance of this contract, the contractor shall not use convict labor for any purpose within the limits of a construction project on a Federal-aid highway unless it is labor performed by convicts who are on parole, supervised release, or probation. The term Federal-aid highway does not include roadways functionally classified as local roads or rural minor collectors.

II. NONDISCRIMINATION

The provisions of this section related to 23 CFR Part 230 are applicable to all Federal-aid construction contracts and to all related construction subcontracts of $10,000 or more. The provisions of 23 CFR Part 230 are not applicable to material supply, engineering, or architectural service contracts.

In addition, the contractor and all subcontractors must comply with the following policies: Executive Order 11246, 41 CFR 60, 29 CFR 1625-1627, Title 23 USC Section 140, the Rehabilitation Act of 1973, as amended (29 USC 794), Title VI of the Civil Rights Act of 1964, as amended, and related regulations including 49 CFR Parts 21, 26 and 27; and 23 CFR Parts 200, 230, and 633.

The contractor and all subcontractors must comply with: the requirements of the Equal Opportunity Clause in 41 CFR 60-1.4(b) and, for all construction contracts exceeding $10,000, the Standard Federal Equal Employment Opportunity Construction Contract Specifications in 41 CFR 60-4.3.

Note: The U.S. Department of Labor has exclusive authority to determine compliance with Executive Order 11246 and the policies of the Secretary of Labor including 41 CFR 60, and 29 CFR 1625-1627. The contracting agency and the FHWA have the authority and the responsibility to ensure compliance with Title 23 USC Section 140, the Rehabilitation Act of 1973, as amended (29 USC 794), and Title VI of the Civil Rights Act of 1964, as amended, and related regulations including 49 CFR Parts 21, 26 and 27; and 23 CFR Parts 200, 230, and 633.

The following provision is adopted from 23 CFR 230, Appendix A, with appropriate revisions to conform to the U.S. Department of Labor (US DOL) and FHWA requirements.

1. Equal Employment Opportunity: Equal employment opportunity (EEO) requirements not to discriminate and to take affirmative action to assure equal opportunity as set forth under laws, executive orders, rules, regulations (28 CFR 35, 29 CFR 1630, 29 CFR 1625-1627, 41 CFR 60 and 49 CFR 27) and orders of the Secretary of Labor as modified by the provisions prescribed herein, and imposed pursuant to 23 U.S.C. 140 shall constitute the

EEO and specific affirmative action standards for the contractor's project activities under this contract. The provisions of the Americans with Disabilities Act of 1990 (42 U.S.C. 12101 et seq.) set forth under 28 CFR 35 and 29 CFR 1630 are incorporated by reference in this contract. In the execution of this contract, the contractor agrees to comply with the following minimum specific requirement activities of EEO:

a. The contractor will work with the contracting agency and the Federal Government to ensure that it has made every good faith effort to provide equal opportunity with respect to all of its terms and conditions of employment and in their review of activities under the contract.

b. The contractor will accept as its operating policy the following statement:

> "It is the policy of this Company to assure that applicants are employed, and that employees are treated during employment, without regard to their race, religion, sex, color, national origin, age or disability. Such action shall include: employment, upgrading, demotion, or transfer; recruitment or recruitment advertising; layoff or termination; rates of pay or other forms of compensation; and selection for training, including apprenticeship, pre-apprenticeship, and/or on-the-job training."

2. **EEO Officer:** The contractor will designate and make known to the contracting officers an EEO Officer who will have the responsibility for and must be capable of effectively administering and promoting an active EEO program and who must be assigned adequate authority and responsibility to do so.

3. **Dissemination of Policy:** All members of the contractor's staff who are authorized to hire, supervise, promote, and discharge employees, or who recommend such action, or who are substantially involved in such action, will be made fully cognizant of, and will implement, the contractor's EEO policy and contractual responsibilities to provide EEO in each grade and classification of employment. To ensure that the above agreement will be met, the following actions will be taken as a minimum:

a. Periodic meetings of supervisory and personnel office employees will be conducted before the start of work and then not less often than once every six months, at which time the contractor's EEO policy and its implementation will be reviewed and explained. The meetings will be conducted by the EEO Officer.

b. All new supervisory or personnel office employees will be given a thorough indoctrination by the EEO Officer, covering all major aspects of the contractor's EEO obligations within thirty days following their reporting for duty with the contractor.

c. All personnel who are engaged in direct recruitment for the project will be instructed by the EEO Officer in the contractor's procedures for locating and hiring minorities and women.

d. Notices and posters setting forth the contractor's EEO policy will be placed in areas readily accessible to employees, applicants for employment and potential employees.

e. The contractor's EEO policy and the procedures to implement such policy will be brought to the attention of employees by means of meetings, employee handbooks, or other appropriate means.

4. **Recruitment:** When advertising for employees, the contractor will include in all advertisements for employees the notation: "An Equal Opportunity Employer." All such advertisements will be placed in publications having a large circulation among minorities and women in the area from which the project work force would normally be derived.

The contractor will, unless precluded by a valid bargaining agreement, conduct systematic and direct recruitment through public and private employee referral sources likely to yield qualified minorities and women. To meet this requirement, the contractor will identify sources of potential minority group employees, and establish with such identified sources procedures whereby minority and women applicants may be referred to the contractor for employment consideration.

In the event the contractor has a valid bargaining agreement providing for exclusive hiring hall referrals, the contractor is expected to observe the provisions of that agreement to the extent that the system meets the contractor's compliance with EEO contract provisions. Where implementation of such an agreement has the effect of discriminating against minorities or women, or obligates the contractor to do the same, such implementation violates Federal nondiscrimination provisions.

The contractor will encourage its present employees to refer minorities and women as applicants for employment. Information and procedures with regard to referring such applicants will be discussed with employees.

5. **Personnel Actions:** Wages, working conditions, and employee benefits shall be established and administered, and personnel actions of every type, including hiring, upgrading, promotion, transfer, demotion, layoff, and termination, shall be taken without regard to race, color, religion, sex, national origin, age or disability. The following procedures shall be followed:

   a. The contractor will conduct periodic inspections of project sites to insure that working conditions and employee facilities do not indicate discriminatory treatment of project site personnel.

   b. The contractor will periodically evaluate the spread of wages paid within each classification to determine any evidence of discriminatory wage practices.

   c. The contractor will periodically review selected personnel actions in depth to determine whether there is evidence of discrimination. Where evidence is found, the contractor will promptly take corrective action. If the review indicates that the discrimination may extend beyond the actions reviewed, such corrective action shall include all affected persons.

   d. The contractor will promptly investigate all complaints of alleged discrimination made to the contractor in connection with its obligations under this contract, will attempt to resolve such complaints, and will take appropriate corrective action within a reasonable time. If the investigation indicates that the discrimination may affect persons other than the complainant, such corrective action shall include such other persons. Upon completion of each investigation, the contractor will inform every complainant of all of their avenues of appeal.

6. **Training and Promotion:**

   a. The contractor will assist in locating, qualifying, and increasing the skills of minorities and women who are applicants for employment or current employees. Such efforts should be aimed at developing full journey level status employees in the type of trade or job classification involved.

b. Consistent with the contractor's work force requirements and as permissible under Federal and State regulations, the contractor shall make full use of training programs, i.e., apprenticeship, and on-the-job training programs for the geographical area of contract performance. In the event a special provision for training is provided under this contract, this subparagraph will be superseded as indicated in the special provision. The contracting agency may reserve training positions for persons who receive welfare assistance in accordance with 23 U.S.C. 140(a).

c. The contractor will advise employees and applicants for employment of available training programs and entrance requirements for each.

d. The contractor will periodically review the training and promotion potential of employees who are minorities and women and will encourage eligible employees to apply for such training and promotion.

7. **Unions:** If the contractor relies in whole or in part upon unions as a source of employees, the contractor will use good faith efforts to obtain the cooperation of such unions to increase opportunities for minorities and women. Actions by the contractor, either directly or through a contractor's association acting as agent, will include the procedures set forth below:

a The contractor will use good faith efforts to develop, in cooperation with the unions, joint training programs aimed toward qualifying more minorities and women for membership in the unions and increasing the skills of minorities and women so that they may qualify for higher paying employment.

b. The contractor will use good faith efforts to incorporate an EEO clause into each union agreement to the end that such union will be contractually bound to refer applicants without regard to their race, color, religion, sex, national origin, age or disability.

c. The contractor is to obtain information as to the referral practices and policies of the labor union except that to the extent such information is within the exclusive possession of the labor union and such labor union refuses to furnish such information to the contractor, the contractor shall so certify to the contracting agency and shall set forth what efforts have been made to obtain such information.

d. In the event the union is unable to provide the contractor with a reasonable flow of referrals within the time limit set forth in the collective bargaining agreement, the contractor will, through independent recruitment efforts, fill the employment vacancies without regard to race, color, religion, sex, national origin, age or disability; making full efforts to obtain qualified and/or qualifiable minorities and women. The failure of a union to provide sufficient referrals (even though it is obligated to provide exclusive referrals under the terms of a collective bargaining agreement) does not relieve the contractor from the requirements of this paragraph. In the event the union referral practice prevents the contractor from meeting the obligations pursuant to Executive Order 11246, as amended, and these special provisions, such contractor shall immediately notify the contracting agency.

8. **Reasonable Accommodation for Applicants / Employees with Disabilities:** The contractor must be familiar with the requirements for and comply with the Americans with Disabilities Act and all rules and regulations established there under. Employers must provide reasonable accommodation in all employment activities unless to do so would cause an undue hardship.

9. Selection of Subcontractors, Procurement of Materials and Leasing of Equipment: The contractor shall not discriminate on the grounds of race, color, religion, sex, national origin, age or disability in the selection and retention of subcontractors, including procurement of materials and leases of equipment. The contractor shall take all necessary and reasonable steps to ensure nondiscrimination in the administration of this contract.

a. The contractor shall notify all potential subcontractors and suppliers and lessors of their EEO obligations under this contract.

b. The contractor will use good faith efforts to ensure subcontractor compliance with their EEO obligations.

10. Assurance Required by 49 CFR 26.13(b):

a. The requirements of 49 CFR Part 26 and the State DOT's U.S. DOT-approved DBE program are incorporated by reference.

b. The contractor or subcontractor shall not discriminate on the basis of race, color, national origin, or sex in the performance of this contract. The contractor shall carry out applicable requirements of 49 CFR Part 26 in the award and administration of DOT-assisted contracts. Failure by the contractor to carry out these requirements is a material breach of this contract, which may result in the termination of this contract or such other remedy as the contracting agency deems appropriate.

11. Records and Reports: The contractor shall keep such records as necessary to document compliance with the EEO requirements. Such records shall be retained for a period of three years following the date of the final payment to the contractor for all contract work and shall be available at reasonable times and places for inspection by authorized representatives of the contracting agency and the FHWA.

a. The records kept by the contractor shall document the following:

(1) The number and work hours of minority and non-minority group members and women employed in each work classification on the project;

(2) The progress and efforts being made in cooperation with unions, when applicable, to increase employment opportunities for minorities and women; and

(3) The progress and efforts being made in locating, hiring, training, qualifying, and upgrading minorities and women;

b. The contractors and subcontractors will submit an annual report to the contracting agency each July for the duration of the project, indicating the number of minority, women, and non-minority group employees currently engaged in each work classification required by the contract work. This information is to be reported on Form FHWA-1391. The staffing data should represent the project work force on board in all or any part of the last payroll period preceding the end of July. If on-the-job training is being required by special provision, the contractor will be required to collect and report training data. The employment data should reflect the work force on board during all or any part of the last payroll period preceding the end of July.

III. NONSEGREGATED FACILITIES

This provision is applicable to all Federal-aid construction contracts and to all related construction subcontracts of $10,000 or more.

The contractor must ensure that facilities provided for employees are provided in such a manner that segregation on the basis of race, color, religion, sex, or national origin cannot result. The contractor may neither require such segregated use by written or oral policies nor tolerate such use by employee custom. The contractor's obligation extends further to ensure that its employees are not assigned to perform their services at any location, under the contractor's control, where the facilities are segregated. The term "facilities" includes waiting rooms, work areas, restaurants and other eating areas, time clocks, restrooms, washrooms, locker rooms, and other storage or dressing areas, parking lots, drinking fountains, recreation or entertainment areas, transportation, and housing provided for employees. The contractor shall provide separate or single-user restrooms and necessary dressing or sleeping areas to assure privacy between sexes.

IV. Davis-Bacon and Related Act Provisions

This section is applicable to all Federal-aid construction projects exceeding $2,000 and to all related subcontracts and lower-tier subcontracts (regardless of subcontract size). The requirements apply to all projects located within the right-of-way of a roadway that is functionally classified as Federal-aid highway. This excludes roadways functionally classified as local roads or rural minor collectors, which are exempt. Contracting agencies may elect to apply these requirements to other projects.

The following provisions are from the U.S. Department of Labor regulations in 29 CFR 5.5 “Contract provisions and related matters” with minor revisions to conform to the FHWA-1273 format and FHWA program requirements.

1. Minimum wages

a. All laborers and mechanics employed or working upon the site of the work, will be paid unconditionally and not less often than once a week, and without subsequent deduction or rebate on any account (except such payroll deductions as are permitted by regulations issued by the Secretary of Labor under the Copeland Act (29 CFR part 3)), the full amount of wages and bona fide fringe benefits (or cash equivalents thereof) due at time of payment computed at rates not less than those contained in the wage determination of the Secretary of Labor which is attached hereto and made a part hereof, regardless of any contractual relationship which may be alleged to exist between the contractor and such laborers and mechanics.

Contributions made or costs reasonably anticipated for bona fide fringe benefits under section 1(b)(2) of the Davis-Bacon Act on behalf of laborers or mechanics are considered wages paid to such laborers or mechanics, subject to the provisions of paragraph 1.d. of this section; also, regular contributions made or costs incurred for more than a weekly period (but not less often than quarterly) under plans, funds, or programs which cover the particular weekly period, are deemed to be constructively made or incurred during such weekly period. Such laborers and mechanics shall be paid the appropriate wage rate and fringe benefits on the wage determination for the classification of work actually performed, without regard to skill, except as provided in 29 CFR 5.5(a)(4). Laborers or mechanics performing work in more than one classification may be compensated at the rate specified for each classification for the time actually worked therein: Provided, That the employer's payroll records accurately set forth the time spent in each classification in which work is performed. The wage determination (including any additional classification and wage rates conformed under paragraph 1.b. of this section) and the Davis-Bacon poster (WH–1321) shall be posted at all times by the

contractor and its subcontractors at the site of the work in a prominent and accessible place where it can be easily seen by the workers.

b. (1) The contracting officer shall require that any class of laborers or mechanics, including helpers, which is not listed in the wage determination and which is to be employed under the contract shall be classified in conformance with the wage determination. The contracting officer shall approve an additional classification and wage rate and fringe benefits therefore only when the following criteria have been met:

(I) The work to be performed by the classification requested is not performed by a classification in the wage determination; and

(II) The classification is utilized in the area by the construction industry; and

(II) The proposed wage rate, including any bona fide fringe benefits, bears a reasonable relationship to the wage rates contained in the wage determination.

(2) If the contractor and the laborers and mechanics to be employed in the classification (if known), or their representatives, and the contracting officer agree on the classification and wage rate (including the amount designated for fringe benefits where appropriate), a report of the action taken shall be sent by the contracting officer to the Administrator of the Wage and Hour Division, Employment Standards Administration, U.S. Department of Labor, Washington, DC 20210. The Administrator, or an authorized representative, will approve, modify, or disapprove every additional classification action within 30 days of receipt and so advise the contracting officer or will notify the contracting officer within the 30-day period that additional time is necessary.

(3) In the event the contractor, the laborers or mechanics to be employed in the classification or their representatives, and the contracting officer do not agree on the proposed classification and wage rate (including the amount designated for fringe benefits, where appropriate), the contracting officer shall refer the questions, including the views of all interested parties and the recommendation of the contracting officer, to the Wage and Hour Administrator for determination. The Wage and Hour Administrator, or an authorized representative, will issue a determination within 30 days of receipt and so advise the contracting officer or will notify the contracting officer within the 30-day period that additional time is necessary.

(4) The wage rate (including fringe benefits where appropriate) determined pursuant to paragraphs 1.b.(2) or 1.b.(3) of this section, shall be paid to all workers performing work in the classification under this contract from the first day on which work is performed in the classification.

c. Whenever the minimum wage rate prescribed in the contract for a class of laborers or mechanics includes a fringe benefit which is not expressed as an hourly rate, the contractor shall either pay the benefit as stated in the wage determination or shall pay another bona fide fringe benefit or an hourly cash equivalent thereof.

d. If the contractor does not make payments to a trustee or other third person, the contractor may consider as part of the wages of any laborer or mechanic the amount of any costs reasonably anticipated in providing bona fide fringe benefits

under a plan or program, Provided, That the Secretary of Labor has found, upon the written request of the contractor, that the applicable standards of the Davis-Bacon Act have been met. The Secretary of Labor may require the contractor to set aside in a separate account assets for the meeting of obligations under the plan or program.

2. Withholding

The contracting agency shall upon its own action or upon written request of an authorized representative of the Department of Labor, withhold or cause to be withheld from the contractor under this contract, or any other Federal contract with the same prime contractor, or any other federally-assisted contract subject to Davis-Bacon prevailing wage requirements, which is held by the same prime contractor, so much of the accrued payments or advances as may be considered necessary to pay laborers and mechanics, including apprentices, trainees, and helpers, employed by the contractor or any subcontractor the full amount of wages required by the contract. In the event of failure to pay any laborer or mechanic, including any apprentice, trainee, or helper, employed or working on the site of the work, all or part of the wages required by the contract, the contracting agency may, after written notice to the contractor, take such action as may be necessary to cause the suspension of any further payment, advance, or guarantee of funds until such violations have ceased.

3. Payrolls and basic records

a. Payrolls and basic records relating thereto shall be maintained by the contractor during the course of the work and preserved for a period of three years thereafter for all laborers and mechanics working at the site of the work. Such records shall contain the name, address, and social security number of each such worker, his or her correct classification, hourly rates of wages paid (including rates of contributions or costs anticipated for bona fide fringe benefits or cash equivalents thereof of the types described in section 1(b)(2)(B) of the Davis-Bacon Act), daily and weekly number of hours worked, deductions made and actual wages paid. Whenever the Secretary of Labor has found under 29 CFR 5.5(a)(1)(iv) that the wages of any laborer or mechanic include the amount of any costs reasonably anticipated in providing benefits under a plan or program described in section 1(b)(2)(B) of the Davis-Bacon Act, the contractor shall maintain records which show that the commitment to provide such benefits is enforceable, that the plan or program is financially responsible, and that the plan or program has been communicated in writing to the laborers or mechanics affected, and records which show the costs anticipated or the actual cost incurred in providing such benefits. Contractors employing apprentices or trainees under approved programs shall maintain written evidence of the registration of apprenticeship programs and certification of trainee programs, the registration of the apprentices and trainees, and the ratios and wage rates prescribed in the applicable programs.

b. (1) The contractor shall submit weekly for each week in which any contract work is performed a copy of all payrolls to the contracting agency. The payrolls submitted shall set out accurately and completely all of the information required to be maintained under 29 CFR 5.5(a)(3)(i), except that full social security numbers and home addresses shall not be included on weekly transmittals. Instead the payrolls shall only need to include an individually identifying number for each employee (e.g. , the last four digits of the employee's social security number). The required weekly payroll information may be submitted in any form desired. Optional Form WH–347 is available for this purpose from the Wage and Hour Division Web site at http://www.dol.gov/esa/whd/forms/wh347instr.htm or its successor

site. The prime contractor is responsible for the submission of copies of payrolls by all subcontractors. Contractors and subcontractors shall maintain the full social security number and current address of each covered worker, and shall provide them upon request to the contracting agency for transmission to the State DOT, the FHWA or the Wage and Hour Division of the Department of Labor for purposes of an investigation or audit of compliance with prevailing wage requirements. It is not a violation of this section for a prime contractor to require a subcontractor to provide addresses and social security numbers to the prime contractor for its own records, without weekly submission to the contracting agency.

(2) Each payroll submitted shall be accompanied by a "Statement of Compliance," signed by the contractor or subcontractor or his or her agent who pays or supervises the payment of the persons employed under the contract and shall certify the following:

(I) That the payroll for the payroll period contains the information required to be provided under §5.5 (a)(3)(ii) of Regulations, 29 CFR part 5, the appropriate information is being maintained under §5.5 (a)(3)(i) of Regulations, 29 CFR part 5, and that such information is correct and complete;

(II) That each laborer or mechanic (including each helper, apprentice, and trainee) employed on the contract during the payroll period has been paid the full weekly wages earned, without rebate, either directly or indirectly, and that no deductions have been made either directly or indirectly from the full wages earned, other than permissible deductions as set forth in Regulations, 29 CFR part 3;

(III) That each laborer or mechanic has been paid not less than the applicable wage rates and fringe benefits or cash equivalents for the classification of work performed, as specified in the applicable wage determination incorporated into the contract.

(3) The weekly submission of a properly executed certification set forth on the reverse side of Optional Form WH–347 shall satisfy the requirement for submission of the "Statement of Compliance" required by paragraph 3.b.(2) of this section.

(4) The falsification of any of the above certifications may subject the contractor or subcontractor to civil or criminal prosecution under section 1001 of title 18 and section 231 of title 31 of the United States Code.

c. The contractor or subcontractor shall make the records required under paragraph 3.a. of this section available for inspection, copying, or transcription by authorized representatives of the contracting agency, the State DOT, the FHWA, or the Department of Labor, and shall permit such representatives to interview employees during working hours on the job. If the contractor or subcontractor fails to submit the required records or to make them available, the FHWA may, after written notice to the contractor, the contracting agency or the State DOT, take such action as may be necessary to cause the suspension of any further payment, advance, or guarantee of funds. Furthermore, failure to submit the required records upon request or to make such records available may be grounds for debarment action pursuant to 29 CFR 5.12.

4. Apprentices and trainees

a. Apprentices (programs of the USDOL).

Apprentices will be permitted to work at less than the predetermined rate for the work they performed when they are employed pursuant to and individually registered in a bona fide apprenticeship program registered with the U.S. Department of Labor, Employment and Training Administration, Office of Apprenticeship Training, Employer and Labor Services, or with a State Apprenticeship Agency recognized by the Office, or if a person is employed in his or her first 90 days of probationary employment as an apprentice in such an apprenticeship program, who is not individually registered in the program, but who has been certified by the Office of Apprenticeship Training, Employer and Labor Services or a State Apprenticeship Agency (where appropriate) to be eligible for probationary employment as an apprentice.

The allowable ratio of apprentices to journeymen on the job site in any craft classification shall not be greater than the ratio permitted to the contractor as to the entire work force under the registered program. Any worker listed on a payroll at an apprentice wage rate, who is not registered or otherwise employed as stated above, shall be paid not less than the applicable wage rate on the wage determination for the classification of work actually performed. In addition, any apprentice performing work on the job site in excess of the ratio permitted under the registered program shall be paid not less than the applicable wage rate on the wage determination for the work actually performed. Where a contractor is performing construction on a project in a locality other than that in which its program is registered, the ratios and wage rates (expressed in percentages of the journeyman's hourly rate) specified in the contractor's or subcontractor's registered program shall be observed.

Every apprentice must be paid at not less than the rate specified in the registered program for the apprentice's level of progress, expressed as a percentage of the journeymen hourly rate specified in the applicable wage determination. Apprentices shall be paid fringe benefits in accordance with the provisions of the apprenticeship program. If the apprenticeship program does not specify fringe benefits, apprentices must be paid the full amount of fringe benefits listed on the wage determination for the applicable classification. If the Administrator determines that a different practice prevails for the applicable apprentice classification, fringes shall be paid in accordance with that determination.

In the event the Office of Apprenticeship Training, Employer and Labor Services, or a State Apprenticeship Agency recognized by the Office, withdraws approval of an apprenticeship program, the contractor will no longer be permitted to utilize apprentices at less than the applicable predetermined rate for the work performed until an acceptable program is approved.

b. Trainees (programs of the USDOL).

Except as provided in 29 CFR 5.16, trainees will not be permitted to work at less than the predetermined rate for the work performed unless they are employed pursuant to and individually registered in a program which has received prior approval, evidenced by formal certification by the U.S. Department of Labor, Employment and Training Administration.

The ratio of trainees to journeymen on the job site shall not be greater than permitted under the plan approved by the Employment and Training Administration.

Every trainee must be paid at not less than the rate specified in the approved program for the trainee's level of progress, expressed as a percentage of the journeyman hourly rate specified in the applicable wage determination. Trainees shall be paid fringe benefits in accordance with the provisions of the trainee program. If the trainee program does not mention fringe benefits, trainees shall be paid the full amount of fringe benefits listed on the wage determination unless the Administrator of the Wage and Hour Division determines that there is an apprenticeship program associated with the corresponding journeyman wage rate on the wage determination which provides for less than full fringe benefits for apprentices. Any employee listed on the payroll at a trainee rate who is not registered and participating in a training plan approved by the Employment and Training Administration shall be paid not less than the applicable wage rate on the wage determination for the classification of work actually performed. In addition, any trainee performing work on the job site in excess of the ratio permitted under the registered program shall be paid not less than the applicable wage rate on the wage determination for the work actually performed.

In the event the Employment and Training Administration withdraws approval of a training program, the contractor will no longer be permitted to utilize trainees at less than the applicable predetermined rate for the work performed until an acceptable program is approved.

c. Equal employment opportunity. The utilization of apprentices, trainees and journeymen under this part shall be in conformity with the equal employment opportunity requirements of Executive Order 11246, as amended, and 29 CFR part 30.

d. Apprentices and Trainees (programs of the U.S. DOT).

Apprentices and trainees working under apprenticeship and skill training programs which have been certified by the Secretary of Transportation as promoting EEO in connection with Federal-aid highway construction programs are not subject to the requirements of paragraph 4 of this Section IV. The straight time hourly wage rates for apprentices and trainees under such programs will be established by the particular programs. The ratio of apprentices and trainees to journeymen shall not be greater than permitted by the terms of the particular program.

5. Compliance with Copeland Act requirements. The contractor shall comply with the requirements of 29 CFR part 3, which are incorporated by reference in this contract.

6. Subcontracts. The contractor or subcontractor shall insert Form FHWA-1273 in any subcontracts and also require the subcontractors to include Form FHWA-1273 in any lower tier subcontracts. The prime contractor shall be responsible for the compliance by any subcontractor or lower tier subcontractor with all the contract clauses in 29 CFR 5.5.

7. Contract termination: debarment. A breach of the contract clauses in 29 CFR 5.5 may be grounds for termination of the contract, and for debarment as a contractor and a subcontractor as provided in 29 CFR 5.12.

8. Compliance with Davis-Bacon and Related Act requirements. All rulings and interpretations of the Davis-Bacon and Related Acts contained in 29 CFR parts 1, 3, and 5 are herein incorporated by reference in this contract.

9. Disputes concerning labor standards. Disputes arising out of the labor standards provisions of this contract shall not be subject to the general disputes clause of this contract. Such disputes shall be resolved in accordance with the procedures of the

Department of Labor set forth in 29 CFR parts 5, 6, and 7. Disputes within the meaning of this clause include disputes between the contractor (or any of its subcontractors) and the contracting agency, the U.S. Department of Labor, or the employees or their representatives.

10. Certification of eligibility.

a. By entering into this contract, the contractor certifies that neither it (nor he or she) nor any person or firm who has an interest in the contractor's firm is a person or firm ineligible to be awarded Government contracts by virtue of section 3(a) of the Davis-Bacon Act or 29 CFR 5.12(a)(1).

b. No part of this contract shall be subcontracted to any person or firm ineligible for award of a Government contract by virtue of section 3(a) of the Davis-Bacon Act or 29 CFR 5.12(a)(1).

c. The penalty for making false statements is prescribed in the U.S. Criminal Code, 18 U.S.C. 1001.

V. CONTRACT WORK HOURS AND SAFETY STANDARDS ACT

The following clauses apply to any Federal-aid construction contract in an amount in excess of $100,000 and subject to the overtime provisions of the Contract Work Hours and Safety Standards Act. These clauses shall be inserted in addition to the clauses required by 29 CFR 5.5(a) or 29 CFR 4.6. As used in this paragraph, the terms laborers and mechanics include watchmen and guards.

1. Overtime requirements. No contractor or subcontractor contracting for any part of the contract work which may require or involve the employment of laborers or mechanics shall require or permit any such laborer or mechanic in any workweek in which he or she is employed on such work to work in excess of forty hours in such workweek unless such laborer or mechanic receives compensation at a rate not less than one and one-half times the basic rate of pay for all hours worked in excess of forty hours in such workweek.

2. Violation; liability for unpaid wages; liquidated damages. In the event of any violation of the clause set forth in paragraph (1.) of this section, the contractor and any subcontractor responsible therefor shall be liable for the unpaid wages. In addition, such contractor and subcontractor shall be liable to the United States (in the case of work done under contract for the District of Columbia or a territory, to such District or to such territory), for liquidated damages. Such liquidated damages shall be computed with respect to each individual laborer or mechanic, including watchmen and guards, employed in violation of the clause set forth in paragraph (1.) of this section, in the sum of $10 for each calendar day on which such individual was required or permitted to work in excess of the standard workweek of forty hours without payment of the overtime wages required by the clause set forth in paragraph (1.) of this section.

3. Withholding for unpaid wages and liquidated damages. The FHWA or the contacting agency shall upon its own action or upon written request of an authorized representative of the Department of Labor withhold or cause to be withheld, from any moneys payable on account of work performed by the contractor or subcontractor under any such contract or any other Federal contract with the same prime contractor, or any other federally-assisted contract subject to the Contract Work Hours and Safety Standards Act, which is held by the same prime contractor, such sums as may be determined to be necessary to satisfy any liabilities of such contractor or subcontractor for unpaid wages and liquidated damages as provided in the clause set forth in paragraph (2.) of this section.

4. **Subcontracts.** The contractor or subcontractor shall insert in any subcontracts the clauses set forth in paragraph (1.) through (4.) of this section and also a clause requiring the subcontractors to include these clauses in any lower tier subcontracts. The prime contractor shall be responsible for compliance by any subcontractor or lower tier subcontractor with the clauses set forth in paragraphs (1.) through (4.) of this section.

VI. SUBLETTING OR ASSIGNING THE CONTRACT

This provision is applicable to all Federal-aid construction contracts on the National Highway System.

1. The contractor shall perform with its own organization contract work amounting to not less than 30 percent (or a greater percentage if specified elsewhere in the contract) of the total original contract price, excluding any specialty items designated by the contracting agency. Specialty items may be performed by subcontract and the amount of any such specialty items performed may be deducted from the total original contract price before computing the amount of work required to be performed by the contractor's own organization (23 CFR 635.116).

   a. The term “perform work with its own organization” refers to workers employed or leased by the prime contractor, and equipment owned or rented by the prime contractor, with or without operators. Such term does not include employees or equipment of a subcontractor or lower tier subcontractor, agents of the prime contractor, or any other assignees. The term may include payments for the costs of hiring leased employees from an employee leasing firm meeting all relevant Federal and State regulatory requirements. Leased employees may only be included in this term if the prime contractor meets all of the following conditions:

      (1) the prime contractor maintains control over the supervision of the day-to-day activities of the leased employees;

      (2) the prime contractor remains responsible for the quality of the work of the leased employees;

      (3) the prime contractor retains all power to accept or exclude individual employees from work on the project; and

      (4) the prime contractor remains ultimately responsible for the payment of predetermined minimum wages, the submission of payrolls, statements of compliance and all other Federal regulatory requirements.

   b. "Specialty Items" shall be construed to be limited to work that requires highly specialized knowledge, abilities, or equipment not ordinarily available in the type of contracting organizations qualified and expected to bid or propose on the contract as a whole and in general are to be limited to minor components of the overall contract.

2. The contract amount upon which the requirements set forth in paragraph (1) of Section VI is computed includes the cost of material and manufactured products which are to be purchased or produced by the contractor under the contract provisions.

3. The contractor shall furnish (a) a competent superintendent or supervisor who is employed by the firm, has full authority to direct performance of the work in accordance with the contract requirements, and is in charge of all construction operations (regardless of who performs the work) and (b) such other of its own organizational resources (supervision,

management, and engineering services) as the contracting officer determines is necessary to assure the performance of the contract.

4. No portion of the contract shall be sublet, assigned or otherwise disposed of except with the written consent of the contracting officer, or authorized representative, and such consent when given shall not be construed to relieve the contractor of any responsibility for the fulfillment of the contract. Written consent will be given only after the contracting agency has assured that each subcontract is evidenced in writing and that it contains all pertinent provisions and requirements of the prime contract.

5. The 30% self-performance requirement of paragraph (1) is not applicable to design-build contracts; however, contracting agencies may establish their own self-performance requirements.

VII. SAFETY: ACCIDENT PREVENTION

This provision is applicable to all Federal-aid construction contracts and to all related subcontracts.

1. In the performance of this contract the contractor shall comply with all applicable Federal, State, and local laws governing safety, health, and sanitation (23 CFR 635). The contractor shall provide all safeguards, safety devices and protective equipment and take any other needed actions as it determines, or as the contracting officer may determine, to be reasonably necessary to protect the life and health of employees on the job and the safety of the public and to protect property in connection with the performance of the work covered by the contract.

2. It is a condition of this contract, and shall be made a condition of each subcontract, which the contractor enters into pursuant to this contract, that the contractor and any subcontractor shall not permit any employee, in performance of the contract, to work in surroundings or under conditions which are unsanitary, hazardous or dangerous to his/her health or safety, as determined under construction safety and health standards (29 CFR 1926) promulgated by the Secretary of Labor, in accordance with Section 107 of the Contract Work Hours and Safety Standards Act (40 U.S.C. 3704).

3. Pursuant to 29 CFR 1926.3, it is a condition of this contract that the Secretary of Labor or authorized representative thereof, shall have right of entry to any site of contract performance to inspect or investigate the matter of compliance with the construction safety and health standards and to carry out the duties of the Secretary under Section 107 of the Contract Work Hours and Safety Standards Act (40 U.S.C.3704).

VIII. FALSE STATEMENTS CONCERNING HIGHWAY PROJECTS

This provision is applicable to all Federal-aid construction contracts and to all related subcontracts.

In order to assure high quality and durable construction in conformity with approved plans and specifications and a high degree of reliability on statements and representations made by engineers, contractors, suppliers, and workers on Federal-aid highway projects, it is essential that all persons concerned with the project perform their functions as carefully, thoroughly, and honestly as possible. Willful falsification, distortion, or misrepresentation with respect to any facts related to the project is a violation of Federal law. To prevent any misunderstanding regarding the seriousness of these and similar acts, Form FHWA-1022 shall be posted on each Federal-aid highway project (23 CFR 635) in one or more places where it is readily available to all persons concerned with the project:

18 U.S.C. 1020 reads as follows:

"Whoever, being an officer, agent, or employee of the United States, or of any State or Territory, or whoever, whether a person, association, firm, or corporation, knowingly makes any false statement, false representation, or false report as to the character, quality, quantity, or cost of the material used or to be used, or the quantity or quality of the work performed or to be performed, or the cost thereof in connection with the submission of plans, maps, specifications, contracts, or costs of construction on any highway or related project submitted for approval to the Secretary of Transportation; or

Whoever knowingly makes any false statement, false representation, false report or false claim with respect to the character, quality, quantity, or cost of any work performed or to be performed, or materials furnished or to be furnished, in connection with the construction of any highway or related project approved by the Secretary of Transportation; or

Whoever knowingly makes any false statement or false representation as to material fact in any statement, certificate, or report submitted pursuant to provisions of the Federal-aid Roads Act approved July 1, 1916, (39 Stat. 355), as amended and supplemented;

Shall be fined under this title or imprisoned not more than 5 years or both."

IX. IMPLEMENTATION OF CLEAN AIR ACT AND FEDERAL WATER POLLUTION CONTROL ACT

This provision is applicable to all Federal-aid construction contracts and to all related subcontracts.

By submission of this bid/proposal or the execution of this contract, or subcontract, as appropriate, the bidder, proposer, Federal-aid construction contractor, or subcontractor, as appropriate, will be deemed to have stipulated as follows:

1. That any person who is or will be utilized in the performance of this contract is not prohibited from receiving an award due to a violation of Section 508 of the Clean Water Act or Section 306 of the Clean Air Act.

2. That the contractor agrees to include or cause to be included the requirements of paragraph (1) of this Section X in every subcontract, and further agrees to take such action as the contracting agency may direct as a means of enforcing such requirements.

X. CERTIFICATION REGARDING DEBARMENT, SUSPENSION, INELIGIBILITY AND VOLUNTARY EXCLUSION

This provision is applicable to all Federal-aid construction contracts, design-build contracts, subcontracts, lower-tier subcontracts, purchase orders, lease agreements, consultant contracts or any other covered transaction requiring FHWA approval or that is estimated to cost $25,000 or more – as defined in 2 CFR Parts 180 and 1200.

1. Instructions for Certification – First Tier Participants:

a. By signing and submitting this proposal, the prospective first tier participant is providing the certification set out below.

b. The inability of a person to provide the certification set out below will not necessarily result in denial of participation in this covered transaction. The prospective first tier participant shall submit an explanation of why it cannot provide the certification set out below. The certification or explanation will be considered in

connection with the department or agency's determination whether to enter into this transaction. However, failure of the prospective first tier participant to furnish a certification or an explanation shall disqualify such a person from participation in this transaction.

c. The certification in this clause is a material representation of fact upon which reliance was placed when the contracting agency determined to enter into this transaction. If it is later determined that the prospective participant knowingly rendered an erroneous certification, in addition to other remedies available to the Federal Government, the contracting agency may terminate this transaction for cause of default.

d. The prospective first tier participant shall provide immediate written notice to the contracting agency to whom this proposal is submitted if any time the prospective first tier participant learns that its certification was erroneous when submitted or has become erroneous by reason of changed circumstances.

e. The terms "covered transaction," "debarred," "suspended," "ineligible," "participant," "person," "principal," and "voluntarily excluded," as used in this clause, are defined in 2 CFR Parts 180 and 1200. “First Tier Covered Transactions” refers to any covered transaction between a grantee or subgrantee of Federal funds and a participant (such as the prime or general contract). “Lower Tier Covered Transactions” refers to any covered transaction under a First Tier Covered Transaction (such as subcontracts). “First Tier Participant” refers to the participant who has entered into a covered transaction with a grantee or subgrantee of Federal funds (such as the prime or general contractor). “Lower Tier Participant” refers any participant who has entered into a covered transaction with a First Tier Participant or other Lower Tier Participants (such as subcontractors and suppliers).

f. The prospective first tier participant agrees by submitting this proposal that, should the proposed covered transaction be entered into, it shall not knowingly enter into any lower tier covered transaction with a person who is debarred, suspended, declared ineligible, or voluntarily excluded from participation in this covered transaction, unless authorized by the department or agency entering into this transaction.

g. The prospective first tier participant further agrees by submitting this proposal that it will include the clause titled "Certification Regarding Debarment, Suspension, Ineligibility and Voluntary Exclusion-Lower Tier Covered Transactions," provided by the department or contracting agency, entering into this covered transaction, without modification, in all lower tier covered transactions and in all solicitations for lower tier covered transactions exceeding the $25,000 threshold.

h. A participant in a covered transaction may rely upon a certification of a prospective participant in a lower tier covered transaction that is not debarred, suspended, ineligible, or voluntarily excluded from the covered transaction, unless it knows that the certification is erroneous. A participant is responsible for ensuring that its principals are not suspended, debarred, or otherwise ineligible to participate in covered transactions. To verify the eligibility of its principals, as well as the eligibility of any lower tier prospective participants, each participant may, but is not required to, check the Excluded Parties List System website (https://www.epls.gov/), which is compiled by the General Services Administration.

i. Nothing contained in the foregoing shall be construed to require the establishment of a system of records in order to render in good faith the certification required by

this clause. The knowledge and information of the prospective participant is not required to exceed that which is normally possessed by a prudent person in the ordinary course of business dealings.

j. Except for transactions authorized under paragraph (f) of these instructions, if a participant in a covered transaction knowingly enters into a lower tier covered transaction with a person who is suspended, debarred, ineligible, or voluntarily excluded from participation in this transaction, in addition to other remedies available to the Federal Government, the department or agency may terminate this transaction for cause or default.

* * * * *

2. Certification Regarding Debarment, Suspension, Ineligibility and Voluntary Exclusion – First Tier Participants:

a. The prospective first tier participant certifies to the best of its knowledge and belief, that it and its principals:

(1) Are not presently debarred, suspended, proposed for debarment, declared ineligible, or voluntarily excluded from participating in covered transactions by any Federal department or agency;

(2) Have not within a three-year period preceding this proposal been convicted of or had a civil judgment rendered against them for commission of fraud or a criminal offense in connection with obtaining, attempting to obtain, or performing a public (Federal, State or local) transaction or contract under a public transaction; violation of Federal or State antitrust statutes or commission of embezzlement, theft, forgery, bribery, falsification or destruction of records, making false statements, or receiving stolen property;

(3) Are not presently indicted for or otherwise criminally or civilly charged by a governmental entity (Federal, State or local) with commission of any of the offenses enumerated in paragraph (a)(2) of this certification; and

(4) Have not within a three-year period preceding this application/proposal had one or more public transactions (Federal, State or local) terminated for cause or default.

b. Where the prospective participant is unable to certify to any of the statements in this certification, such prospective participant shall attach an explanation to this proposal.

2. Instructions for Certification - Lower Tier Participants:

(Applicable to all subcontracts, purchase orders and other lower tier transactions requiring prior FHWA approval or estimated to cost $25,000 or more - 2 CFR Parts 180 and 1200)

a. By signing and submitting this proposal, the prospective lower tier is providing the certification set out below.

b. The certification in this clause is a material representation of fact upon which reliance was placed when this transaction was entered into. If it is later determined that the prospective lower tier participant knowingly rendered an erroneous certification, in addition to other remedies available to the Federal Government,

the department, or agency with which this transaction originated may pursue available remedies, including suspension and/or debarment.

c. The prospective lower tier participant shall provide immediate written notice to the person to which this proposal is submitted if at any time the prospective lower tier participant learns that its certification was erroneous by reason of changed circumstances.

d. The terms "covered transaction," "debarred," "suspended," "ineligible," "participant," "person," "principal," and "voluntarily excluded," as used in this clause, are defined in 2 CFR Parts 180 and 1200. You may contact the person to which this proposal is submitted for assistance in obtaining a copy of those regulations. “First Tier Covered Transactions” refers to any covered transaction between a grantee or subgrantee of Federal funds and a participant (such as the prime or general contract). “Lower Tier Covered Transactions” refers to any covered transaction under a First Tier Covered Transaction (such as subcontracts). “First Tier Participant” refers to the participant who has entered into a covered transaction with a grantee or subgrantee of Federal funds (such as the prime or general contractor). “Lower Tier Participant” refers any participant who has entered into a covered transaction with a First Tier Participant or other Lower Tier Participants (such as subcontractors and suppliers).

e. The prospective lower tier participant agrees by submitting this proposal that, should the proposed covered transaction be entered into, it shall not knowingly enter into any lower tier covered transaction with a person who is debarred, suspended, declared ineligible, or voluntarily excluded from participation in this covered transaction, unless authorized by the department or agency with which this transaction originated.

f. The prospective lower tier participant further agrees by submitting this proposal that it will include this clause titled "Certification Regarding Debarment, Suspension, Ineligibility and Voluntary Exclusion-Lower Tier Covered Transaction," without modification, in all lower tier covered transactions and in all solicitations for lower tier covered transactions exceeding the $25,000 threshold.

g. A participant in a covered transaction may rely upon a certification of a prospective participant in a lower tier covered transaction that is not debarred, suspended, ineligible, or voluntarily excluded from the covered transaction, unless it knows that the certification is erroneous. A participant is responsible for ensuring that its principals are not suspended, debarred, or otherwise ineligible to participate in covered transactions. To verify the eligibility of its principals, as well as the eligibility of any lower tier prospective participants, each participant may, but is not required to, check the Excluded Parties List System website (https://www.epls.gov/), which is compiled by the General Services Administration.

h. Nothing contained in the foregoing shall be construed to require establishment of a system of records in order to render in good faith the certification required by this clause. The knowledge and information of participant is not required to exceed that which is normally possessed by a prudent person in the ordinary course of business dealings.

i. Except for transactions authorized under paragraph e of these instructions, if a participant in a covered transaction knowingly enters into a lower tier covered transaction with a person who is suspended, debarred, ineligible, or voluntarily excluded from participation in this transaction, in addition to other remedies available to the Federal Government, the department or agency with which this

transaction originated may pursue available remedies, including suspension and/or debarment.

* * * * *

Certification Regarding Debarment, Suspension, Ineligibility and Voluntary Exclusion--Lower Tier Participants:

1. The prospective lower tier participant certifies, by submission of this proposal, that neither it nor its principals is presently debarred, suspended, proposed for debarment, declared ineligible, or voluntarily excluded from participating in covered transactions by any Federal department or agency.

2. Where the prospective lower tier participant is unable to certify to any of the statements in this certification, such prospective participant shall attach an explanation to this proposal.

* * * * *

XI. CERTIFICATION REGARDING USE OF CONTRACT FUNDS FOR LOBBYING

This provision is applicable to all Federal-aid construction contracts and to all related subcontracts which exceed $100,000 (49 CFR 20).

1. The prospective participant certifies, by signing and submitting this bid or proposal, to the best of his or her knowledge and belief, that:

   a. No Federal appropriated funds have been paid or will be paid, by or on behalf of the undersigned, to any person for influencing or attempting to influence an officer or employee of any Federal agency, a Member of Congress, an officer or employee of Congress, or an employee of a Member of Congress in connection with the awarding of any Federal contract, the making of any Federal grant, the making of any Federal loan, the entering into of any cooperative agreement, and the extension, continuation, renewal, amendment, or modification of any Federal contract, grant, loan, or cooperative agreement.

   b. If any funds other than Federal appropriated funds have been paid or will be paid to any person for influencing or attempting to influence an officer or employee of any Federal agency, a Member of Congress, an officer or employee of Congress, or an employee of a Member of Congress in connection with this Federal contract, grant, loan, or cooperative agreement, the undersigned shall complete and submit Standard Form-LLL, "Disclosure Form to Report Lobbying," in accordance with its instructions.

2. This certification is a material representation of fact upon which reliance was placed when this transaction was made or entered into. Submission of this certification is a prerequisite for making or entering into this transaction imposed by 31 U.S.C. 1352. Any person who fails to file the required certification shall be subject to a civil penalty of not less than $10,000 and not more than $100,000 for each such failure.

3. The prospective participant also agrees by submitting its bid or proposal that the participant shall require that the language of this certification be included in all lower tier subcontracts, which exceed $100,000 and that all such recipients shall certify and disclose accordingly.

VIRGINIA DEPARTMENT OF TRANSPORTATION
SPECIAL PROVISION FOR

NOTICE OF REQUIREMENT FOR AFFIRMATIVE ACTION TO ENSURE EQUAL EMPLOYMENT OPPORTUNITY (EXECUTIVE ORDER 11246)

1. The Offeror's or Bidder's attention is called to the "Equal Opportunity Clause" and the "Standard Federal Equal Employment Opportunity Construction Contract Specifications" set forth herein.

2. The goals for female and minority participation, expressed in percentage terms of the Contractor's aggregate work force in each trade on all construction works in the covered area, are as follows:

   Females- 6.9%
   Minorities - See Attachment "A"

   The goals are applicable to all the Contractor's construction work performed in the covered area, whether or not it is Federal or federally assisted. If the Contractor performs construction work in a geographical area located outside of the covered area, it shall apply the goals established for such geographical area where the work is actually performed. With regard to this second area, the Contractor also is subject to the goals for both its federally involved and non-federally involved construction.

   The Contractor's compliance with the Executive Order and the regulations in 41 CFR Part 60-4 shall be based on its implementation of the Equal Opportunity Clause, specific affirmative action obligations required by the specifications, set forth in 41 CFR 60-4.3(a), and its efforts to meet the goals established herein. The hours of minority and female employment and training must be substantially uniform throughout the length of the contract, and in each trade, and the Contractor shall make a good faith effort to employ minorities and women evenly on each of its projects. The transfer of minority or female employees or trainees from Contractor to Contractor or from project to project for the sole purpose of meeting the Contractor's goals shall be a violation of the contract, the Executives Order and the regulations in 41 CFR Part 60-4. Compliance with the goals will be measured against the total work hours performed.

3. The Contractor shall provide written notification to the Director of the Office of Federal Contract Compliance Programs <u>within 10 workings days</u> the award of any construction subcontract in excess of $10,000 at any tier for construction works under this contract. The notification shall list the name, address and telephone number of the subcontractor, employer identification number, estimated dollar amount of the subcontract, estimated starting and completion dates of the subcontract and the geographical area in which the contract is to be performed.

STANDARD FEDERAL EQUAL EMPLOYMENT OPPORTUNITY CONSTRUCTION CONTRACT SPECIFICATIONS (EXECUTIVE ORDER 11246)

1. As, used in this provision:

   a. "Covered area" means the geographical area described in the solicitation from which this contract resulted;

   b. "Director" means Director, Office of Federal Contract Compliance Programs, United States Department of Labor, or any person to whom the Director delegates authority;

   c. "Employer identification number" means the Federal Social Security number used on the Employer's Quarterly Federal Tax Return, U. S. Treasury Department Form 941;

   d. "Minority" includes:

(i) Black (all persons having origins in any of the Black African racial groups not of Hispanic origin);

(ii) Hispanic (all persons of Mexican, Puerto Rican, Cuban, Central or South American or other Spanish Culture or origin, regardless of race);

(iii) Asian and Pacific Islander (all persons having origins in any of the original peoples of the Far East, Southeast Asia, the Indian Subcontinent, or the Pacific Islands); and

(iv) American Indian or Alaskan Native (all persons having origins in any of the original peoples of North America and maintaining identifiable tribal affiliations through membership and participation or community identification).

2. Whenever the Contractor, or any Subcontractor at any tier, subcontracts a portion of the work involving any construction trade, it shall physically include in each subcontract in excess of $10,000 the provisions of these specifications and the Notice which contains the applicable goals for minority and female participation.

3. If the Contractor is participating (pursuant to 41 CFR 60-4.5) in a Hometown Plan approved by the U. S. Department of Labor in the covered area either individually or through an association, its affirmative action obligations on all work in the Plan area (including goals and timetables) shall be in accordance with that Plan for those trades which have unions participating in the Plan. Contractors must be able to demonstrate their participation in and compliance with the provisions of any such Hometown Plan. Each Contractor or Subcontractor participating in an approved Plan is individually required to comply with its obligations under the EEO clause, and to make a good faith effort to achieve each goal under the Plan in each trade in which it has employees. The overall good faith performance by other Contractors and Subcontractors toward a goal in an approved Plan does not excuse any covered Contractor's or Subcontractor's failure to take good faith efforts to achieve the Plan goals and timetables.

4. The Contractor shall implement the specific affirmative action standards provided in paragraphs 7 a through p of these specifications. The goals set forth in the solicitation from which this contract resulted are expressed as percentages of the total hours of employment and training of minority and female utilization the Contractor should reasonably be able to achieve in each construction trade in which it has employees in the coverer area. Covered construction Contractors performing construction work in geographical areas where they do not have a Federal or federally assisted construction contract shall apply the minority and female goals established for the geographical area where the work is being performed. Goals are published periodically in the Federal Register in notice form, and such notices may be obtained from any Office of Federal Contract Compliance Programs office or from Federal procurement contracting officers. The Contractor is expected to make substantially uniform progress in meeting its goals in each craft during the period specified.

5. Neither the provisions of any collective bargaining agreement, nor the failure by a union with whom the Contractor has a collective bargaining agreement, to refer either minorities or women shall excuse the Contractor's obligations under these specifications, Executive Order 11246, or the regulations promulgated pursuant thereto.

6. In order for the nonworking training hours of apprentices and trainees to be counted in meeting the goals, such apprentices and trainees must be employed by the Contractor during the training period, and the Contractor must have made a commitment to employ the apprentices and trainees at the completion of their training, subject to the availability of employment opportunities. Trainees must be trained pursuant to training programs approved by the U. S. Department of Labor.

7. The Contractor shall take specific affirmative actions to ensure equal employment opportunity. The evaluation of the Contractor's compliance with these specifications shall be based upon its effort to achieve maximum results from its actions. The Contractor shall document these efforts fully, and shall implement affirmative action steps at least as extensive as the following:

a. Ensure and maintain a working environment free of harassment, intimidation, and coercion at all sites, and in all facilities at which the Contractor's employees are assigned to work. The Contractor, where possible, shall assign two or more women to each construction project. The Contractor shall specifically ensure that all foreman, superintendents and other on-site supervisory personnel are aware of and carry out the Contractor's obligation to maintain such a working environment, with specific attention to minority or female individuals working at such sites in such facilities.

b. Establish and maintain a current list of minority and female recruitment sources, provide written notification to minority and female recruitment sources and to community organizations when the Contractor or its unions have employment opportunities available, and maintain a record of the organizations' responses.

c. Maintain a current file of the names, addresses and telephone numbers of each minority and female off the street applicant and minority or female referral from a union, a recruitment source or community organization and of what action was taken with respect to each such individual. If such individual was sent to the union hiring hall for referral and was not referred back to the Contractor by the union, or if referred, not employed by the Contractor, this shall be documented in the file with the reason therefore, along with whatever additional actions the Contractor may have taken.

d. Provide immediate written notification to the Director when the union or unions which the Contractor has a collective bargaining agreement has not referred to the Contractor a minority person or women sent by the Contractor, or when the Contractor has other information that the union referral process has impeded the Contractor's efforts to meet its obligations.

e. Develop on-the-job training opportunities and/or participate in training programs for the area which expressly include minorities and women, including upgrading programs and apprenticeship and trainee programs relevant to the Contractor's employment needs, especially those programs funded or approved by the Department of Labor. The Contractor shall provide notice of these programs to the sources complied under 7b above.

f. Disseminate the Contractor's EEO policy by providing notice of the policy to unions and training programs and requesting their cooperation in assisting the Contractor in meeting its EEO obligations; by including it in any policy manual and collective bargaining agreement; by publicizing it in the company newspaper or annual report; by specific review of the policy with all management personnel and with all minority and female employees at least once a year; and by posting the company EEO policy on bulletin boards accessible to all employees at each location where construction work is performed.

g. Review, at least annually, the company's EEO policy and affirmative action obligations under these specifications with all employees having any responsibility for hiring, assignment, layoff, termination, or other employment decisions including specific review of these items with onsite supervisory personnel such as Superintendents and General Foremen prior to the initiation of construction work at any job site. A written record shall be made and maintained identifying the time and place of these meetings, persons attending, subject matter discussed and disposition of the subject matter.

h. Disseminate the Contractor's EEO policy externally by including in any news media advertisement that the Contractor is "An Equal Opportunity Employer" for minority and female, and providing written notification to and discussing the Contractor's EEO policy with other Contractors and Subcontractors with whom the Contractor does or anticipates doing business.

i. Directs its recruitment efforts, both oral and written, to minority, female and community organizations, to schools with minority and female students and to minority and recruitment and training organizations serving the Contractor's recruitment area and employment needs. Not later than one month prior to the date for the acceptance of applications for apprenticeship or other training by recruitment source, the Contractor shall send written notification to organizations such as the above, describing the openings, screening procedures and tests to be used m the selection process.

j. Encourage present minority and female employees to recruit other minority persons and women and, where reasonable, provide after school, summer and vacation employment to minority and female youth both on the site and in other areas of Contractor's workforce.

k. Validate all tests and other selection requirements where there is an obligation to do so under 41 CFR Part 60-3.

l. Conduct, at least annually, an inventory and evaluation of all minority and female personnel for promotional opportunities and encourage these employees to seek or to prepare for such opportunities through appropriate training or other means.

m. Ensure that seniority practices, job classifications, work assignments and other personnel practices, do not have a discriminatory effect by continually monitoring all personnel and employment related activities to ensure that the EEO policy and the Contractor's obligations under these specifications are being carried out.

n. Ensure that all facilities and company activities are nonsegregated, except that separate or single-user toilet and necessary changing facilities shall be provided to assure privacy between the sexes.

o. Document and maintain a record of all solicitations of offers for subcontracts from minority and female construction contractors and suppliers, including circulation of solicitations to minority and female contractor associations and other business associations.

p. Conduct a review, at least annually, of all supervisors' adherence to and performance under the Contractor's EEO policies and affirmative action obligations.

8. Contractors are encouraged to participate in voluntary associations which assist in fulfilling one or more of their affirmative action obligations (7a through p). The efforts of a contractor association, joint contractor-union, contractor-community, or other similar group of which the contractor is a member and participant, may be asserted as fulfilling any one or more of its obligations under 7a through p of these Specifications provided that the contractor actively participates in the group, makes every effort to assure that the group has a positive impact on the employment of minorities and women in the industry, ensures that the concrete benefits of the program are reflected in the Contractor's minority and female workforce participation, makes a good faith effort to meet its individual goals and timetables and can provide access to documentation which demonstrates the effectiveness of actions taken on behalf of the Contractor. The obligation to comply, however, is the Contractor's and failure of such a group to fulfill an obligation shall not be a defense for the Contractor's noncompliance.

9. Goals for women have been established. However, the Contractor IS required to provide equal employment opportunity and to take affirmative action for all minority groups, both male and female and all women, both minority and non-minority. Consequently, the Contractor may be in violation of the Executive Order if a particular group is employed in a substantially disparate manner, that is even thought the Contractor has achieved its goals for women, the Contractor may be in violation of the Executive Order if a specific minority group of women is underutilized.

10. The Contractor shall not use the goals and timetables or affirmative action standards to discriminate against any person because of race, color, religion, sex or nation origin.

11. The Contractor shall not enter into any Subcontract with any person or firm debarred from Government contracts pursuant to Executive Order 11246.

12. The Contractor shall carry out such sanctions and penalties for violation of these specifications and the Equal Opportunity Clause, including suspension, termination and cancellation of existing subcontracts as may be imposed or ordered pursuant to Executive Order 11246, as amended, and its implementing regulations by the Office of Federal Contract Compliance Programs. Any Contractor who fails to carry out

such sanctions and penalties shall be in violation of these specifications and Executive Order 11246. as amended.

13. The Contractor, in fulfilling its obligations under these specifications shall implement specific affirmative action steps, at least as extensive as those standards prescribed in paragraph 7 of these specifications, so as to achieve maximum results from Its efforts to ensure equal employment opportunity. If the Contractor fails to comply with the requirements of the Executive Order, the implementing regulations, or these specifications, the Director will proceed in accordance with 41 CFR 60-4.8.

14. The Contractor shall designate and make known to the Department a responsible official as the EEO Officer to monitor all employment related activity, to ensure that the company EEO policy is being carried out, to submit reports relating to the provisions hereof as may be required by the Government and to keep records. Records shall at least include for each employee the name, address, telephone numbers, construction trade, union affiliation if any, employee identification number when assigned, social security number, race, sex, status (e.g., mechanic, apprentice, trainee, helper, or laborer), dates of changes in status, hours worked per week in the indicated trade, rate of pay, and locations at which the work was performed. Records shall be maintained in an easily understandable and retrievable form; however, to the degree that existing records satisfy this requirement, Contractors will not be required to maintain separate records.

15. Nothing herein provided shall be construed as a limitation upon the application of other laws which establish different standards of compliance or upon the application of requirements for the hiring of local or other area residents (e.g., those under the Public Works Employment Act of 1977 and the Community Development Block Grant Program).

ATTACHMENT A

Economic Area	Goal (Percent)
Virginia:	
021 Roanoke-Lynchburg, VA	
SMSA Counties:	
4640 Lynchburg, VA	19.3
VA Amherst; VA Appomattox; VA Campbell; VA Lynchburg	
6800 Roanoke, VA	10.2
VA Botetourt; VA Craig; VA Roanoke; VA Roanoke City; VA Salem	
Non-SMSA Counties	12.0
VA Alleghany; VA Augusta; VA Bath; VA Bedford; VA Bland; VA Carroll; VA Floyd; VA Franklin; VA Giles; VA Grayson; VA Henry; VA Highland; VA Montgomery; VA Nelson; VA Patrick; VA Pittsylvania; VA Pulaski; VA Rockbridge; VA Rockingham; VA Wythe; VA Bedford City; VA Buena Vista: VA Clifton Forge; VA Covington; VA Danville; VA Galax; VA Harrisonburg; VA Lexington; VA Martinsville; VA Radford; VA Staunton; VA Waynesboro; WV Pendleton.	
022 Richmond, VA	
SMSA Counties:	
6140 Petersburg - Colonial Heights - Hopewell, VA	30.6
VA Dinwiddie; VA Prince George; VA Colonial Heights; VA Hopewell; VA Petersburg.	
6760 Richmond, VA	24.9
VA Charles City; VA Chesterfield; VA Goochland, VA Hanover; VA Henrico; VA New Kent; VA Powhatan; VA Richmond.	
Non-SMSA Counties	27.9
VA Albemarle; VA Amelia; VA Brunswick; VA Buckingham, VA Caroline; VA Charlotte; VA Cumberland; VA Essex; VA Fluvanna; VA Greene; VA	

Greensville; VA Halifax; VA King and Queen; VA King William; VA Lancaster; VA Louisa; VA Lunenburg; VA Madison; VA Mecklenburg; VA Northumberland; VA Nottoway; VA Orange; VA Prince Edward; VA Richmond VA Sussex; VA Charlottesville; VA Emporia; VA South Boston

023 Norfolk - Virginia Beach - Newport News VA:

SMSA Counties:

5680 Newport News- Hampton, VA 27.1

VA Gloucester; VA James City; VA York; VA Hampton; VA Newport News; VA Williamsburg.

5720 Norfolk - Virginia Beach - Portsmouth, VA - NC 26.6

NC Currituck; VA Chesapeake; VA Norfolk; VA Portsmouth; VA Suffolk; VA Virginia Beach.

Non-SMSA Counties 29.7

NC Bertie; NC Camden; NC Chowan; NC Gates; NC Hertford; NC Pasquotank; NC Perquimans; VA lsle of Wight; VA Matthews; VA Middlesex; VA Southampton; VA Surry; VA Franklin.

Washington, DC:

020 Washington, DC.

SMSA Counties:

8840 Washington, DC - MD - VA 28.0

DC District of Columbia; MD Charles; MD Montgomery MD Prince Georges; VA Arlington; VA Fairfax; VA Loudoun; VA Prince William VA Alexandria; VA Fairfax City; VA Falls Church.

Non- SMSA Counties 25.2

MD Calvert; MD Frederick; MD St. Marys: MD Washington; VA Clarke; VA Culpeper; VA Fauquier; VA Frederick; VA King George; VA Page; VA Rappahannock; VA Shenandoah; VA Spotsylvania; VA Stafford; VA Warren: VA Westmoreland; VA Fredericksburg; VA Winchester WV Berkeley; WV Grant; WV Hampshire; WV Hardy; WV Jefferson; WV Morgan.

Tennessee:

052 Johnson City - Kingsport - Bristol, TN - VA

SMSA Counties:

3630 Johnson City - Kingsport -Bristol, TN-VA 2.6

TN Carter; TN Hawkins; TN Sullivan; TN Washington; VA Scott: VA Washington; VA Bristol.

Non-SMSA Counties 3.2

TN Greene; TN Johnson; VA Buchanan; VA Dickenson; VA Lee; VA Russell; VA Smyth; VA Tazewell; VA Wise; VA Norton; WV McDowell; WV Mercer.

Maryland:

019 Baltimore MD

Non-SMSA Counties 23.6

MD Caroline; MD Dorchester; MD Kent; MD Queen Annes; MD Somerset; MD Talbot; MD Wicomico; MD Worchester; VA Accomack; VA Northampton.

VIRGINIA DEPARTMENT OF TRANSPORTATION
2007 ROAD AND BRIDGE SUPPLEMENTAL SPECIFICATIONS

SUPPLEMENTAL DIVISION I—GENERAL PROVISIONS

SECTION 101—DEFINITIONS OF ABBREVIATIONS, ACRONYMS, AND TERMS

Section 101.02—Terms of the Specifications is amended to replace the definition for **Notice to Proceed** with the following:

> **Notice to Proceed.** A date selected by the Contractor that is no earlier than 15 nor later than 30 calendar days after the date of contract execution on which the Contractor intends to begin the work, or a contract specific date on which the Contractor may begin the work identified as the Notice to Proceed date in the Contract Documents.

Section 101.02—Terms of the Specifications is amended to add the following:

> **Storm Sewer System -** A drainage system consisting of a series of at least two interconnecting pipes and structures (minimum of two drop inlets, manholes, junction boxes, etc.) designed to intercept and convey stormwater runoff from a specific storm event without surcharge.

SECTION 102—BIDDING REQUIREMENTS AND CONDITIONS

Section 102.01—Prequalification of Bidders of the Specifications is amended to replace the first paragraph of (a) with the following:

> All prospective Bidders, including all members of a joint venture, must prequalify with the Department and shall have received a certification of qualification in accordance with the Rules Governing Prequalification Privileges prior to bidding. These rules and regulations can be found within the Department's Rules Governing Prequalification Privileges via the Prequalification Application. This requirement may be waived by a project-specific provision in the bid proposal.
>
> All subcontractors must be prequalified prior to performing any work on the contract, except that prequalification will not be required for subcontractors only performing a service as defined by the Code of Virginia, or only performing work items noted in the proposal as "Specialty Items".
>
> In order to be eligible for DBE credit under Special Provision for Section 107.15, DBE federal-aid contract subcontractors must be VDOT prequalified and DMBE certified at the time of bid submission. The prequalification and certification status of a DBE may affect the award of the contract to the prime contractor and the award of the subcontract to the DBE at any point during the contract.

Section 102.04(c) **Notice of Alleged Ambiguities** of the Specifications is amended to replace the first paragraph with the following:

> If a word, phrase, clause, or any other portion of the proposal is alleged to be ambiguous, the Bidder shall submit to the State Contract Engineer a written notice of the alleged ambiguity not later than 10 days prior to the date of receipt of bids and request an interpretation thereof. This written notice shall be submitted via the CABB (Contractor Advertisement Bulletin Board) system located on the Construction website at www.VDOT.Virginia.gov. Authorized interpretations will be issued by the State Contract Engineer to each person who received a proposal and will be posted on the CABB system.

Section 102.11— eVA Business-To-Government Vendor Registration of the Specifications is replaced with the following:

Bidders are not required to be registered with "eVA Internet e-procurement solution" at the time bids are submitted, however, prior to award, the lowest responsive and responsible bidder must be registered with “eVA Internet e-procurement solution” or the bid will be rejected. Registration shall be performed by accessing the eVA website portal www.eva.state.va.us, following the instructions and complying with the requirements therein.

When registering with eVa it is the bidder’s responsibility to enter or have entered their correct PA type address or addresses in eVa in order to receive payments on any contracts that the Department (VDOT) may award to them as the lowest responsive and responsible bidder. The Bidder shall also ensure their prequalification address(es) match those registered with eVa. Failure on the part of the bidder or Contractor to meet either of these requirements may result in late payment of monthly estimates.

SECTION 103—AWARD AND EXECUTION OF CONTRACTS

Section 103.01 - Consideration of Bids of the Specifications is amended to add the following:

The Department may, as part of its deliberations toward award of a contract, enter into a Memorandum of Understanding (MOU) with the apparent lowest responsive and responsible bidder if any of the following is determined to be necessary:

(a) Provide and document further clarification of a specification or drawing

(b) Establish an order of priority (ranking) where there are conflicting specification requirements

(c) Ensure proper understanding of the intent\meaning of a specification or drawing

(d) Document the inclusion of inadvertently excluded pages from the contract documents

(e) Document the correct unit of measurement where a conflict exists within the bid documents

(f) Document the elimination of an item(s)

(g) Limit the Department’s exposure to contract overruns or potential unbalancing of a bid item.

This listing is not to be interpreted as all inclusive, but is provided to give examples of the types of issues that may be addressed in such an agreement. The MOU is not intended to be used to negotiate “as bid” unit prices\quantities or to renegotiate bid requirements with the apparent lowest responsive and responsible bidder, but merely to address intent, clarify points of confusion or limit the possible future effects of such issues on project budget. If the terms of the MOU are acceptable to both parties, the Department and the apparent lowest responsive and responsible bidder will document their acceptance of the terms of the MOU by both parties’ signatures. In the case of Federal Oversight projects, FHWA concurrence also required. The MOU will be added to and become part of the executed contract.

SECTION 105—CONTROL OF WORK

Section 105.01—Notice to Proceed of the Specifications is replaced with the following:

Unless otherwise indicated in the Contract, the Notice to Proceed date will be the date selected by the Contractor on which the Contractor intends to begin the work. That date shall be no earlier than 15 nor later than 30 calendar days after the date of contract execution. The State Contract Engineer will

contact the Contractor on the date of contract execution to inform him that the contract has been executed. The State Contract Engineer will also confirm this date in the Letter of Contract Execution. Copies of the Letter of Contract Execution will be distributed to Department personnel involved in the administration of the Contract and to the Contractor. Within 10 calendar days after the date of contract execution the Contractor shall submit to the Engineer written notice of the date he has selected as his Notice to Proceed date. If the Contractor fails to provide written notice of his selected Notice to Proceed Date within 10 calendar days of contract execution, the selected Notice to Proceed Date will become the date 15 calendar days after the date of contract execution. The Contractor shall begin work no later than 10 calendar days after the date he has selected as his Notice to Proceed date, unless the Notice to Proceed date is otherwise indicated in the Contract, in which case the Contractor shall begin work within 10 calendar days after the specific Notice to Proceed date indicated in the Contract.

Contract Time will commence on the date of the Notice to Proceed. The Letter of Contract Execution will identify the Chief Engineer's authorized representative, hereafter referred to as the Engineer, who is responsible for written directives and changes to the Contract. The Engineer will contact the Contractor after notice of award to arrange a pre-construction conference.

In the event the Contractor, for matters of his convenience, wishes to begin work earlier than 15 calendar days or later than 30 calendar days after the date of contract execution, he shall make such a request in writing to the Engineer within 10 calendar days of the date of contract execution or once a Notice to Proceed Date has been established, if he wishes to begin work more than 10 calendar days after his selected Notice to Proceed date or the Notice to Proceed Date indicated in the Contract, he shall make such a request to the Engineer in writing no later than 5 calendar days after the Notice to Proceed date. If this requested start date is acceptable to the Department, the Contractor will be notified in writing; however, the Contract fixed completion date will not be adjusted but will remain binding. The Contractor's request to adjust the start date for the work on the Contract will not be considered as a basis for claim that the time resulting from the Contractor's adjusted start date, if accepted by the Engineer, is insufficient to accomplish the work nor shall it relieve the Contractor of his responsibility to perform the work in accordance with the scope of work and requirements of the Contract. In no case shall work begin before the Department executes the Contract or prior to the Notice to Proceed date unless otherwise permitted by the Contract or authorized by the Engineer. The Contractor shall notify the Engineer at least 24 hours prior to the date on which he will begin the work.

Section 105.02—Pre-Construction Conference of the Specifications is amended to replace the first paragraph with the following:

After notification of award and prior to the Notice to Proceed date the Contractor shall attend a pre-construction conference scheduled by the Engineer to discuss the Contractor's planned operations for prosecuting and completing the work within the time limit of the Contract. At the pre-construction conference the Engineer and the Contractor will identify in writing the authorities and responsibilities of project personnel for each party. The pre-construction conference may be held simultaneously with the scheduling conference when the Engineer so indicates this in advance to the Contractor. When these are simultaneously held, the Contractor shall come prepared to discuss preparation and submittal details of the progress schedule in accordance with the requirements of the Contract.

Section 105.10(c)(1)**—Steel Structures** of the Specifications is replaced with the following:

Working drawings for steel structures, including metal handrails, shall consist of shop detail, erection, and other working drawings showing details, dimensions, sizes of units, and other information necessary for the fabrication and erection of metal work.

Section 105.14—Maintenance During Construction of the Specifications is amended to add the following:

The Contractor shall provide at least one person on the project site during all work operations who is currently verified either by the Department in Intermediate Work Zone Traffic Control, or by the

American Traffic Safety Services Association (ATSSA) as a Traffic Control Supervisor (TCS). This person must have the verification card with them while on the project site. This person shall be responsible for the oversight of work zone traffic control within the project limits in compliance with the contract requirements involving the plans, specifications, the VWAPM, and the MUTCD. This person's duties shall include the supervision of the installation, adjustment (if necessary), inspection, maintenance and removal when no longer required of all traffic control devices on the project.

If none of the Contractor's on-site personnel responsible for the supervision of such work has the required verification with them or if they have an outdated verification card showing they are not currently verified either by the Department in Intermediate Work Zone Traffic Control, or by the American Traffic Safety Services Association (ATSSA) as a Traffic Control Supervisor (TCS) all work on the project will be suspended by the Engineer.

The Contractor shall provide at least one person on site who is, at a minimum, verified by the Department in Basic Work Zone Traffic Control for each construction and\or maintenance operation that involves installing, maintaining, or removing work zone traffic control devices. This person shall be responsible for the placement, maintenance and removal of work zone traffic control devices.

In the event none of the Contractor's on-site personnel of any construction/maintenance operation has, at a minimum, the required verification by the Department in Basic Work Zone Traffic Control, that construction/maintenance operation will be suspended by the Engineer until that operation is appropriately staffed in accordance with the requirements herein.

Section 105.15(b) **Mailboxes and Newspaper Boxes** of the Specifications is replaced with the following:

(b) **Mailboxes and Newspaper Boxes:** When removal of existing mailboxes and newspaper boxes is made necessary by construction operations, the Contractor shall place them in temporary locations so that access to them will not be impaired. Prior to final acceptance, boxes shall be placed in their permanent locations as designated by the Engineer and left in as good condition as when found. Boxes or their supports that are damaged through negligence on the part of the Contractor shall be replaced at his expense. The cost of removing and resetting existing boxes shall be included in other pay items of the Contract. New mailboxes designated in the plans shall be paid for in accordance with the provisions of Section 521 of the Specifications.

SECTION 107—LEGAL RESPONSIBILITIES

Section 107.02—Permits, Certificates, and Licenses of the Specifications is amended to replace (f) with the following:

(f) **Virginia Department of Conservation and Recreation – Virginia Stormwater Management Program General Permit For Discharge of Stormwater From Construction Activities (VSMP Construction Permit**): All construction activities undertaken by or for VDOT must be covered by the VSMP Construction Permit. According to IIM-LD-242 and Section 107.16, VDOT is responsible for securing VSMP Construction Permit coverage for all applicable land disturbing activities performed on VDOT rights of way or easements, including off-site support facilities that are located on VDOT rights of way or easements that directly relate to the construction site. The Contractor shall be responsible for securing VSMP Construction Permit coverage for support facilities that are not located on VDOT rights of way or easements.

The Contractor shall be responsible for all costs to obtain VSMP Construction Permit coverage for all support facilities not included in the construction plans for the project. The Department will not be responsible for any inconvenience, delay, or loss experienced by the Contractor as a result of his failure to gain access to any support facility areas at the time contemplated.

Section 107.13—Labor and Wages of the Specifications is amended to add the following:

(c) **Job Service Offices:** In advance of the Contract starting date, the Contactor may contact the Job Service Office of the Virginia Employment Commission at the nearest location to secure referral of available qualified workers in all occupational categories. The closest office may be obtained by accessing the VEC website at http://www.vec.virginia.gov/vec-local-offices.

Section 107.14(f) **Training** of the Specifications is amended to replace 5 and 6 with the following:

5. If the Contract provides a pay item for trainees, training shall be in accordance with the requirements of Section 518 of the Specifications.

Section 107.16(a) **Erosion and Siltation** of the Specifications is amended to replace the fourth paragraph with the following:

For projects that disturb 10,000 square feet or greater of land or 2,500 square feet or greater in Tidewater, Virginia, the Contractor shall have within the limits of the project during land disturbance activities, an employee certified by the Department in Erosion and Sediment control who shall inspect erosion and siltation control devices and measures for proper installation and operation and promptly report their findings to the Inspector. Inspections shall include all areas of the site disturbed by construction activity and all off site support facilities covered by the project's Stormwater Pollution Prevention Plan. Inspections shall be conducted at least once every 14 calendar days and within 48 hours following any runoff producing storm event (Note: If an inspection is conducted as a result of a storm event, another inspection is not required for 14 calendar days following provided there are no more runoff producing storm events during the that period). For those areas that have been temporarily stabilized or runoff is unlikely to occur due to winter conditions (e.g., the site is covered with snow or ice or frozen ground exists), inspections shall be conducted at least once a month. Those definable areas where final stabilization has been achieved will not require further inspections provided such areas have been identified in the project's Stormwater Pollution Prevention Plan. Failure of the Contractor to maintain a certified employee within the limits of the project will result in the Engineer suspending work related to any land disturbing activity until such time as a certified employee is present on the project. Failure on the part of the Contractor to maintain appropriate erosion and siltation control devices in a functioning condition may result in the Engineer notifying the Contractor in writing of specific deficiencies. Deficiencies shall be corrected immediately. If the Contractor fails to correct or take appropriate actions to correct the specified deficiencies within 24 hours after receipt of such notification, the Department may do one or more of the following: require the Contractor to suspend work in other areas and concentrate efforts towards correcting the specified deficiencies, withhold payment of monthly progress estimates, or proceed to correct the specified deficiencies and deduct the entire cost of such work from monies due the Contractor. Failure on the part of the Contractor to maintain a Department certified erosion and sediment control employee within the project limits when land disturbance activities are being performed will result in the Engineer suspending work related to any land disturbance activity until such time as the Contractor is in compliance with this requirement.

Section 107.16(e) **Storm Water Pollution Prevention Plan** of the Specifications is replaced with the following:

(e) **Storm Water Pollution Prevention Plan and Virginia Stormwater Management Program General Permit for the Discharge of Stormwater from Construction Activities**

A Stormwater Pollution Prevention Plan (SWPP) identifies potential sources of pollutants which may reasonably be expected to affect the stormwater discharges from the construction site and any on-site or off-site support facilities located on VDOT rights of way and easements. The SWPPP also describes and ensures implementation of practices which will be used to reduce pollutants in such discharges.

The SWPPP shall include, but not be limited to, the approved Erosion and Sediment Control (ESC) Plan, the approved Stormwater Management (SWM) Plan and related Specifications and Standards contained within all contract documents and shall be required for all land-disturbing activities that disturb 10,000 square feet or greater, or 2,500 square feet or greater in Tidewater, Virginia.

Land-disturbing activities that disturb one acre or greater, or 2,500 square feet or greater in an area designated as a Chesapeake Bay Preservation Area, require coverage under the Department of Conservation and Recreation's Virginia Stormwater Management Program (VSMP) General Permit for the Discharge of Stormwater from Construction Activities (hereafter referred to as the VSMP Construction Permit). According to IIM-LD-242, VDOT will apply for and secure VSMP Construction Permit coverage for all applicable land disturbing activities on VDOT rights of way or easements for which it has contractual control, including off-site (outside the project limits) support facilities on VDOT rights of way or easements that directly relate to the construction site.

The Contractor shall be responsible for securing VSMP Construction Permit coverage for all support facilities that are not located on VDOT rights of way or easements.

The required contents of a SWPPP for those land disturbance activities requiring coverage under the VSMP Construction Permit are found in Section II D of the General Permit section of the VSMP Regulations (4VAC50-60-1170). While a SWPPP is an important component of the VSMP Construction Permit, it is only one of the many requirements that must be addressed in order to be in full compliance with the conditions of the permit.

The Contractor and all other persons that oversee or perform activities covered by the VSMP Construction Permit shall be responsible for reading, understanding, and complying with all of the terms, conditions and requirements of the permit and the project's SWPPP including, but not limited to, the following:

1. Project Implementation Responsibilities

   The Contractor shall be responsible for the installation, maintenance, inspection, and, on a daily basis, ensuring the functionality of all erosion and sediment control measures and all other stormwater and pollutant runoff control measures identified within or referenced within the SWPPP, plans, Specifications, permits, and other contract documents.

   The Contractor shall be responsible for the temporary erosion and sediment control protection and permanent stabilization of all offsite borrow areas and soil disposal areas located outside of VDOT right of way or easement.

   The Contractor shall take all reasonable steps to prevent or minimize any stormwater or non-stormwater discharge that will have a reasonable likelihood of adversely affecting human health or public and/or private properties.

2. Certification Requirements

   In addition to satisfying the personnel certification requirements contained herein, the Contractor shall certify his activities by completing, signing, and submitting Form C-45 VDOT SWPPP Contractor and Subcontractor Certification Statement to the Engineer at least 7 days prior to commencing any project related land-disturbing activities, both within the project limits and any support facilities located on VDOT rights of way or easements.

3. 3. SWPPP Requirements for Support Facilities

   VDOT will secure VSMP Construction Permit coverage for support facilities located on VDOT rights of way or easements according to IIM-LD-242, The Contractor shall be responsible for

securing separate VSMP Construction Permit coverage for support facilities that are not located on VDOT rights of way or easements.

Support facilities shall include, but not be limited to, borrow and disposal areas, construction and waste material storage areas, equipment and vehicle storage and fueling areas, storage areas for fertilizers or chemicals, sanitary waste facilities and any other areas that may generate a stormwater or non-stormwater discharge directly related to the construction site.

Support Facilities located on VDOT rights of way or easements:

a. For those support facilities located within the project limits but not included in the construction plans for the project, the Contractor shall develop the erosion and sediment control plan(s) according to IIM-LD-11, the stormwater management plan(s) (where applicable) according to IIM-LD-195 and the stormwater pollution prevention plan(s) according to IIM-LD-246, and submit the plans to the Engineer for review and approval. Once approved, the Engineer will notify the Contractor in writing that the plans are accepted as a component of the Project's SWPPP and VSMP Construction Permit coverage (where applicable) and shall be subject to all conditions and requirements of the VSMP Construction Permit and all other contract documents. No land disturbing activities can occur in the support area(s) until written notice to proceed is provided by the Engineer.

b. For support facilities located outside the project limits and not included in the construction plans for the project, the Contractor shall develop the erosion and sediment control plan(s) according to IIM-LD-11, the stormwater management plan(s) (where applicable) according to IIM-LD-195, the stormwater pollution prevention plan(s) according to IIM-LD-246 and all necessary documents for obtaining VSMP Construction permit coverage according to IIM-LD-242, and submit the plans and documents to the Engineer for review and approval. Once approved by the Engineer, VDOT will secure VSMP Construction Permit coverage according to IIM-LD-242. After VDOT secures VSMP Construction Permit coverage for the support facility, the Engineer will notify the Contractor in writing. The support facility shall be subject to all conditions and requirements of the VSMP Construction Permit and all other contract documents. . No land disturbing activities can occur in the support area(s) until written notice to proceed is provided by the Engineer.

4. Reporting Procedures

a. Inspection Requirements

The Contractor shall be responsible for conducting inspections in accordance with the requirements herein. The Contractor shall document such inspections by completion of Form C-107 , Construction Runoff Control Inspection Form , in strict accordance with the directions contained within the form.

b. Unauthorized Discharge Requirements

The Contractor shall not discharge into state waters sewage, industrial wastes, other wastes or any noxious or deleterious substances nor shall otherwise alter the physical, chemical, or biological properties of such waters that render such waters detrimental for or to domestic use, industrial consumption, recreational or other public uses.

(1) Notification of non-compliant discharges

The Contractor shall immediately notify the Engineer upon the discovery of or potential of any unauthorized, unusual, extraordinary, or non-compliant discharge from the land disturbing activity. Where immediate notification is not possible, such notification shall be not later than 24 hours after said discovery.

(2) Detailed report requirements for non-compliant discharges

The Contractor shall submit to the Engineer within 5 days of the discovery of any actual or potential non-compliant discharge a written report describing details of the discharge to include its volume, location, cause, and any apparent or potential effects on private and/or public properties and state waters or endangerment to public health, as well as steps being taken to eliminate the discharge. A completed Form C-107 (a) and (b) shall be included in such reports.

5. Changes, Deficiencies and Revisions

a. Changes and Deficiencies

The Contractor shall report to the Engineer when any planned physical alterations or additions are made to the land disturbing activity or deficiencies in the project plans or contract documents are discovered that could significantly change the nature or increase the quantity of the pollutants discharged from the land disturbing activity to surface waters.

b. Revisions to the SWPPP

Where site conditions, construction sequencing or scheduling necessitates revisions or modifications to the erosion and sediment control plan or any other component of the SWPPP for the land disturbing activity, such revisions or modifications shall be approved by the Engineer and shall be documented by the Contractor on a designated plan set (Record Set) according to IIM-LD-246.

Such plans shall be maintained on the project site or at a location convenient to the project site where no on site facilities are available and shall be available for review upon request during normal business working hours.

Section 107.21—Size and Weight Limitations of the Specifications is amended to add the following:

(d) **Construction Loading of Structures** - In the construction, reconstruction, widening, or repair of bridge, culvert, retaining wall and other similar type structures including approaches, the Contractor shall consider construction loads during the planning and prosecution of the work. If the loading capacity of these type structure(s) is not shown in the contract documents, the Contractor is responsible for contacting the office of the appropriate district bridge engineer to obtain the loading capacity information. Construction loads include but are not limited to the weight of cranes, trucks, other heavy construction or material delivery equipment, as well as the delivery or storage of materials placed on or adjacent to the structure or parts thereof during the various stages (phases) of the work in accordance with the Contractor's proposed work plan. The Contractor shall consider the effect(s) of construction loads on the loading capacity of these type structure(s) in his sequencing of the work and operations, including phase construction. At the Engineer's request the Contractor shall be prepared to discuss or review his proposed operations with the Engineer with regard to construction loads to demonstrate he has taken such into consideration in the planning and execution of the work.

SECTION 108—PROSECUTION AND PROGRESS OF WORK

Section 108.01—Prosecution of Work of the Specifications is amended to replace the first paragraph with the following:

The Contractor shall begin work on the Contract within 10 calendar days after the date selected by the Contractor as his Notice to Proceed date or within 10 calendar days after the specific Notice to Proceed

date indicated in the Contract, unless otherwise altered or amended by specific language in the Contract or as permitted by the provisions of Section 105.01 or Section 108.02 of the Specifications.

Section 108.02(b) **Holidays** of the Specifications is amended to include the following:

In addition to the Sunday or Holiday work limitations, mobile, short duration, short-term stationary, or intermediate-term stationary temporary traffic control zone (as defined in the *Virginia Work Area Protection Manual*) lane closures on mainline lanes, shoulders, or ramps shall not be performed during the following Holiday time periods without the written permission of the Engineer. Additionally, a long-term stationary temporary traffic control zone (as defined in the *Virginia Work Area Protection Manual*) shall not be initially put in place, adjusted, or removed during the following Holiday time periods without the written permission of the Engineer:

- **January 1**: From Noon on the preceding day until Noon on the following day, except as indicated below.
- **Easter**: As indicated below.
- **Memorial Day**: As indicated below.
- **July 4:** From Noon on the preceding day until Noon on the following day, except as indicated below.
- **Labor Day**: As indicated below.
- **Thanksgiving Day**: From Noon on the Wednesday preceding Thanksgiving Day until Noon on the Monday following Thanksgiving Day.
- **Christmas Day**: From Noon on the preceding day until Noon on the following day, except as indicated below.

If the Holiday occurs on a Friday or Saturday: From Noon on the preceding Thursday to Noon on the following Monday.

If the Holiday occurs on a Sunday or Monday: From Noon on the preceding Friday to Noon on the following Tuesday.

Section 108.04—Determination and Extension of Contract Time Limit of the Specifications is amended to replace the second paragraph with the following:

With a fixed date contract when contract execution is not within 60 calendar days after the opening of bids, or when the Contractor is unable to commence work because of any failure of the Department, or when the Contractor is delayed because of the fault of the Department, the Contractor will be given an extension of time based on the number of days delayed beyond the 60 calendar days. No time extension will be allowed for a delay in the date of contract execution when the delay is the fault of the Contractor.

Section 108.04(a) **Fixed Date** of the Specifications is amended to add the following after the first paragraph as currently written:

If the Contract identifies a contract-specific Notice to Proceed date and the Contract is not executed by that date, the Contractor will receive an extension of time equal to the number of days between the contract-specific Notice to Proceed date and the eventual date of contract execution. If the Notice to Proceed date is selected by the Contractor and after prior approval the Engineer directs the Contractor not to begin work on that date, the Contractor will receive an extension of time equal to the number of days between the Contractor's selected Notice to Proceed date and the eventual date the Engineer informs the Contractor that he may commence the work.

Section 108.07—Default of Contract of the Specifications is amended to replace condition (a) with the following:

(a) fails to begin the work under the Contract within 10 calendar days after the Contractor's selected Notice to Proceed date, or within 10 calendar days after a contract specific Notice to Proceed date indicated in the Contract, except as otherwise permitted by specific contract language or the provisions of Section 105.01 or Section 108.02 of the Specifications.

SECTION 109—MEASUREMENT AND PAYMENT

Section 109.01(a)**—Measurement by Weight** is amended to replace the first paragraph and second paragraph including subparagraphs 1-4 with the following:

(a) **Measurement by Weight:** Materials that are measured or proportioned by weight shall be weighted on accurate scales as specified in this Section. When material is paid for on a tonnage basis, personnel performing the weighing shall be certified by the Department and shall be bonded to the Commonwealth of Virginia in the amount of $10,000 for the faithful observance and performance of the duties of the weighperson required herein. The bond shall be executed on a form having the exact wording as the Weighpersons Surety Bond Form furnished by the Department and shall be submitted to the Department prior to the furnishing of the tonnage material.

The Contractor shall have the weighperson perform the following:

1. Furnish a signed weigh ticket for each load that shows the date, load number, plant name, size and type of material, project number, schedule or purchase order number, and the weights specified herein.

2. Maintain sufficient documentation so that the accumulative tonnage and distribution of each lot of material, by contract, can be readily identified.

3. Submit by the end of the next working day a summary of the number of loads and total weights for each type of material by contract.

Section 109.01(a)**—Measurement by Weight** is also amended to delete the third paragraph.

Section 109.01(d)4 **Asphalt** is amended to replace the "formula…used in computing the volume of asphalt at temperatures other than 60 degrees F" with the following:

$$V^1 = V \times [1 - K(T - 60)]$$

Section 109.08(b)**—Payment to Sub-Contractors** of the Specifications is amended to replace the second paragraph with the following:

Payment to Sub-Contractors shall be in accordance with the provisions of §2.2-4354 of the *Highway Laws of Virginia:*

The Contractor shall take one of the following two actions within 7 days after receipt of payment from the Department for the subcontractor's portion of the work as shown on the monthly progress estimate:

1. Pay the subcontractor for the proportionate share of the total payment received from the agency attributable to the work performed by the subcontractor under that contract; or

2. Notify the Department and subcontractor, in writing, of his intention to withhold all or a part of the subcontractor's payment with the reason for nonpayment.

The Contractor shall be obligated to pay interest in the amount 1 (one) percent per month on all amounts owed by the Contractor to the subcontractor that remain unpaid after 7 days following receipt by the contractor of payment from the Department for work performed by the subcontractor, except amounts withheld as allowed in section 2. The Contractor shall include in each of its subcontracts a provision requiring each subcontractor to include or otherwise be subject to the same payment and interest requirements with respect to each lower tier subcontractor.

Section 109.09—Payment For Material On Hand of the Specifications is replaced with the following:

When requested in writing by the Contractor, payment allowances may be made for material secured for use on the project. Such material payments will be for only those actual quantities identified in the contract, approved work orders, or otherwise **authorized and** documented **by the Engineer** as required to complete the project and shall be in accordance with the following terms and conditions:

(a) **Structural Steel or Reinforcing Steel:** An allowance of 100 percent of the cost to the Contractor for structural steel **or reinforcing steel** materials secured for fabrication not to exceed 60 percent of the contract price may be made when such material is delivered to the fabricator and has been adequately identified for exclusive use on the project. **The provisions of this section for steel reinforcement will only apply where the quantity of steel reinforcement is identified as a separate and distinct bid item for payment.** An allowance of 100 percent of the cost to the Contractor for superstructure units and reinforcing steel, not to exceed 90 percent of the contract price, may be made when fabrication is complete. Prior to the granting of such allowances, the materials and fabricated units shall have been tested or certified and found acceptable to the Department and shall have been stored in accordance with the requirements specified herein. Allowances will be based on invoices, bills, or the estimated value as approved by the Engineer and will be subject to the retainage requirements of Section 109.08 of the Specifications. **For the purposes of this section fabrication is defined as any manufacturing process such as bending, forming, welding, cutting or coating with paint or anti-corrosive materials which alters, converts, or changes raw material for its use in the permanent finished work.**

(b) **Other Materials**: For aggregate, pipe, guardrail, signs and sign assemblies, and other nonperishable material, an allowance of 100 percent of the cost to the Contractor for materials, not to exceed 90 percent of the contract price, may be made when such material is delivered **to the project** and stockpiled or stored in accordance with the requirements specified herein. Prior to the granting of such allowances, the material shall have been tested and found acceptable to the Department. Allowances will be based on invoices, bills, or the estimated value of the material as approved by the Engineer and will be subject to the retainage provisions of Section 109.08 of the Specifications.

(c) **Excluded Items:** No allowance will be made for fuels, form lumber, falsework, temporary structures, or other work that will not become an integral part of the finished construction. **Additionally, no allowance will be made for perishable material such as cement, seed, plants, or fertilizer.**

(d) **Storage:** Material for which payment allowance is requested shall be stored in an approved manner in areas where damage is not likely to occur. If any of the stored materials are lost or become damaged, the Contractor shall repair or replace them **at no additional cost to the Department**. **Repair or replacement of such material will not be considered the basis for any extension of contract time.** If payment allowance has been made prior to such damage or loss, the amount so allowed or a proportionate part thereof will be deducted from the next progress estimate payment and withheld until satisfactory repairs or replacement has been made.

When it is determined to be impractical to store materials within the limits of the project, the Engineer may approve storage on private property or, for structural units and reinforcing steel, on the manufacturer's or fabricator's yard. Requests for payment allowance for such **stored** material shall be accompanied by a release from the owner or tenant of such property or yard agreeing to permit the removal of the materials from the property without cost to the Commonwealth.

(e) **Materials Inventory**: If the Contractor requests a payment allowance for properly stored material, he shall submit a certified and itemized inventory statement to the Engineer no earlier than five days and no later than two days prior to the progress estimate date. The statement shall be submitted on forms furnished by the Department and shall be accompanied by **supplier's or manufacturer's** invoices or other documents that will verify the material's cost. Following the initial submission, the Contractor shall submit to the Engineer a monthly-certified update of the itemized inventory statement within the same time frame. The updated inventory statement shall show additional materials received and stored with invoices or other documents and shall list materials removed from storage since the last certified inventory statement, with appropriate cost data reflecting the change in the inventory. If the Contractor fails to submit the monthly-certified update within the specified time frame, the Engineer will deduct the full amount of the previous statement from the progress estimate.

At the conclusion of the project, the cost of material remaining in storage for which payment allowance has been made will be deducted from the progress estimate.

(**c211hg0**-1209) **POLISHING AGGREGATE IN ASPHALT CONCRETE** - **Section 211—Asphalt Concrete** of the Specifications is amended as follows:

Section 211.02—Materials is amended by replacing (e) with the following:

Fine or coarse aggregate that tend to polish under traffic will not be permitted in any final surface exposed to traffic except as permitted within the limits of Section 211.04(a) and (b) of the Specifications and as designated by the Engineer or as permitted elsewhere in these Specifications.

Section 211.04—Asphalt Concrete Mixtures is amended by replacing (a) and (b) with the following:

Asphalt concrete mixtures shall conform to the requirements of Table II-14 and the following:

(a) **Types SM-9.0A, SM-9.0D, SM-9.0E, SM-9.5A, SM-9.5D and SM-9.5E asphalt concrete** shall consist of crushed stone, crushed slag, or crushed gravel and fine aggregate, slag or stone screenings or a combination thereof combined with asphalt cement.

NOTE: For all surface mixes, except where otherwise noted, no more than 5 percent of all aggregate retained on the No. 4 sieve and no more than 20 percent of the total aggregate may be polish susceptible. At the discretion of the Engineer, a SM-9.5AL may be specified and polish susceptible aggregates may be used (without percentage limits).

(b) **Types SM-12.5A, SM-12.5D, SM-12.5E, IM-19.0A, IM-19.0D, and IM-19.0E asphalt concrete** shall consist of crushed stone, crushed slag, or crushed gravel and fine aggregate, slag or stone screenings or a combination thereof combined with asphalt cement.

NOTE: At the discretion of the Engineer, an intermediate mix may be designated as either a SM-19.0A or SM-19.0D. For SM-12.5 and SM-19.0 surface mixes, no more than 5 percent of the aggregate retained on the No. 4 sieve may be polish susceptible. All material passing the No. 4 sieve may be polish susceptible. No more than 35 percent of the total aggregate composition (polish and non-polish susceptible) shall be passing the No. 8 sieve. At the discretion of the Engineer, a SM-12.5AL may be specified and polish susceptible aggregates may be used (without percentage limits).

10-7-09 (SPCN)

VIRGINIA DEPARTMENT OF TRANSPORTATION
SPECIAL PROVISION FOR
CORROSION RESISTANT REINFORCING STEEL

January 24, 2012

SECTION 223—STEEL REINFORCEMENT of the Specifications is revised as follows:

223.02—Detail Requirements is amended to add the following

(e) **Corrosion Resistant Reinforcing Steel, Class I:** Steel shall conform to the requirements of ASTM A1035/A1035M – Standard Specification for Deformed and Plain, Low-carbon, Chromium, Steel Bars for Concrete Reinforcement; or shall conform to the requirements of ASTM A955/A955M – Standard Specification for Deformed and Plain, Solid Stainless Steel Bars for Concrete Reinforcement, UNS* Designation(s): S32101.

(f) **Corrosion Resistant Reinforcing Steel, Class II:** Steel shall conform to the requirements of AASHTO Designation: MP 13M/MP 13-04, Standard Specification for Stainless Steel Clad Deformed and Plain Round Steel Bars for Concrete Reinforcement; or shall conform to the requirements of ASTM A955/A955M - Standard and Specification for Deformed and Plain Solid Stainless Steel Bars for Concrete Reinforcement. UNS* Designations: S24100. Stainless steel clad bars may only be provided if they are domestically produced except for projects designated as experimental in the plans.

(g) **Corrosion Resistant Reinforcing Steel, Class III:** Steel shall conform to the requirements of ASTM A955/A955M - Standard Specification for Deformed and Plain Solid Stainless Steel Bars for Concrete Reinforcement. UNS* Designations: S24000, S30400, S31603, S31653, S31803, S32304.

* Unified Numbering System for Metals and Alloys

VIRGINIA DEPARTMENT OF TRANSPORTATION
2007 ROAD AND BRIDGE SUPPLEMENTAL SPECIFICATIONS

SUPPLEMENTAL SECTION 200—GENERAL

SECTION 200—GENERAL of the Specifications is amended as follows:

200.06-Technician and Batcher Certification is replaced with the following:

Certification for technicians and batchers will be awarded by the Department upon a candidate's satisfactory completion of an examination.

(a) **Central Mix Aggregate Technician:** A Central Mix Aggregate Technician designs and makes necessary adjustments in job mixtures at the plant based on an analysis of the specified material. The technician also samples materials and conducts any tests necessary to put the plant into operation and produce a mixture in accordance with the applicable Specifications.

(b) **Asphalt Plant Level I Technician:** An Asphalt Plant Level I Technician samples materials.

(c) **Asphalt Plant Level II Technician:** An Asphalt Plant Level II Technician samples material and is capable of conducting any tests necessary to put the plant into operation.

(d) **Concrete Plant Technician:** A Concrete Plant Technician performs necessary adjustments in the proportioning of material used to produce the specified concrete mixtures

(e) **Concrete Batcher:** A Concrete Batcher performs the batching operation. The batcher implements adjustments only at the direction of a certified Concrete Plant Technician unless the batcher's certification authorizes otherwise.

(f) **Asphalt Field Level I Technician:** An Asphalt Field Level I Technician provides quality control of the placement operations of Asphalt Concrete.

(g) **Asphalt Field Level II Technician:** An Asphalt Field Level II Technician inspects asphalt concrete placement in accordance with applicable requirements.

(h) **Concrete Field Technician:** A Concrete Field Technician provides quality control of placement operations for hydraulic cement concrete in accordance with applicable requirements.

(i) **Asphalt Mix Design Technician:** An Asphalt Mix Design Technician is responsible for designing and adjusting mixes as needed, reviewing and approving all test results, having direct communication with the plant for making recommended adjustments and is capable of conducting any tests necessary to put the plant into operation.

(j) **Aggregate Properties Technician:** An Aggregate Properties Technician conducts all aggregate tests on aggregate used in asphalt concrete in accordance with applicable requirements

(k) **Slurry Surfacing Technician:** A Slurry Surfacing Technician inspects the placement of emulsified asphalt slurry seal and latex modified emulsion treatment (Micro-surfacing) in accordance with applicable requirements.

(l) **Surface Treatment Technician:** A Surface Treatment Technician inspects the placement of single seal and modified (blotted) seal coats in accordance with applicable requirements.

VIRGINIA DEPARTMENT OF TRANSPORTATION
2007 ROAD AND BRIDGE SUPPLEMENTAL SPECIFICATIONS

SUPPLEMENTAL SECTION 207—SELECT MATERIAL

SECTION 207—SELECT MATERIAL of the Specifications is amended as follows:

Section 207.05—Acceptance of Select Material, Type I is amended to replace the second paragraph with the following:

Determination of gradation and Atterberg limits will be based on a mean of the results of tests performed on four samples taken in a stratified random manner from each lot. Lots of 2000 tons or 4000 tons may be used at the discretion of the Engineer when warranted by annual plant shipping quantity and past performance. If visual examination reveals that the material is obviously contaminated or segregated, the material will be rejected without additional sampling or testing. If it is necessary to determine the gradation and Atterberg limits of the material in an individual location, one sample taken from the material in question will be tested and the results will be compared to the job-mix formula with the tolerances specified in Table II-7 and Table II-8 for one test. The results obtained will apply only to the material in question.

VIRGINIA DEPARTMENT OF TRANSPORTATION
2007 ROAD AND BRIDGE SUPPLEMENTAL SPECIFICATIONS

SUPPLEMENTAL SECTION 208—SUBBASE AND AGGREGATE BASE MATERIAL

SECTION 208—SUBBASE AND AGGREGATE BASE MATERIAL of the Specifications is amended as follows:

Section 208.06—Acceptance is amended to replace the third paragraph with the following:

Determination of gradation and Atterberg limits will be based on a mean of the results of tests performed on four samples taken in a stratified random manner from each lot. Lots of 2000 tons or 4000 tons may be used at the discretion of the Engineer when warranted by annual plant shipping quantity and past performance. Samples shall be obtained by methods approved by the Engineer. Any statistically acceptable method of randomization may be used to determine the time and location of the stratified random sample to be taken. The Department shall be advised of the method to be used prior to the beginning of production.

VIRGINIA DEPARTMENT OF TRANSPORTATION
2007 ROAD AND BRIDGE SUPPLEMENTAL SPECIFICATIONS

SUPPLEMENTAL SECTION 211—ASPHALT CONCRETE

SECTION 211—ASPHALT CONCRETE of the Specifications is amended as follows:

Section 211.01—Description is replaced with the following:

Asphalt concrete shall consist of a combination of mineral aggregate and asphalt material mixed mechanically in a plant specifically designed for such purpose.

An equivalent single-axle load (ESAL) will be established by the Engineer, and SUPERPAVE mix types may be specified as one of the types listed as follows:

Mix Type	Equivalent Single-Axle Load (ESAL) Range (millions)	Minimum Asphalt Performance Grade (PG)[2]	Aggregate Nominal Maximum Size[1]
SM-9.0A	0 to 3	64-16	3/8 in
SM-9.0D	3 to 10	70-16	3/8 in
SM-9.0E	Above 10	76-22	3/8 in
SM-9.5A	0 to 3	64-16	3/8 in
SM-9.5D	3 to 10	70-16	3/8 in
SM-9.5E	Above 10	76-22	3/8 in
SM-12.5A	0 to 3	64-16	1/2 in
SM-12.5D	3 to 10	70-16	1/2 in
SM-12.5E	Above 10	76-22	1/2 in
IM-19.0A	Less than 10	64-16	3/4 in
IM-19.0D	10 to 20	70-16	3/4 in
IM-19.0E	20 and above	76-22	3/4 in
BM-25.0A	All ranges	64-16	1 in
BM-25.0D	Above 10	70-16	1 in

[1]**Nominal Maximum Size** is defined as one sieve size larger than the first sieve to retain more than 10 percent aggregate.

[2]**Minimum Asphalt Performance Grade (PG)** is defined as the minimum binder performance grade for the job mixes as determined by AASHTO T170 or AASHTO M320.

Asphalt concrete shall conform to the requirements for the mix type designated.

At the Contractor's option, an approved Warm Mix Asphalt (WMA) additive or process may be used to produce the asphalt concrete (AC) mix type designated.

Section 211.02(h) **antistripping additive** is replaced with the following:

An antistripping additive shall be used in all asphalt mixes. It may be hydrated lime or an approved chemical additive from the Department's approved list found in the Materials Division's Manual of Instructions, or a combination of both. The approved chemical additive shall be added at a rate of not less than 0.30 percent by weight of the total asphalt content of the mixture.

The mixture shall produce a tensile strength ratio (TSR) not less than 0.80 for the design and production tests. The TSR shall be determined in accordance with AASHTO T283, including a freeze-thaw cycle (4-inch specimens compacted with a Marshall Hammer or 3.5 by 6-inch specimens when compacted with a gyratory compactor); except that the 16-hour curing time requirement and the 72 to 96-hour storage period will be waived. Design tests shall use the same materials that are to be used in the production mix and shall be conducted in a laboratory approved by the Department.

When a chemical additive is used, it shall be added to the asphalt cement prior to introduction into the mix. Any chemical additive or particular concentration of chemical additive found to be harmful to the asphalt material or that changes the original asphalt binder performance grade (PG), shall not be used.

Section 211.02(j)1 is replaced with the following:

1. Asphalt surface, intermediate and base mixtures containing RAP should use the performance grade (PG) of asphalt cement as indicated in Table II-I4A, however, the choice of PG to use in the mix shall be the responsibility of the Contractor in order to meet the requirements of Section 211.01 of the Specifications.

Section 211.02—Materials is amended by adding the following:

(k) **Warm Mix Asphalt (WMA)** additives or processes shall be approved by the Department prior to use. Approved materials and processes shall be obtained from the Department's approved list which is included in the Materials Division's Manual of Instructions.

TABLE II-12A AGGREGATE PROPERTIES is amended to add **Mix Type IM-19.0E** as follows:

TABLE II-12A
Aggregate Properties

	Coarse Aggregate Properties				
	CAA		ASTM D4791		
Mix Type	1 fractured face	2 fractured faces	F & E "(5:1) % by weight	Fine Aggregate Properties SE	FAA
IM-19.0 E	95% min.	90% min.	10% max.[1]	45% min.	45% min.

TABLE II-13 ASPHALT CONCRETE MIXTURES: DESIGN RANGE is amended to add **Mix Type IM-19.0E** to IM-19.0 A,D as follows:

TABLE II-13
Asphalt Concrete Mixtures: Design Range[1]

	Percentage by Weight Passing Square Mesh Sieves										
Mix Type	2 in	1 1/2 in	1 in	3/4 in	1/2 in	3/8 in	No. 4	No. 8	No. 30	No. 50	No. 200
IM-19.0 A,D,**E**			100	90-100	90 max.	--	--	28-49			2-8

TABLE II-14 MIX DESIGN CRITERIA is replaced with the following:

TABLE II-14
Mix Design Criteria

Mix Type	VTM (%) Production (Note 1)	VFA (%) Design	VFA (%) Production (Note 2)	Min. VMA (%)	Fines/Asphalt Ratio (Note 3)	No. of Gyrations N Design
SM-9.0A Notes 1,2,3	2.0-5.0	75-80	70-85	16	0.6-1.3	65
SM-9.0D Notes 1,2,3	2.0-5.0	75-80	70-85	16	0.6-1.3	65
SM-9.0E Notes 1,2,3	2.0-5.0	75-80	70-85	16	0.6-1.3	65
SM-9.5A Notes 1,2,3	2.0-5.0	73-79	68-84	15	0.6-1.2	65
SM-9.5D Notes 1,2,3	2.0-5.0	73-79	68-84	15	0.6-1.2	65
SM-9.5E Notes 1,2,3	2.0-5.0	73-79	68-84	15	0.6-1.2	65
SM-12.5A Notes 1,2,3	2.0-5.0	70-78	65-83	14	0.6-1.2	65
SM-12.5D Notes 1,2,3	2.0-5.0	70-78	65-83	14	0.6-1.2	65
SM-12.5E Notes 1,2,3	2.0-5.0	70-78	65-83	14	0.6-1.2	65
IM-19.0A Notes 1,2,3	2.0-5.0	69-76	64-81	13	0.6-1.2	65
IM-19.0D Notes 1,2,3	2.0-5.0	69-76	64-81	13	0.6-1.2	65
IM-19.0E Notes 1,2,3	2.0-5.0	69-76	64-81	13	0.6-1.2	65
BM-25.0A Notes 2,3,4	1.0-4.0	67-87	67-92	12	0.6-1.3	65
BM-25.0D Notes 2,3,4	1.0-4.0	67-87	67-92	12	0.6-1.3	65

[1]SM = Surface Mixture; IM = Intermediate Mixture; BM = Base Mixture.
Note 1: Asphalt content should be selected at 4.0 % Air Voids,
Note 2: During production of an approved job mix, the VFA shall be controlled within these limits.
Note 3: Fines-asphalt ratio is based on effective asphalt content.
Note 4: Base mix shall be designed at 2.5% air voids. BM-25.0 A shall have a minimum asphalt content of 4.4% unless otherwise approved by the Engineer. BM-25.0D shall have a minimum asphalt content of 4.6% unless otherwise approved by the Engineer.

Section 211.03—Job-Mix Formula is amended to replace the first paragraph with the following:

The Contractor shall submit a job-mix formula for each mixture for the Engineer's approval through the "Producer Lab Analysis and Information Details" (PLAID) website. Paper copies of the job mix formula along with supporting documentation shall also be submitted to the Department. The job-mix formula shall be within the design range specified. The job-mix formula shall establish a single percentage of aggregate passing each required sieve, a single percentage of asphalt material to be added to the aggregate, a temperature at which the mixture is to be produced, and a temperature at which the mixture is to be compacted for SUPERPAVE testing in accordance with the requirements of AASHTO R35. Each approved job-mix formula shall remain in effect, provided the results of tests performed on material currently being produced consistently comply with the requirements of the job-mix formula for grading, asphalt content, temperature, and SUPERPAVE compaction results and the requirements of Section 315 of the Specifications.

Section 211.03—Job-Mix Formula is amended by deleting the second paragraph of (a).

Section 211.03—Job-Mix Formula is amended to replace (c) with the following:

(c) Three trial blends for gradation shall be run at one asphalt content.

Section 211.03—Job-Mix Formula is amended to replace (d)8 with the following:

8. For surface mixes, permeability test data shall be submitted in accordance with VTM 120 using either single point verification or the regression method for each surface mix having a different gradation. If the average of the permeability results from the single point verification method exceeds 150 x 10^{-5} cm/sec, or if the regression method predicts a permeability exceeding 150 x 10^{-5} cm/sec at 7.5% voids, the Contractor shall redesign the mixture to produce a permeability number less than 150 x 10^{-5} cm/sec.

Section 211.03—Job-Mix Formula is amended to replace (f) with the following:

(f) A determination will be made that any asphalt concrete mixture being produced conforms to the job-mix formula approved by the Department. The Department and Contractor will test the mixture using samples removed from production. The following tests will be conducted to determine the properties listed:

Property	Test
Asphalt content	VTM-102, (VTM-36 when approved)
Gradation	AASHTO T-30
SUPERPAVE properties	AASHTO R35
Asphalt cement material	AASHTO T316 or T-201

For Warm Mix Asphalt (WMA), SUPERPAVE properties will be determined by the Department and Contractor based on the mix designation in Section 211.03(d)6 of the Specifications.

The Department will perform rut testing in accordance with the procedures detailed in VTM-110. If the results of the rut testing do not conform to the following requirements, the Engineer reserves the right to require adjustments to the job-mix formula:

Mix Designation	Maximum Rut Depth, mm
A	7.0
D	5.5
E, (S)	3.5

After calibration of the gyratory compactor is completed, adjustments to the job-mix formula may be required by the Engineer.

In the event the Department determines that the mixture being produced does not conform to the approved job-mix formula and volumetric properties specified in Table II-14 based on the Department's or Contractor's test results, the Contractor shall immediately make corrections to bring the mixture into conformance with the approved job-mix formula or cease paving with that mixture.

Subsequent paving operations using either a revised or other job-mix formula that has not been verified as described herein shall be limited to a test run of 100 to 300 tons of mixture if such material is to be placed in Department project work. No further paving for the Department using that specific mixture shall occur until the acceptability of the mixture being produced has been verified using the 100 to 300 ton constraint.

TABLE II-14A
Recommended Performance Grade of Asphalt Cement

Mix Type	Percentage of Reclaimed Asphalt Pavement (RAP) in Mix		
	%RAP ≤ 25.0%	**25.0% < %RAP ≤ 30%**	**25.0% < %RAP ≤ 35%**
SM-4.75A, SM-9.0A, SM-9.5A, SM-12.5A	PG 64-22	PG 64-22	
SM-4.75D, SM-9.0D, SM-9.5D, SM-12.5D	PG 70-22	PG 64-22	
IM-19.0A	PG 64-22	PG 64-22	
IM-19.0D	PG 70-22	PG 64-22	
BM-25.0A	PG 64-22		PG 64-22
BM-25.0D	PG 70-22		PG 64-22

Based on rut testing performed by the Department and/or field performance of the job mix, the Engineer reserves the right to require adjustments to the job-mix formula.

Section 211.04—Asphalt Concrete Mixtures is amended by replacing (b) with the following:

(b) **Types IM-19.0A, IM-19.0D, and IM-19.0E asphalt concrete** shall consist of crushed stone, crushed slag, or crushed gravel and fine aggregate, slag or stone screenings, or a combination thereof combined with asphalt cement.

NOTE: At the discretion of the Engineer, an intermediate mix may be designated as either SM-19.0A, SM-19.0D or SM-19.0E. When designated as such, no more than 5 percent of the aggregate retained on the No. 4 sieve may be polish susceptible. All material passing the No. 4 sieve may be polish susceptible.

Section 211.04—Asphalt Concrete Mixtures is amended to replace (e) with the following:

(e) **Type SM-9.5, SM-12.5, IM-19.0 and BM-25.0 asphalt concrete** may be designated E (polymer modified), or stabilized (S). Asphalt concrete mixtures with the E designation may not be stabilized.

1. **Type E asphalt mixtures** shall consist of mixes incorporating a neat asphalt material with polymer modification complying with the requirements of PG 76-22 and have a rolling thin film oven test residue elastic recovery at 77 degrees F of a minimum of 70 percent when tested in accordance with ASTM D 6084 procedure A. E designated mixtures shall not contain more than 15 percent reclaimed asphalt pavement (RAP) material.

2. **Type (S) asphalt mixtures** shall consist of mixes incorporating a stabilizing additive from the Department's approved list found in the Materials Division's Manual of Instructions. These mixes shall be designated with an (S) following the standard mix designation. The minimum required additive shall be as specified on the Department's approved list found in the Materials Division's Manual of Instructions.

3. **Type L asphalt mixtures** will be allowed to contain a 100 percent polishing coarse and fine aggregate. These mixes shall be designated with a L following the standard mix designation.

Section 211.05—Testing is amended to replace the second paragraph with the following:

The Contractor shall have a Department-certified Asphalt Mix Design Technician for designing and adjusting mixes as necessary. The Asphalt Mix Design Technician or Asphalt Plant Level II Technician may perform testing of asphalt mixes. The Asphalt Mix Design Technician shall be responsible for reviewing and approving the results of all testing. The Asphalt Mix Design Technician shall be available and have direct communication with the plant for making necessary adjustments in the asphalt concrete mixes at the mixing plant. The Asphalt Mix Design Technician and Asphalt Plant Level II Technician shall each be capable of conducting any tests necessary to put the plant into operation; however, the Asphalt Mix Design Technician shall be responsible for producing a mixture that complies with the requirements of these Specifications. The Department will award certification.

Section 211.05—Testing is amended to delete the last sentence of the last paragraph.

Section 211.06—Tests is replaced with the following:

The Department may sample materials entering into the composition of the asphalt concrete, the mixture, or the completed pavement. The Contractor shall cooperate with the Engineer in obtaining these samples. When samples are obtained from the pavement, the resulting voids shall be filled and refinished by the Contractor without additional compensation.

Abson recovery samples shall be PG graded according to the requirements of AASHTO M 320-05. Samples meeting the required grades specified in Section 211.01 of the Specifications shall be acceptable.

When the Department performs PG grading on the asphalt in a Contractor's liquid asphalt storage tank, the Engineer will notify the asphalt concrete producer and binder supplier if tests indicate that the binder properties of the asphalt material differ from those of the approved job-mix. The asphalt concrete producer and binder supplier shall determine corrective action with the approval of the Engineer.

Section 211.08—Acceptance is amended to replace the first paragraph with the following:

Acceptance will be made under the Department's quality assurance program, which includes the testing of production samples by the Contractor and of monitor samples by the Department. Sampling and testing for the determination of grading, asphalt cement content, and temperature shall be performed by the Contractor, and the Department will perform independent monitor checks at a laboratory of its choosing. The Contractor shall input such test results within 24 hours of sampling to the Department through the "Producer Lab Analysis and Information Details" (PLAID) website https://plaid.vdot.virginia.gov, unless otherwise approved by the Materials Engineer. Where the Contractor's test results indicate that the mixture conforms to the gradation, asphalt cement content, and mix temperature requirements of the Specifications, the mixture will be acceptable for these properties; however, nothing herein shall be construed as waiving the requirements of Section 106.06, Section 200.02, Section 200.03, and Section 315 of the Specifications or relieving the Contractor of the obligation to furnish and install a finished functional product that conforms to the requirements of the Contract. In the event a statistical comparative analysis of the Contractor's test results and the Department's monitor tests indicate a statistically significant difference in the results and either of the results indicates that the material does not conform to the grading and asphalt cement content requirements of the Specifications, an investigation will be made to determine the reason for the difference. In the event it is determined from the investigation that the material does not conform to the requirements of the Contract, price adjustments will be made in accordance with the requirements of Section 211.09 of the Specifications.

Section 211.08—Acceptance is amended to replace the second paragraph with the following:

Acceptance for gradation and asphalt cement content will be based on the mean of results of eight tests performed on samples taken in a stratified random manner from each 4,000-ton lot (8,000-ton lots may be used when the normal daily production of the source from which the material is being obtained is in excess of 4,000 tons). Unless otherwise approved by the Engineer, samples shall be obtained from the approximate center of the truckload of material. Any statistically acceptable method of randomization may be used to determine when to take the stratified random sample; however, the Department shall be advised of the method to be used prior to the beginning of production.

Section 211.08—Acceptance is amended to replace the third sentence of the fourth paragraph with the following:

The maximum temperature as recommended by the supplier shall not be exceeded for a mix designated E or (S).

Table II-15 PROCESS TOLERANCE is replaced with the following:

TABLE II-15
Process Tolerance

Tolerance on Each Laboratory Sieve and Asphalt Content: Percent Plus and Minus												
No. Tests	**Top Size [1]**	**1 ½"**	**1"**	**¾"**	**½"**	**3/8"**	**No. 4**	**No. 8**	**No. 30**	**No. 50**	**No. 200**	**A.C.**
1	0.0	8.0	8.0	8.0	8.0	8.0	8.0	8.0	6.0	5.0	2.0	.60
2	0.0	5.7	5.7	5.7	5.7	5.7	5.7	5.7	4.3	3.6	1.4	0.43
3	0.0	4.4	4.4	4.4	4.4	4.4	4.4	4.4	3.3	2.8	1.1	0.33
4	0.0	4.0	4.0	4.0	4.0	4.0	4.0	4.0	3.0	2.5	1.0	0.30
5	0.0	3.6	3.6	3.6	3.6	3.6	3.6	3.6	2.7	2.2	0.9	0.27
6	0.0	3.3	3.3	3.3	3.3	3.3	3.3	3.3	2.4	2.0	0.8	0.24
7	0.0	3.0	3.0	3.0	3.0	3.0	3.0	3.0	2.3	1.9	0.8	0.23
8	0.0	2.8	2.8	2.8	2.8	2.8	2.8	2.8	2.1	1.8	0.7	0.21
12	0.0	2.3	2.3	2.3	2.3	2.3	2.3	2.3	1.7	1.4	0.6	0.17

[1]Defined as the sieve that has 100% passing as defined in Table II-13.

Section 211.09 is amended to replace the last three paragraphs with the following:

The unit bid price will be reduced by 0.5 percent for each adjustment point applied for standard deviation.

Section 211.10–Referee System is amended to replace (a) and (b) with the following:

(a) In the event the test results obtained from one of the eight samples taken to evaluate a particular lot appear to be questionable, the Contractor may request in writing that the results of the questionable sample be disregarded, whereupon the Contractor shall have either an AASHTO-accredited lab or Department lab perform tests on five additional samples taken from randomly selected locations in the roadway where the lot was placed.

In the event the Engineer determines that one of the 8 test results appears to be questionable, the Department will perform tests on five additional samples taken from the randomly selected locations in the roadway where the lot was placed. The test results of

the seven original, i.e. unquestioned, samples will be averaged with the test results of the five road samples, and the mean of the test values obtained for the twelve samples will be compared to the requirements for the mean of twelve tests as specified in Table II-15.

(b) In the event the Contractor questions the mean of the eight original test results obtained for a particular lot, the Contractor may request in writing approval to have either an AASHTO-accredited lab or Department lab perform additional testing of that lot.

In the event the Engineer determines that the mean of the eight original test results are questionable, the Department will perform additional testing of that lot. The test results of the eight samples will be averaged with the test results of the four additional samples taken from randomly selected locations in the roadway where the lot was placed, and the mean of the test values obtained from the twelve samples will be compare to the requirements for the mean of twelve tests as specified in Table II-15.

If the Contractor requests additional tests, as described in (a) or (b) herein, the Contractor shall sample the material and have either an AASHTO-accredited lab or Department lab test the material in accordance with Department-approved procedures. The Engineer reserves the right to observe the sampling and testing.

In the event the mean of the test values obtained for the twelve samples conforms to the requirements for the mean of twelve tests, the material will be considered acceptable. In the event that the mean of the test values obtained for the twelve samples does not conform to the requirements for the mean result of twelve tests, the lot will be adjusted in accordance with the adjustment rate specified in Section 211.09 of the Specifications.

Samples of the size shown herein shall be saw cut by the Contractor for testing without the use of liquids:

Application Rate	Minimum Sample Size
125 lb/yd^2	8 by 8 in
150 lb/yd^2	7 by 7 in
200 lb/yd^2	6 by 6 in
300 lb/yd^2	5 by 5 in

Section 211.12 (a) **– Certification for Plant Operation and Sampling** is replaced with the following:

(a) **Certification for Plant Operation and Sampling**: A Certified Asphalt Plant Level I Technician or a Certified Asphalt Plant Level II Technician shall sample material at the plant.

Section 211.15—Initial Production is replaced with the following:

(a) **Warm Mix Asphalt (WMA):** At the start of production, the Contractor shall place no more than 500 tons or up to one day's production as directed by the Engineer at an approved site, which may be the project site, so the Engineer can examine the process control of the mixing plant, the Contractor's placement procedures, surface appearance of the mix, compaction patterns of the Contractor's roller(s), and correlation of the nuclear density device.

(b) **Hot Mix Asphalt (HMA):** At the start of production of a mix not previously used on a state roadway, the Contractor shall place 100 to 300 tons or up to one day's production as directed by the Engineer at an approved site, which may be the project site, so the Engineer

can examine the process control of the mixing plant, the Contractor's placement procedures, surface appearance of the mix, compaction patterns of the Contractor's roller(s), and correlation of the nuclear density device.

The material shall be placed at the specified application rate and will be paid for at the contract unit price for the specified mix type. The Engineer will determine the disposition of material that was not successfully produced and/or placed due to negligence in planning, production, or placement by the Contractor.

VIRGINIA DEPARTMENT OF TRANSPORTATION
2007 ROAD AND BRIDGE SUPPLEMENTAL SPECIFICATIONS

SUPPLEMENTAL SECTION 212—JOINT MATERIALS

SECTION 212—JOINT MATERIALS of the Specifications is amended as follows:

Section 212.02(h)**—Gaskets for pipe** is replaced with the following:

(h) **Gaskets for pipe** shall conform to the following: Rubber gaskets for ductile iron pipe and fittings shall conform to the requirements of AWWA C111; rubber gaskets for all other pipe shall conform to the requirements of ASTM C443 and the ozone cracking resistance described in Section 237.02.

Preformed plastic gaskets shall conform to the requirements of ASTM C990.

VIRGINIA DEPARTMENT OF TRANSPORTATION
2007 ROAD AND BRIDGE SUPPLEMENTAL SPECIFICATIONS

SUPPLEMENTAL SECTION 214—HYDRAULIC CEMENT

SECTION 214—HYDRAULIC CEMENT of the Specifications is amended as follows:

Section 214.02(b) **Portland cements** is amended by replacing 1. with the following:

1. The SO_3 content as specified in AASHTO M85 will be permitted, provided supporting data specified in AASHTO M85 are submitted to the Department for review and acceptance prior to use of the material.

Section 214.02(b) **Portland cements** is amended by deleting 3., 4., and 5.

Section 214.02—Detail Requirements is amended by adding the following:

(c) **Expansive hydraulic cement** shall conform to the requirements of ASTM C 845 Type K.

VIRGINIA DEPARTMENT OF TRANSPORTATION
2007 ROAD AND BRIDGE SUPPLEMENTAL SPECIFICATIONS

SUPPLEMENTAL SECTION 215—HYDRAULIC CEMENT CONCRETE ADMIXTURES

SECTION 215—HYDRAULIC CEMENT CONCRETE ADMIXTURES of the Specifications is amended as follows:

Section 215.02(g) **Fly ash** is replaced with the following:

(g) **Pozzolan** shall conform to Section 241 of the Specifications.

Section 215.02—Materials is amended by adding the following:

(k) **Metakaolin** shall conform to the requirements of AASHTO M321

VIRGINIA DEPARTMENT OF TRANSPORTATION
2007 ROAD AND BRIDGE SUPPLEMENTAL SPECIFICATIONS

SUPPLEMENTAL SECTION 217—HYDRAULIC CEMENT CONCRETE

SECTION 217—HYDRAULIC CEMENT CONCRETE of the Specifications is amended as follows:

Section 217.02(a) **Cementitious Materials** is replaced with the following:

Cementitious materials shall be a blend of mineral admixtures and Portland cement or a blended cement. In overlay concretes, expansive hydraulic cement is permitted in lieu of Portland cement. Portland cement (Types I, II, III) blended cements (Type IP, Type IS) or expansive cement (Type K) shall comply with Section 214 of the Specifications. Flyash, ground granulated iron blast-furnace slag (GGBFS), silica fume or metakaolin shall conform to Section 215 of the Specifications. As a portion of the cementitious material, Table 1 lists the minimum percents of specific pozzolans required by mass of the cementitious material depending on the alkali content of the cement. Any other mineral admixture or any other amount or combination of mineral admixtures may be used if approved by the Engineer. As a portion of the cementitious material, the fly ash content shall not exceed 30 percent for Class F, the ground granulated blast-furnace slag content shall not exceed 50 percent and the silica fume content shall not exceed 10 percent unless approved by the Engineer. Class C Flyash or other pozzolans may be used provided the contractor demonstrates that the percent usage of Class C Flyash or other pozzolans have a maximum expansion of 0.15% according to ASTM C227 at 56 days using borosilicate glass as aggregate. Blended cements require no further pozzolan additions to meet minimum pozzolan content to compensate for the alkali-silica reaction.

Up to 7 percent silica fume may be added to all combinations of cementitious materials to reduce early permeability without approval by the Engineer. Other silica fume additions must be approved by the Engineer.

Table 1 – Minimum percent pozzolan required by mass of cementitious material as a portion of the total cementious materials and are based upon the alkali content of the cement.

	Total Alkalies of Cement is less than or equal to 0.75%	Total Alkalies of Cement is greater than 0.75% and less than or equal to 1.0%
Class F Flyash	20%	25%
GGBF Slag	40%	50%
Silica Fume	7%	10%
Metakaolin	7%	10%

TABLE II–17 Requirements for Hydraulic Cement Concrete is replaced with the following:

TABLE II-17
Requirements for Hydraulic Cement Concrete

Class of Concrete	Design Min. Laboratory Compressive Strength at 28 Days (f'c) (psi)	Aggregate Size No.[6]	Design Max. Laboratory Permeability at 28 Days (Coulombs)[5]	Design Max. Laboratory Permeability at 28 days - Over tidal water (Coulombs)[5]	Nominal Max. Aggregate Size (in)	Min. Grade Aggregate	Min. Cementitious Content (lb./cu yd)	Max. Water /Cementitious Mat. (lb. Water/lb. Cement)	Consistency (in of slump)	Air Content (percent)[1]
A5 Prestressed and other special designs [2]	5,000 or as specified on the plans	57 or 68	1,500	1,500	1	A	635	0.40	0-4	4 1/2 ± 1 1/2
A4 General	4,000	56 or 57	2,500	2,000	1	A	635	0.45	2-4	61/2 ± 1 1/2
A4 Post & rails	4,000	7,8 or 78	2,500	2,000	0.5	A	635	0.45	2-5	7± 2
A3 General	3,000	56 or 57	3,500	2,000	1	A	588	0.49	1-5	6± 2
A3a Paving	3,000	56 or 57	3,500	3,500	1	A	564	0.49	0-3	6± 2
A3b Paving	3,000	357	3,500	3,500	2	A	N.A	0.49	0-3	6± 2
B2 Massive or lightly Reinforced	2,200	57	N.A.	N.A.	1	B	494	0.58	0-4	4± 2
C1 Massive Unreinforced	1,500	57	N.A.	N.A.	1	B	423	0.71	0-3	4± 2
T3 Tremie seal	3,000	56 or 57	N.A.	N.A.	1	A	635	0.49	3-6	4± 2
Latex hydraulic cement concrete overlay [3]	3,500	7,8 or 78	1,500	1,500	0.5	A	658	0.40	4-6	5± 2
Silica fume, silica fume /Class F Fly Ash or silica fume/slag concrete overlay [4]	5000	7,8 or 78	1,500	1,500	0.5	A	658	0.40	4-7	6± 2
Class F Fly Ash or slag overlay	4000	7,8 or 78	1,500	1,500	0.5	A	658	0.40	4-7	6± 2

(See next page for notes on TABLE II-17).

(See next page for notes on TABLE II-17).

---------- (TABLE II-17 Notes) ----------

[1] When a high-range water reducer is used, the upper limit for entrained air may be increased by 1% and the slump shall not exceed 7 inches.

[2] When Class A5 concrete is used as the finishing bridge deck riding surface, or when it is to be covered with asphalt concrete with or without waterproofing, the air content shall be 5 1/2 ± 1 1/2 percent.

[3] The latex modifier content shall be 3.5 gallons per bag of cement. Slump shall be measured approximately 4.5 minutes after discharge from the mixer.

[4] Silica fume with a minimum of 7% by weight of cementitious material; silica fume with a range of 2.5-5 % shall be combined with Class F Fly Ash in range of 15-20% and minimum cement of 77.5% by weight of cementitious material; silica fume with a range of 2.5-5% shall be combined with Ground Granulated Blast Furnace Slag in the range of 30-35% and a minimum cement of 67.5% by weight of cementitious material.

[5] The permeability testing does not apply to small bridges identified on the bridge plans and to concrete structures and incidental concrete as described in Sections 219, 232, 302, 415, 502, 504, 506 and 519. Curing and testing of test cylinders for permeability will be in accordance with VTM 112.

[6] The contractor may use different aggregate sizes or a combination of sizes to increase the coarse aggregate content of the concrete as approved by the Engineer. The maximum size of the coarse aggregate shall not exceed 2.5 inches.

Note: With the approval of the Engineer, the Contractor may substitute a higher class of concrete for that specified at the Contractor's expense.

Section 217.02(b) **Formulated latex modifier** is amended by adding the following:

For latex-modified concrete, Type I, Type II, Type III or Type K, cement shall be used without mineral admixtures.

Section 217.04(a)4. **Admixtures** is replaced with the following:

4. **Admixtures** shall be dispensed and used according to the manufacturer's recommendations. They shall be added within a limit of accuracy of 3 percent, by means of an approved, graduated, transparent, measuring device before they are introduced into the mixer. If more than one admixture is to be used, they shall be released in sequence rather than in the same instant. Once established, the sequence of dispensing admixtures shall not be altered. However, when the amount of admixture required to give the specified results deviates appreciably from the manufacturer's recommended dosage, use of the material shall be discontinued.

Section 217.05—Equipment is amended to replace the first paragraph with the following:

Equipment and tools necessary for handling materials and performing all parts of the work will be approved by the Engineer and must be in accordance with one of the following procedures:

1. having a current National Ready Mix Concrete Association Plant and Truck Certification, or

2. having a Department approved self-certification program in-place prior to the production of concrete for the Department.

Failure to comply with one or the other of these procedures will result in the concrete production being unapproved and work will not be allowed to proceed.

Section 217.05(a) **Batching Equipment** is amended to replace the second paragraph with the following:

Scales used for weighing aggregates and cement shall be approved and sealed in accordance with the requirements of Section 109 of the Specifications.

Section 217.05—Equipment is amended to add the following:

(d) **High Performance Volumetric Mixers (HPVMs):** The Contractor may produce the specified class of hydraulic cement concrete in Table II-17 in accordance with Section 217.02(a) of the Specifications provided that the manufacturer's equipment meets the tolerance requirements of Section 217.04(a) of the Specifications and has a stamped plate from the Volumetric Mixers Manufacturers Bureau stating that the equipment conforms to the requirements in ASTM C685.

The hydraulic cement concrete shall be mixed at the point of delivery by a combination of materials transport and mixer unit conforming to the following:

1. The unit shall be equipped with calibrated proportioning devices for each ingredient added to the concrete mix. The unit shall be equipped with a working recording meter that is visible at all times and furnishes a ticket printout with the calibrated measurement of the mix being produced. If at anytime the mixer fails to discharge a uniform mix, production of concrete shall halt until any problems are corrected.

2. Each unit shall have a metal plate(s) attached in a prominent place by the manufacturer on which the following are plainly marked: the gross volume of the transportation unit in terms of mixed concrete, the discharge speed and the mass calibrated constant of the machine in terms of volume.

3. HPVMs shall be calibrated by a Department approved testing agency in accordance with the manufacturer's recommendations at an interval of every 6 months or a maximum production of 2500 cubic yards, whichever occurs first prior to use on the project. The yield shall be maintained within a tolerance of ±1 percent and verified using a minimum 2 cubic feet container every 500 cubic yards or a minimum once per week.

4. The three cubic feet initially discharged from the truck shall be discarded and not used for concrete placement. Acceptance of the specified class of concrete shall comply with Section 217.08 of the Specifications except that the sample secured for acceptance testing will be taken after four cubic feet is discharged from the delivery vehicle. During discharge, the consistency as determined by ASTM C143 on representative samples taken from the mixer discharge at random intervals shall not vary more than 1 inch. Acceptance tests shall be performed on each load. If test data demonstrates that consistency of concrete properties are being achieved, the Engineer may reduce testing requirements.

5. The HPVM shall be operated by a person who is a certified operator by the HPVM manufacturer. Any equipment adjustments made during the on-site production of concrete shall be done under the direct on-site supervision of the producer's VDOT Concrete Plant and Field Certified Technician.

Each load of HPVM produced concrete shall be accompanied by a Form TL-28 signed by the producer's VDOT Certified Concrete Plant Technician or a designated company representative working under the direct on-site supervision of the producer's VDOT Concrete Plant and Field Certified Technician. The form shall be delivered to the Inspector at the site of the work. Loads that do not carry such information or do not arrive in satisfactory condition shall not be used.

Section 217.07—Proportioning Concrete Mixtures is amended to replace the first paragraph with the following:

The Contractor is responsible for having a Certified Concrete Plant Technician available during batching operations, and a Certified Concrete Field Technician shall be present during placing operations.

Section 217.07—Proportioning Concrete Mixtures is amended to delete the third paragraph beginning with "**A Certified Concrete Batcher**".

Section 217.08—Acceptance is replaced with the following:

(a) **Air Consistency Tests:** Air and consistency tests will be performed by the Department prior to discharge of concrete into the forms to ensure that specification requirements are consistently being complied with for each class of concrete. The sample secured for the tests shall be taken after at least two cubic feet of concrete has been discharged from the delivery vehicle. The two cubic feet discharged is not to be used as part of the test sample. Any deviation from sampling and testing procedures must be approved by the Engineer. The Contractor shall provide a receptacle conforming to the requirements of ASTM C31, Section 5.9, for the Department's use in obtaining the sample. If either determination yields a result that is outside of the allowable range for air content or consistence, the following procedure will be used:

1. The Engineer will immediately perform a recheck determination. If the results confirm the original test results, the load will be rejected.

2. The Contractor's representative will be immediately informed of the test results.

3. The Contractor's representative shall notify the producer of the test results through a pre-established means of communication.

The Engineer may perform any additional tests deemed necessary and reject all remaining material that fails the tests.

Entrained air content will be determined in accordance with the requirements of ASTM C231 or ASTM C173. Acceptance or rejection will be based on the results obtained from these tests.

In general, a mixture that contains the minimum amount of water consistent with the required workability shall be used. Consistency will be determined in accordance with the requirements of ASTM C143. Adding cement to loads previously rejected for excessive water content or consistency will not be permitted.

(b) **Strength Tests:** The 28-day compressive strengths (f'_c) specified in Table II-17 are the strengths used in the design calculations. The Engineer will verify design strengths by tests made during the progress of the work in accordance with the requirements of ASTM C31 (Standard Practice for Making and Curing Concrete Test Specimens in the Field) and ASTM C39 (Standard Test Method for Compressive Strength of Cylindrical Concrete Specimens) with the exception that the fresh concrete sample used for testing is to be secured after at least two cubic feet has been discharged from the delivery vehicle. The two cubic feet discharged is not to be used as part of the test sample. Any deviation from sampling and testing procedures must be pre-approved by the Engineer. The use of ASTM C42 (Standard Test Method for Obtaining and Testing Drilled Cores and Sawed Beams of Concrete) will be at the Engineer's discretion. If the 28-day design compressive strength

(f'c) test results do not conform to the strength requirements specified in Table II-17, immediate steps shall be taken to adjust the mixture design. In addition, the Engineer may require removal of or corrective measures be applied to any concrete that does not meet the requirements of Table II-17. If the concrete cylinder strength, f'_{cyl}, is less than the specified compressive strength found in Table II-17, the criteria in Table II-17A shall apply:

Table II – 17A Price Reduction or Action Taken due to f'_{cyl} not meeting the specification value f'_c listed in Table II-17

Condition	Concrete is a Pay Item	Concrete is <u>Not</u> a Pay Item
f'_{cyl} is greater than or equal to 98% f'_c	A	A
f'_{cyl} is greater than or equal to 90% f'_c and less than 98% f'_c	B	C
f'_{cyl} is less than 90% f'_c	D	D
f'_{cyl} is not available due to the Contractor's inappropriate handling and storage of specimens in accordance with ASTM C31	D	D

f'_c is the 28-day design compressive strength found in Table II-17.

f'_{cyl} is the actual average tested strength of the standard-cured concrete cylinder made and tested in accordance with ASTM C31 and ASTM C39.

A = full payment

B = pay reduction = $[((f'_c - f'_{cyl})/f'_c)$ x contract unit price for concrete per yd^3 x number of yds^3 the concrete represents] or $500, whichever is greater.

C = pay reduction = $[((f'_c - f'_{cyl})/f'_c)$ x 5 x Contractor's invoice price for concrete per yd^3 x number of yds^3 the concrete represents] or $500, whichever is greater.

D = The Contractor shall submit an investigative plan stamped by a Virginia-licensed Professional Engineer outlining how the Contractor shall demonstrate that the in-place concrete meets the structural strength requirements of the design. For barriers, parapets, railings, etc., no reduction in concrete strength below $0.9f'_c$ shall be allowed. For all other applications, the investigative plan must be approved by the Department's Engineer prior to the execution of the investigation. All costs associated with this investigation shall be borne by the Contractor. After the investigation is completed, a report shall be submitted to the Engineer showing the results of the analysis, testing and conclusions of the Virginia-licensed Professional Engineer and recommendations for action proposed by the Contractor to be taken with the concrete that did not meet the strength requirements. The Department retains all rights to determine if the action proposed with regard to the concrete in question is acceptable. If the Department concurs with the proposed action and the concrete meets the

structural strength requirements of the design and remains in place, any price reduction will be taken by Method B if the concrete is a pay item or Method C if the concrete is not a pay item. If the concrete does not meet the structural requirements of the design, the concrete shall be removed and replaced at no cost to the Department. The maximum penalty assessed for low strength concrete left in place will be 10% as specified in Table II-17A not including the cost of the investigation and any corrective measures taken by the Contractor.

No calculated penalty less than $500 will be assessed. The Contractor shall have the right to remove and replace concrete failing to meet specifications at the Contractor's cost.

Before concrete is placed, the Contractor shall provide a storage chamber at his expense for temporary storage of the Department's concrete cylinders. The contractor shall be responsible for maintaining the chamber such that the concrete test cylinders are kept in a continuously moist condition and within a temperature range of 60 degrees F to 80 degrees F. The chamber shall be equipped with a continuously recording thermometer accurate to ± 2 degrees F for the duration of concrete cylinder curing. The chamber shall be located in an area where the test cylinders will not be subject to vibration and shall be of sufficient size or number to store, without crowding or wedging, the required number of test cylinders as determined by the Contractor based on his plan of operations. Location of the chamber is subject to approval by the Engineer.

When use of high-early-strength hydraulic cement concrete is required, it shall conform to the requirements specified in Table II–17 except that the 28-day strength shall be obtained in 7 days. Up to 800 pounds per cubic yard of Type I, Type II or Type III cement may be used to produce high-early-strength concrete.

(c) **Concrete Temperature** shall be measured in accordance with the requirements of ASTM C1064.

(d) **Quality Assurance** for Low Permeability Concrete**:**

General:

At least two trial batches, using job materials, with permissible combination of cementitious materials shall be prepared, and test specimens shall be cast by the Contractor and tested by the Department for permeability and strength at least a month before the field application. The permeability samples shall be cylindrical specimens with a 4-inch diameter and at least 4-inches in length. Cylinders will be tested at 28 days in accordance with VTM 112. The test value shall be the result of the average values of tests on two specimens from each batch. Permeability values obtained from trial batches shall be 500 coulombs below the maximum values specified in Table II-17 of the Specifications to be acceptable.

Acceptance Tests:

For each set of cylinders made for compressive strength tests, two additional cylinders shall be made for the permeability test. The Department will be responsible for making and testing all permeability test specimens.

If the average permeability test result is equal to or less than the value for the specified class of concrete in Table II-17, then full payment will be made for the lot the average permeability test result represents. However, if the average permeability test result

exceeds the coulomb value in Table II-17, payment for that lot of concrete shall be reduced by 0.005 percent for each coulomb above the coulomb value in Table II-17 multiplied by the bid item cost of the concrete times the number of cubic yards or cubic meters of concrete in the lot. The reduction in price will not exceed 5 percent of the bid price of the concrete. Any concrete with a coulomb value that exceeds the maximum required in Table II-17 by 1000 coulomb will be rejected. However, bridge deck concrete with any coulomb value exceeding the maximum required by over 1000 coulomb may be accepted by the Engineer at 95 percent of the bid price if the concrete in question has the required strength and meets other specification requirements, and the Contractor applies, at his own expense, an approved epoxy concrete overlay to the top of the entire deck. In such case deck grooving will not be required. Epoxy overlays over latex overlays will not be permitted. The adjustment to the roadway grade shall be made as required by the Engineer at the Contractor's expense.

Similarly, concrete in abutments and pier caps with coulomb value exceeding the maximum required in Table II-17, by more than 1000 coulomb may be accepted at 95 percent of the bid price if it has the required strength and meets other specification requirements, and the Contractor applies at his own expense, one coat of Type EP-3B and one coat of EP-3T in conformance with the requirements of Section 243.02 of the Specifications, on top of the pier cap or abutment seat.

Section 217.09(b) **Ready Mixed Concrete** is amended to replace the second paragraph with the following:

Each load of transit or shrink-mixed concrete shall be accompanied by Form TL-28 signed by the VDOT Certified Concrete Field Technician or a designated company representative working under the direction of the VDOT Certified Concrete Field Technician. The form shall be delivered to the Inspector at the site of the work. Loads that do not carry such information or that do not arrive in satisfactory condition shall not be used.

Section 217.09(b) **Ready-Mixed Concrete** is amended to replace the fourth paragraph and the table with the following:

Each batch of concrete shall be delivered to the site of work and discharged within 90 minutes of the time the cement is introduced into the mixture unless approved otherwise by the Engineer.

Section 217.09(b)1. **Transit mixing** is amended to replace the first paragraph with the following:

1. **Transit mixing:** Concrete shall be mixed in a truck mixer. Mixing shall begin immediately after all ingredients are in the mixer and shall continue for at least 70 revolutions of the drum or blades at the rate of at least 14 but no more than 20 revolutions per minute.

VIRGINIA DEPARTMENT OF TRANSPORTATION
2007 ROAD AND BRIDGE SUPPLEMENTAL SPECIFICATIONS

SUPPLEMENTAL SECTION 221—GUARDRAIL

SECTION 221—GUARDRAIL of the Specifications is amended as follows:

Section 221.02(e)2 is replaced with the following:

2. **Sheet steel for fabricated shapes** shall conform to the requirements of ASTM A1011, Grade 36.

VIRGINIA DEPARTMENT OF TRANSPORTATION
2007 ROAD AND BRIDGE SUPPLEMENTAL SPECIFICATIONS

SUPPLEMENTAL SECTION 224—CASTINGS

SECTION 224—CASTINGS of the Specifications is amended as follows:

Section 224.02—Materials is amended as follows:

The following is added as the first paragraph:

All casting suppliers/manufacturers shall have an approved QA/QC plan on file with the Department. Junction boxes that are to be installed within that portion of the roadway not protected by a guardrail or barrier shall be designed in accordance with the requirements of AASHTO M306 and M105, Class 35B.

Section 224.02(b) is replaced with the following:

(b) **Gray iron castings** used in that portion of the roadway not protected by a guardrail or barrier shall conform to the requirements of AASHTO M306 and M105, Class 35B. All other castings shall conform to AASHTO M105, Class 35B.

Section 224.02(c) is replaced with the following:

(c) **Ductile iron castings** used in that portion of the roadway not protected by a guardrail or barrier shall conform to AASHTO M306. All other ductile iron castings shall conform to ASTM A536, Grade 60-40-18.

Section 224.03—Detail Requirements is replaced with the following:

If castings are supplied from materials conforming to Sections 224.02 (a), (d) and (e) of the Specifications, all tolerances and workmanship requirements for castings shall conform to AASHTO M306. If used in that portion of the roadway not protected by a guardrail or barrier, the load testing shall conform to the requirements of AASHTO M306. When the alternate load test is used, test bars shall be present and fully identifiable with regard to the casting lot. Each casting in a lot must have the same markings as all of the other castings in the lot; if not, each group of castings with the same markings within the original lot, becomes a new lot.

VIRGINIA DEPARTMENT OF TRANSPORTATION
2007 ROAD AND BRIDGE SUPPLEMENTAL SPECIFICATIONS

SUPPLEMENTAL SECTION 232—PIPE AND PIPE ARCHES

SECTION 232—PIPE AND PIPE ARCHES of the Specifications is amended as follows:

Section 232.02 Detail Requirements of the specifications is amended to replace the first paragraph with the following:

Concrete, corrugated steel and polyethylene pipe shall only be supplied from manufacturers currently having an approved Quality Control Plan on file with the Department.

Section 232.02(a)1.b.(6) is replaced with the following:

(6) **Strength tests** shall be performed by the three-edge bearing method in accordance with the requirements of AASHTO T280 or by control cylinders tested in accordance with ASTM C31 and C39 or by the testing of cores in accordance with ASTM C42. Control cylinders for acceptance testing shall be cured under the same conditions as the concrete the cylinders represent. Hand cast pipe and end sections may be tested in accordance with the requirements of ASTM C31 and C39. Concrete pipe may be shipped after reaching 85 percent of design strength as determined by control cylinders or cores.

Section 232.02(a)1.b.(7) is replaced with the following:

(7) **Absorption tests** shall be performed in accordance with the requirements of AASHTO T280 on specimens of broken pipe or cores.

Section 232.02(c)2. **Asphalt-coated corrugated steel culvert pipe and pipe arches** is deleted entirely.

Section 232.02-Detail Requirements is amended to add the following:

(m) **Polypropylene (PP) Pipe:**

1. **PP corrugated culvert and storm drain pipe** shall conform to the requirements of AASHTO MP 21-11, and shall be double wall pipe (Type S) for nominal diameters of 12 inches through 30 inches, inclusive, and shall be triple wall pipe (Type D) for nominal diameters of 36 inches through 48 inches, inclusive. Polypropylene Pipe less than 12 inches and greater than 48 inches in diameter will not be allowed. Fittings and joining systems shall also meet the requirements of the AASHTO MP 21-11.

VIRGINIA DEPARTMENT OF TRANSPORTATION
2007 ROAD AND BRIDGE SUPPLEMENTAL SPECIFICATIONS

SUPPLEMENTAL SECTION 238—ELECTRICAL AND SIGNAL COMPONENTS

SECTION 238 ELECTRICAL AND SIGNAL COMPONENTS of the Specifications is amended as follows:

Section 238.02(f) **Electrical and Signal Junction Boxes** is replaced with following:

(f) **Electrical and Signal Junction Boxes:**

Boxes, frames and covers shall be water resistant. Covers shall be secured with stainless steel bolts and fasteners. Covers shall be flush with surface of the junction box and not protrude above the top of the junction box flange.

Junction box bolt attachment holes shall be drilled through to prevent debris from collecting in the threaded bolt holes.

Junction boxes shall be tested and certified by an independent testing laboratory as meeting the requirements indicated herein for approval for use. Independent testing laboratory shall be approved by VDOT Materials Division prior to testing. The Contractor shall furnish the Engineer documentation of such test results.

Testing reports shall provide complete test results for the type of design testing indicated for the respective type of junction box.

Junction Boxes for deliberate traffic in the roadway applications:

- Concrete shall conform to the requirements of Section 217 of the Specifications and shall be designed to meet the provisions of AASHTO's *Standard Specifications for Highway Bridges for* HS20 loading. Concrete shall have a design minimum compressive strength of 4000 psi.

- Gray Iron frame and covers shall conform to the requirements of Section 224 of the Specifications.

Junction Boxes for off roadway applications:

- Shall conform to the requirements of ANSI/SCTE 77 2007 and tier 15 loading. Boxes shall be open bottom.

- Shall be Polymer concrete with straight sides or Polymer concrete with flared or straight fiberglass sides.

- Other materials may be submitted for the sidewalls provided they conform to the requirements of ANSI/SCTE 77 2007 and tier 15 loading.

Junction Boxes frames and covers for bridge structures encasements shall be one of the following types:

1. Steel castings conforming to the requirements of Section 224 of the Specifications, galvanized inside and out.

2. Welded sheet steel having a thickness of at least 3/16 inch or 7 gage, galvanized inside and out.

3. Polymer concrete with fiberglass sides or all polymer concrete.

Section 238.02(h)6.f. **Light Emitting Diode (LED) traffic signal head sections** is amended to replace the third paragraph with the following:

LED arrow traffic signal modules shall conform to the requirements of the *ITE Vehicle Traffic Control Signal Heads – Light Emitting Diode Vehicle Arrow Traffic* issued April 3, 2006 (inclusive of any ITE documents that amend, revise and/or supersede it).

And to replace the seventh paragraph with the following:

The LED's shall be mounted and soldered to a printed circuit board. Modules shall be provided with an external in-line fuse or internal fusing of the 120 VAC (+) input. The fuse shall be rated in accordance with the LED module manufacturer. The LED signal module shall utilize the same mounting hardware used to secure the incandescent lens and gasket assembly and shall only require a screwdriver or standard installation tool to complete the mounting.

VIRGINIA DEPARTMENT OF TRANSPORTATION
2007 ROAD AND BRIDGE SUPPLEMENTAL SPECIFICATIONS

SUPPLEMENTAL SECTION 245—GEOSYNTHETICS

SECTION 245—GEOSYNTHETICS of the Specifications is amended as follows:

Section 245.03(a) **Geotextile Fabric for Use in Silt Fences, Silt Barriers, or Filter Barriers** is replaced with the following:

(a) **Geotextile Fabric for Use in Silt Fences, Silt Barriers, or Filter Barriers:** Geotextile shall be a woven fabric with monofilament yarns only and function as a vertical; permeable interceptor designed to remove suspended soil from overland water flow. Fabric shall filter and retain soil particles from sediment-laden water to prevent eroding soil from being transported off the construction site by water runoff. Fabric shall contain ultraviolet inhibitors and stabilizers to provide at least 6 months of expected, usable construction life at a temperature of 0 degrees F to 125 degrees F. The tensile strength of the material after 6 months of installation shall be at least 50 percent of the initial strength.

Physical Property	Test Method	Requirements
Filtering efficiency	VTM-51	Min. 75%
Flow rate	VTM-51	Min. 0.2 gal/ft^2/min

In addition to these requirements, the geotextile shall comply with the requirements of AASHTO M288 for temporary silt fence property requirements, Table 7, for grab strength and ultraviolet stability.

Section 245.03(f) **Geocomposite Wall Drain** is amended to delete the first paragraph.

VIRGINIA DEPARTMENT OF TRANSPORTATION
2007 ROAD AND BRIDGE SUPPLEMENTAL SPECIFICATIONS

SUPPLEMENTAL SECTION 247—REFLECTIVE SHEETING

SECTION 247—REFLECTIVE SHEETING of the Specifications is completely replaced with the following:

247.01—Description

This specification covers reflective sheeting used on traffic control devices to provide a retroreflective surface or message. The color of the reflective sheeting shall be as specified in the Contract Documents. Reflective sheeting shall be certified in accordance with the requirements of Section 106.06 of the Specifications.

247.02—Detail Requirements

Reflective sheeting shall be selected from the Department's Approved Products list. Reflective sheeting products are included on the Approved Products List only after the Department determines conformance to the Specifications and the manufacturer has supplied written information indicating conformance to the warranty requirements of Section 247.03 of the Specifications where required. Determination of conformance will include, but not be limited to, the evaluation of test data from AASHTO's National Transportation Product Evaluation Program (NTPEP) or other Department-approved facilities except as noted. When color test data (Chromaticity and Luminance Factor - Y%) provided by NTPEP or other Department-approved facilities are evaluated, color must have been maintained within the color specification limits for the full duration of the outdoor weathering test. The sheeting and any applied coatings such as inks, overlay films, other coatings, shall be weather resistant in accordance with ASTM D4956 after being tested by AASHTO, NTPEP or other Department approved facilities except as noted.

(a) **Reflective sheeting used on permanent signs (except those addressed in Section b), on object markers, nose of guardrails, permanent impact attenuators (except sand barrels), standard road edge delineators, special road edge delineators, barrier delineators, guardrail delineators, interstate road edge delineators, chevron panels, bridge end panel signs (VW-13), and railroad advance warning signs (including any supplemental plaques) vertical panels (Group 2 channelizing devices), traffic gates, Automatic Flagger Assistance Device (AFAD) gate arms, and the "STOP" side of sign paddles (hand signalizing device)** shall conform to the requirements of ASTM D4956 for a Type IX material and, except for the "STOP" side of sign paddles, shall be warranted in accordance with Section 247.03 Sheeting Warranty Class I of the Specifications.

Color shall conform to the requirements of 23 CFR, Part 655, Subpart F, Appendix Tables 1 and 1A (non-fluorescent colors) and Tables 3 and 3A (fluorescent colors). In Table 1A, the values for daytime luminance factor (**Y**%) shall be based on the colors for a Type IV, VII, and VIII sheeting.

The minimum maintained coefficient of retroreflection of the sheeting after 3 years on the test deck shall conform to the requirements of ASTM D4956.

1. **Reflective sheeting used on the following signs** shall be Fluorescent Yellow-Green conforming to the requirements of ASTM D4956 for a Type IX material and

shall be warranted in accordance with Section 247.03, Sheeting Warranty Class I of the Specifications.

- **Bicycle Crossing sign (W11-1) including supplemental plaques**
- **Pedestrian Crossing sign (W11-2) including supplemental plaques**
- **Playground sign (W15-1) including supplemental plaques**
- **DEAF CHILD AREA sign including supplemental plaques**
- **WATCH FOR CHILDREN sign including supplemental plaques**
- **School Signing consisting of the following:**
  —School Crossing sign (S1-1)
  —School Bus Stop Ahead sign (S3-1)
  —SCHOOL plaque (S4-3)
  —School Portion of the School Speed Limit sign (S5-1)
  —Supplemental plaques used with these signs

Color shall conform to the requirements of 23 CFR, Part 655, Subpart F, Appendix Tables 3 and 3A.

The minimum maintained coefficient of retroreflection of the sheeting after 3 years on the test deck shall conform to the requirements of ASTM D4956.

(b) **Reflective sheeting used on permanent recreational and cultural interest area guidance signs, and for the hand symbol/DON'T WALK and numerals on permanent educational pedestrian signal signs (R10-3b thru R10-3e)** shall conform to the requirements of ASTM D4956 for a Type III material and shall be warranted in accordance with Section 247.03, Sheeting Warranty Class I of the Specifications.

Color shall conform to the requirements of 23 CFR, Part 655, Subpart F, Appendix Tables 1 and 1A.

The minimum maintained coefficient of retroreflection of the sheeting after 3 years on the test deck shall conform to the requirements of ASTM D4956.

(c) **Reflective sheeting used to delineate the trailer's back frame of Portable Changeable Message Signs (PCMS), Automatic Flagger Assistance Device (AFAD) gate arm, arrow boards and portable lights** shall conform to the requirements of 49 CFR 571.108 for a Grade DOT-C2 truck conspicuity marking. References to ASTM specifications therein shall be interpreted to mean the latest version of the specification at the time of advertisement regardless of the date indicated in the reference.

Color shall conform to the requirements of 23 CFR, Part 655, Subpart F, Appendix Tables 1 and 1A.

This reflective sheeting is not required to be tested by NTPEP.

(d) **Reflective sheeting used on Type III barricades** shall conform to the following:

Minimum Coefficient of Retroreflection R_A
(R_A =Candelas per foot-candle per square foot)

Observation Angle (º)	Entrance Angle (º)	White	Orange
0.2	–4	400	200
0.2	+30	200	80
0.5	–4	300	100

0.5	+30	100	40
1.0	–4	50	25
1.0	+30	15	10

Color and Luminance Factor (Y%) shall conform to the requirements of 23 CFR, Part 655, Subpart F, Appendix Tables 1 and 1A, for a Type IV Sheeting.

Impact Resistance shall conform to the requirements of ASTM D4956.

The minimum maintained coefficient of retroreflection of the sheeting after one year on the test deck shall be at least 50 percent of the minimum coefficient of retroreflection values specified.

(e) **Reflective sheeting used on orange construction and maintenance activity signs, barrier vertical panels installed on concrete traffic barrier service, rear panel of truck-mounted attenuators, temporary impact attenuators (except temporary sand barrels), and the "SLOW" side of sign paddles** shall conform to the requirements of ASTM D4956 for a Type IX, Fluorescent Orange material (with the following retroreflection exception):

Minimum Coefficient of Retroreflection R_A
(R_A =Candelas per foot-candle per square foot)

Observation Angle (º)	Entrance Angle (º)	Fluorescent Orange
0.2	–4	140
0.2	+30	90
0.2	+40	24
0.5	–4	90
0.5	+30	50
0.5	+40	15
1.0	–4	10
1.0	+30	5
1.0	+40	3

Color shall conform to the requirements of 23 CFR, Part 655, Subpart F, Appendix Tables 3 and 3A.

The minimum maintained coefficient of retroreflection of the sheeting after one year on the test deck shall be at least 50 percent of the minimum coefficient of retroreflection values specified.

(f) **Reflective sheeting used on tubular delineators, drums and temporary sand barrels** shall conform to the following:

1. **Reflective sheeting used on tubular delineators and drums** shall conform requirements of ASTM D4956 including supplementary requirement S2 for a Type III reboundable material. Color shall conform to the requirements of Tables 1 and 1A of the USDOT specification as contained in the Appendix to 23 CFR, Part 655, Subpart F except the minimum daytime luminance factor (Y%) for white shall be 25 when used on tubular delineators and drums. The following supplementary table shall apply for tubular delineators and drums:

Minimum Coefficient of Retroreflection R_A
(Candelas per foot-candle per square foot)
(High Intensity)

Observation Angle (º)	Entrance Angle (º)	White	Orange
0.2	+50	75	25
0.5	+50	35	10

Reflective sheeting used on tubular delineators is not required to be tested by NTPEP.

2. **Reflective sheeting used on temporary sand barrels** shall be a fluorescent orange prismatic lens reboundable sheeting conforming to the following:

   Color shall conform to the requirements of Tables 3 and 3A of the USDOT specification as contained in the Appendix to 23 CFR, Part 655, Subpart F.

Minimum Coefficient of Retroreflection R_A
(Candelas per foot-candle per square foot)
(High Intensity)

Observation Angle (º)	Entrance Angle (º)	Fluorescent Orange
0.2	-4	200
0.2	+30	120
0.2	+50	40
0.5	-4	80
0.5	+30	50
0.5	+50	30

Minimum maintained coefficient of retroreflection of the sheeting after one year on the test deck shall be at least 50 percent of the minimum coefficient of retroreflection values indicated above.

Reflective sheeting shall conform to the supplementary requirement S2 of ASTM D4956.

Please note: Beginning July 1, 2012 reflective sheeting used on Drums, Temporary Sand Barrels and Tubular delineators for all projects shall conform to the requirements of ASTM D4956 including supplementary requirement S2 for a Type III reboundable material with the following retroreflection exception as shown in the chart below:

Minimum Coefficient of Retroreflection R_A
(R_A =Candelas per foot-candle per square foot)
(Prismatic Lens)

Observation Angle (º)	Entrance Angle (º)	White	Fluorescent Orange
0.2	-4	400	175
0.2	+30	200	100
0.2	+40	135	60
0.2	+45	120	40
0.5	-4	150	70
0.5	+30	50	30

0.5	+40	45	25
0.5	+45	40	20

Color shall conform to the requirements of 23 CFR, Part 655, Subpart F, Appendix Tables 1 and 1A (non-fluorescent colors) and Table 3 and 3A (fluorescent colors).

The minimum maintained coefficient of retroreflection of the sheeting after one year on the test deck shall be at least 50 percent of the minimum coefficient of retroreflection specified.

(g) **Reflective sheeting used on Permanent Sand Barrels and on Cones** shall conform to the requirements of ASTM D4956 including supplementary requirement S2 for a Type III reboundable material. The following supplementary table shall also apply for cones:

Minimum Coefficient of Retroreflection R_A
(R_A =Candelas per foot-candle per square foot)
(High Intensity)

Observation Angle (º)	Entrance Angle (º)	White
0.2	+50	60
0.5	+50	35

Color shall conform to the requirements of 23 CFR, Part 655, Subpart F, Appendix Tables 1 and 1A.

The maintained coefficient of retroreflection of the sheeting after one year on the test deck shall be at least 50 percent of the minimum coefficient of retroreflection specified for permanent sand barrel sheeting.

Reflective sheeting for cones is not required to be tested by NTPEP.

(h) **Reflective sheeting used on Retroreflective Rollup Signs** shall conform to the following:

Minimum Coefficient of Retroreflection R_A
(R_A =Candelas per foot-candle per square foot)
(Prismatic Lens)

Observation Angle (º)	Entrance Angle (º)	White	Fluorescent Orange	Fluorescent Pink
0.2	–4	500	200	200
0.2	+30	200	80	100
0.5	-4	225	90	100
0.5	+30	85	35	35
1.0	-4	20	10	10
1.0	+30	15	8	10
1.5	-4	5	3	2
1.5	+30	4	1.5	2

Color shall conform to the requirements of 23 CFR, Part 655, Subpart F, Appendix Tables 1 and 1A for white, and Appendix Tables 3 and 3A for fluorescent colors.

Reflective sheeting for retroreflective rollup signs is not required to be tested by NTPEP.

247.03—Warranty Requirements

The reflective or retroreflective sheeting manufacturer shall provide the following warranty to the Department for the respective types of sheeting furnished as specified herein:

Class I Warranty: 10-year warranty with 7 years being 100 percent full replacement covering all material and labor costs associated with fabrication and installation of the sign or device and the final 3 years being 100 percent sheeting replacement cost.

The minimum values of retroreflectivity maintained during the warranty period shall be the same as those required for the maintained coefficient of retroreflection values as indicated herein, or where not indicated, shall be in accordance with those specified in ASTM D4956.

Loss of colorfastness is considered to have occurred if the color of the sheeting is not within the color specification limits in 23 CFR, Part 655, Subpart F, Appendix during the full duration of the warranty period.

Warranty period shall begin on the date of fabrication and shall be documented as follows:

For warranty requirements, each permanent sign shall be labeled on the reverse in a location not to be obscured by sign supports or backing hardware, showing 1.) Month and year the sign was fabricated, marked via punch-out numerals, 2.) Sheeting Manufacturer's name or logo and product designation or number, and 3.) Sign fabricator's name or logo. Labels shall be made of a self adhesive, permanent weather resistant material and shall be a minimum 4" by 4" in size. Label may be made from permanent sign material provided the finished label meets all other aspects required for warranty documentation.

Where the information required for the label is not furnished by punched-out numerals, it shall be supplied by permanent means, such as sign ink, capable of resisting weathering so as to be legible for the full duration of the warranty period.

Prior to applying the label, the area shall be thoroughly cleaned to ensure proper adhesion.

(**c302h00**-0708) **SECTION 302.03(b) PRECAST DRAINAGE STRUCTURES** of the Specifications is amended to include the following:

Precast units, excluding concrete pipe, prestressed concrete items and soundwalls, conforming to the requirements herein will only be accepted under a Quality Control/Quality Acceptance Program (QC/QA). The Contractor shall have the producer perform quality control functions in accordance with a Department approved QC/QA plan. Each piece, manufactured under the QC/QA program, in addition to the date and other required markings, shall be stamped with the letters (QC), as evidence that the required QC/QA procedures have been performed. Each shipping document shall be affixed with the following:

We certify that these materials have been tested and conform to VDOT Precast Concrete Products Quality Assurance Program

_____
Signature and Title

1-14-08 (SPCN)

(**c303kg0**-0708) **AGGREGATE MATERIAL** shall be the size specified conforming to Section 203 of the Specifications. The aggregate shall be placed at locations shown on the plans or as directed by the Engineer. Aggregate material will be measured in units of tons for the size specified in accordance with Section 109 of the Specifications. Payment will be made at the contract unit price per ton, which bid price shall be full compensation for furnishing, placing, and shaping and compaction, if required.

Payment will be made under:

Pay Item	**Pay Unit**
Aggregate Material (Size)	Ton

5-23-95c, Reissued 7-2008c (SPCN)

VIRGINIA DEPARTMENT OF TRANSPORTATION
SPECIAL PROVISION FOR
RESTORING EXISTING PAVEMENT

January 14, 2008cc

I. DESCRIPTION

This work shall consist of restoring existing pavement, removed for installation or repair of utilities such as, but not limited to pipe culverts, conduits, water and sanitary sewer items.

II. MATERIALS

Asphalt Concrete shall conform to the requirements of Section 211 of the Specifications.

Aggregate Subbase material shall conform to the requirements of Section 208 of the Specifications.

Asphalt Material shall conform to the requirements of Section 210 of the Specifications.

Fine Aggregate shall conform to the requirements of Section 202 of the Specifications.

Coarse Aggregate for surface treatment shall conform to the requirements of Section 203 of the Specifications.

Hydraulic Cement Concrete Class A3 shall conform to the requirements of Section 217 of the Specifications.

Steel Reinforcement shall conform to the requirements of Section 223 of the Specifications.

III. PROCEDURES

Pavement restoration shall be in accordance with this Provision and plan notes.

Backfill shall be in accordance with Section 302.03(a)2.g. of the Specifications.

Asphalt Concrete shall be placed and compacted in accordance with Section 315 of the Specifications.

Surface Treatment shall be placed in accordance with the Asphalt Surface Treatment special provision and the attached drawing.

Concrete Pavement shall be placed in accordance with Section 509 of the Specifications and this special provision. Open trench in Hydraulic Cement Concrete Pavement should be located at existing transverse joints if at all possible. If concrete pavement is removed within two feet of an existing transverse joint, pavement removal shall be extended two feet beyond the joint. Reinforcing steel and dowels shall be installed in accordance with Road and Bridge Standard PR-2. Joint replacement shall be in accordance with Road and Bridge Standard PR-2.

IV. MEASUREMENT AND PAYMENT

Restoring Existing Pavement unless otherwise specified will not be measured for separate payment, the cost thereof shall be included in the price bid for the utility to which it pertains in accordance with Section 302.04, Section 520.06 or Section 700.05 of the Specifications, as appropriate. However, widths and depths in excess of the attached drawing that are authorized or directed by the Engineer will be paid for in accordance with Section 109.05 of the Specifications.

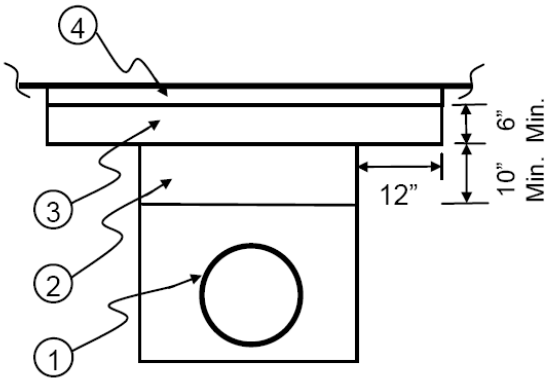

PAVEMENT STRUCTURE
Asphalt Conc. Base and Surface

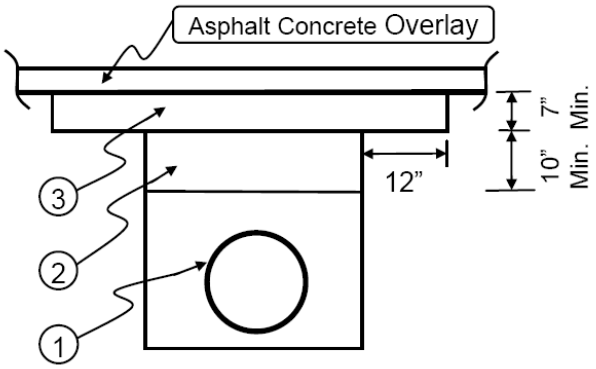

PAVEMENT STRUCTURE
Scheduled for Asphalt Conc. Overlay

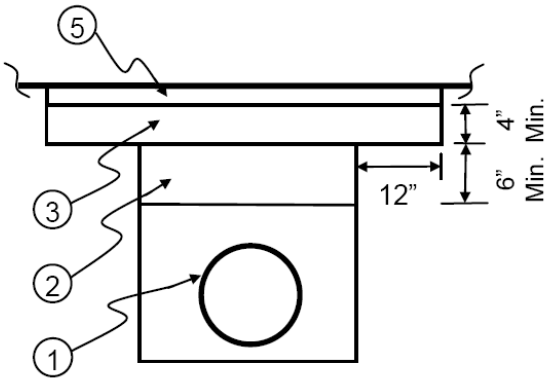

PAVEMENT STRUCTURE
Aggregate Base and Surface Treatment

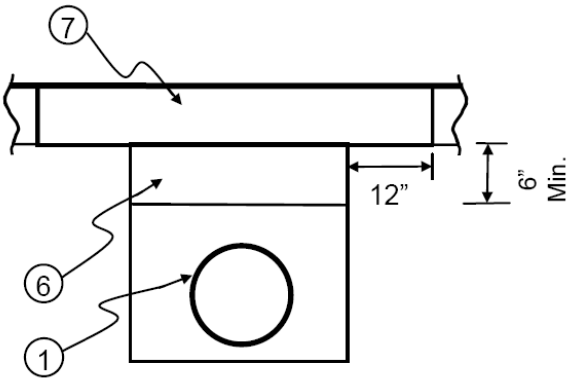

PAVEMENT STRUCTURE
Hydraulic Cement Concrete

NOTES:

The following methods for restoring existing pavement shall be adhered to unless otherwise specified on the plans.

1. Pipe culverts, conduits and utility items shall be installed in accordance with the applicable Road and Bridge Standards and Specifications.

2. Subbase - Aggregate material Type 1, Size 21A or 21B.

3. Asphalt Concrete Type BM-25.0

4. Surface - Asphalt Concrete Type SM-9.5D @ 165 lbs. per sq. yd.

5. Surface - Blotted Seal Coat Type C: The initial seal and final seal shall be CRS-2, CMA-2 or CMS-2h liquid asphalt material @ 0.17 gal./sq. yd. with 15 lbs. of No. 8P stone/sq. yd. each. The blot seal shall be CRS-2, CMS-2 or CMS-2h liquid asphalt material @ 0.15 gal./sq. yd. with 10 lbs. of fine aggregate grade B sand per sq. yd.

6. Subbase - Aggregate material Type 1 Size 21B

7. Surface - Hydraulic Cement Concrete, high early strength, matching existing structure for depth and surface texture.

VIRGINIA DEPARTMENT OF TRANSPORTATION
SPECIAL PROVISION FOR
FLOWABLE BACKFILL

March 11, 2010

I. DESCRIPTION

This work shall consist of furnishing and placing flowable backfill for use as backfill material in pipe installations or in other uses at locations as designated on the plans, and as backfill material for plugging designated abandoned pipes and culverts.

II. MATERIALS

Hydraulic Cement shall conform to the requirements of Section 214 of the Specifications.

Fly Ash shall conform to the requirements of Section 241.02(a) of the Specifications.

Water shall conform to the requirements of Section 216 of the Specifications with the exception that wash water as described in Section 216.02 may comprise the total mix water.

Aggregates shall conform to the requirements of Sections 202 and 203 of the Specifications with a combined gradation as determined by the Contractor.

Admixtures shall conform to the requirements of Section 215 of the Specifications.

Granulated Iron Blast Furnace Slag shall conform to the requirements of Section 215 of the Specifications.

III. MIX DESIGN

Mix design for flowable backfill shall be provided by the Contractor. When used as backfill material in pipe installations or in other uses at locations as designated on the plans flowable backfill shall have a design compressive strength of 30 to 200 pounds per square inch. When used as backfill material for plugging designated abandoned pipes and culverts flowable backfill shall have a design compressive strength of 30 to 1200 pounds per square inch. The design compressive strength requirement shall be at 28 days when tested in accordance with ASTM D 4832. Mix design shall result in a fluid product having no less than an 8-inch slump at time of placement. The Contractor shall submit a mix design for approval supported by laboratory test data verifying compliance with 28 day compressive strength requirements. Mix design shall be approved by the Engineer prior to placement.

IV. PROCEDURES

Mixing and transporting shall be in accordance with Section 217 of the Specifications or by other methods approved by the Engineer.

Temperature of flowable backfill shall be at least 50 degrees F at time of placement. Material shall be protected from freezing for 24 hours after placement.

When used as backfill for pipe installation and floatation or misalignment occurs, correct alignment of the pipe shall be assured by means of straps, soil anchors or other approved means of restraint.

When used to fill the voids in abandoned pipes and culverts, they shall be plugged and backfilled in accordance with the plan details or as directed by the Engineer. The plugs shall be in accordance with the plan details. The backfill material shall be flowable backfill placed into the abandoned pipe or culvert without voids. When deemed necessary by the Engineer, the Contractor shall submit a plan of operations for acceptance showing how the flowable backfill will be placed without voids. The opening for culvert backfill installation shall be sealed with masonry or Class A-3 concrete at completion of backfilling.

V. MEASUREMENT AND PAYMENT

Flowable Backfill will be measured and paid for in cubic yards complete-in-place. When used as backfill material in pipe installations or in other uses at locations as designated on the plans this price shall be full compensation for furnishing and placing flowable backfill, securing the pipe alignment, and for all materials, labor, tools, equipment and incidentals necessary to complete the work. When used as backfill material for plugging designated abandoned pipes and culverts the price bid shall include furnishing and placing of backfill material and furnishing and installing plugs.

Payment will be made under:

Pay Item	Pay Unit
Flowable Backfill	Cubic yard

VIRGINIA DEPARTMENT OF TRANSPORTATION
SPECIAL PROVISION FOR
NONTRACKING TACK COAT

October 5, 2010c

I. DESCRIPTION

This work shall consist of preparing and treating an existing asphalt or concrete surface with asphalt in accordance with the requirements of these specifications and in conformity with the lines shown on the plans or as established by the Engineer.

II. MATERIALS

Liquefied asphalt materials for non-tracking tack coat must be on the Department's list of approved non-tracking tack coat materials. Non-tracking tack coat materials shall not be diluted with water.

III. PROCEDURES

Nontracking Tack will be required only between May 1 and October 1. Tack coat, in accordance with Section 310 of the Specifications, may be used at other times.

Equipment for heating and applying asphalt shall conform to the requirements of Section 314.04(b) of the Specifications or the non-tracking tack coat material's manufacturer's recommendations. The maximum application temperature of liquefied asphalt shall conform to the manufacturer's requirements.

The existing surface shall be patched when necessary, cleaned, and rendered free from irregularities to the extent necessary to provide a reasonably smooth and uniform surface. Unstable corrugated or deteriorated areas of existing pavement shall be removed and replaced with suitable patching materials. The edges of existing pavements that will be adjacent to new pavement shall be thoroughly cleaned to permit adhesion of asphalt.

Tack material shall be uniformly applied with a pressure distributor conforming to the requirements of Section 314.04(b) of the Specifications. Hand spray equipment shall not be used except in areas inaccessible by a pressure distributor. The tack material shall be applied at a rate recommended by the manufacturer. This rate is typically between 0.05 to 0.10 gallons per square yard. The asphalt tack shall be applied to the pavement surface in such a manner that it will bond the overlay and the underlying surfaces together.

Application of tack at joints, adjacent to curbs, gutters, or other appurtenances shall be uniformly applied with a hand wand or with a spray bar at the rate of 0.2 gallon per square yard.

The tack coat shall be applied in a manner to offer the least inconvenience. All traffic, including construction traffic, shall be excluded from sections treated with non-tracking tack until the tack has cured and will no longer track onto adjacent non-treated areas.

The tack coat shall be applied in accordance with the same weather limitations that apply to the course being placed as well as the manufacturer's recommendations. The quantity, rate of application, temperature, and areas to be treated shall be approved by the Engineer prior to application of the tack coat.

Adjacent concrete or asphalt concrete surfaces shall show minimal visible evidence and white or yellow pavement markings shall show no visible evidence of tracking of the asphalt tack material at the end of the production shift. Tracking of the tack material on pavement markings will require the Contractor to immediately restore the marking to their original pre-tack condition. Build-up of the tacking material on existing pavement surfaces shall be removed by the Contractor.

During the application of non-tracking asphalt tack coat, care shall be taken to prevent spattering adjacent items or vehicular traffic. The distributor shall not be cleaned or discharged into ditches or borrow pits, onto shoulders, or along the right of way. When not in use, application equipment shall be parked so that the spray bar or mechanism will not drip asphalt on the surface of the traveled way.

IV. REFEREE SYSTEM

When the new asphalt course is placed on a milled or non-milled surface, the Contractor shall take steps to ensure an adequate bond between the new material and existing surface. If the Engineer suspects the Contractor is failing to apply good bond promoting procedures or adequately tacking the existing surface per the manufacturer's recommendations, the Department may core a minimum of 6 locations to determine the shear and tensile strength at the interface. These locations will be determined through a stratified random selection process. Cores will be tested in the Department's laboratory in accordance with the procedures described in report VTRC 09-R21. For the surface to be acceptable, the average results for shear and tensile strength must be met. A minimum of 3 cores will be tested for shear and 3 cores for tensile strength. The average shear strength must meet or exceed 100 psi with no single core having a shear strength less than 50 psi on a milled surface. The average shear strength must meet or exceed 50 psi with no single core having a shear strength less than 30 psi on a non-milled surface. The average tensile strength of the remaining cores must meet or exceed 40 psi with no single core having a tensile strength less than 20 psi on a milled surface. The average tensile strength of the remaining cores must meet or exceed 30 psi with no single core having a tensile strength less than 20 psi on a non-milled surface. In the event the minimum shear or tensile strength requirements are not met, then payment for the asphalt concrete tonnage placed in the area in dispute shall be reduced by 10 percent.

V. MEASUREMENT AND PAYMENT

Nontracking tack coat, the cost thereof, shall be included in the price for other appropriate pay items.

Patching will be paid for at the contract unit price for the various items used unless a reconditioning item is included in the Contract.

VI. REFERENCES

McGhee, K.K , and Clark, T.M. *Bond Expectations for Milled Surfaces and Typical Tack Coat Materials Used in Virginia*. VTRC 09-R21. Virginia Transportation Research Council, Charlottesville, 2009.

VIRGINIA DEPARTMENT OF TRANSPORTATION
2007 ROAD AND BRIDGE SUPPLEMENTAL SPECIFICATIONS

SUPPLEMENTAL SECTION 302—DRAINAGE STRUCTURES

SECTION 302—DRAINAGE STRUCTURES of the Specifications is amended as follows:

Section 302.03(b) **Precast Drainage Structures** is amended to replace the second paragraph with the following:

Requests for approval of a precast design shall include detailed plans and supporting computations that have been reviewed by a registered Professional Engineer having at least 5 years experience in structural design of precast structures or components proposed and licensed in the Commonwealth. Unless otherwise specified, concrete exposed to freeze/thaw environments shall conform to Section 217.02 of the Specifications and shall have a design strength at 28 days of at least 4,000 pounds per square inch and an air content of 6 ± 2 percent. Concrete not exposed to freeze/thaw environments shall be exempt from the requirements of Section 217.02(a) of the Specifications. The design of the concrete mixture and the method of casting, curing handling and erecting of precast units shall be subject to review by the Engineer. Precast units may be shipped after reaching 85 percent of the design strength as determined by control cylinders. Sampling and testing concrete strength shall be performed using control cylinders in accordance with ASTM C31 and C39 at a rate of one set of cylinders per lot. A lot is defined as a maximum 250 cubic yards or a single weeks production (whichever quantity is less) of precast concrete from each batching operation, being of like material, strength and manufactured by the same process. Variations of lot definition will be governed by applicable specifications and approved by the Engineer. Control cylinders used for acceptance testing shall be cured under the same conditions as the concrete the cylinders represent. Units shall retain their structural integrity during shipment and shall be subject to inspection at the job site. Approval to use precast units shall not be construed as waiving the size and weight limitations specified in Section 107.21 of the Specifications.

Section 302.03(b)2. **Precast arches** is replaced with the following:

2. **Precast arches** shall conform to the applicable requirements of the current AASHTO's *LRFD Bridge Design Specifications* and VDOT modifications (current VDOT I&IM-S&B-80) and the following modifications:

   a. **Protection against corrosion:** The concrete cover of reinforcement shall be at least 1 1/2 inches.

      Reinforcing steel for arches in 0 to 2 foot fills, in corrosive or marine environments, or in other severe exposure conditions shall be corrosion resistant reinforcing steel, Class I. When corrosion resistant reinforcing steel is required, the minimum cover specified shall not be reduced.

      Exposed reinforcing bars, inserts, and plates intended for bonding with future extensions shall be protected from corrosion as directed by the Engineer.

      Reinforcement shall be designed and detailed in consideration of fabrication and construction tolerances so that the minimum required cover and proper positioning of reinforcement shall be maintained.

b.—**Anchorage:** Sufficient anchorage shall be provided at the terminus of lines of precast units. Anchorage may consist of a cast-in-place end section at least 3 feet in length with a headwall or collar around the precast unit(s) provided adequate connection can be made between the collar and units.

c.—**Joints:** Joints between units shall be sealed by preformed plastic or mastic gaskets or grout. When preformed gaskets are used, they shall be of a type listed on the Department's approved products list.

d. **Pipe openings:** Pipe openings will not be allowed in the precast arch but may be provided through the wingwalls. When required, openings shall conform to the requirements of (b)1.b. herein.

Section 302.03(b)3. **Precast box culverts** is replaced with the following:

3. **Precast box culverts** shall conform to the applicable requirements of the current *AASHTO's LRFD Bridge Design Specifications* and VDOT modifications (current VDOT I&IM-S&B-80) and the following modifications:

   a. Precast Box Culverts shall conform to the applicable material requirements of ASTM C1577. The design shall be a Special Design which need not conform to the reinforcing steel and geometry shown in the design tables and the appendix in ASTM C1577.

   b. For protection against corrosion, the following minimum concrete cover shall be provided for reinforcement: For boxes with more than 2 feet of fill over the top slab: 1 1/2 inches. For boxes with less than 2 feet of fill over the top slab: top reinforcement of top slab: 2 1/2 inches; bottom reinforcement of top slab: 2 inches; all other reinforcement: 1 1/2 inches.

      Reinforcing steel for arches in 0 to 2 foot fills, in corrosive or marine environments, or in other severe exposure conditions shall be corrosion resistant reinforcing steel, Class I. When corrosion resistant reinforcing steel is required, the minimum cover specified shall not be reduced.

   c. The type of sealant used in joints between units shall be from the Department's Approved List of Preformed Plastic or Mastic Gaskets.

      Where double or greater lines of precast units are used, a buffer zone of 3 to 6 inches between lines shall be provided. This buffer zone shall be backfilled with porous backfill conforming to the requirements of Section 204. The porous backfill shall be drained by a 3-inch-diameter weep hole, formed by non-rigid tubing, located at the top of the bottom haunch, centered in the outlet end section and at approximately 50-foot intervals along the length of the box. Weep holes shall be covered with a 3-foot-square section of filter barrier cloth firmly attached to the outside of the box. A 3-foot width of filter barrier cloth shall also be centered over the buffer zone for the entire length of the structure after placement of the porous backfill material. Filter barrier cloth shall conform to the requirements of Section 245.

      Forming weep holes and furnishing and placing of the filter barrier cloth shall be included in the price bid per linear foot for the precast box culvert.

   d. At the terminus of precast units, sufficient anchorage shall be provided. This anchorage may consist of a cast-in-place end section at least 3 feet in length with a headwall and curtain wall or a collar cast-in-place around the units provided adequate connection can be made between the collar and units.

When the ends of precast units are skewed, the end section shall be cast monolithically. The skew may be provided by forming, saw cutting, or other methods approved by the Engineer. Regardless of the method used, the variation in the precast unit from the exact skew shall be not greater than 1 1/2 inches at any point.

e. Pipe openings shall conform to the requirements of 1.b. herein.

f. Bedding and backfill shall be in accordance with Standard PB-1 for box culverts.

Section 302.03 Procedures is amended to add the following

(d) **Post Installation Inspection**

In addition to the visual inspection performed by the Department during the initial installation of storm sewer pipes and pipe culverts, a post installation visual/video camera inspection shall be conducted by the Contractor in accordance with the requirements of this specification and VTM 123 on all storm sewer pipe and a selected number of pipe culverts. For the purposes of this Section, a storm sewer pipe is defined as either a component of a storm sewer system as defined in Section 101.02 of the Specifications or any pipe identified on the plans as storm sewer pipe. All other pipe shall be considered pipe culverts. Post installation Inspections shall be performed on straight line and radial installations.

For pipe culverts, a minimum of one pipe installation for each size of each material type utilized on the project will be randomly selected by the Engineer for inspection, however, in no case will the amount of pipe subject to inspection be less than ten percent of the total contract amount for the size and material type indicated. Where possible, for all installations in which the pipe or culvert's size, orientation, or location permit deflection to be easily visually identified, (as verified with the Engineer) the Contractor may perform visual inspections in lieu of video inspections. If defects as described herein are noted during the inspection, the Engineer may require additional pipe installations of that size and/or material be inspected. The Contractor shall coordinate and schedule all post installation inspections so that these are made in the presence of the Engineer. The post installation inspection shall be performed no sooner than 30 days after completion of the pipe installation and placement of final cover (except for pavement structure). The Contractor shall issue a report detailing all issues or deficiencies noted during the inspection (including a remediation plan for each deficiency noted where applicable) no later than 5 days after completion of the inspection.

While the intent of this requirement is to perform the post installation inspection prior to paving, project scheduling may dictate that a particular site be paved before the end of the 30 day period. In such cases, a preliminary inspection of the pipe shall be made, prior to paving over it, to insure that the pipe has been properly installed and is performing well. Performing such a preliminary inspection prior to paving will not relieve the Contractor from the requirement to perform the post installation inspection after the 30 day period.

The Contractor's inspection report shall identify and address any of the following items observed during the post installation inspection including identifying any proposed remediation measures the Contractor plans to perform where applicable. Remediation measures may consist of repairing or replacing the defective pipe section(s) or a combination of the two where differing conditions exist within the same run of pipe. Where permitted as an option, remediation methods for the various installation defects shall be proposed by the Contractor, reviewed with the Engineer and must have the Engineer's approval prior to implementation of the corrective action. Remediation shall be the sole

responsibility of the Contractor. Further, if remediation measures are shown to be necessary, any time associated with such measures shall be reflected in the impact to the Contractor's progress schedule (may take the form of a time impact analysis, where required by the scheduling requirements) and will not relieve the Contractor of his responsibilities to finish the work required by the contract within the contract time limits or form the basis for any claim of delay where such remediation measures are determined to be a result of the Contractor's fault, omission or negligence.

Upon completion of any corrective remedial measures, the corrected installations are to be re-inspected prior to final acceptance of the project utilizing the test methods identified in VTM 123.

The following criteria shall form the basis for inspections for the respective pipe or culvert types listed:

1. **Concrete Pipe\Culverts:**

    a. **Misalignment:** Vertical and horizontal alignment of the pipe culvert or storm drain pipe barrel shall be checked by sighting along the crown, invert and sides of the pipe, and by checking for sagging, faulting and invert heaving. For the purposes of this provision faulting is defined as differential settlement between joints of the pipe, creating a non-uniform profile of the pipe. The person assigned by the Contractor to perform the inspection should take into account pipe or culvert laid with a designed camber or grade change in accordance with project or site requirements. Horizontal alignment shall be checked for straightness or smooth curvature. Any issues involving incorrect horizontal and/or vertical alignment shall be noted in the inspection report. If any vertical and/or horizontal misalignment problems are visually noted by the Engineer or in the inspection report, a further evaluation shall be conducted by the Engineer to determine the impact of the misalignment on the joints and wall of the pipe to ascertain what corrective actions are needed. All corrective actions determined necessary by the Engineer that are a result of the Contractor's negligence, omission or fault shall be the sole responsibility of the Contractor to remedy.

    b. **Joints:** Leaking joints may be detected during low flows by visual observation of the joints or checking around the ends of pipes or culverts for evidence of piping or seepage.

    Differential movement, cracks, spalling, improper gasket placement, movement or settlement of pipe\culvert sections, and leakage shall be noted by the Contractor in the report. Joint separation greater than one inch shall be remediated by the Contractor at his expense to the satisfaction of the Engineer. . Evidence of soil migration through the joint will be further evaluated by the Engineer to determine the level of corrective action necessary. All corrective actions determined necessary by the Engineer that are a result of the Contractor's negligence, omission or fault shall be the sole responsibility of the Contractor to remedy.

    c. **Cracks:** Longitudinal cracks with a width less than one hundredth of an inch (0.01) are considered hairline and minor. They shall be noted in the inspection report; however, no remedial action is necessary.

Longitudinal cracks having a width equal to or greater than one hundredth of an inch (0.01 but equal to or less than one tenth of an inch (0.1) and determined by the Engineer to be detrimental to the structure shall be sealed by a method proposed by the pipe\culvert manufacturer and approved by the Engineer. Pipes or culverts having longitudinal cracks with widths greater than one tenth of an inch (0.1) and determined to be beyond the limits of a satisfactory structural repair shall be replaced by the Contractor at his expense to the satisfaction of the Engineer.

Pipes or culverts having displacement across the crack greater than 0.1 inch but less than 0.3 inch shall be remediated. Remediation methods shall be in accordance with recommendations of the pipe or culvert manufacturer, be acceptable to and authorized by the Engineer before implementation and shall be the sole responsibility of the Contractor. Pipes\culverts having displacement across the crack greater than 0.3 inch shall be replaced by the Contractor at his expense to the satisfaction of the Engineer.

Transverse cracks will be evaluated using the same criteria as indicated above for longitudinal cracks.

d. **Spalls:** Spalling is defined as a localized pop-out of concrete along the wall of the pipe\culvert generally caused by corrosion of the steel reinforcement or at the edges of longitudinal or circumferential cracks. Spalling may be detected by visual examination of the concrete along the edges of the crack. The person conducting the inspection shall check for possible delamination. If delamination is noted or if a hollow sound is produced when the area is tapped with a device such as a hammer, the pipe\culvert shall be remediated. Remediation methods shall be in accordance with recommendations of the pipe\culvert manufacturer, be acceptable to and authorized by the Engineer before proceeding, and shall be the sole responsibility of the Contractor.

e. **Slabbing:** Any pipe\culvert experiencing slabbing shall be remediated. Slabbing is a structural failure of the pipe\culvert that results from radial or diagonal tension forces in the pipe\culvert. These failures appear as a separation of the concrete from the reinforcing steel near the crown or invert of the pipe\culvert and may span the entire length of a pipe or culvert section (joint to joint). Remediation methods shall be in accordance with recommendations of the pipe or culvert manufacturer, be acceptable to and authorized by the Engineer before proceeding, and shall be the sole responsibility of the Contractor. Where slabbing is of such magnitude that, in the opinion of the Engineer the integrity or service life of the pipe or culvert is severely compromised, the section(s) of pipe or culvert exhibiting such deficiency shall be replaced at the Contractor's expense to the satisfaction of the Engineer.

2. **Thermoplastic Pipe\Culvert:**

a. **Misalignment:** Vertical and horizontal alignment of the pipe culvert or storm drain pipe barrel(s) shall be checked by sighting along the crown, invert and sides of the pipe, and by checking for sagging, faulting and invert heaving. The person assigned by the Contractor to perform the inspection should take into account pipes\culverts laid with a designed

camber or grade change. Horizontal alignment shall be checked for straightness or smooth curvature. Any issues with horizontal and/or vertical alignment shall be noted in the inspection report. If any vertical and/or horizontal misalignment problems are noted in the inspection, a further evaluation will be performed by the Engineer to determine the impact of the misalignment on the joints and wall of the pipe\culvert to ascertain what corrective actions are needed. All corrective actions determined necessary by the Engineer that are a result of the Contractor's negligence, omission or fault shall be the sole responsibility of the Contractor to remedy.

b. **Cracks:** Cracks or splits in the interior wall of the pipe shall be remediated. Remediation methods shall be in accordance with recommendations of the pipe manufacturer, be acceptable to and authorized by the Engineer before proceeding, and shall be the sole responsibility of the Contractor

c. **Joints:** Pipes\culverts showing evidence of crushing at the joints shall be remediated. Differential movement, improper joint sealing, movement or settlement of pipe\culvert sections, and leakage shall be noted in the inspection report. Joint separation of greater than 1 inch shall be remediated. Evidence of soil migration through the joint will be further investigated by the Engineer to determine the level of remedial action required by the Contractor. Remediation methods shall be in accordance with recommendations of the pipe manufacturer, be acceptable to and authorized by the Engineer before proceeding. All corrective actions determined necessary by the Engineer that are a result of the Contractor's negligence, omission or fault shall be the sole responsibility of the Contractor to remedy.

d. **Buckling, bulging, and racking:** Flat spots or dents at the crown, sides or flow line of the pipe due to racking shall be noted in the inspection report and will be evaluated by the Engineer. Areas of wall buckling and bulging shall also be noted in the inspection report and evaluated by the Engineer for corrective action if deemed necessary by the Engineer**.** All corrective actions determined necessary by the Engineer shall be the sole responsibility of the Contractor.

e. **Deflection:** Any one of several methods may be used to measure deflection of thermoplastic pipe\culvert (laser profiler, mandrel, direct manual measure, etc.) If the initial inspection indicates the pipe\culvert has deflected 7.5 percent or more of its original diameter, and if the original inspection was performed using a video camera, then a mandrel test shall also be performed in accordance with VTM 123. All deflections shall be noted in the inspection report. Deflections of less than 5 percent of the original pipe\culvert's diameter shall not require remediation. Deflection of 5 percent up to 7.4 percent will be evaluated by the Engineer. If the pipe\culvert experiences additional defects along with deflection of 5 percent up to 7.4 percent of the original pipe\culvert's diameter, the pipe\culvert shall be remediated. Remediation methods shall be in accordance with recommendations of the pipe\culvert manufacturer, be acceptable to and authorized by the Engineer before proceeding, and shall be the sole responsibility of the Contractor.

If the pipe\culvert is deflected 7.5 percent or greater of the original diameter, the pipe\culvert shall be replaced by the Contractor at his expense to the satisfaction of the Engineer

In lieu of the options noted above for remediation of deflection in thermoplastic pipe\culvert installations, the Contractor may elect to follow the payment schedule below:

Amount of Deflection	**Percent of Payment**
0.0 % TO 5.0%	100% of Unit Bid Price
5.1% to 7.5%	75% of Unit Bid Price
Greater than 7.5%	Remove and Replace at Contractor's Expense

Remediation efforts and payment shall apply to the entire section(s) of the deflected pipe or culvert, joint to joint.

3. **Metal Pipe\Culvert:**

   a. **Misalignment:** Vertical and horizontal alignment of the pipe culvert or storm drain pipe barrel shall be checked by sighting along the crown, invert and sides of the pipe\culvert, and by checking for sagging, faulting and invert heaving. The person assigned by the Contractor to perform the inspection should take into account pipe laid with a designed camber or grade change. Horizontal alignment shall be checked for straightness or smooth curvature. Any issues with horizontal and/or vertical alignment shall be noted in the inspection report for evaluation by the Engineer. If any vertical and/or horizontal misalignment problems are noted in the inspection, further evaluation will be conducted by the Engineer to determine the impact of the misalignment on the joints and wall of the pipe\culvert to ascertain what corrective actions by the Contractor are needed. All corrective actions determined necessary by the Engineer that are a result of the Contractor's negligence, omission or fault shall be the sole responsibility of the Contractor to remedy.
   b. **Buckling, bulging, and racking:** Flat spots or dents at the crown, sides or flow line of the pipe due to racking shall be noted by the Contractor's inspector in the inspection report and will be evaluated by the Engineer for possible remediation by the Contractor. Areas of wall buckling and bulging shall also be noted in the inspection report and evaluated by the Engineer for possible remediation by the Contractor. If the Engineer determines corrective actions are necessary they shall be in accordance with the pipe\culvert manufacturer's recommendations, be acceptable to and authorized by the Engineer prior to implementation and be the sole responsibility of the Contractor.
   c. **Joints: Pipes showing evidence of** crushing at the joints shall be remediated. Differential movement, improper joint sealing, movement or settlement of pipe sections, and leakage shall be noted in the report. Joint separation of greater than 1.0 inch shall be remediated. Evidence of soil migration through the joint will be further investigated by the Engineer to determine the level of remedial action required by the Contractor**.** All corrective actions determined necessary by the Engineer that are a result of the Contractor's negligence, omission or fault shall be the sole responsibility of the Contractor to remedy.

d. **Coating:** Areas of the pipe where the original coating has been scratched, scoured or peeled shall be noted in the inspection report and evaluated by the Engineer to determine the need for immediate repair. If repairs are required they shall be performed by and at the expense of the Contractor in accordance with the recommendations of the pipe\culvert coating manufacturer.

e. **Deflection:** Any one of several methods may be used to measure deflection of metal pipe\culvert (laser profiler, mandrel, direct manual measure, etc.) If the initial inspection indicates the pipe\culvert has deflected 7.5 percent or more of its original diameter, and if the original inspection was performed using a video camera, then a mandrel test shall also be performed in accordance with VTM 123. All deflections shall be noted in the inspection report. Deflections of less than 5 percent of the original pipe\culvert's diameter shall not require remediation. Deflection of 5 percent up to 7.4 percent will be evaluated by the Engineer. If the pipe\culvert experiences additional defects along with deflection of 5 percent up to 7.4 percent of the original pipe\culvert's diameter, the pipe\culvert shall be remediated. Remediation methods shall be in accordance with recommendations of the pipe\culvert manufacturer, be acceptable to and authorized by the Engineer before proceeding, and shall be the sole responsibility of the Contractor.

If the pipe\culvert is deflected 7.5 percent or greater of the original diameter, the pipe shall be replaced by the Contractor at his expense to the satisfaction of the Engineer

In lieu of the options noted above for remediation of metal pipe\CULVERT, the Contractor may elect to follow the payment schedule below:

Amount of Deflection	**Percent of Payment**
0.0 % TO 5.0%	100% of Unit Bid Price
5.1% to 7.5%	75% of Unit Bid Price
Greater than 7.5%	Remove and Replace at Contractors Expense

Remediation efforts and percentage of payment shall apply to the entire section(s) of the deflected pipe or culvert, joint to joint.

Section 302.04 Measurement and Payment is amended to add the following:

Post installation inspection shall be measured and paid for at the contract unit price per linear foot. This price shall include performing visual and video camera inspection(s), preparing and furnishing documentation to include narratives and video media in accordance with the requirements herein and VTM 123.

The cost of the remedial measures (including removal and replacement of the pipe, if necessary) and the re-inspection of the remediated pipe necessitated as a result of the Contractor's negligence, omission or fault shall be the contractual and financial responsibility of the Contractor.

Payment will be made under:

Pay Item	**Pay Unit**
Post installation inspection	Linear Foot

VIRGINIA DEPARTMENT OF TRANSPORTATION
2007 ROAD AND BRIDGE SUPPLEMENTAL SPECIFICATIONS

SUPPLEMENTAL SECTION 303—EARTHWORK

SECTION 303—EARTHWORK of the Specifications is amended as follows:

Section 303.02—Materials is amended to add the following:

(e) **Seed** shall conform to Section 244.02(c) of the Specifications.

Section 303.03—Erosion and Siltation Control is amended to replace the second paragraph the following:

Erosion and siltation control devices and measures shall be maintained in a functional condition at all times. Temporary and permanent erosion and siltation control measures shall be inspected in accordance with the requirements of Section 107.16(a) of the Specifications. Deficiencies shall be immediately corrected. The Contractor shall make a daily review of the location of silt fences and filter barriers to ensure that they are properly located for effectiveness. Where deficiencies exist, corrections shall be made immediately as approved or directed by the Engineer.

Section 303.03(b) **Soil Stabilization** is amended to replace the last paragraph with the following:

Areas that cannot be seeded because of seasonal or adverse weather conditions shall be mulched to provide some protection against erosion to the soil surface. Mulch shall be applied in accordance with the requirements of Section 603.03(e) of the Specifications and paid for in accordance with the requirements of Section 603.04 of the Specifications. Organic mulch shall be used, and the area then seeded as soon as weather or seasonal conditions permit in accordance with the requirements of Section 603.03 of the Specifications. Organic mulch includes: straw or hay, fiber mulch, wood cellulose, or wood chips conforming to the requirements of Section 244.02(g) of the Specifications.

Section 303.03(f) **Sediment Traps and Sediment Basins** is replaced with the following:

(f) **Sediment Traps and Sediment Basins:** Sediment traps shall be utilized where the storm water runoff from disturbed areas is comprised of flow from a total drainage area of less than 3 acres. Sediment basins shall be utilized where the storm water runoff from disturbed areas is comprised of flow from a total drainage area of 3 or more acres. Once a sediment trap or basin is constructed, the dam and all outfall areas shall be stabilized immediately.

Section 303.03—Erosion and Siltation Control is amended to add the following:

(h) **Temporary Diversion Dike:** This work shall consist of constructing temporary diversion dikes at the locations designated on the plans and in accordance with the plan details and the Specifications, stabilizing with seed and mulch, maintaining, removing when no longer required, and restoration of the area.

Temporary diversion dikes shall be installed as a first step in land-disturbing activities and shall be functional prior to upslope land disturbance. The dike shall be constructed to prevent failure in accordance with Section 303.04 of the Specifications. Seeding and mulch shall be applied to the dike in accordance with Section 603 of the Specifications immediately following its

construction. The dikes should be located to minimize damages by construction operations and traffic.

The Contractor shall inspect the temporary diversion dikes after every storm and repairs made to the dike, flow channel, outlet, or sediment trapping facility, as necessary. Once every two weeks, whether a storm event has occurred or not, the measure shall be inspected and repairs made if needed. Damages to the dikes caused by construction traffic or other activity must be repaired before the end of the working day.

Section 303.06(e)**—Erosion Control Items** is amended to replace "4. **Check dams**" with the following:

4. **Check dams** will be paid for at the contract unit price per each. This price shall include furnishing, excavating, constructing, maintaining, repositioning as may be required during construction and removing the check dams if, or when, no longer required.

   Synthetic check dams may be substituted for Type II Rock Check dams (Standard EC-4) at no additional cost to the Department.

Section 303.06(e)**—Erosion Control Items** is amended to replace "6. **Geotextile fabric**" with the following:

6. **Geotextile fabric** attached to brush barriers or existing fence or used for another function specified on the plans will be measured in square yards, complete-in-place, excluding laps, and will be paid for at the contract unit price per square yard. This price shall include trimming the brush barrier; furnishing, installing, maintaining, and removing the fabric; and dressing and stabilizing the area.

   The brush barrier will not be measured for separate payment. The cost thereof shall be included in the price for clearing and grubbing.

Section 303.06(e)**—Erosion Control Items** is amended to replace "15. **Drop Inlet Silt Trap**" and its corresponding Pay Item and Pay Unit with the following:

15. **Inlet protection:**

    a. **Inlet Protection Type A** will be measured in units of each and will be paid for at the contract unit price per each location shown or specified. The price shall include furnishing and installing temporary filter barrier including posts and top rails, coarse aggregate and, if required, sediment forebay. This price shall also include maintenance and removal until no longer required. Inlet Protection Type A will be paid for only one time during the duration of the project.

    b. **Inlet Protection Type B** will be measured in units of each and will be paid for at the contract unit price per each location shown or specified. The price shall include furnishing and installing hardware mesh cloth, concrete blocks, wooden studs, coarse aggregate, and maintenance and removal until no longer required. Inlet Protection Type B will be paid for only one time during the duration of the project.

    c. **Inlet Protection Type C** will be measured and paid for in accordance with the individual pay items and pay units shown in the Standard Drawing for EC-6, Type C. The individual pay items for Inlet Protection Type C will be paid for only one time during the duration of the project for each location shown or specified.

Payment will be made under:

Pay Item	**Pay Unit**
Inlet protection Type A	Each
Inlet protection Type B	Each

Section 303.06(e)**—Erosion Control Items** is amended to add the following:

18. **Temporary diversion dike** will be measured in linear feet, complete-in-place, and will be paid for at the contract unit price per linear foot. This price shall be full compensation for installing the diversion dike, stabilizing with seed and mulch, maintaining, removing when no longer required, and restoration of the area.

    Payment will be made under:

Pay Item	**Pay Unit**
Temporary diversion dike	Linear foot

VIRGINIA DEPARTMENT OF TRANSPORTATION
2007 ROAD AND BRIDGE SUPPLEMENTAL SPECIFICATIONS

SUPPLEMENTAL SECTION 304—CONSTRUCTING DENSITY CONTROL STRIPS

SECTION 304—CONSTRUCTING DENSITY CONTROL STRIPS of the Specifications is amended as follows:

Section 304.04—Procedures is amended to replace the second paragraph with the following:

One control strip shall be constructed at the beginning of work on each roadway and shoulder course and each lift of each course. An additional control strip shall be constructed when a change is made in the type or source of material or whenever a significant change occurs in the composition of the material from the same source. For subgrade and subbase materials, the maximum theoretical density from either one-point proctor test (VTM-12) or three point proctor tests (VTM-1) may be used in lieu of constructing a control strip, at the discretion of the Engineer.

VIRGINIA DEPARTMENT OF TRANSPORTATION
2007 ROAD AND BRIDGE SUPPLEMENTAL SPECIFICATIONS

SUPPLEMENTAL SECTION 315—ASPHALT CONCRETE PLACEMENT

SECTION 315—ASPHALT CONCRETE PAVEMENT of the Specifications is amended as follows:

The Table of Contents for the 2007 Road and Bridge Specifications is revised to rename **SECTION 315—ASPHALT CONCRETE PAVEMENT** as **SECTION 315—ASPHALT CONCRETE PLACEMENT**.

Section 315.01—Description is replaced with the following:

This work shall consist of constructing one or more courses of asphalt concrete on a prepared foundation in accordance with the requirements of these specifications and within the specified tolerances for the lines, grades, thicknesses, and cross sections shown on the plans or as established by the Engineer. At the Contractor's option, the asphalt concrete mix may be produced using a warm-mix additive or process approved by the Department. When used, the temperature placement limitations for Warm Mix Asphalt (WMA) shall be applied.

Section 315.02(b) **Asphalt for tack coat and prime coat** is replaced with the following:

Asphalt for Tack Coat shall conform to the special provision titled "Nontracking Tack Coat." Asphalt for Prime Coat shall conform to the requirements in Section 310 of the Specifications. Asphalt for prime coat may be changed by one viscosity grade by the Engineer at no change in the contract unit price.

Section 315.02(d) **Liquid asphalt coating (emulsion) for rumble strip** is replaced with the following:

(d) **Liquid asphalt coating (emulsion) for rumble strip** shall conform to the requirements of Section 210 of the Specifications. For centerline rumble strips, CSS-1h or CQS-1h conforming to Section 210 of the Specifications shall be used. The CSS-1h or CQS-1h may be diluted by up to 30 percent at the emulsion manufacture's facility.

Section 315.03(a) **Hauling Equipment** is replaced with the following:

(a) **Hauling Equipment:** Trucks used for hauling asphalt mixtures shall have tight, clean, smooth metal or other non-absorptive/inert material bodies equipped with a positive locking metal tailgate. Surfaces in contact with asphalt mixtures shall be given a thin coat of aliphatic hydrocarbon invert emulsion release agent (nonpuddling), a lime solution, or other material on the Department's list of approved release agents. Except where a nonpuddling release agent is used, the beds of dump trucks shall be raised to remove excess agent prior to loading. Only a nonpuddling agent shall be used in truck beds that do not dump. Each truck shall be equipped with a tarpaulin or other cover that will protect the mixture from moisture and foreign matter and prevent the rapid loss of heat during transportation.

Section 315.03—Equipment is amended by adding the following:

(e) **Material Transfer Vehicle (MTV):** When required in the Contract, a MTV shall be a self-propelled storage unit capable of receiving material from trucks, storing the material and transferring the material from the unit to a paver hopper insert via a conveyor system. The required paver hopper insert and unit shall have a combined minimum storage capacity of

15 tons. Prior to placing the asphalt material on the roadway surface, the storage unit or paver hopper insert must be able to remix the material in order to produce a uniform, non-segregated mix, having a uniform temperature.

Section 315.04—Placement Limitations is replaced with the following:

Asphalt concrete mixtures shall not be placed when weather or surface conditions are such that the material cannot be properly handled, finished, or compacted. The surface upon which asphalt mixtures are to be placed shall be free of standing water, dirt, and mud and the base temperature shall conform to the following:

(a) **Asphalt Concrete Produced with Warm Mix Asphalt Additives or Processes:**

1. **When the base temperature is 40 degrees F and above**, laydown will be permitted at any temperature below the maximum limits given in Section 211.08 of the Specifications.

2. **When the laydown temperature is between 301 degrees F and 325 degrees F**, the number of compaction rollers will be the same number as required for 300 degrees F or less.

(b) **Asphalt Concrete Produced without Warm Mix Asphalt Additives or Processes:**

1. **When the base temperature is above 80 degrees F,** mixture laydown will be permitted at any temperature conforming to the limits specified in Section 211 of the Specifications.

2. **When the base temperature is between 40 degrees F and 80 degrees F**, the Nomograph, Table III-2, shall be used to determine the minimum laydown temperature of the asphalt concrete mixes. At no time should the minimum base temperature for base (BM) and intermediate (IM) mixes be less than 40 degrees F. At no time should the minimum laydown temperature for base (BM) and intermediate (IM) mixes be less than 250 degrees F.

   For surface mixes (SM), at no time should the minimum base and laydown temperatures be less than the following:

PG Binder/Mix Designation	Percentage of Reclaimed Asphalt Pavement (RAP) Added to Mix	Minimum Base Temperature	Minimum Placement Temperature
PG 64-22 (A)	<=25%	40 ºF	250 ºF
PG 64-22 (A)	>25%	50 ºF	270 ºF
PG 70-22 (D)	<=30%	50 ºF	270 ºF
PG 76-22 (E)	<=15%	50 ºF	290 ºF
PG 64-22 (S)	<=30%	50 ºF	290 ºF

(3) **When the laydown temperature is between 301 degrees F and 325 degrees F,** the number of compaction rollers will be the same number as required for 300 degrees F.

Intermediate and base courses that are placed at rates of application that exceed the application rates shown in Table III-2 shall conform to the requirements for the maximum application rate shown for 8-minute and 15-minute compaction rolling as per number of rollers used.

Should the Contractor be unable to complete the compaction rolling within the applicable 8-minute or 15-minute period, the placing of asphalt mixture shall either cease until sufficient rollers are used or other corrective action is taken to complete the compaction rolling within the specified period.

Compaction rolling shall be completed prior to the mat cooling down to 175 degrees F. Finish rolling may be performed at a lower mat temperature.

The final asphalt pavement finish course shall not be placed until construction pavement markings are no longer required.

Section 315.05(b) **Conditioning Existing Surface** is replaced with the following:

(b) **Conditioning Existing Surface:** When the surface of the existing pavement or base is irregular, it shall be brought to a uniform grade and cross section as directed by the Engineer. The surface on which the asphalt concrete is to be applied shall be prepared in accordance with the requirements of the applicable specifications and shall be graded and compacted to the required profile and cross section.

When specified, prior to placement of asphalt concrete, longitudinal and transverse joints and cracks shall be sealed by the application of an approved crack sealing material per special provision titled "Sealing Cracks in Asphalt Concrete Surfaces or Hydraulic Cement Concrete Pavement".

Contact surfaces of curbing, gutters, manholes, and other structures projecting into or abutting the pavement and cold joints of asphalt shall be painted with a thick, uniform coating of asphalt prior to placement of asphalt mixture.

A tack or prime coat of asphalt will be required as specified below and shall conform to the applicable requirements of Section 311 of the Specifications or the special provision titled "Nontracking Tack Coat". Asphalt classed as cutbacks or emulsions shall be applied ahead of the paving operations, and the time interval between applying and placing the paving mixture shall be sufficient to ensure a tacky residue providing maximum adhesion of the paving mixture to the base. The mixture shall not be placed on tack or prime coats that have been damaged by traffic or contaminated by foreign material. Traffic shall be excluded from such sections.

1. **Priming and Tacking:**

a. **Priming aggregate base or subbase:** Unless otherwise specified in the contract documents, priming with asphalt material will not be required on aggregate subbase or base material prior to the placement of asphalt base, intermediate or surface layers.

b. **Tacking:** Application of tack at joints, adjacent to curbs, gutters, or other appurtenances, shall be applied with a hand wand or with spray bar at the rate of 0.2 gallon per square yard. At joints, the tack applied by the hand wand or a spray bar shall be 2 feet in width with 4 to 6 inches protruding beyond the joint for the first pass. Tack for the adjacent pass shall completely cover the vertical face of the mat edge, so that slight puddling of asphalt occurs at the joint, and extend a minimum of 1 foot into the lane to be paved.

Milled faces that are to remain in place shall be tacked in the same way for the adjacent pass. Use of tack at the vertical faces of longitudinal joints will not be required when paving in echelon.

On rich sections or those that have been repaired by the extensive use of asphalt patching mixtures, the tack coat shall be eliminated when directed by the Engineer.

Tack shall not be required atop asphalt stabilized open-graded material drainage layers.

Tack shall be applied between the existing asphalt surface and each asphalt course placed thereafter.

2. **Removing depressions and elevating curves:** Where irregularities in the existing surface will result in a course more than 3 inches in thickness after compaction, the surface shall be brought to a uniform profile by patching with asphalt concrete and thoroughly tamping or rolling until it conforms with the surrounding surface. The mixture used shall be the same as that specified for the course to be placed.

   When the Contractor elects to conduct operations to eliminate depressions, elevate curves, and place the surface course simultaneously, he shall furnish such additional spreading and compacting equipment as required to maintain the proper interval between the operations.

Section 315.05(c) **Placing and Finishing** is amended to replace the second paragraph with the following:

A continuous line to mark the edge of pavement and provide proper control of pavement width and horizontal alignment will not be required for this contract.

And to add the following paragraphs:

Prior to application of tack coat and commencement of paving operations the Contractor shall clean the existing pavement surface of all accumulated dust, mud, or other debris that may affect the bond of the new overlay, as determined by the Engineer. The Contractor shall ensure the surface remains clean until commencement and during paving operations. The cost for cleaning and surface preparation shall be included in the bid price for asphalt concrete.

When required in the Contract, a MTV shall be used during the placement of designated asphalt mixes on full lane width applications.

Section 315.05(c) **Placing and Finishing** is amended to replace the fifth paragraph with the following:

The Contractor shall have a certified Asphalt Field Level II Technician present during all paving operations. Immediately after placement and screeding, the surface and edges of each layer shall be inspected by the Asphalt Field Level II Technician to ensure compliance with the asphalt placement requirements and straightedged to ensure uniformity and smoothness. The Asphalt Field Level II Technician and shall make necessary corrections, if necessary, prior to compaction. The finished pavement shall be uniform and smooth.

The **C**ontractor's Asphalt Field Level II Technician shall be present during all density testing.

Section 315.05(d) **Compacting** is amended by replacing the fifth paragraph with the following:

Rolling shall begin at the sides and proceed longitudinally parallel with the center of the pavement, each trip overlapping at least 6 inches, gradually progressing to the crown of the pavement. When abutting a previously placed lane, rolling shall begin at the outside unconfined side and proceed toward the previously placed lane. On superelevated curves, rolling shall begin at the low side and proceed to the high side by overlapping of longitudinal trips parallel with the centerline.

Section 315.05(e) is replaced with the following:

(e) **Density:** Density shall be determined in accordance with the following:

1. The Contractor shall perform roller pattern and control strip density testing on surface, intermediate, and base courses in accordance with the requirements of VTM-76. The Contractor shall have a certified Asphalt Field Technician perform all density testing.

   Density shall be determined with a thin-lift nuclear gauge conforming to the requirements of VTM-81 or from the testing of plugs/cores taken from the roadway where the mixture was placed. Density test locations shall be marked and labeled in accordance with the requirements of VTM-76. When acceptance testing is performed with a nuclear gauge, the Contractor shall have had the gauge calibrated within the previous 12 months by approved calibration service. In addition, the Contractor shall maintain documentation of such calibration service for the 12-month period from the date of the calibration service. The required density of the compacted course shall not be less than 98.0 percent and not more than 102.0 percent of the target control strip density.

   Nuclear density roller pattern and control strip density testing shall be performed on asphalt concrete overlays placed directly on surface treatment roadways and when overlays are placed at an application rate less than 125 pounds per square yard, based on 110 pounds per square yard per inch, on any surface. In these situations, sawed plugs or core samples will not be required and the minimum control strip densities as specified in Table III-3 will be waived. The required density of the compacted course shall be not less than 98.0 percent and not more than 102.0 percent of the target control strip.

TABLE III-3
Density Requirements

Mixture Type	Min. Control Strip Density (%)[1]
SM-9.5A, 12.5A	92.5
SM-9.5D, 12.5D	92.2
SM-9.5E, 12.5E	92.2
IM-19.0A, IM-19.0D, IM-19.0E	92.2
BM-25.0A, BM-25.0D	92.2

[1]The control strip density requirement is the percentage of theoretical maximum density of the job-mix formula by SUPERPAVE mix design or as established by the Engineer based on two or more production maximum theoretical density tests.

The project will be divided into "control strips" and "test sections" by the Engineer for the purpose of defining areas represented by each series of tests.

a. Control Strip: Control strips shall be constructed in accordance with the requirements of these specifications and VTM-76.

The term *control strip density* is defined as the average of 10 determinations selected at stratified random locations within the control strip.

One control strip shall be constructed at the beginning of work on each roadway and shoulder course and on each lift of each course. An additional control strip shall be constructed when a change is made in the type or source of materials; whenever a significant change occurs in the composition of the material being placed from the same source; or when there is a failing test strip. During the evaluation of the initial control strip, paving operations may continue. However, paving and production shall be discontinued during construction and evaluation of additional control strips. In the event that two consecutive control strips fail, subsequent paving operations shall cease until corrective action(s) has been taken with the approval of the Engineer. If it is determined with the Engineer's approval that the density cannot be obtained because of the condition of the existing pavement structure, the target control strip density shall be determined from the roller pattern that achieves the optimum density and shall be used on the remainder of the roadway that exhibits similar pavement conditions.

Either the Engineer or Contractor may initiate an additional control strip at any time.

The length of the control strip shall be approximately 300 feet and the width shall not be less than 6 feet. On the first day of construction or beginning of a new course, the control strip shall be started between 500 and 1,000 feet from the beginning of the paving operation. The control strip shall be constructed using the same paving, rolling equipment, procedures, and thickness as shall be used on the remainder of the course being placed.

One reading shall be taken at each of 10 stratified random locations. No determination shall be made within 12 inches of the edge of any application width for surface and intermediate mixes or within 18 inches of the edge of any application width for base mixes. The average of these 10 determinations shall be the control strip density recorded to the nearest 0.1 pound per cubic foot. The minimum control strip density shall be determined in accordance with the requirements of VTM-76.

The control strip shall be considered a lot. If the control strip density conforms to the requirements specified in Table III-3, the control strip will be acceptable and the control strip density shall become the target control strip density. If the density does not conform to the requirements specified in Table III-3, the tonnage placed in the control strip and any subsequent paving prior to construction of another control strip will be paid for in accordance with Table III-4 on the basis of the percentage of the Table III-3 value achieved. The Contractor shall take corrective action(s) to comply with the density requirement specified in Table III-3.

TABLE III-4
Payment Schedule for Lot Densities

% of Target Control Strip Density	% of Payment
Greater than 102.0	95
98.0 to 102.0	100

97.0 to less than 98.0	95
96.0 to less than 97.0	90
Less than 96.0	75

b. **Test section (lot):** For the purposes of acceptance, each day's production shall be considered a lot unless the paving length is less than 3,000 linear feet or greater than 7,500 linear feet. When paving is less than 3,000 feet, it shall be combined with the previous day's production or added to the next day's production to create a lot as described below.

The standard size of a lot shall be 5,000 linear feet, with 1,000 foot sublots, of any pass 6 feet or greater made by the paving train for the thickness of the course. Upon approval by the Engineer, the lot size may be increased to 7,500 linear foot lots with 1,500 foot sublots when the normal daily production is in excess of 7,000 feet. Pavers traveling in echelon will be considered as two passes. When a partial lot occurs at the end of a day's production or upon completion of the project, the lot size shall be redefined as follows:

- If the partial lot contains one or two sublots, the sublots will be added to the previous lot.

- If the partial lot contains three or four sublots, the partial lot will be redefined to be an entire lot.

Each lot shall be tested for density by taking a nuclear density reading from two random test sites selected by the Engineer within each sublot or a single test site when sawn cores are used for acceptance. Test sites shall not be located within 12 inches of the edge of any application width for surface and intermediate mixes or within 18 inches of the edge of any application width for base mixes.

The average of the sublot density measurements will be compared to the target nuclear density, or for cores the target percent of theoretical maximum density achieved, established on the control strip to determine the acceptability of the lot. Once the average density of the lot has been determined, the Contractor will not be permitted to provide additional compaction to raise the average. If two consecutive sublots produce density results less than 98 percent or more than 102 percent of the target control strip density, the Contractor shall immediately notify the Engineer and institute corrective action. At each test site in the sublot, the Longitudinal Joints shall also be tested for density using a nuclear density gauge. For surface and intermediate mixes, the gauge shall be placed within 4 inches of the joint. For base mixes, the gauge shall be placed within 6 inches of the joint. The gauge shall not be placed over top of the joint. The joint density value shall be recorded. If a single longitudinal joint density reading is less than 95 percent of the target control strip density, the Contractor shall institute corrective action. The values obtained from the joint readings will not be used in payment calculation. By the end of the day's operations, the Contractor shall furnish the test data developed during the day's paving to the Engineer.

When sawn cores are used for density acceptance: The Contractor shall perform acceptance testing for density for each sublot by obtaining one

sawed 4 inch by 4 inch specimen, or one 4-inch-diameter cores, at a single random test site specified by the Engineer.

- The sub-lot site shall be marked as described in VTM-76.
- The bulk specific gravity of the cores shall be determined in accordance with VTM-6.
- The density of the cores shall be determined in accordance with the requirements of VTM-22.

Cores or plugs shall be bulked in the presence of the Department. The Department reserves the right to have the cores or plugs bulked on the project site. Sublot test sites shall be numbered sequentially per lot, marked on the pavement, filled with the paving mixture, and compacted prior to completion of each day of production.

The tonnage of each lot will be based on the lot's width and length and the mixture application rate as designated in the Contract or as revised by the Engineer. Payment will be made in accordance with the requirements of Table III-4.

The Engineer at any time on any project may perform lot density verification testing. Lot density verification is performed by testing plugs. The Contractor shall be responsible for taking plugs for testing. Testing of the plugs will be done by the Engineer.

Surface, Intermediate, and Base mixes:

Two plugs shall be taken by the Contractor per Verification, Sampling and Testing (VST) lot at locations identified by the Engineer. If the density of the plugs does not conform to the requirements for the lot in question or the same payment percentage determined by the Contractor's testing for that lot, then the Contractor may request the referee procedure to be invoked. One additional plug from the remaining sublots will be taken. Payment for that lot, based on the results of the initial two plugs/cores or referee procedure, will be in accordance with the specifications in Table III-4 on the basis of the percentage of the control strip bulk density achieved.

2. **Surface, intermediate, and base courses** not having a sufficient quantity of material to run a roller pattern and control strip shall be compacted to a minimum density of 91.5 percent of the theoretical maximum density as determined in accordance with the requirements of VTM-22. The Contractor shall be responsible for cutting cores or sawing plugs for testing by the Department. One set of plugs/cores shall be obtained within the first 20 tons of small quantity paving and every 100 tons thereafter for testing by the Contractor or the Department. Core/plug locations shall be randomly selected. If the density is less than 91.5 percent, payment will be made in accordance with the requirements of Table III-5.

TABLE III-5

Payment Schedule for Surface, Intermediate and Base Courses (Not sufficient quantity to perform density roller pattern and control strip)

% TMD	% of Payment
Greater than 91.5	100
90.2-91.4	95
88.3-90.1	90
Less than 88.2	75

Any section in which a mixture (e.g., SM-9.0) is being placed at an application rate of less than 125 pounds per square yard, based on 110 pounds per square yard per inch, that does not have a sufficient quantity of material for a roller pattern and control strip shall be compacted by rolling a minimum of three passes with a minimum 8-ton roller. No density testing will be required.

For asphalt patching, the minimum density of 91.5 percent of the maximum theoretical density will be determined in accordance with the requirements of VTM-22. The Contractor is responsible for cutting cores or sawing plugs. One set of plugs/cores shall be obtained within the first 20 tons of patching material and every 500 tons thereafter for testing by the Contractor or the Department. Core/plug locations shall be randomly selected. If the density is less than the 91.5 percent, payment will be made on the tonnage within the 20 or 500 ton lot in accordance with the requirements of Table III-5 of the Specifications.

Section 315.05(g) **Rumble Strips** is amended to replace fourth paragraph with the following:

Following the cutting and cleaning of the depressions of waste material, the entire rumble strip area shall be coated with liquid asphalt coating (emulsion) using a pressure distributor. For rumble strips installed on the shoulder, the approximate application rate shall be 0.1 gallons per square yard. For rumble strips installed in a new asphalt concrete surface (new construction or overlay) along the centerline, no sealing of the rumble strip area shall be performed. When the rumble strip is installed along the centerline in an existing asphalt concrete surface (i.e. more than one year since placement), the approximate application rate shall be 0.05 gallons per square yard. The application temperature shall be between 160 degrees F and 180 degrees F. For shoulder rumble strips only, overspray shall not extend more than 2 inches beyond the width of the cut depressions and/or shall not come in contact with pavement markings.

Section 315.07(c) **Thickness Tolerance** is replaced with the following:

(c) **Thickness Tolerance:** The thickness of the base course will be determined by the measurement of cores as described in VTM-32.

Acceptance of asphalt concrete base course for depth will be based on the mean result of measurements of samples taken from each lot of material placed. A *lot* of material is defined as the quantity being tested for acceptance except that the maximum lot size will be 1 mile of 24-foot-width base course.

A lot will be considered acceptable for depth if the mean result of the tests is within the following tolerance of the plan depth for the number of tests taken:

Plan Depth	1 test	2 tests	3 tests	4 tests
≤ 4"	0.6"	0.5"	0.4"	0.3"
>4." ≤8"	0.9"	0.7"	0.5"	0.4"
>8"≤12"	1"	0.9"	0.7"	0.5"
>12"	1.2"	1"	0.8"	0.6"

If an individual depth test exceeds the one test tolerance for the specified plan depth, that portion of the lot represented by the test will be excluded from the lot. If an individual test result indicates that the depth of material represented by the test is more than the tolerance for one test, the Contractor will not be paid for that material in excess of the tolerance throughout the length and width represented by the test. If an individual test result indicates that the depth of the material represented by the test is deficient by more than the one test tolerance for the plan depth, correction of the base course represented by the test shall be made as specified hereinafter.

If the mean depth, based on two or more tests, of a lot of material is excessive (more than the plan depth), the Contractor will not be paid for that material in excess of the tolerance throughout the length and width represented by the tests.

If the mean depth, based on two or more tests, of a lot of material is deficient (less than the plan depth) by more than the allowable tolerance, the Contractor will be paid for the quantity of material that has been placed in the lot. Any required corrective action will be determined by the Engineer.

For excessive depth base courses, the rate of deduction from the tonnage allowed for payment as base course will be calculated at a weight of 115 pounds per square yard per inch of depth in excess of the tolerance. For sections of base course that are deficient in depth by more than the one test tolerance and less than two and half times the one test tolerance, the Contractor shall furnish and place material specified for the subsequent course to bring the base course depth within the tolerance. This material will be measured on the basis of tonnage actually placed, determined from weigh tickets, and paid for at the contract unit price for the base course material. Such material shall be placed in a separate course. If the deficiency is more than two and half times the one test tolerance, the Contractor shall furnish and place base course material to bring the base course thickness within the tolerance. Corrections for deficient base course depth shall be made in a manner to provide a finished pavement that is smooth and uniform. Sections requiring significant grade adjustments which have been previously identified and documented by the Engineer as being outside of the control of the Contractor will be exempt from deduction or corrective action.

When the Contract provides for the construction or reconstruction of the entire pavement structure, the surface and intermediate courses shall be placed at the rate of application shown on the plans within an allowable tolerance of ±5 percent of the specified application rate for application rates of 100 pounds per square yard or greater and within 5 pounds per square yard for application rates of less than 100 pounds per square yard. The amount of material exceeding the allowable tolerance will be deducted from the pay quantities.

When the Contract provides for the placement of surface or intermediate courses over existing pavement, over pavements constructed between combination curb and gutter, or in the construction or reconstruction of shoulders, such courses shall be placed at the approximate rate of application shown on the plans. However, the specified rate of application shall be altered where necessary to produce the required riding quality.

Section 315.08—Measurement and Payment is amended to include the following:

Material Transfer Vehicle (MTV), when required in the Contract, will not be measured for separate payment. The cost for furnishing and operating the MTV shall be included in the price bid for other appropriate items.

Warm Mix Asphalt (WMA) additive or process will not be measured for separate payment, the cost of which, shall be included in the price bid for other appropriate items.

VIRGINIA DEPARTMENT OF TRANSPORTATION
SPECIAL PROVISION FOR
HOT MIX ASPHALT PATCHES

December 28, 2006

I. DESCRIPTION

This work shall consist of repairing specified sections of existing flexible or existing composite pavements by removing all or part of the defective materials in the sections and replacing them with hot mix asphalt (HMA) paving material. The locations of the repairs will be specified in the Contract document and specific locations as directed by the Engineer.

II. SCOPE OF WORK

Patching repair shall consist of the removal of areas of unsound pavement material as determined by the Engineer and replaced with hot mix asphalt (HMA).

III. MATERIALS

All hot mix asphalt (HMA) shall conform to the requirements of Section 211 of the specifications.

IV. PROCEDURES

Asphalt patches shall be placed in accordance with the requirements of Section 315 of the Specifications. The existing pavement shall be removed with a minimum disturbance to the aggregate base material and the faces of the remaining pavement shall be cut to a smooth, vertical face without ragged edges.

The existing pavement shall be removed by milling, grinding, saw cutting or any other approved method to the specified depth for the full perimeter of the designated area**.** A tack coat of CRS-2 (or other asphalt material approved by the Engineer) at a rate of 0.2 gallon per square yard shall be applied to surface and vertical faces of exposed asphalt concrete. Exposed base aggregate shall be primed with liquid asphalt CRS-2 at an application rate of 0.4 gallon per square yard. Where concrete is encountered prior to reaching the specified depth, the depth of the patch shall then be limited to the top elevation of the concrete. Prior to application of the patch, the bottom of the excavation of all patches shall be cleaned of all loose and foreign materials and stabilized by hand or mechanical tamping.

Manual placement will be permitted for installation of the HMA. Control strip and pavement profile measurements will be waived. Variation between surfaces at the run on and run off joints shall not be more than 1/4 inch when tested with a 10-foot straight edge.

The existing pavement materials that are removed shall be hauled away from the repair site immediately, and disposed of properly by the Contractor in accordance with Section 106.04 of the Specifications.
Minimum and maximum lift thickness for patching with HMA Superpave mixes shall be maintained during construction of the patches in conformance with the following:

HMA SUPERPAVE LIFT THICKNESS (PATCHING)

MIX TYPE	MINIMUM (in.)	MAXIMUM (in.)	RECOMMENDED (in.)
SM-9.0	0.75	1.5	1.0
SM-9.5	1.25	2.0	1.5
SM-12.5	1.5	2.0	1.75
IM-19.0	2.0	3.0	2.0
BM-25.0	2.5	4.0	3.0

V. MEASUREMENT AND PAYMENT

Asphalt concrete patching will be measured and paid for at the contract unit price per square yard of pavement surface for the mix and depth specified. The payment shall be full compensation for furnishing materials and installing pavement patches complete in place. The work shall include, but not be limited to supplying materials, saw cutting, milling, grinding, removing and disposing of existing material, the cost to haul and place asphalt concrete, and all labor, equipment, tools, supervision, fuel and incidentals necessary to complete the work.

Liquid Asphalt tack or prime will not be measured for separate payment and the cost thereof to furnish and apply the liquid asphalt shall be included in the bid price for patching.

Payment will be made under:

Pay Item	Pay Unit
Asphalt Concrete Patch (Depth)	Square Yard

VIRGINIA DEPARTMENT OF TRANSPORTATION
2007 ROAD AND BRIDGE SUPPLEMENTAL SPECIFICATIONS

SUPPLEMENTAL SECTION 401—STRUCTURE EXCAVATION

SECTION 401—STRUCTURE EXCAVATION of the Specifications is amended as follows:

Section 401.02(a) **Backfill** is replaced with the following:

(a) **Earthen or other backfill** shall be approved by the Engineer and shall be free from large or frozen lumps, wood, or rocks more than 3 inches in their greatest dimension or other extraneous material. Porous backfill shall conform to the requirements of Section 204.02(c) or as specified herein.

Section 401.03(i) **Backfilling** is replaced with the following:

(i) **Backfilling:** Excavated spaces that are not occupied by wingwalls, abutments, piers, or other permanent work not specifically addressed herein shall be backfilled with soil to the surface of the surrounding ground.

Select backfill material shall be used behind all abutments. A detail indicating the limits (zone) of the select backfill will be included in the plans on the abutment detail sheet(s). Select backfill material shall be No. 21A or 21 B stone conforming to Section 208 or Select Material Type I, Min. CBR 30 conforming to Section 207 and shall be compacted in accordance with Sections 305 and 303 respectively. The top surface of the backfill material shall be neatly graded.

The earthen fill around the perimeter of the select material zone in abutments, wingwalls, and retaining walls shall be placed in horizontal layers not more than 6 inches in loose thickness and compacted at ±20 percent of optimum moisture to a density of at least 95 percent as compared to the theoretical maximum density as defined in Division I. Tests for compliance with density requirements will be performed in accordance with the requirements of VTM-12. As the work progresses, backfill in front of units shall be placed and compacted in horizontal layers to the same elevation as the layers behind units until the final elevation in front is reached. Backfill shall be placed in a manner to prevent wedging action against the concrete. Slopes bounding excavation for abutments, wingwalls, or retaining walls shall be modified to lock in adjacent backfill material by stepping or serrating the existing soils. Jetting of the fill behind abutments, wingwalls, or retaining walls will not be permitted.

Fills and backfills around piers not included in the roadway prism shall be constructed in uniformly compacted layers and placed alternately to maintain a uniform elevation on both sides of the structure. However, the density requirement will be waived.

Provisions shall be made for the draining of backfill material. Geocomposite Wall Drains shall be used to drain the select backfill material in all abutments. Porous backfill shall be used in to drain backfill material in retaining structures unless otherwise stated on the plans. In the event the Contractor requests to substitute geocomposite wall drain in lieu of porous backfill in retaining structure and the Engineer approves such a request, the geocomposite wall drain shall be provided at no additional cost.

Geocomposite Wall Drains shall meet the requirements of Section 245.03 (f) and shall be installed in accordance with the manufacturer's recommendations. A minimum three (3) inch joint overlap of geotextile fabric at the top, bottom, ends, and at adjoining panels shall

be provided. The geocomposite wall drain shall be connected to an outlet drain pipe or weephole of at least 6 inches in diameter. The outlet drain shall be completely wrapped by the bottom fabric flap of the geocomposite wall drain. The Contractor shall provide a detailed sketch of the outlet drain pipe connection as well as connections to any special drainage systems associated with the structure for the Engineer's approval prior to installation.

Porous backfill for draining backfill material behind retaining structures shall consist of crusher run aggregate, conforming to the requirements of Section 205 unless stated otherwise on the plans. Porous backfill shall be placed at the back of weep holes to extend 18 inches behind the entrance to the hole, 18 inches above the elevation of the bottom of the hole, and 18 inches laterally on each side of the centerline of the hole. Where crushed glass is used as porous backfill, No. 78 and/or No. 8 aggregate and an 18-inch by 18- inch swatch of drainage fabric meeting the requirements of Section 245.03(c) shall be used to cover the #4 mesh at each weep hole opening exposed directly to crushed glass, or as otherwise approved by the Engineer.

Backfill shall not be placed against abutments or wingwalls until concrete has been in place 14 days, exclusive of days on which the average high-low air temperature is below 40 degrees F in the shade or until test cylinders have attained a compressive strength equal to 93 percent of the required 28-day design compressive strength, except in cases where completion of grading in the area in front of an abutment is desired. In those circumstances, backfill and/or fill may be placed against abutments or wingwalls to a point no higher than the elevation necessary to complete grading in front of the abutment, provided:

1. The concrete has been in place 7 days, exclusive of days on which the average high-low air temperature is below 40 degrees F in the shade, or

2. Test cylinders have attained a compressive strength greater than or equal to 900 psi and the concrete has been in place a minimum of 2 days, exclusive of days on which the average high-low air temperature is below 40 degrees F in the shade. The Contractor shall take additional cylinders at the time of concrete placement and use a calibrated machine or an independent lab to test the cylinders and verify the compressive strength prior to backfilling.

Backfill shall be placed as soon as practicable following attainment of the required compressive strength but not later than 30 days after concrete placement. Excavation openings shall be maintained as dry as practicable at the time of backfilling. Backfill shall be placed in a manner to deter impoundment of water and facilitate existing drainage.

Section 401.04—Measurement and Payment is amended to add the following:

Select backfill (Abutment zone) will be measured in tons and paid for at the contract unit price per ton. This price shall include furnishing, placing, compacting and grading backfill material.

Geocomposite Wall Drain will be measured in square yards and will be paid for at the contract unit price per square yard. This price shall include furnishing and placing the wall drain, complete-in-place. Overlaps will not be measured for payment.

Payment will be made under:

Pay Item	Pay Unit
Geocomposite Wall Drain	Square Yard
Select Backfill (Abutment Zone)	Ton

VIRGINIA DEPARTMENT OF TRANSPORTATION
2007 ROAD AND BRIDGE SUPPLEMENTAL SPECIFICATIONS

SUPPLEMENTAL SECTION 404—HYDRAULIC CEMENT CONCRETE OPERATIONS

SECTION 404—HYDRAULIC CEMENT CONCRETE OPERATIONS of the Specifications is amended as follows:

Section 404.02(e) **Prestressed concrete deck panels** is deleted.

Section 404.03(a) **Forms** is amended to replace the first paragraph with the following:

(a) **Forms:** On concrete beam bridges, the Contractor shall have the option of using corrugated metal bridge deck forms or wood forms to form that portion of bridge decks between beams unless otherwise specified on the plans. On steel beam bridges, the Contractor shall have the option of using corrugated metal bridge deck forms or wood forms to form that portion of bridge decks between beams or girders unless otherwise specified on the plans. However, corrugated metal forms shall not be used to form overhangs or portions of slabs where a longitudinal joint occurs between beams or girders.

Section 404.03(a)2 **Prestressed deck panel forms** is deleted.

Section 404.03(j) **Removing Formwork and Forming for and Placing Superimposed Elements** is amended to replace "1. **Formwork**" with the following:

1. **Formwork** may be removed as follows:

   a. **Side forms or elements not immediately subjected to loading** (for example: footings and walls or columns with height to width ratios less than 10:1 [h/w < 10:1]): 48 hours or 30 percent concrete strength (f'_c). For the purposes herein, width will be considered the narrowest portion of the element measured horizontally across its surface.

      The time period noted for form removal shall begin at the completion of the concrete placement and is exclusive of hours when any portion of the surface of the concrete element is below 40 degrees F.

   b. **All other elements** (for example: soffits of pile caps, bent caps and pier caps)**:** 60 percent concrete strength (f'_c).

Section 404.08—Measurement and Payment is amended to replace the second paragraph with the following:

The volume of bridge deck slab concrete allowed for payment will be computed using the actual thickness of the slab, not to exceed the plan thickness plus 1/2 inch, for the area between faces of sidewalks, curb lines, railings, or parapets. The area beneath sidewalks, curbs, railings, or parapets will be based on the plan thickness.

Section 404.08—Measurement and Payment is amended to replace the fourth paragraph with the following:

If corrugated metal bridge deck forms are used in lieu of removable forms, the price for concrete shall include furnishing and placing metal forms, additional concrete required to fill corrugations, work necessary to facilitate inspection of the underside of the deck, repairing deficiencies, and strengthening beams or girders to maintain the design live-load rating of the bridge.

VIRGINIA DEPARTMENT OF TRANSPORTATION
2007 ROAD AND BRIDGE SUPPLEMENTAL SPECIFICATIONS

SUPPLEMENTAL SECTION 405—PRESTRESSED CONCRETE

SECTION 405—PRESTRESSED CONCRETE of the Specifications is amended as follows:

Section 405.02(a) **Concrete** is amended to replace 3. with the following:

3. Fully or partially embedded attachments to the prestressed concrete members required for supporting forms shall be galvanized in accordance with Section 233 of the Specifications.

Section 405.03—Plant Review is amended to replace the first paragraph with the following:

Plants that manufacture precast, prestressed concrete elements shall have PCI certification for applicable product groups and categories except that plants supplying only piles will not be required to be certified. PCI inspection reports shall be on file at the plant and available for review by the Department. Plants that have not previously produced products for the Department will be inspected by the Engineer prior to commencement of production. The Contractor shall provide suitable office space for use by the Engineer's representatives.

Section 405.05(e) **Finishing** is amended to delete the fifth paragraph.

Section 405.05 (h) **Handling, Storing, and Erecting** is amended to replace the fourth paragraph with the following:

Lifting and support points for units other than piles shall be as shown on the plans or not less than 6 inches or more than 2/3 of the depth of the unit from the end of the unit. Piles shall be supported and lifted at points shown on the plans. The Contractor shall be responsible for the design and safety of the lifting device used.

Section 405.05(h) **Handling, Storing and Erecting** is amended to add the following:

Continuity diaphragms for prestressed beams shall not be cast until at least 90 days after the strands in the beams have been detensioned.

Section 405.06(c) **Prestressed Deck Panels** is deleted.

Section 405.07—Measurement and Payment is amended to delete the "**Prestressed concrete panels**" paragraph, pay item and pay unit.

VIRGINIA DEPARTMENT OF TRANSPORTATION
2007 ROAD AND BRIDGE SUPPLEMENTAL SPECIFICATIONS

SUPPLEMENTAL SECTION 406—REINFORCING STEEL

SECTION 406—REINFORCING STEEL is completely replaced by the following:

406.01—Description

This work shall consist of furnishing; coating, if required; and placing reinforcing steel or wire mesh used in concrete operations, except prestressed strands and wires, in accordance with these specifications and in conformity to the lines and details shown on the plans.

406.02—Materials

(a) **Steel used for reinforcement** shall conform to the requirements of Section 223 of the Specifications. Except for spiral bars, bars more than 1/4 inch in diameter shall be deformed bars.

(b) **Welded wire fabric** shall conform to the requirements of Section 223 of the Specifications.

(c) **Bar mat reinforcement** shall conform to the requirements of Section 223 of the Specifications.

(d) **Corrosion resistant steel used for reinforcement** shall conform to the requirements of Section 223 of the Specifications.

406.03—Procedures

(a) **Order Lists and Bending Diagrams:** Copies of order lists and bending diagrams shall be furnished the Engineer when required.

(b) **Protecting Material:** Reinforcing steel shall be stored on platforms, skids, or other supports that will keep the steel above ground, well drained, and protected against deformation.

When placed in the work, steel reinforcement shall be free from dirt, paint, oil, or other foreign substances. Steel reinforcement with rust or mill scale will be permitted provided samples wire brushed by hand conform to the requirements for weight and height of deformation.

(c) **Fabrication:** Bent bar reinforcement shall be cold bent to the shape shown on the plans. Fabrication shall be in accordance with the requirements of the *Manual of Standard Practice for Detailing Reinforced Concrete Structures* (ACI 315).

Spiral bars shall be fabricated to have the proper diameter when placed in position at the pitch shown on the plans. Each end of a spiral bar shall have 1 1/2 finishing turns at each end in a plane perpendicular to the axis of the spiral.

(d) **Placing and Fastening:** Steel reinforcement shall be firmly held during the placing and setting of concrete. Bars, except those to be placed in vertical mats, shall be tied at every intersection where the spacing is more than 12 inches in any direction. Bars in vertical mats and in other mats where the spacing is 12 inches or less in each direction shall be tied at every intersection or at alternate intersections provided such alternate ties accurately maintain the position of steel reinforcement during the placing and setting of concrete.

Tie wires used with corrosion resistant reinforcing steel shall be solid stainless or plastic coated.

The minimum clear distance from the face of the concrete to any reinforcing bar shall be maintained as specified herein. In superstructures, the cover shall be at least 2 1/2 inches except as follows:

1. **Bottom of slab:** 1 1/4 inches.
2. **Stirrups and ties in T-beams:** 1 1/2 inches.
3. **Rails, rail posts, curbs, and parapets:** 1 inch.

In substructures, the cover shall be at least 3 inches except as follows:

1. **Abutment neat work and pier caps:** 2 1/2 inches.
2. **Spirals and ties:** 2 inches.

In corrosive or marine environments or under other severe exposure conditions, the minimum cover shall be increased 1 inch. Bars that must be positioned by maintaining clearances from more than one face shall be centered so that clearances indicated by the plan dimension of bars are equalized.

Bars shall be placed so that the concrete cover as indicated on the plans will be maintained within a tolerance of 0 to +1/2 inch in the finally cast concrete.

Where anchor bolts interfere with reinforcing steel, the steel position shall be adjusted without cutting to permit placing anchors in their proper locations.

Reinforcement in bridge deck slabs and slab spans shall be supported by standard CRSI metal or precast concrete bar supports. Bar supports shall be spaced as recommended by CRSI but not more than 4 feet apart transversely or longitudinally. Precast concrete supports shall be less than 1 foot in length and staggered so as not to form a continuous line. The lower mat of steel reinforcement shall be supported by a bolster block or individual bar chair supports, and the upper mat shall be supported by high chair supports. Bar supports shall be firmly stabilized so as not to displace under construction activities. Reinforcing bar supports (Standees) may be used for the top mat of steel of simple slab spans provided they hold the reinforcing steel to the requirements specified herein and are firmly tied to the lower mat to prevent slippage. The use of standees will not be permitted for the top mat of steel on any continuous slab spans.

Precast concrete bar supports shall have a 28-day design compressive strength of at least 4,500 pounds per square inch and shall be from the Department's list of approved products for the use specified. Supports shall be furnished with plastic ties or shaped to prevent slippage from beneath the reinforcing bar. Metal bar supports shall be fabricated from one of the following: (1) stainless steel wire conforming to the requirements of ASTM A493, or (2) cold-drawn wire protected by plastic coating conforming to CRSI standards, or other protective coating as approved by the Engineer.

In reinforced concrete sections other than bridge slabs, the specified clear distance from the face of concrete to any reinforcing bar and the specified spacing between bars shall be maintained by means of approved types of stays, ties, hangers, or other supports. The use of pieces of gravel, stone, brick, concrete, metal pipe, or wooden blocks will not be permitted as supports or spacers for reinforcing steel. The use of precast concrete block supports will be permitted provided blocks are furnished in correct thicknesses and are shaped or tied to prevent slippage from beneath reinforcing bars. The clear distance between bars shall be at least 1 1/2 times the specified maximum size of coarse aggregate but not less than 1 1/2 inches. Before concrete is placed,

reinforcing steel will be inspected and approved for proper position and the adequacy of the method for maintaining position.

(e) **Splicing and Lapping:** Reinforcement shall be furnished in full lengths as indicated on the plans. Except where shown on the plans, splicing bars will not be permitted without the written approval of the Engineer. Splices shall be as far apart as possible.

In lapped splices, bars shall be placed in contact and wired together. Lap lengths shall be as indicated on the plans. When reinforcing bars cannot be fabricated with the lengths shown on the plans, the bars may be lapped at no additional cost to the Department. Lap lengths shall be in accordance with the AASHTO *LRFD Bridge Design Specifications.*

Mechanical butt splicing will be permitted at locations shown on the plans. The mechanical connection shall develop in tension or compression, as required, 125 percent of the specified yield strenghth of the bar. The total slip of the bar within the splice sleeve of the connector after loading in tension to 30.0 ksi and relaxing to 3.0 ksi shall not exceed the following measured displacements between the gage points clear of the splice sleeve:

For bar sizes up to No. 14:	0.01 inch
For No. 18 bars:	0.03 inch

For corrosion resistant reinforcing bars, mechanical butt splicers shall be of the same material as the bars being spliced except for stainless clad bars for which the splicers shall be stainless steel.

Reinforcing steel shall be welded only if specified on the plans. Welding shall be in accordance with the requirements of Section 407.04(a) of the Specifications. Reinforcing steel conforming to ASTM A615 Grade 60 shall not be welded. Corrosion resistant reinforcing steels shall not be welded.

Lap lengths for welded wire fabric or bar mat reinforcement shall be in accordance with the current AASHTO *LRFD Bridge Design Specifications.*

406.04—Measurement and Payment

Reinforcing steel will be measured in pounds of steel placed in the structure as shown on the plans. The weight of **welded wire fabric** will be computed from the theoretical weight per square yard placed, including allowance for laps not to exceed 8 percent of the net area. Reinforcing steel or welded wire fabric will be paid for at the contract unit price per pound. These prices shall include furnishing, fabricating, and placing reinforcement in the structure. In structures of reinforced concrete where there are no structural steel contract items, expansion joints, plates, rockers, bolts, and similar minor metal parts will be paid for at the contract unit price for reinforcement.

Corrosion resistant reinforcing steel, when a pay item**,** will be measured in pounds and paid for at the contract unit price per pound of the designated type of steel indicated and placed in the structure in the location(s) shown on the plans. This price shall include fabricating, shipping, furnishing and placement.

No payment will be made for fastening devices that may be used by the Contractor for keeping reinforcing bars in their correct position. When the substitution of larger bars than those specified is allowed, payment will be made for only the amount of metal that would have been required if the specified size of bar had been used. When full-length bars are shown on the plans and the Contractor obtains approval to use short bars for his convenience, the weight paid for will be based on the full-length dimensions with no allowance made for splices.

Payment will be made under:

Pay Item	Pay Unit
Reinforcing steel	Pound
Welded wire fabric	Pound
Corrosion resistant reinforcing steel, Class I	Pound
Corrosion resistant reinforcing steel, Class II	Pound
Corrosion resistant reinforcing steel, Class III	Pound

VIRGINIA DEPARTMENT OF TRANSPORTATION
2007 ROAD AND BRIDGE SUPPLEMENTAL SPECIFICATIONS

SUPPLEMENTAL SECTION 408—BEARING DEVICES AND ANCHORS

SECTION 408—BEARING DEVICES AND ANCHORS of the Specifications is amended as follows:

Section 408.04—Measurement and Payment is amended to replace the first paragraph with the following:

Metal bearing and expansion plates and anchors will be measured by shop scales in pounds of actual material placed in accordance with the plans. When not a separate pay item, the Department will include the weights of plates and anchors in the weight of structural steel or reinforcing steel for payment. When a pay item, bearing plates will be paid for at the contract unit price per pound and shall include elastomeric and other flexible bearing pads. The cost of bedding and preparation for metal bearing plates shall be included in the prices for superstructure items. This price shall include furnishing material, galvanizing, painting, and lubricating.

VIRGINIA DEPARTMENT OF TRANSPORTATION
2007 ROAD AND BRIDGE SUPPLEMENTAL SPECIFICATIONS

SUPPLEMENTAL SECTION 413—DISMANTLING AND REMOVING EXISTING STRUCTURES OR REMOVING PORTIONS OF EXISTING STRUCTURES

SECTION 413—DISMANTLING AND REMOVING EXISTING STRUCTURES OR REMOVING PORTIONS OF EXISTING STRUCTURES of the Specifications is amended as follows:

Section 413.02(b) **Removing Portion of Existing Structure** is replaced with the following:

(b) **Removing Portion of Existing Structure:** The portions to be removed shall be the areas designated on the plans. No portion of the structure shall be removed by blasting or other methods that may damage any portion of the structure that will remain in place. When pneumatic hammers are used to remove concrete, the weight of the hammer alone shall be not more than a nominal 90 pounds for widening work or a nominal 35 pounds for deck repair work. The use of tractor-mounted demolition hammers with a maximum manufacturer's rated striking energy of 1,000 foot-pounds will be permitted for the removal of concrete parapets down to the top of deck and for that portion of the deck where the reinforcing steel will be removed. The use of tractor-mounted demolition hammers or pneumatic hammers weighing more than a nominal 35 pounds shall not be allowed for the removal of that portion of the deck that is within 6 inches of the top flange of the beams/girders to remain in the structure. With the written approval of the Engineer, hydraulically actuated, jaw type, concrete crushers may be used for the removal of concrete parapets down to the top of the deck. The approval of hydraulically actuated, jaw type, concrete crushers shall be contingent upon continuous satisfactory results with no damage to any portion of the structure that is to remain in place. The removal of concrete parapet on prestressed concrete slab spans or prestressed concrete box beam spans shall be limited to nominal 35-pound pneumatic hammers within 2 inches of the deck and not more than nominal 90-pound pneumatic hammers for the remainder of the parapet unless otherwise approved by the Engineer.

Disturbed areas shall be uniformly graded to natural ground contours in a manner that will facilitate drainage and prevent impoundment of water.

Materials or portions of existing structures removed shall be handled in accordance with the requirements of (a)1. herein.

VIRGINIA DEPARTMENT OF TRANSPORTATION
2007 ROAD AND BRIDGE SUPPLEMENTAL SPECIFICATIONS

SUPPLEMENTAL SECTION 414—RIPRAP

SECTION 414—RIPRAP of the Specifications is amended as follows:

Section 414.04—Measurement and Payment is amended to replace the ninth and tenth paragraphs with the following:

Riprap will be paid for at the contract unit price. This price shall include furnishing and placing riprap, including welded wire fabric, mortar, or grout; excavation; and riprap bedding. These prices shall include geotextile bedding material when required. The price bid shall include preparing the surface, furnishing and installing geotextile bedding material, overlaps, repair work, and excavating and backfilling toe-ins.

(**c512l00**-1012) **TYPE III BARRICADE —** Type III barricades specified in this contract shall refer to the Type 3 barricades in the 2011 edition of the *Virginia Work Area Protection Manual*, the 2009 edition of the *MUTCD* and the current *Virginia Supplement to the MUTCD*. Materials, procedures, measurement and payment for the Type 3 barricades specified in these publications shall be in accordance with the Type III barricades specified in this contract.

10-3-12 (SPCN)

VIRGINIA DEPARTMENT OF TRANSPORTATION
SPECIAL PROVISION FOR
CG-12 DETECTABLE WARNING SURFACE

February 12, 2003ccc
Reissued July 2008c

I. DESCRIPTION

This work shall consist of providing all labor, tools, equipment, and materials required to construct sidewalk with detectable warning surfaces in the location(s) specified on the plans or in the proposal. The Contractor shall perform the work according to the details shown on the plans or in this special provision, Section 504 of the Specifications, and as directed by the Engineer.

II. MATERIALS

Materials shall conform to the requirements of Section 504 of the Specifications except as follows:

In lieu of concrete, solid brick pavers, or concrete pavers, other permanent, durable materials suitable for heavy traffic outdoor areas approved by the Department may be used to construct the detectable warning areas where called for in the plans and other contract documents. Solid brick pavers and concrete paver units shall conform to the details and requirements shown in the plans. Other durable materials shall be in accordance with Department approved manufacturer's design and specification requirements.

There shall be a minimum of 70 percent contrast in light reflectance between the detectable warning area and adjoining surfaces. The detectable warning can optionally be "safety yellow". The material used to provide visual contrast shall be an integral part of the detectable warning surface. Both the truncated domes and the underlying surface must meet the contrast requirement. The contrast in percent shall be determined by:

$$\textbf{Contrast} = [\,(B1 - B2)\,/\,B1\,] \times 100$$

where B1=light reflectance value (LRV) of the lighter area and B2=light reflectance value (LRV) of the darker area. Note that in any application both white and black are never absolute; thus, B1 never equals 100 and B2 is always greater than 0.

When visual contrast other than "safety yellow" is used, provide verification of contrast. Verification of visual contrast is required.

III. PROCEDURES

Construct sidewalk ramp according to Section 504 of the Specifications except for detectable warning/truncated domes that shall be furnished or constructed in accordance with the details in this specification, the manufacturer's recommendations, the Special Design Drawing and the Plans.

IV. MEASUREMENT AND PAYMENT

CG-12 Detectable Warning Surface will be measured in square yards and paid for at the contract unit price per square yard, complete-in-place. This price shall be full compensation for furnishing and installing approved truncated dome finished materials including but not limited to concrete, brick or concrete pavers, other Department approved materials, integral visual contrast, dowels and all other labor, tools, equipment, materials and incidentals necessary to fully complete the work.

Payment will be made under:

Pay Item	Pay Unit
CG-12 Detectable Warning Surface	Square yard

S512KG0-0708

VIRGINIA DEPARTMENT OF TRANSPORTATION
SPECIAL PROVISION FOR
WORK ZONE TRAFFIC CONTROL MANAGEMENT

January 14, 2008

I. GENERAL DESCRIPTION

This work shall consist of providing work zone traffic control management in strict compliance with the contract, plans, specifications, the Virginia Work Area Protection Manual and the Manual on Uniform Traffic Control Devices (MUTCD), including supervision of personnel and the installation, inspection, and maintenance of all traffic control devices on the project.

II. REQUIREMENTS

The Contractor shall assign a traffic control supervisor (TCS) to provide work zone traffic control management for the project. If the Contractor assigns more than one TCS to provide work zone traffic control management, a weekly schedule identifying who will be in charge of providing work zone traffic control management on a daily basis shall be submitted to the VDOT Area Construction Engineer by the Contractor.

The TCS shall have a set of traffic control plans and a copy of the edition of the Virginia Work Area Protection Manual specified on the plan sheet or in the contract readily available at all times.

A. Certification

Prior to commencing work requiring work zone traffic control management, the Contractor shall submit to the Area Construction Engineer a valid copy of the Traffic Control Supervisor certificate (wallet size card) issued by the American Traffic Safety Services Association (ATSSA), or another similarly accredited agency or firm approved by the Department.

The Department will accept the certification by ATSSA or any approved agency or firm only if all of the following minimum requirements are met:

1. Successful completion of an Intermediate or Advanced work zone traffic control training course approved by the Department.

2. Passing a written examination given by the agency or firm on the approved work zone traffic control training course.

3. A minimum of two years full-time field experience in work zone traffic control. The experience may be verified by the Department at its discretion.

The TCS certification shall be renewed every four years by the TCS taking and passing a recertification test. The recertification test shall be taken through ATSSA or an agency or firm approved by the Department. Recertification shall be done in the fourth year prior to the expiration date.

B. Duties

The TCS's main responsibility shall be work zone traffic control management. The TCS may have other assigned duties on the project as approved in writing by the Area Construction Engineer. The following is a listing of the TCS's primary duties:

1. The TCS(s) shall personally provide work zone traffic control management and supervision services at the project site.

2. The TCS(s) shall coordinate the training of flagging and signing personnel.

3. The TCS(s) shall supervise the flagging and signing personnel.

4. The TCS(s) shall coordinate all work zone traffic control operations for the duration of the contract, including those of subcontractors, utility companies, and suppliers, to ensure that all work zone traffic control is in place and fully operational prior to the commencement of any work.

   The Department recognizes that the Contractor does not have direct control over the work zone traffic control operations of the utility companies. The coordination provided by the TCS when dealing with utility companies is for the purpose of coordinating concurrent utility work zone traffic control with any other construction/maintenance work zone traffic control to avoid conflicts.

5. The TCS(s) shall perform daily reviews of work zone traffic control when work activities are underway and document in the work zone traffic control daily diary activities taking place and any deviation from the traffic control plan, length and timing and mitigation of excessive traffic queues, and instances or conflicts or problems with the work zone traffic control and corrective actions taken. In addition, the TCS(s) shall perform weekly reviews of the work zone traffic control and document in detail using Forms TE-97001 and 97002. Every other detailed weekly review shall be performed during nighttime hours or as directed by the Area Construction Engineer.

   The TCS shall inspect traffic control devices in use for compliance with the ATSSA Quality Standards for Work Zone Traffic Control Devices, the Road and Bridge Specifications, and the Virginia Work Area Protection Manual. The TCS shall provide for the immediate repair, cleaning, or replacement of traffic control devices not functioning as required to ensure the safety of the motorists and construction personnel.

   The traffic control devices shall be inspected by the TCS during working and nonworking hours on a schedule approved in writing by the Area Construction Engineer, but as a minimum at the beginning and end of each work day or night and once during non-working weekends and holidays, and daily on restricted days due to inclement weather or during any work shutdown.

   Traffic control devices in use longer than fourteen (14) days shall be inspected by the TCS at least once every other week during nighttime periods.

6. The TCS(s) shall prepare and submit statements concerning road closures, delays, and other project activities to the District Public Affairs office as required.

7. The TCS(s) shall be responsible for notifying the VDOT project Maintenance of Traffic (MOT) Coordinator or designee, of all accidents related to the project traffic control. The time and date of notification shall be documented in the daily diary.

8. The TCS(s) assigned to the project shall attend the preconstruction conference and any other meeting which involves traffic control.

9. The TCS(s) shall be responsible for the maintenance, cleanliness, and replacement of traffic control devices of the existing traffic control plan during working and non-working hours.

C. Documentation - Traffic Control Diary

The TCS shall maintain a project work zone traffic control diary in a bound book. The Contractor shall provide a sufficient number of diaries for his or her use.

The TCS shall keep the work zone traffic control diary current on a daily basis, and shall sign each daily entry. Entries shall be made in ink in a format approved by the Area Construction Engineer, and there shall be no erasures or white-outs. Incorrect entries shall be struck out and then replaced with the correct entry. Photographs may be used to supplement the written text.

The work zone traffic control diary shall, at all times, be available for inspection by the VDOT Maintenance of Traffic Coordinator and a copy of the diary shall be submitted to the MOT Coordinator on a weekly basis.

The work zone traffic control diary(s) shall become the property of the Department at the completion of the project. Failure to submit the diary shall result in the withholding of final payment until the diary(s) is submitted.

D. Availability of TCS

Traffic control management shall be provided under the supervision and direction of the TCS on a 24-hour-per-day basis throughout the duration of the project.

The TCS shall be available on every working day—on call at all times—and available upon the Area Construction Engineer's request during normal working hours and during other than normal working hours in the case of emergency. The provisions for availability of the TCS shall also be met during times of partial or full project suspension. Contact telephone numbers for the TCS(s) shall be provided to Department project personnel, the Area Construction Engineer, the Residency Administrator, and the region Smart Traffic Center prior to the Contractor commencing work requiring work zone traffic control management.

E. Failure to Comply

The Area Construction Engineer may suspend all or part of the Contractor's operation(s) for failure to comply with the approved "Traffic Control Plan" or failure to correct unsafe traffic conditions within 24 hours for critical items and 72 hours for non-critical items after such notification is given to the Contractor in writing.

In the event that the Contractor does not take appropriate action to bring the deficient work zone traffic control into compliance with the approved traffic control plan or fails to correct the unsafe traffic conditions, the Department may proceed with the corrective action using its own forces, equipment, and material to maintain the project and such costs, plus 25 percent for supervisory and administrative personnel, will be deducted from the money owed to the Contractor for the project.

The Contractor shall not be relieved of the responsibility to provide work zone traffic control safety to the traveling public when a project is under full or partial suspension. When a project is under suspension due to the Contractor's failure to comply with this section, or when the contract is under liquidated damages, the Contractor shall continue to provide work zone traffic control management and no additional measurement or payment will be made.

If suspensions or partial suspensions are requested by the Contractor, the additional work zone traffic control management costs will be at the Contractor's expense.

III. MEASUREMENT AND PAYMENT

Work Zone Traffic Control Management will be paid for at the contract lump sum price. This price shall be full compensation for furnishing 24 hour services as specified, including preparing and furnishing Work Zone Traffic Control diaries.

When work zone traffic control management is paid for by the lump sum, monthly partial payments for work zone traffic control management will be made on a pro rata basis for the estimate period being vouchered for payment.

In the event the contract time is authorized to be extended in accordance with the provisions of Section 108.04 of the Specifications, the provisions of Section 104.02 of the Specifications will not apply. The payment for this item will be compensated on a daily basis by dividing the original lump sum bid amount by the number of calendar days in the original contract time and the resultant daily dollar value assigned to this item.

Payment will be made under:

Pay Item	Pay Unit
Work Zone Traffic Control Management	Lump Sum

VIRGINIA DEPARTMENT OF TRANSPORTATION
SPECIAL PROVISION FOR
COLD PLANING (MILLING) ASPHALT CONCRETE OPERATIONS

October 1, 2012

I. DESCRIPTION

This provision shall govern cold planing (milling) asphalt concrete operations in preparation for pavement repair and/or pavement overlay. Cold planing or milling of asphalt concrete pavement shall be performed according to Section 515 of the Specifications and the requirements herein.

II. GENERAL PROCEDURES

The Contractor is permitted to perform either regular pavement planing or performance pavement planing to the contract specified depth or as directed by the Engineer in order to provide a uniform sound substrate prior to paving roadways designated in the schedules according to Section 315, the requirements herein or elsewhere in the Contract documents.

When the Contractor elects to performance plane on roadways specified to be planed to a depth of 2 inches or less, the Contractor shall performance plane only that amount of pavement which can be paved back within 14 calendar days of completion of planing the roadway or portion of roadway. The Contractor is required to perform pavement surface testing as specified in Section 515.04 of the Specifications to verify he has achieved the acceptable surface texture specified in that Section prior to opening the performance planed surface to traffic. The additional traffic control devices and signage required for the 14 calendar day pave back operation allowance for performance planing operations versus the traffic control devices required for 96 hour pave back operations for regular pavement planing operations shall be at the Contractor's expense.

Limitations of operations for planing shall be performed according to the requirements of Section 108.02 of the Specifications, other Contract specific requirements and as specified herein.

Where appropriate according to contract requirements and site specific conditions, the existing asphalt concrete layers shall be planed to permit the transition of the top course of the asphalt concrete overlay according to the details of the ACOT-1 Standard. Any sub-courses termination may be notched into the existing pavement or blended with the next course of pavement.

The Contractor will not be permitted to plane a portion of the width of a travel lane, ramp, loop or shoulder and leave it unpaved and open to traffic. Abutting shoulders may also be planed during single and multiple lane planing operations. Planing operations shall be planned and performed to maintain positive drainage according to the requirements of Section 315.05(c) of the Specifications.

Where the depth of planing designated in the Contract or directed by the Engineer is 2 inches or less, the Contractor shall have the option of planing the abutting lane or shoulder on alternate days or squaring up the planing operation at the end of each work shift. However, abutting lanes or shoulders shall be planed and squared up regardless of planing depth prior to holidays or any temporary shutdowns.

In the event an emergency or an unforeseen circumstance such as equipment failure or breakdown occurs during the Contractor's operations and such emergency or unforeseen circumstance within his control prevents the Contractor from squaring up the planed surface on adjacent lanes prior to

a holiday or temporary shutdown, any additional signage, traffic control devices or temporary markings or markers required to protect the traveling public shall be the Contractor's responsibility and at his expense.

Where the depth of planing designated in the Contract or directed by the Engineer is greater than 2 inches in the Contract documents, the Contractor shall square up the planing operation at the end of each workday or plane adjacent lanes including abutting shoulders within the same day for the length of that day's planing operation.

Where uneven pavement joints exist either transversely or longitudinally at the edges of travel lanes, the Contractor shall provide advance warning signage and traffic control devices to inform the traveling public according to the details provided in the Contract for the scope of operation he is performing. The cost for such advance warning signage and traffic control devices shall be included in the cost of other appropriate items.

III. ROADWAY CLASSIFICATION LIMITATIONS

The following restrictions, based on the type of roadway, shall apply:

A. Roadways with Posted Speed Limit of 55 Mph or Greater

Performance planing may be performed in multiple lanes across the entire widths of the lanes up 4 miles of travel lane unless otherwise stated in the Contract. Performance planed surfaces must be paved back within 14 calendar days from the start of the performance planing operation.

Where the Contractor decides to performance plane multiple lanes, the Contractor shall be responsible for furnishing and installing advance warning signage and traffic control devices to inform the traveling public according to the details provided in the Contract. Temporary pavement markings required by such operations will be handled according to the requirements of Section 704.03 and the *Special Provision for* ***TEMPORARY CONSTRUCTION AND PERMANENT PAVEMENT MARKINGS*** included in the Contract. The cost for such warning devices and advance signage required by multiple lane planing operations shall be included in the cost of other appropriate items unless otherwise specified in the contract by a specific pay item(s) for separate payment.

Ramps and exits shall be planed in such a manner that a longitudinal joint is not left for vehicles to cross within the posted speed limits in a "run on" situation (approaching a higher elevation surface difference of greater than 1 inch). To prevent this, the Contractor can 1.) plane ramps and exits to the extent that the joint line between new and existing pavement crossed by traffic is traversed at an angle close to ninety degrees per the ACOT-1 Standard for temporary transverse joints or 2.) perform tapered planing along the ramp/exit longitudinal joint to provide a smooth transition for vehicles to cross or 3.) square up ramp or exit pavement with the adjacent mainline lane at the time of installation.

The following additional restrictions will also apply to roadways where regular pavement planing is applicable:

- On roadways with a combination of 4 or more lanes and shoulders (i.e. 2 or more travel lanes and 2 shoulders [each shoulder a minimum 6 feet wide]) in one direction, all travel lanes must be paved back before the weekend. Up to two thousand five hundred (2,500) feet of shoulder may be planed and left over the weekend provided the portion of planed shoulder left unpaved over the weekend is paved within 48 hours after the end of the weekend period.

- The Contractor shall pave all ramps and loops that have been regular planed during the week before the weekend.

B. All Other Roadways

If the Contractor elects to perform regular pavement planing he will be permitted to leave up to two miles of travel lane open to the traveling public provided such planing (milling) is performed across the entire lane width. These same length restrictions will apply in cases where multiple-lane regular pavement planing is permitted in the Contract or allowed by the Engineer. The Contractor will be limited in the case of regular pavement planing, whether in a single lane or multiple lane operation, to only that amount of pavement that can be paved back within 96 hours of completion of planing that roadway or portion of roadway.

When the Contractor elects to performance plane on roadways specified to be planed to a depth of 2 inches or less, the Contractor shall plane only the amount of pavement that can be paved back within 14 calendar days of completion of planing that roadway or portion of roadway. The Contractor is required to perform pavement surface testing as specified in Section 515.04 of the Specifications to verify he has achieved the acceptable surface texture prior to opening the performance planed surface to traffic. The additional traffic control devices and signage required for the 14 calendar day pave back operation allowance for performance planing operations versus the traffic control devices required for 96 hour pave back operations for regular pavement planing operations shall be at the Contractor's expense.

Roadways on which the roadway edges (i.e. edge milling) are to be planed shall be paved back within 10 days from the completion of the planing operation.

VIRGINIA DEPARTMENT OF TRANSPORTATION
2007 ROAD AND BRIDGE SUPPLEMENTAL SPECIFICATIONS

SUPPLEMENTAL SECTION 501—UNDERDRAINS

SECTION 501—UNDERDRAINS of the Specifications is amended as follows:

Section 501.04—Measurement and Payment is amended to replace the first through fourth paragraphs with the following:

Underdrains and combination underdrains will be measured in linear feet, complete-in-place, and will be paid for at the contract unit price per linear foot. The contract unit price for underdrains installed at depths greater than those shown in the standard drawings will be increased 20 percent for each 1-foot increment of increased depth. No adjustment in the contract unit price will be made for an increment of depth of less than 6 inches. When drains are to be placed under pavement that is not constructed under the Contract, the contract unit price shall include removing and replacing pavement.

Outlet pipe for underdrains will be measured in linear feet, complete-in-place, and will be paid for at the contract unit price per linear foot.

These prices shall include furnishing and installing geotextile drainage fabric, excavating, furnishing and installing aggregate, backfilling, compaction, splicing, inspection ports, if any, disposing of surplus and unsuitable materials, and installing outlet markers.

VIRGINIA DEPARTMENT OF TRANSPORTATION
2007 ROAD AND BRIDGE SUPPLEMENTAL SPECIFICATIONS

SUPPLEMENTAL SECTION 512—MAINTAINING TRAFFIC

SECTION 512—MAINTAINING TRAFFIC of the Specifications is amended as follows:

Section 512.03(a) **Signs** is amended to replace the last paragraph with the following:

When construction signs are covered to prevent the display of the message, the entire sign shall be covered with silt fence or other materials approved by the Engineer such that no portion of the message side of the sign shall be visible. Plywood shall be used on ground-mounted construction signs only. Attachment methods used to attach the covering material to the signs shall be of a durable construction that will prevent the unintentional detachment of the material from the sign. At no times shall a construction sign and/or post be rotated to prevent the display of the message. In addition, the posts where the signs are being covered shall have two ED-3 Type II delineators mounting vertically on the post below the signs at a height of 4 feet to the top of the topmost delineator. The bottom delineator shall be mounted 6 inches below the top delineator.

Section 512.03(b) **Flagger Service and Pilot Vehicles** is amended to replace the last paragraph with the following:

Portable traffic control signals conforming to the requirements of Section 512.03(h)2 of the Specifications may be used in lieu of flagger service when specified or approved by the Regional Traffic Engineer. When portable traffic control signals are used in lieu of flagger service, the portable traffic control signals will be measured and paid for separately.

Section 512.03(e)b. **Group 2 devices** is amended to replace the first paragraph with the following:

b. **Group 2 devices** shall be drums or vertical panels. Drums shall be round, or partially round with no more than one flat side; made from plastic; have a minimum height of 36 inches, have a cross-sectional width no less than 18 inches in any direction; and conform to the requirements of the *Virginia Work Area Protection Manual*. Drums shall be designed to allow for separation of ballast and drum upon vehicular impact but not from wind and vacuum created by passing vehicles. Drums of two-piece design, i.e., drum and associated base, shall utilize sufficient amounts of enclosed sand at the base in accordance with the manufacturer's recommendations to provide stable drum support. The base shall be not greater than 5 inches in height. Two-piece drums may also utilize a flared drum foundation and collar of not more than 5 inches in height and of suitable shape and weight to provide stable support. One-piece drums may be used provided they comply with these above requirements.

Section 512.03 Procedures is amended to add (r) **Work Zone Traffic Control** as the following:

(r) **Work Zone Traffic Control**: The Contractor shall provide individuals trained in Work Zone Traffic Control in accordance with the requirements of Section 105.14 of the Specifications.

Section 512.04 Measurement and Payment is amended to add the following:

Basic Work Zone Traffic Control – Separate payment will not be made for providing a person to meet the requirements of Section 105.14 of the Specifications. The cost thereof shall be included in the price of other appropriate pay items.

Intermediate Work Zone Traffic Control - Separate payment will not be made for providing a person to meet the requirements of Section 105.14 of the Specifications. The cost thereof shall be included in the price of other appropriate pay items.

Section 512.04 Measurement and Payment is amended to replace the pay item and corresponding pay unit for "**Eradication of existing pavement markings**" with the following:

Eradication of existing pavement markings will be measured in linear feet of a 6-inch width or portion thereof as specified herein. Widths that exceed a 6-inch increment by more than 1/2 inch will be measured as the next 6-inch increment. Measurement and payment for eradication of existing pavement markings specified herein shall be limited to linear pavement line markings. Eradication of existing pavement markings will be paid for at the contract unit price per linear foot. This price shall include removing linear pavement line markings and disposing of residue.

Eradication of existing nonlinear pavement markings will be measured in square feet based on a theoretical box defined by the outermost limits of the nonlinear pavement marking. Nonlinear pavement markings shall include but not be limited to stop bars, arrows, images and messages. Eradication of existing nonlinear pavement markings will be paid for at the contract unit price per square foot. This price shall include removing nonlinear pavement markings and disposing of residue.

Payment will be made under:

Pay Item	**Pay Unit**
Eradication of existing pavement marking	Linear foot
Eradication of existing nonlinear pavement marking	Square foot

VIRGINIA DEPARTMENT OF TRANSPORTATION
2007 ROAD AND BRIDGE SUPPLEMENTAL SPECIFICATIONS

SUPPLEMENTAL SECTION 514—FIELD OFFICE

SECTION 514—FIELD OFFICE of the Specifications is amended as follows:

Section 514.02—Procedures of the Specifications is amended to replace (j) with the following:

(j) **Miscellaneous Items:** The field office shall also include the following:

1. A certification that the office is free of asbestos and other hazardous material.

2. A broom, dust pan, mop, mop bucket, general cleaning supplies, and trash bags.

3. An all weather parking area for either twelve vehicles (for a Type I office) or six vehicles (for either a Type II or a Type III office), and all weather graveled access to the public roadway. The Contractor shall maintain the parking area and graveled access such that it is passable with a compact sedan without causing vehicular damage. The parking lot shall be sufficiently lighted to illuminate all areas of the lot.

4. Security measures for the Field Office during other than normal working hours shall be equivalent to that used by the Contractor for his job site and office facilities.

VIRGINIA DEPARTMENT OF TRANSPORTATION
2007 ROAD AND BRIDGE SUPPLEMENTAL SPECIFICATIONS

SUPPLEMENTAL SECTION 515—PLANING OR MILLING PAVEMENT

SECTION 515—PLANING PAVEMENT of the Specifications is completely replaced with the following:

SECTION 515—PLANING OR MILLING PAVEMENT

515.01—Description

This work shall consist of planing (milling) of rigid or flexible pavement to the designated depth specified in the plans or other Contract documents in preparation for pavement repair or pavement overlay. For the purposes of this section, rigid pavement shall mean hydraulic cement concrete pavement or hydraulic cement concrete surfaced pavements. Flexible pavement shall mean asphalt concrete or asphalt concrete surface pavements. Planing as used herein is also referred to as milling or grinding. Milled cuttings shall be removed and disposed of by the Contractor in accordance with the requirements of Section 106.04 of the Specifications or used in the work if permitted in the Contract or directed by the Engineer.

515.02—Equipment

Planing shall be performed with a pavement planing or pavement grinding machine of a type that has operated successfully on work comparable to that specified in the Contract. Milling and cold planing equipment shall be capable of accurately cutting to the length, width, depth and typical section specified in the Contract in flexible pavement or rigid pavement while leaving a uniformly cut or ground roadway surface capable of handling traffic prior to overlay placement. The milling equipment shall not damage the underlying pavement surface. The milling machine shall be equipped with an automatic grade control system that will control the longitudinal profile and cross slope of the existing pavement milled surface as the milling operations proceed. The ground speeds of the machine and the cutting equipment shall be independent. The machine shall have a self-contained water system for the control of dust and fine particles. The width of the machine shall allow for the passage of controlled public traffic while in use. The machine shall have a dust collection system or have a system to minimize dust created by the planing (milling) operation from escaping into the atmosphere.

The Contractor shall continuously monitor the cutting or grinding head of the machine so as to ensure and maintain the creation of a uniformly textured milled surface. Equipment and vehicles in use under traffic shall be equipped according to the requirements of the Work Area Protection Manual.

515.03—Procedures

Limitations of operations for planing operations shall be in accordance with the requirements of Section 108.02 of the Specifications and as specified in the Contract.

The Contractor may perform either regular planing or performance based planing at his option unless otherwise specified in the Contract. Unless otherwise directed by the Engineer, the finished surface for regular pavement planing and performance planing shall have a tolerance of plus or minus 1/4 inch per foot between any two contacts of the resultant surface and the testing edge of a 10-foot straightedge.

No application of pavement overlay shall decrease the vertical clearance under a bridge. In situations where the existing pavement under the overpass cannot be planed in direct proportion to the proposed overlay, the new pavement is to be tied down to the existing pavement under the overpass no less than 75 feet from the outer edges of the overpass in accordance with Standards.

The finished surface macrotexture for performance planing shall have a pavement macrotexture MTD (mean texture depth) of less than 2.0 millimeters. Testing for performance pavement planing shall be as described hereinafter.

Irregularities and high spots of existing pavement shall be eliminated. The pavement surface shall be milled, ground or planed to the designated grade or gradient as specified on the plans, or where not specified as a grade, shall parallel that of the existing roadway. Transversely, the cross slopes of tangent sections shall be planed to approximately 1/4 inch per foot or as directed by the Engineer. Superelevated curves shall be planed as directed by the Engineer. Where the pavement is to be resurfaced by means of the application of an overlay on curb and gutter roadways, a 1-inch shoulder shall be cut along the gutter line to eliminate the necessity of feathering the edge of the new surface. Payment for providing the 1-inch shoulder shall be based on the total square yards of removed material regardless of the variable depth of the pass.

The finished planed surface shall be true to grade, free from gouges, grooves, ridges, soot, oil film, and other imperfections and shall have a uniformly textured appearance suitable as a temporary riding surface.

Humps and depressions that exceed the specified tolerances and require additional grinding or planing will be subject to correction or replacement as directed by the Engineer at no additional cost to the Department.

The Contractor shall ensure positive drainage is provided for all planed surfaces in accordance with the requirements of Section 315.05(c) of the Specifications. When planing curb and gutter sections the Contractor shall endeavor to work with existing drainage and grades to maintain positive flow. In the event of significant buildup of standing water, the Contractor may be required to erect signage to warn motorists, sweep the roadway to vacate the water, or in extreme cases, close the lane to traffic until proper drainage of the planed surface can be restored.

Temporary transverse pavement-wedge tie-ins shall be constructed where planed existing pavement is to remain temporarily without overlay to the extent allowed or required herein, in Section 315 of the Specifications, elsewhere in the Contract documents, or by the Engineer. Each tie-in shall be constructed no less than 3 feet in length for every inch of depth of pavement planing performed and shall consist of a mix that is suitable for a riding surface that provides a smooth transition between planed existing pavement and existing pavement or bridge decks. Such tie-ins shall be constructed prior to the planed surface being opened to traffic.

When planing to a depth of 2 inches or less at a bridge, the planed (milled) surface at the bridge may be left unpaved for up to 10 days.

Additional or other limitations and conditions to planing operations will be as specified and applicable to the Contract.

515.04—Performance Pavement Planing Testing

This section gives testing procedures and criteria for opening a section of performance planed pavement to public traffic on roadways with posted speed limits of 55 mph or greater as specified herein. The test procedure performed by the Contractor shall measure the mean texture depth (MTD) of the resultant macrotexture surface after performance planing operations have been

completed. The measurement for performance planed surface texture shall be conducted in accordance with the requirements of ASTM E965 using a volumetric technique. The Contractor shall randomly select 10 locations at each site. Each individual location shall be tested and the average MTD of the entire 10 locations per site determined. Prior to opening a lane or roadway to traffic the average MTD of the performance planed site shall be less than 2.0 millimeters and the upper limit for any one MTD measurement shall not exceed 3.10 millimeters in order for that site to be exposed to traffic.

515.05—Measurement and Payment

Where pavement is to be planed to a uniform depth, planing will be measured in square yards of removed pavement of the surface area to the depth(s) specified in the contract documents. The Engineer may direct the depth to be adjusted during the initial pass ± ½ inch due to field conditions at no additional cost, except where such adjustment constitutes a changed condition as explained herein. The planed area is defined as the actual length and width of the planed pavement surface visually verified and accepted by the Engineer for payment. If scabbing or laminations still exist after planing to the maximum potential depth of the initial pass, the Engineer may direct the Contractor to perform additional passes or to increase the depth beyond the maximum potential depth of the initial pass. Such additional passes or increased depth beyond the maximum potential depth of the initial pass will also be measured and paid for in square yards for the depth authorized by the Engineer. Such additional depth passes (beyond the maximum potential depth of the original pass) will not be adjusted, as in averaging or as a percentage of original depth or maximum potential depth of the initial pass, to achieve final measurement or payment. In the event the authorized adjustment of the ½ inch for field conditions by the Engineer changes the requirements of the "square up" provisions (in excess of 2 inches), this will be considered a changed condition in accordance with the provisions of Section 104.02 of the Specifications.

Where planing is variable depth and used to tie into existing structures such as curbs and combination curb and gutters and at bridges, except in cases as mentioned below, such tie-in planing will be measured in square yards of removed pavement for the full surface area (the actual length and width of the planed pavement surface visually verified and accepted by the Engineer for payment) within the range of depth specified in the contract documents. **Note:** The Engineer may direct the depth to be adjusted during the initial pass ± ½ inch of the specified depth due to field conditions such as scabbing or delamination at no additional cost, except where such adjustment constitutes a changed condition as explained herein.

If scabbing or laminations still exist after planing to the maximum potential depth of the initial tie-in planing pass, the Engineer may direct the Contractor to perform additional passes or to increase the depth beyond the maximum potential depth of the initial ***pass.*** Additional passes or depths beyond the maximum potential depth of the initial ***pass***, authorized by the Engineer, will also be measured and paid for in square yards of removed pavement of the additional surface area for the depth authorized by the Engineer. Areas of variable depth tie-in planing will not be adjusted, as in averaging or as a percentage of original depth, to achieve final measurement or payment. In the event the authorized adjustment of the ½ inch for field conditions by the Engineer changes the requirements of the "square up" provisions, this will be considered a changed condition in accordance with Section 104.02 of the Specifications.

Planing performed to tie-in overlaid pavement to existing pavement or bridge decks that is determined by the Engineer to be a part of the mainline planing operations will not be measured for separate payment, the cost of which, shall be included in the price bid for the appropriate depth range of flexible or rigid pavement planing.

This price shall include furnishing vehicles, labor, tools, materials, incidentals, safety equipment, warning devices, and removing and disposing of existing pavement.

Payment will be made under:

Pay Item	**Pay Unit**
Flexible pavement planing **(0-2" depth**)	Square yard
Flexible pavement planing (**Above 2"-4" depth**)	Square yard
Flexible pavement tie-in planing **(0-2" depth**)	Square yard
Flexible pavement tie-in planing (**Above 2"-4" depth**)	Square yard
Flexible pavement planing **(over 4" depth)**	Square yard
Rigid pavement planing **(0-2" depth)**	Square yard
Rigid pavement tie-in planing **(0-2" depth)**)	Square yard

(**c700i00**-0313) **SECTION 700—GENERAL** of the Specifications is amended as follows:

Section 700.04—Procedures is amended to include the following:

(k) **Anchor Bolts**

Traffic control device foundations shall have a bolt template positioned for correct orientation of the structure with respect to the structure location and roadway alignment and to maintain the anchor bolts vertical (plumb) and level during construction.

Bolt and/or anchor nut covers shall not be installed on any traffic control device structures, unless otherwise specified on the plans.

Anchor bolts in double-nut connections shall extend a minimum of ¼" past the second top nut.

The threaded portion of the anchor bolts shall be lubricated with beeswax, the bolt manufacturer's recommended lubricant, or other lubricant as approved by the Engineer for proper tensioning before the structure is installed.

Double-nut connections installation procedure: (A minimum of three nuts and two hardened washers shall be provided for each anchor bolt.)

1. If bolt(s) are not plumb (vertical), determine if beveled washer(s) may be required prior to erection of the structure. Beveled washers shall be used on top of the leveling nut and/or under the first top nut if any face of the base plate has a slope greater than 1:20 and/or any nut could not be brought into firm contact with the base plate.

2. Clean and lubricate the exposed thread of all anchor bolts, nuts and all bearing surfaces of all leveling nuts. Re-lubricate the exposed threads of the anchor bolts and the threads of the nuts if more than 24 hours has elapsed since earlier lubrication, or if the anchor bolts and nuts have become wet since they were first lubricated.

3. Verify that the nuts can be turned onto the bolts the full length of the threads by hand.

4. Turn the leveling nuts onto the anchor bolts and align the nuts to the required elevation shown on the shop drawings. The maximum distance between the bottom of the leveling nut and the top of the foundation shall be one inch.

5. Place structural hardened washers on top of the leveling nuts (one washer corresponding to each anchor bolt).

6. The post or end frame shall be plumbed or aligned as shown on the shop drawings. The maximum space between the bottom of the base plate and the top of the foundation shall be the diameter of the anchor bolt plus one inch. Place structural hardened washers on top of the base plate (one washer corresponding to each anchor bolt), and turn the first top nuts onto the anchor bolts.

7. Tighten first top nuts to a snug-tight condition in a star pattern. Snug-tight is defined as the maximum nut rotation resulting from the full effort of one person using a 12-inch long wrench or equivalent. A star tightening pattern is one in which the nuts on opposite or near-opposite sides of the bolt circle are successively tightened in a pattern resembling a star.

8. Tighten bottom leveling nuts to a snug-tight condition in a star pattern.

9. At this point, verify again if beveled washers are necessary using the criteria from step 1. If a beveled washer is required, remove the structure if necessary, add the beveled washer(s) and retighten first top nuts and bottom leveling nuts (in a star pattern) to a snug-tight condition.

10. Mark the reference position of each first top nut in a snug-tight condition with a suitable method on one flat surface of the nut with a corresponding reference mark on the base plate at each bolt before final tightening of the first top nuts. Then rotate the first top nuts incrementally to one half the required nut rotation specified in Table 1 using a star pattern until achieving. Rotate the first top nuts again, using a star pattern, to the full required nut rotation specified in Table 1. For example, if total rotation from snug tight is 1/6 turn (60°), rotate 30° in each cycle.

Table 1

Anchor Bolt Diameter, (in.)	Nut Rotation beyond Snug - Tight	
	ASTM F 1554 Grade 36 (M314)	ASTM F 1554 Grade 55 (M 314)
≤1½	1/6 turn (60°)	1/3 turn (120°)
>1½	1/12 turn (30°)	1/6 turn (60°)

Nut rotation is relative to anchor bolt. Anchor bolt nut tensioning shall not exceed plus 20°.

Unified Thread Standard (UNC) tensioning is applicable.

Lock nuts and/or split washers shall not be allowed with anchor bolts.

11. Anchor bolt connections that have been tightened shall be inspected in the presence of the Engineer by a calibrated torque wrench. The torque wrench shall be used to verify that a torque at least equal to the verification torque as provided in Table 2 is achieved. A minimum of every other bolt shall be inspected.

Table 2

Anchor Bolt Diameter, (in.)	Verification Torque	
	ASTM F 1554 Grade 36 (M314) Tension/Torque	ASTM F 1554 Grade 55 (M 314) Tension/Torque

	kips/ft-lbs.	kips/ft-lbs.
1	18 / 180	27 / 270
1 1/4	28 / 350	44 / 550
1 1/2	41 / 615	63 / 945
1 3/4	55 / 962	86 / 1,505
2	73 / 1,460	113 / 2,260
2 1/4	94 / 2,115	146 / 3,285
2 1/2	116 / 2,900	180 / 4,500
2 3/4	143 / 3,932	222 / 6,105
3	173 / 5,190	269 / 8,070
3 1/4	206 / 6,695	320 / 10,400
3 1/2	242 / 8,470	375 / 13,125
3 3/4	280 / 10,500	435 / 16,312
4	321 / 12,840	499 / 19,960

12. Install second top nut on each bolt to snug tight.

13. Contractor shall perform an Ultrasonic test on all anchor bolts in accordance with ASTM E114- Ultrasonic Pulse Echo Straight Beam Testing by the Contact Method. Ultrasonic testing personnel shall be qualified in accordance with ASNT SNT-TC-1A Level II and certified by VDOT Materials Division. Equipment shall be qualified in accordance with AWS D1.5 Section 6, Part C Anchor bolts shall have no indications that are above 10% Full Screen Height at the prescribed scanning level. All indications shall be noted on the report and reported to the Project Engineer and VDOT Materials Division.

Section 700.05—Measurement and Payment for Concrete foundations is replaced with the following:

Concrete foundations will be measured and paid for in units of each or cubic yards of concrete as applicable. When paid for in cubic yards of concrete, no payment will be made for concrete in excess of the cubic yards of concrete required by the foundation design unless otherwise approved by the Engineer. This price shall include foundation design, concrete, reinforcing steel, stub poles, anchor bolts, bolt circle templates, lubricant, torque, UT testing, grounding equipment, conduits, excavating, backfilling, compacting, disposing of surplus and unsuitable material, and restoring existing areas.

2-21-13 (SPCN)

(**c704bm0**-1109) **COVERING CLEANING AND INSPECTING EXISTING RAISED PAVEMENT MARKERS** - The Contractor shall cover all existing raised pavement markers by an approved method and material to protect and ensure the integrity of the markers prior to resurfacing. After completion of the resurfacing operation the covering shall be removed, the raised markers cleaned and inspected to insure they are fully operational. Any raised markers damaged by the Contractor's operations shall be replaced by the Contractor at no expense to the Department. The covering, cleaning, and inspection of the raised markers will not be measured for payment and all cost for performing this work shall be included in the price bid for other items of work.

8-29-08 (SPCN)

(**c704cm0**-1109) **SWEEPING PRIOR TO PAVEMENT MARKING** - No earlier than 7 days after completion of surface treatment the Contractor shall sweep the roadway surface prior to installation of pavement markings. Pavement markings shall be installed within 14 days after completion of surface treatment. The cost of sweeping the roadway prior to installing pavement marking shall be included in the price bid for pavement marking.

9-18-01a (SPCN)

VIRGINIA DEPARTMENT OF TRANSPORTATION
SPECIAL PROVISION FOR
TYPE B, CLASS VI PAVEMENT LINE MARKING TAPE

October 21, 2011

I. DESCRIPTION

This work shall consist of furnishing and installing a profiled (non-flat), permanent, white or yellow preformed pavement line marking tape at locations shown on the plans and as directed by the Engineer.

II. MATERIALS

Marking tape shall be a retro-reflective pliant polymer material consisting of a mixture of polymeric materials, pigments and glass beads (reflective optics) distributed throughout its cross-sectional area with a reflective layer of beads (reflective optics) embedded into the surface. The surface of the tape shall exhibit raised areas resulting in a profiled (non-flat) surface.

The shelf life of the tape for use on facilities constructed or maintained by the Department shall be one year from the date of manufacture when stored in accordance with the manufacturer's requirements.

The marking tape shall not be formulated with any compounds of the heavy metals listed in 40 CFR 261.24 Table 1, except that barium sulfate is allowed. Total heavy metals, with the exception of barium sulfate, shall not exceed 20 times the specified regulatory limits. Materials that must be heated for application shall not exude fumes that are toxic or injurious to persons or property when heated to the application temperature.

The marking tape shall be capable of conforming to pavement contours, breaks and faults through the action of traffic at normal range of pavement temperatures. The marking tape shall be capable of application to new and existing asphalt or hydraulic cement concrete at pavement surface temperatures of 45 to 180 degrees Fahrenheit. Where installed with adhesive, the adhesive shall be per the manufacturer's instructions. The marking tape shall also be capable of being inlaid during installation of the final riding surface during paving operation on new, dense, or open-graded asphalt concrete and shall be ready for traffic immediately after application.

Marking tape shall be weather resistant and after installation shall show no significant tearing, roll back, lifting, shrinkage, or other signs of poor adhesion, nor appreciable bleeding or discoloring (fading), which will impair the intended use of the marking tape throughout its intended service life.

The marking tape shall not deteriorate because of contact with sodium chloride, magnesium chloride, calcium chloride, mild alkalies and acids, or other ice control materials, oils in the pavement material, or oil and gasoline drippings from vehicles.

When the pay item specifies Type B, Class VI <u>Contrast</u> pavement marking tape, the tape shall be an additional 3 inches minimum wider than the width specified in the pay item. This additional tape width shall be black non-reflective with 1 ½ inches minimum on both sides of the white.

A. Initial Approval Requirements:

Marking tape products will be included on the Department's Materials Division Approved Products List after the Department determines conformance to these specifications.

Determination of conformance will include, but will not be limited to, the evaluation of initial and one year test data from AASHTO's National Transportation Product Evaluation Program (NTPEP) on a northern deck or other VDOT approved facilities.

If tested through AASHTO/NTPEP, the marking tape shall have been installed, tested, and met the following requirements on asphalt and concrete surfaces. If tested on another VDOT approved facility, VDOT reserves the right to test and approve tapes based upon in-service performance data on either asphalt or hydraulic cement concrete or both types of concrete surfaces.

AASHTO/NTPEP Testing – Test data values used for approval shall be based upon the data generated per the NTPEP, Pavement Marking Material (PMM) Work Plan.

VDOT Test Facility – Test data values used for approval shall be based upon the data generated by following the testing requirements in Virginia Test Method (VTM)-125 to define the evaluation sections and number of measurements needed. VDOT reserves the right to evaluate durability, skid resistance, and no Track Time based upon field (in-service) performance, VDOT lab testing, or third party testing.

The manufacturer shall certify each batch or lot of material supplied is the same product (binder and reflective optics) that was tested and approved on the NTPEP or VDOT test facility in accordance with the Materials Division, Manual of Instructions for Certification II materials.

1. Retroreflectivity

Tapes shall have the following retroreflectance values after installation when measured in accordance with the requirements of ASTM E 1710. The reflectance values for NTPEP acceptance will be determined from outside of the wheel path. The photometric quantity to be measured shall be Coefficient of Retroreflected Luminance (R_L) and shall be expressed as Millicandelas per square foot per footcandle [$(mcd \cdot ft^{-2}) \cdot fc^{-1}$].

Coefficient of Retroreflected Luminance(R_L) ($mcd \bullet ft^{-2} \bullet fc^{-1}$)		
Color	**New**	**1 Year**
White	500	300
Yellow	300	200

2. Day and Nighttime Color:

Daytime and Nighttime Color including Luminance Factor (Cap Y) shall conform to the requirements of ASTM D 6628 when initially installed and then after 1 year. Color and Luminance Factor values for NTPEP acceptance will be determined from outside of the wheel path. Night color may be measured in accordance with VTM-111 or with portable night color instrumentation per ASTM D 6628.

3. Durability Rating:

No tape line shall be displaced, torn or missing. The tape shall have a durability rating of at least 4 (40% retained) when evaluated in the wheel path area after 1 year when tested in accordance with NTPEP, PMM Work Plan.

4. Skid Resistance:

The surface of the tape shall provide an initial minimum skid resistance value of 45 BPN when tested in accordance with ASTM E 303.

III. INSTALLATION

Marking configurations shall be installed in accordance with the latest edition of the "Manual on Uniform Traffic Control Devices" (MUTCD), the Virginia Supplement to the MUTCD and the Virginia Work Area Protection Manual (latest edition).

Markings shall be installed either under the guidance of the manufacturer's representative or by the manufacturer's certified installer.

Markings to be installed on existing asphalt concrete roadway surfaces or existing and new hydraulic cement concrete surfaces shall be applied in strict accordance with the manufacturer's recommendations for pavement surface preparation and installation techniques for non-embedded surface applications.

Upon delivery of the material to the Contractor, the Contractor shall store all tape in accordance with the manufacturer's requirements until the day of installation, unless otherwise approved. Tape shall not be installed if the material has exceeded its shelf life, has been improperly stored, has deteriorated or is otherwise damaged.

Type B, Class VI markings to be inlaid in new asphalt surfaces shall be installed in accordance with the manufacturer's recommendations for surface preparation and installation techniques. Temperature requirements of the asphalt concrete and the type and size of roller allowed shall be in accordance with the tape manufacturer's recommendations. The Contractor shall maintain the road design cross section unless otherwise modified by the contract requirements and ensure that markings are not degraded by the paving operations.

Markings shall not be installed directly over longitudinal pavement joints or existing markings.

IV. POST-INSTALLATION EVALUATION

Following installation, and prior to final acceptance, a visual evaluation will be made to assess the condition, retroreflectivity, and color of the marking tape. If problem areas are found, an inspection will be made by the Department, the Contractor, and tape manufacturer's representative to identify specific areas of concern. If needed, the suspect areas shall be tested by the Contractor and/or VDOT representative in accordance with VTM-125 to define the evaluation sections and the number of measurements needed. Acceptable test result shall meet the requirements for reflectivity and color specified in Section II, Initial Approval Requirements. Those markings found to be less than the values listed in Initial Approval Requirements for Retroreflectivity and Day and Nighttime Color (1 Year) shall be eradicated and replaced by the Manufacturer at no cost to the Department. Tape that exhibits signs of significant tearing, roll back, lifting, shrinkage, or other signs of poor adhesion will be replaced by the Contractor at no cost to the Department. All costs associated with testing the marking tape for retroreflectivity, color, and adhesion, including the cost of maintenance of traffic, shall be borne by the Contractor.

V. WARRANTY

The pavement marking tape shall be warranted against failure resulting from material defects regardless of method of manufacturer's prescribed application or pavement type. The material shall be warranted to retain its color, retroreflectivity, adherence to the pavement and shall be free

of other obvious defects or failures. All pavement marking tape that has failed to meet the warranty conditions shall be replaced with no additional payment.

The warranty shall cover all pavement striping materials (regardless of method of installation), labor, equipment, mobilization\demobilization, tools, incidentals required to remove (eradicate) and replace the pavement striping including maintenance of traffic during the removal and reinstallation operations.

Material guarantees that are given by the manufacturer shall be obtained by the Contractor and assigned to the Commonwealth in writing prior to final acceptance.

A. Retroreflectivity

White and Yellow longitudinal pavement marking tape shall remain effective for its intended use under normal traffic conditions and meet the minimum Coefficient of Retroreflected Luminance (R_L) of 100 millicandelas per square foot per footcandle [$(mcd \cdot ft^{-2}) \cdot fc^{-1}$] when measured in accordance with the requirements of ASTM E 1710 for the following duration:

Longitudinal Marking Tape Retroreflective Warranty Period

New Asphalt Concrete Pavement (Inlay)	6 Years
Existing Asphalt Concrete Pavement (Overlay)	6 Years
Portland Cement Concrete (PCC) Surfaces	6 Years

B. Color

Longitudinal pavement marking tape shall remain effective for its intended use under normal traffic conditions and meet the minimum Daytime and Nighttime color including Luminance Factor (Cap Y) per ASTM D 6628 for the following duration:

Longitudinal Marking Tape Color Warranty Period

New Asphalt Concrete Pavement (Inlay)	4 Years
Existing Asphalt Concrete Pavement (Overlay)	4 Years
Portland Cement Concrete (PCC) Pavement Surfaces	4 Years

C. Material Loss

Solid Longitudinal Line – more than five percent of the substrate is exposed in any 2000 ft section of pavement marking or 50 ft or more of continuous loss.

Broken Line – more than five percent of the substrate is exposed in any 2000 ft section of pavement marking or the loss of two consecutive skips.

VI. MEASUREMENT AND PAYMENT

Type B, Class VI pavement line marking tape will be measured in linear feet for the width specified and will be paid for at the contract unit price per linear foot, which price shall be full compensation for furnishing and installing pavement line markings, surface preparation, and testing and warranty.

Payment will be made under:

Pay Item	Pay Unit
Type B, Class VI pavement line marking (Width)	Linear foot
Type B, Class VI contrast pavement line marking (Width)	Linear foot

VIRGINIA DEPARTMENT OF TRANSPORTATION
SPECIAL PROVISION FOR
TEMPORARY CONSTRUCTION AND PERMANENT PAVEMENT MARKINGS

September 28, 2012

SECTION 704—PAVEMENT MARKING AND MARKERS of the Specifications is amended as follows:

Section 704.02—Materials is amended to add the following:

(d) **Flexible temporary pavement markers (FTPMs)** shall consist of products from the Department's current Approved List found in the Materials Division's *Manual of Instructions* (See Flexible temporary pavement marker (FTPM) or web site http://www.virginiadot.org/business/materials-download-docs.asp. All FTPMs shall be new product. FTPMs are suitable for use one year after the date of receipt when stored in accordance with the manufacturer's recommendations.

Section 704.03—Procedures is amended to replace the first six paragraphs with the following:

PERMANENT AND TEMPORARY PAVEMENT MARKINGS AND FLEXIBLE TEMPORARY PAVEMENT MARKERS (FTPMs)

- **Permanent pavement markings** are durable pavement markings that, when installed, provide final traffic guidance after all operations related to the project are complete in accordance with the provisions herein, Section 704 of the Specifications and as specified elsewhere in the Contract.

  Permanent pavement markings shall include skip-line and solid-line centerline markings, skip-line and solid-line lane-division markings and, solid-line edge-line markings installed on the newly-placed roadways once the surface has cured.

- **Temporary construction pavement markings** are construction zone pavement markings that, when installed, provide limited-duration traffic guidance until permanent pavement markings are installed in accordance with Section 704 of the Specifications, as specified elsewhere in the Contract, and as follows:

  Temporary construction pavement markings for surface treatment, slurry seal, latex emulsion treatment, and plant mix shall be:

  Type F, Class I pavement markings in accordance with the provisions of Section 704 of the Specifications except with a modified application for paved surfaces. Such modification shall consist of the light application of Type F, Class I temporary traffic paint, 8 to 10 mils thick representing 75 percent of the final pavement marking width and with 3 pounds of glass beads per gallon of material.

  Temporary construction pavement markings applied to planed (milled) surfaces to be overlaid shall consist of a light application of Type F, Class I temporary traffic paint 15 mils thick, representing 75 percent of the final pavement marking width and with 6 pounds of glass beads per gallon of material.

Glass beads shall conform to the requirements of Section 234 of the Specifications. Skip lines shall be applied in 8-foot lengths and approximately 32 foot gaps. Temporary Type F, Class I pavement markings shall be arranged and spaced on their installation so as to be completely covered by the application of permanent pavement markings. Failure to place Type F, Class I temporary markings at the application rate and spacing specified herein may result in the non-payment for such markings. No eradication of such modified Type F, Class I temporary markings will be required when the Contractor installs such temporary construction pavement markings as detailed herein and such markings have been in place for no less than 3 days prior to the application of permanent pavement markings.

Temporary construction pavement markings for plant mix shall also include:

- Type D construction pavement markings in accordance with the requirements of Section 704 of the Specifications.

- **Flexible temporary pavement markers (FTPMs)** are pavement markings that the Contractor may choose to substitute for Type D or Type F, Class I pavement markings. FTPMs may be used on surface treatment, slurry seal, latex emulsion treatment, and plant mix.

  FTPMs used for surface treatment, slurry seal or latex emulsion treatment operations shall include a removable material covering the reflective lens to protect the lens from being obscured or damaged by the paving operation.

  The color of FTPM units and their reflective surfaces (white or yellow) shall be the same as the temporary construction pavement markings for the type of application (skip-line, solid line) they are being used in substitution.

  FTPMs may be used to simulate skip-line and solid-line centerline markings and to simulate skip-line and solid-line lane-division markings (in accordance with the details furnished herein) installed on the newly-placed roadways once the surface has cured. **Please note:** Temporary edge-line markings will not be required.

Temporary construction pavement markings (and FTPMs) shall include skip-line and solid-line centerline markings, and skip-line and solid-line, lane-division line markings installed on the newly-placed roadways once the surface has cured or on milled surfaces when the time limits for unmarked pavement for the respective volumes of vehicles in Section 704 has been exceeded . **Please note:** Temporary edge-line markings will not be required.

MAINTENANCE OF TEMPORARY PAVEMENT MARKINGS AND FLEXIBLE TEMPORARY PAVEMENT MARKERS (FTPMs)

Maintenance of Temporary construction pavement markings applied to paved surfaces shall be in accordance with the following requirements:

While in place, temporary construction pavement markings sizes, shapes and retroreflectivity shall be at least minimally visible under full nighttime conditions from any point adjacent to such marking for no less than 120 feet (3 skip lines). If temporary construction pavement markings meet the requirement for this visual evaluation, no additional application (refreshing) is required. If temporary construction pavement markings are Type F, Class I and these markings do not meet this visual evaluation prior to the time limit for the application of permanent markings, such temporary markings shall be refreshed by the application of a lighter application (applied so as to enhance visibility but not as to require eradication before application of permanent markings) of

Type F, Class I marking at the Contractor's expense when required by the Engineer. Under such circumstances no payment for the eradication of pavement markings will be permitted if required before the application of permanent markings. If other types of permitted temporary pavement markings are used and these fail the visual evaluation or in any other respect are deficient prior to the time for the installation of permanent markings, these types shall be reapplied at the Contractor's expense when required by the Engineer. These requirements will apply until permanent pavement markings are installed in accordance with the time restrictions in Section 704.

FTPMs shall be installed and maintained in accordance with the manufacturer's recommendations and the requirements of the following:

The Contractor shall maintain FTPMs for the time period specified herein or until permanent pavement markings are installed in accordance with Section 704 of the Specifications. Damaged or missing FTPMs shall be replaced with new FTPMs of the same manufacturing type, color and model. No more than one FTPM may be damaged or missing out of every broken line simulated segment. No two consecutive FTPMs may be damaged or missing on a simulated solid line application, and no more than 30 percent of the FTPMs may be damaged or missing on any measured 100-foot segment of simulated solid line.

The acceptable ambient air temperature, ambient moisture condition and pavement surface condition prior to the installation of the appropriate FTPMs shall be in accordance with the manufacturer's recommendations, a copy of which shall be provided to the Engineer prior to installation.

Once applied, FTPMs will be considered for a single use. If a FTPM is removed before permanent markings are installed, it shall be replaced with a new FTPM. FTPMs may remain in place, undamaged, after installation for up to 14 consecutive days. When FTPMs are applied prior to pavement placement, such as with surface treatment, slurry seal and latex emulsion treatment, this 14 consecutive-day time limit shall begin at the time of actual installation of the FTPMs, not at the time of pavement placement completion. In no case shall any installed FTPMs be permitted to remain once time limits require permanent pavement marking installation.

PAVEMENT MARKING AND FLEXIBLE TEMPORARY PAVEMENT MARKER (FTPM) OPERATIONS

The Contractor shall have a Pavement Marking Technician, certified in accordance with the Department's Materials Certification Program for Pavement Marking, present during all pavement marking and marker operations except FTPM operations. When the Contractor chooses to substitute FTPMs for temporary construction pavement markings a certified Pavement Marking Technician will not be required for the FTPM operations.

- **Permanent Pavement Markings:** The type, class, installation procedures and time limits of permanent pavement markings shall be in accordance with the provisions specified herein and Section 704 of the Specifications.

  Installation of permanent pavement marking shall not exceed the 14 calendar-day time limitation between pavement placement and completion of permanent pavement marking installation. Once permanent pavement marking operations have begun; all skip-line and solid-line centerline markings and skip-line and solid-line lane-division markings shall be completed before the operation is stopped. While the installation of edge lines will not be required during

the same operation as permanent centerline and lane-division markings; edge lines shall be completed within 14 calendar days after the end of the workday when the pavement to be marked was placed.

- **Temporary construction pavement markings:** The type, class, installation procedures and time limits of temporary construction pavement markings shall be in accordance with the provisions specified herein and Section 704 of the Specifications.

  Temporary construction pavement markings, including skip lines, and solid lines shall be installed at the same locations that permanent pavement markings shall be installed.

  Once temporary construction pavement marking operations have begun, all skip-line and solid-line centerline markings, and skip-line and solid-line lane-division markings shall be completed before the marking operation is stopped. The installation of temporary edge-line markings will not be required.

  Installation and refreshing of (as authorized by the Engineer, if necessary) temporary construction pavement markings shall not affect the 14 calendar-day time limitation between pavement placement and completion of permanent pavement marking installation.

- **Flexible temporary pavement markers (FTPMs):** The type, installation procedures and time limits for the use of FTPMs shall be in accordance with the manufacturer's recommendations, the provisions specified herein and Section 704 of the Specifications.

  Prior to installing FTPMs the Contractor shall submit a plan for substituting FTPMs for temporary construction pavement markings to the Engineer for approval. The Contractor's plan for FTPMs shall be in accordance with the requirements and drawings designated as "**TYPICAL PLAN FOR FTPM PLACEMENT**" included herein.

  For surface treatment, slurry seal or latex emulsion treatment operations, the appropriate FTPMs shall be installed <u>prior</u> to placing new pavement or treatment. Upon completion of surface treatment, slurry seal or latex emulsion treatment placement, the Contractor shall remove the protective covering from the reflective lens of the FTPM prior to leaving the work site. Failure to remove such covering may result in the non-payment for that portion type (skip or solid) of temporary pavement marking.

  For plant mix operations, the appropriate FTPMs shall be installed on the newly-placed pavement <u>after</u> the pavement is thoroughly compacted, has cooled to the FTPMs manufacturer's recommended temperature for installation, and the surface has cured.

  Prior to installing FTPMs, the pavement surface shall be free of dirt, dust, debris, moisture, oil, and any residue that may be detrimental to successful application. If such is present, the Contractor shall prepare the pavement surface by air blowing or thorough brushing.

  FTPMs used to simulate skip lines and solid lines shall be installed at the same locations that permanent pavement markings shall be installed.

  Once FTPM operations have begun, all skip-line and solid-line centerline markings, and skip-line and solid-line lane-division markings shall be completed <u>before</u> the operation is stopped. Please note: Temporary edge-line markings will not be required.

  FTPMs shall be removed and properly disposed of when permanent pavement marking is required in accordance with the time limits specified herein. Used FTPMs removed from the pavement when no longer needed or permitted, including all containers, packaging, damaged

FTPMs and all other miscellaneous items of waste shall be appropriately disposed of in a properly permitted waste container in accordance with applicable local, state and federal laws and regulations.

Replacement of FTPMs, required to maintain temporary marking, shall not affect the 14 calendar-day time limitation between pavement placement and completion of permanent pavement marking installation.

For newly-placed roadways, permanent pavement marking, temporary construction pavement marking or FTPM installation shall be completed in accordance with the time limits specified below unless otherwise directed by the Engineer. Exceptions to the below time limits will be granted only for weather restrictions and for installation of Type B, Class VI and epoxy resin pavement markings on plant mix roadways. Installation of Type B, Class VI, pavement markings on plant mix roadways are not applicable to these requirements if they are inlaid with the last pass of the asphalt roller or directly after the asphalt roller using a separate roller. Installation of epoxy resin pavement markings on newly placed plant mix pavement shall not commence until after 24 hours of final surface placement.

PERMANENT PAVEMENT MARKINGS, TEMPORARY CONSTRUCTION PAVEMENT MARKINGS AND FLEXIBLE TEMPORARY PAVEMENT MARKERS (FTPMs) INSTALLATION TIME LIMITS ON ROADWAYS OPEN TO TRAFFIC:

Surface Treatment Operations

The Contractor shall maintain temporary construction pavement markings until the permanent pavement markings are installed. The Contractor shall sweep surface treated roadways prior to installation of permanent pavement markings as directed by the Engineer but no earlier than 7 days after completion of surface treatment placement. Permanent pavement marking installation shall be completed after sweeping but within 14 calendar days after the end of the workday when the surface treatment pavement surface to be marked was placed.

The following governs the installation time limits for temporary construction markings or FTPMs:

- **Roads having traffic volumes of 10,000 ADT or more:** Temporary construction pavement markings shall be installed within 24 hours after the end of the workday the unmarked new surface treatment is placed, and maintained until the permanent pavement markings are installed. If FTPMs are used they shall be installed prior to placement of surface treatment.

- **Roads having traffic volumes between 3,000 and 10,000 ADT:** Temporary construction pavement markings shall be installed within 48 hours after the end of the workday the unmarked new surface treatment is placed, and maintained until the permanent pavement markings are installed. If FTPMs are used they shall be installed prior to placement of surface treatment.

- **Roads having traffic volumes of 3,000 ADT or less:** Temporary construction pavement markings or FTPMs will not be required unless determined and authorized by the Engineer to be necessary to ensure the safety of the traveling public. If the Engineer requires FTPMs, such markers shall be installed prior to placement of surface treatment.

Slurry Seal or Latex Emulsion Treatment Operations

Permanent pavement marking installation shall be completed within 14 calendar days after the end of the workday when the slurry seal or latex emulsion treatment pavement surface to be marked was placed.

The following governs the installation time limits for temporary construction markings or FTPMs. The Contractor shall maintain temporary construction pavement markings until the permanent pavement markings are installed:

- **Roads having traffic volumes of 10,000 ADT or more:** Temporary construction pavement markings shall be installed within 24 hours after the end of the workday the unmarked new slurry seal or latex emulsion is placed, and maintained until the permanent pavement markings are installed. If FTPMs are used they shall be installed prior to placement of slurry seal or latex emulsion treatment.

- **Roads having traffic volumes between 3,000 and 10,000 ADT:** Temporary construction pavement markings shall be installed within 48 hours after the end of the workday the unmarked new slurry seal or latex emulsion is placed, and maintained until the permanent pavement markings are installed. If FTPMs are used they shall be installed prior to placement of slurry seal or latex emulsion treatment. .

- **Roads having traffic volumes of 3,000 ADT or less:** Temporary construction pavement markings shall be installed within 72 hours after the end of the workday the unmarked new slurry seal or latex emulsion is placed, and maintained until the permanent pavement markings are installed. If FTPMs are used they shall be installed prior to placement of slurry seal or latex emulsion treatment.

Plant Mix Operations

Prior to the end of the workday the Contractor shall determine whether permanent pavement markings can be installed within 24 hours after the end of the workday. If the Contractor determines that permanent pavement markings can be installed within such time limits, the permanent pavement markings shall be installed. If the Contractor determines that permanent pavement markings cannot be installed within such time limits he shall install and maintain temporary construction pavement markings or FTPMs until the permanent pavement markings are installed. **Permanent pavement marking installation shall be completed within 14 calendar days after the end of the workday when the plant mix pavement surface to be marked was placed.**

- **Roads having traffic volumes of 10,000 ADT or more:** Permanent pavement markings, temporary construction pavement markings or FTPMs shall be installed within 24 hours after the end of the workday the unmarked plant mix is placed.

- **Roads having traffic volumes between 3,000 and 10,000 ADT:** Permanent pavement markings, temporary construction pavement markings or FTPMs shall be installed within 48 hours after the end of the workday the unmarked plant mix is placed.

- **Roads having traffic volumes of 3,000 ADT or less:** Permanent pavement markings, temporary construction pavement markings or FTPMs shall be installed within 72 hours after the end of the workday the unmarked plant mix is placed.

Section 704.04—Measurement and Payment is amended to add the following:

Permanent pavement markings will be measured and paid for as the appropriate pavement line marking or pavement message marking pay items and pay units specified in the Contract. For roadways that are surface treated, the cost of sweeping the roadway prior to installing permanent pavement markings shall be included in the price bid for such pavement line or message marking items.

Temporary construction pavement markings, including **flexible temporary pavement markers (FTPMs)** used in substitution of temporary construction pavement markings, will be measured and paid for at the contract unit price per linear foot for the appropriate pavement line marking pay items and pay units specified in the Contract. Where FTPMs are used to simulate skip-line and solid-line centerline markings and skip-line and solid-line lane-division markings, the linear foot pay unit shall represent all FTPMs required in accordance **TYPICAL PLAN FOR FTPM PLACEMENT** and the requirements herein to simulate that solid or skip line temporary construction line marking. This cost shall include furnishing and application of the temporary construction pavement markings or FTPMs, surface preparation, furnishing, installing and maintaining temporary construction pavement markings (or FTPMs) for the entire 14 calendar day time limit.

Please note: Quantities for temporary construction markings listed in the contract are based on one cycle of marking for the 14 day time limitation before permanent markings must be installed. If temporary markings require refreshing or reapplication before the expiration of the 14 day time limit for the application of permanent markings, refreshing or reapplication shall be at the Contractor's expense. Such prices shall also include quality control daily logs, traffic control and all materials, labor, equipment and incidentals.

Payment will be made under:

Pay Item	**Pay Unit**
Temporary construction pavement markings and (FTPMs)	Linear Foot
Temporary construction pavement markings	Square Foot

TYPICAL PLAN FOR FTPM PLACEMENT

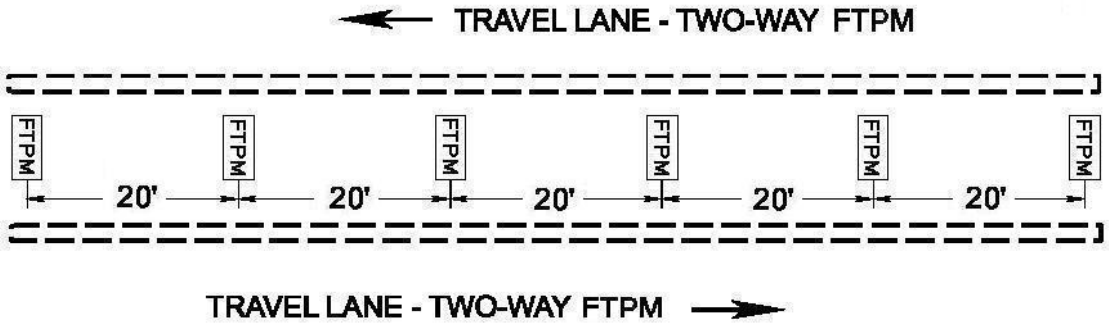

SIMULATING A SOLID CENTER LINE - NO PASSING ZONE
PLAN 1

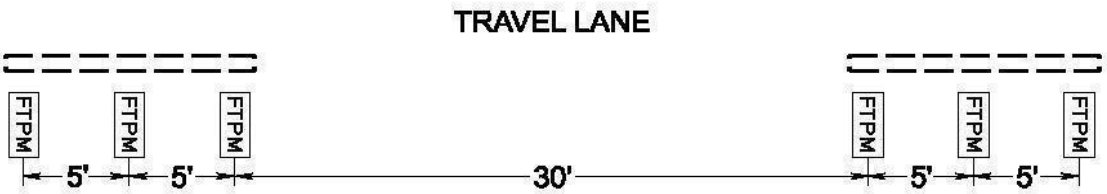

SIMULATING A BROKEN LINE (40' CYCLE)
TWO LANE ROADWAY - TWO-WAY FTPM
MULTI LANE ROADWAY - ONE-WAY FTPM
PLAN 2

VIRGINIA DEPARTMENT OF TRANSPORTATION
2007 ROAD AND BRIDGE SUPPLEMENTAL SPECIFICATIONS

SUPPLEMENTAL SECTION 700—GENERAL

SECTION 700—GENERAL of the Specifications is amended as follows:

Section 700.02(i) the first sentence is replaced with the following:

Poles, posts, and overhead sign structures shall conform to the following:

Section 700.02(i)2. is replaced with the following:

2. **Overhead sign structures, signal poles (mast arm and strain), and high-mast lighting poles** shall be steel.

Section 700.02(i)4. **Poles, posts, and overhead sign structures** is replaced with the following:

4. **Sign posts** shall be wood or steel. Square tube post shall be hot-rolled, carbon sheet steel, structural steel quality, conforming to the requirements of ASTM A 1011, Grade 50 except the yield strength after cold-forming shall be 60,000-psi minimum. Steel mounting brackets shall conform to the requirements of ASTM A36. Posts (inside and outside) shall be galvanized in accordance with the requirements of ASTM A653, Coating Designation G-90.

Section 700.02(i) the first and second paragraph is replaced with the following:

Lighting, signal, pedestal poles; sign posts; and overhead sign structures not designed to support variable message signs shall conform to the requirements of the 1994 Edition of AASHTO's *Standard Specifications for Structural Supports for Highway Signs, Luminaires, and Traffic Signals.*

Overhead sign structures, including "butterfly" structures, designed to support variable message signs shall conform to the requirements of the 2001 Edition of AASHTO's *Standard Specifications for Structural Supports for Highway Signs, Luminaires, and Traffic Signals* and the following clarifications:

- Basic wind speed shall be used in the designs. The alternate method for wind pressures provided in Appendix C shall not be used.
- When the installation location of the structures lies between isotachs, the basic wind speed shall be determined by using the higher adjacent isotach.
- Any optional design parameters indicated in the AASHTO specification that are "allowed when acceptable to the owner" shall not be used for the designs.

Steel poles, posts, and overhead sign structures shall be hot-dip galvanized after fabrication. Except when shop painting is required, steel poles and posts shall be given one shop coat of primer and two field coats of paint and the galvanization finish of overhead sign structures shall be field treated for paint retention and two coats of paint applied.

Section 700.04(a)1. **Grounding Electrodes** is amended to replace the seventh paragraph with the following:

- The Contractor shall install a junction box at the primary grounding electrode location for access to the electrode for connection and testing. Grounding electrode conductors shall be installed under the bottom flange of the junction box. The grounding electrode shall be centered in the bottom of the junction box with a minimum of 6 inches exposed. The junction box cover shall have the letters "VDOT ELEC" cast in the depression on the top.

Section 700.04(a)2. **Grounding electrode testing** is replaced with the following:

2. **Grounding electrode testing:** Primary grounding electrodes shall be tested after each 10-foot grounding electrode and/or section thereof is installed using the fall of potential (three-point measurement) method. After the primary grounding electrode is installed and tested, the Contractor shall connect to the augmented electrode(s) to conduct a system test. The Contractor shall disconnect the grounding electrode conductor from the service equipment ground bus and bonding bushing before testing the grounding electrodes/system. The Contractor shall test the grounding electrode as required by the manufacturer's instructions for the type of earth testing equipment. The Contractor shall record the readings on a form provided by the Regional Traffic Engineering Office. The completed form shall be signed and submitted to the Engineer after installation of the electrical service grounding.

Section 700.04(e) **Poles, Posts, and Sign Structures** is amended to include the following:

Square tube sign post shall have 7/16-inch (+/- 1/64-inch) openings or knockouts spaced 1-inch on centers on all four sides. When specified on the plans a 2 3/16-inch inner-post shall be used with the 2 ½–inch post for additional strength. The inner-post shall be no less than 6 feet long.

Where posts are to be mounted on a retaining wall or barrier, the Contractor shall provide a mounting bracket, fabricated from steel conforming to the requirements of ASTM A36 and hot dipped galvanized in accordance with ASTM A123. Mounting bracket shall be designed so no connection to the barrier is made on the traffic side of the barrier and shall be secured to the barrier and wall using stainless steel chemically adhesive anchors.

Section 700.04(g)1. **Electrical service and lighting conductor identification** is amended to replace the fifth paragraph with the following:

Color-coding shall be as follows:

2-wire circuits, 120 Volts; 3-wire circuits, 120/240 Volts; 3-phase, 4-wire wye circuits, 208/120 Volts and; 3-phase, 4-wire delta circuits, 240 Volts

Circuit Designation	Color Code
Phase A or Line A	Black
Phase B or Line B	Red or orange*
Phase C	Blue
Grounded Conductor (Neutral)	White or gray** (see exception above)
Equipment Grounding Conductor	Bare, green, or green with one/more yellow stripes

3-phase, 4-wire wye circuits, 480/277 Volts; 3-phase, 3-wire delta circuits, 480 volts

Circuit Designation	Color Code
Phase A	Brown
Phase B	Orange
Phase C	Yellow

Grounded Conductor (Neutral)	White or gray** (see exception above)
Equipment Grounding Conductor	Bare, green, or green with one/more yellow stripes

* For 3-phase, 4-wire delta circuits, Phase B shall be the high leg and shall be orange.
** For outer covering of conductors of different systems that is contained within the same enclosure, refer to Article 200 of the NEC.

Section 700.04(h) **Conduit Systems** is amended to include the following:

When a conduit enters a box, fitting, or other enclosure, a bushing shall be provided to protect the conductor cable from abrasion unless the design of the box, fitting, or enclosure is such to afford equivalent protection of the conductor cable.

Section 700.04(h)2. **Buried conduit systems** is amended to replace the second paragraph with the following:

When conduit is to be installed under an existing roadway, entrance, or fixed object and open cutting is not permitted, conduit shall be installed by an approved directional boring method. Conduit for the directional boring method shall be PVC designed specifically for the directional boring operation or high-density PE. When the plans show more than one conduit at a location to be installed by directional boring, with the Engineers approval the Contractor my elect to install multiple conduits into a single bore at no additional cost to the Department.

MAXIMUM PILOT OR BACK REAMER BIT DIAMETER WHEN ROATED 360^0	
NOMINAL INSIDE PIPE DIAMETER INCHES	**BIT (REAMER) DIAMETER INCHES**
1 - 2"	4" BORE HOLE
2 - 2"	5" BORE HOLE
3 - 2"	8" BORE HOLE
1 - 3"	5" BORE HOLE
2 - 3"	6 ½ " BORE HOLE
3 - 3"	8" BORE HOLE
1 - 4"	6 ½ " BORE HOLE

The Contractor shall use an approved stabilizing agent mixed with potable water to create the drilling fluid (mud slurry) for lubrication and soil stabilization. The fluid viscosity may vary to best fit the soil conditions encountered. Do not use any chemicals or polymer surfactants in the drilling fluid without written consent from the Engineer. The Contractor shall certify to the Engineer in writing that any chemical added to the drilling fluid is environmentally safe and not harmful or corrosive to the conduit system.

The Contractor may elect to use the jacked method to install a pipe sleeve for installation of the required conduit at no additional cost to the Department.

If an obstruction is encountered during the directional boring or jacking operation that requires abandonment of the hole (tunnel), it shall be backfilled with a flowable fill immediately, at no additional cost to the Department.

Section 700.04(i) **Junction Box Covers** is replaced with the following:

(i) **Junction Boxes** shall be installed as follows:

The junction box site shall be excavated such that the depth of the excavation shall be the height of the junction box plus at least twelve inches to allow for bedding aggregate material and such that the width shall be six to eight inches wider than the junction box.

Bedding material shall be No. 68, No. 78, or No. 8 aggregate or Crushed Glass conforming to No. 78, or No. 8 gradation requirements. Aggregate shall be a minimum of twelve inches in depth and entirely cover the bottom of the junction box excavation. The bedding aggregate shall be leveled and tamped prior to installing the junction box.

Junction box shall be installed and leveled to grade prior to backfilling.

Prior to backfilling the interior of polymer concrete junction boxes (JB-S1, JB-S2 and JB-S3) shall be braced with 2 inch by 4 inch lumber using two braces across the width and one brace across the length of the box or as required by the manufacturer. Bracing shall be installed to facilitate removal once back filling and compaction have been completed. The Contractor shall remove internal bracing after the backfilling and compacting operation has been completed.

The cover of the junction box shall be installed prior to backfilling.

The junction box shall be backfilled and compacted around its perimeter utilizing six to eight inch horizontal lifts to where the concrete collar is to begin. Once the concrete collar has cured the remaining area around the collar shall be backfilled and compacted as stated above. Compaction shall be at least ninety percent of the theoretical maximum density as defined in Section 101.02 of the Specifications. A mechanical tamping device shall be used to compact the backfill and soil layer by layer around the perimeter of the junction box. The wheel of a backhoe or other type vehicle shall not be used for compaction of backfill and soil. The internal bracing shall be removed after backfilling and compaction has been completed. The area around the junction box shall be graded and restored as stated in the Specifications.

Junction boxes shall not be installed or backfilled in standing water. Backfill material shall be free of large stones, wood or other debris and shall not be saturated with water.

If a special tool or wrench is required to remove the cover, the Contractor shall furnish the Engineer with five such tools.

Section 700.04—Procedures is amended to include the following:

(k) **Anchor Bolts**

Traffic control device foundations shall have a bolt template positioned for correct orientation of the structure with respect to the structure location and roadway alignment and to maintain the anchor bolts vertical (plumb) and level during construction.

Bolt and/or anchor nut covers shall not be installed on any traffic control device structures, unless otherwise specified on the plans.

Anchor bolts in double-nut connections shall extend a minimum of ¼" past the second top nut.

The threaded portion of the anchor bolts shall be lubricated with beeswax, the bolt manufacturer's recommended lubricant, or other lubricant as approved by the Engineer for proper tensioning before the structure is installed.

Double-nut connections installation procedure: (A minimum of three nuts and two hardened washers shall be provided for each anchor bolt.)

1. If bolt(s) are not plumb (vertical), determine if beveled washer(s) may be required prior to erection of the structure. Beveled washers shall be used on top of the leveling nut and/or under the first top nut if any face of the base plate has a slope greater than 1:20 and/or any nut could not be brought into firm contact with the base plate.

2. Clean and lubricate the exposed thread of all anchor bolts, nuts and all bearing surfaces of all leveling nuts. Re-lubricate the exposed threads of the anchor bolts and the threads of the nuts if more than 24 hours has elapsed since earlier lubrication, or if the anchor bolts and nuts have become wet since they were first lubricated.

3. Verify that the nuts can be turned onto the bolts the full length of the threads by hand.

4. Turn the leveling nuts onto the anchor bolts and align the nuts to the required elevation shown on the shop drawings. The maximum distance between the bottom of the leveling nut and the top of the foundation shall be one inch.

5. Place structural hardened washers on top of the leveling nuts (one washer corresponding to each anchor bolt).

6. The post or end frame shall be plumbed or aligned as shown on the shop drawings. The maximum space between the bottom of the base plate and the top of the foundation shall be the diameter of the anchor bolt plus one inch. Place structural hardened washers on top of the base plate (one washer corresponding to each anchor bolt), and turn the first top nuts onto the anchor bolts.

7. Tighten first top nuts to a snug-tight condition in a star pattern. Snug-tight is defined as the maximum nut rotation resulting from the full effort of one person using a 12-inch long wrench or equivalent. A star tightening pattern is one in which the nuts on opposite or near-opposite sides of the bolt circle are successively tightened in a pattern resembling a star.

8. Tighten bottom leveling nuts to a snug-tight condition in a star pattern.

9. At this point, verify again if beveled washers are necessary using the criteria from step 1. If a beveled washer is required, remove the structure if necessary, add the beveled washer(s) and retighten first top nuts and bottom leveling nuts (in a star pattern) to a snug-tight condition.

10. Mark the reference position of each first top nut in a snug-tight condition with a suitable method on one flat surface of the nut with a corresponding reference mark on the base plate at each bolt before final tightening of the first top nuts. Then rotate the first top nuts incrementally to one half the required nut rotation specified in Table 1 using a star pattern until achieving. Rotate the first top nuts again, using a star pattern, to the full required nut rotation specified in Table 1. For example, if total rotation from snug tight is 1/6 turn (60°), rotate 30° in each cycle.

Table 1

Anchor Bolt Diameter, (in.)	Nut Rotation beyond Snug - Tight	
	ASTM F 1554 Grade 36 (M314)	ASTM F 1554 Grade 55 (M 314)
≤1½	1/6 turn (60°)	1/3 turn (120°)
>1½	1/12 turn (30°)	1/6 turn (60°)

Nut rotation is relative to anchor bolt. Anchor bolt nut tensioning shall not exceed plus 20°.

Unified Thread Standard (UNC) tensioning is applicable.

Lock nuts and/or split washers shall not be allowed with anchor bolts.

11. Anchor bolt connections that have been tightened shall be inspected in the presence of the Engineer by a calibrated torque wrench. The torque wrench shall be used to verify that a torque at least equal to the verification torque as provided in Table 2 is achieved. A minimum of every other bolt shall be inspected.

Table 2

Anchor Bolt Diameter, (in.)	Verification Torque	
	ASTM F 1554 Grade 36 (M314) Tension/Torque kips/ft-lbs.	ASTM F 1554 Grade 55 (M 314) Tension/Torque kips/ft-lbs.
1	18 / 180	27 / 270
1 1/4	28 / 350	44 / 550
1 1/2	41 / 615	63 / 945
1 3/4	55 / 962	86 / 1,505
2	73 / 1,460	113 / 2,260
2 1/4	94 / 2,115	146 / 3,285
2 1/2	116 / 2,900	180 / 4,500
2 3/4	143 / 3,932	222 / 6,105
3	173 / 5,190	269 / 8,070
3 1/4	206 / 6,695	320 / 10,400
3 1/2	242 / 8,470	375 / 13,125
3 3/4	280 / 10,500	435 / 16,312
4	321 / 12,840	499 / 19,960

12. Install second top nut on each bolt to snug tight.

13. Contractor shall perform an Ultrasonic test on all anchor bolts in accordance with ASTM E114- Ultrasonic Pulse Echo Straight Beam Testing by the Contact Method. Ultrasonic testing personnel shall be qualified in accordance with ASNT SNT-TC-1A Level II and certified by VDOT Materials Division. Equipment shall be qualified in accordance with AWS D1.5 Section 6, Part C Anchor bolts shall have no indications that are above 10% Full Screen Height at the prescribed scanning level. All indications shall be noted on the report and reported to the Project Engineer and VDOT Materials Division.

Section 700.05—Measurement and Payment for Concrete foundations is replaced with the following:

Concrete foundations will be measured and paid for in units of each or cubic yards of concrete as applicable. When paid for in cubic yards of concrete, no payment will be made for concrete in excess of the cubic yards of concrete required by the foundation design unless otherwise approved by the Engineer. This price shall include foundation design, concrete, reinforcing steel, stub poles, anchor bolts, bolt circle templates, lubricant, torque, UT testing, grounding equipment, conduits, excavating, backfilling, compacting, disposing of surplus and unsuitable material, and restoring existing areas.

Section 700.05—Measurement and Payment for Overhead and bridge-mounted sign structures is replaced with the following:

Overhead sign structures will be measured in units of each and will be paid for at the contract unit price per each. This price shall include structural units and supports, hand holes and covers, grounding lugs, electrical systems including conduit and fittings, and identification tags.

Section 700.05—Measurement and Payment for, Junction boxes is replaced with the following:

Junction boxes will be measured in units of each and will be paid for at the contract unit price per each. This price shall include concrete collars, frames and covers, tools to remove the cover, ground rods, ground conductors, grounding lugs, knockouts, cable racks, bracing, aggregate, excavating, backfilling, compacting, disposing of surplus and unsuitable material, and restoring existing areas.

VIRGINIA DEPARTMENT OF TRANSPORTATION
2007 ROAD AND BRIDGE SUPPLEMENTAL SPECIFICATIONS

SUPPLEMENTAL SECTION 701—TRAFFIC SIGNS

SECTION 701—TRAFFIC SIGNS of the Specifications is amended as follows:

Section 701.03—Procedures is amended as follows:

Section 701.03(a)2. **Sign panels** is amended to include the following:

Extruded sign panels shall be in accordance with the drawings and Section 229.02(c) of the Specifications.

Section 701.03(d) **Erection** is amended to replace the first sentence of the first paragraph with the following:

Vertical clearance for overhead sign structures shall be no less than 19 feet 0 inch and no more than 21 feet 0 inch from the bottom of the lowest mounted sign panel to the crown of the roadway unless otherwise specified on the plans

Section 701.03(d) **Erection** is amended to delete the last sentence of the first paragraph:

Section 701.03(d) **Erection** is amended to delete the last paragraph:

Section 701.03(d) **Erection** is amended to include the following:

Overlay panels shall be preformed on a flat surface with no protruding bolts or bolt heads on the existing sign panel.

Overlay of overhead sign panels shall be in accordance with the plan details.

VIRGINIA DEPARTMENT OF TRANSPORTATION
2007 ROAD AND BRIDGE SUPPLEMENTAL SPECIFICATIONS

SUPPLEMENTAL SECTION 703—TRAFFIC SIGNALS

SECTION 703—TRAFFIC SIGNALS of the Specifications is amended as follows:

Section 703.02—Equipment is amended as follows:

Section 703.02(g)**—Detectors** is amended to delete 1. Magnetic detectors and 2. Magnetic detector amplifiers.

Section 703.03—Procedures is amended as follows:

Section 703.03(e) **Installing signal heads** is amended to replace the last sentence of the second paragraph with the following:

Joints shall be rendered weatherproof by an approved method.

Section 703.03(g)1.**—Magnetic Detectors** is deleted.

Section 703.04—Measurement and Payment is amended as follows:

Section 703.04—Measurement and Payment is amended to delete the sixth paragraph, **Magnetic detector sensing elements** and the fourteenth paragraph, **Cable terminal enclosures**.

Section 703.04—Measurement and Payment is amended to include the following:

Pedestrian actuation will be measured in units of each and will be paid for at the contract unit price per each. This price shall include pedestrian pushbutton, fittings, sign(s), conduit, condulet when required, supplementary grounding electrode, grounding conductor, and concrete foundation when required.

Flashing beacon will be measured in units of each and will be paid for at the contract unit price per each. This price shall include galvanized post, conduit, concrete foundation, grounding electrode, ground conductor, signal heads, breakaway connectors, sign panels and mounting hardware.

Payment will be made under:

Pay Item	**Pay Unit**
Pedestrain actuation (Standard)	Each
Flashing beacon (Standard)	Each

SUPPLEMENTAL SECTION 704—PAVEMENT MARKINGS AND MARKERS

SECTION 704—PAVEMENT MARKINGS AND MARKERS of the Specifications is amended as follows:

TABLE VII-1 PAVEMENT MARKINGS is replaced with the following:

TABLE VII-1
Pavement Markings

Type	Class	Name	Surface Temp. at Time of Application	Film Thickness (mils)	Pavement Surface	Application Limitations
A		Traffic paint	50°F+	15 ± 1 when wet	AC HCC	May be applied directly after paving operations
B	I	Thermoplastic Alkyd	50°F+	90 ± 5 when set	AC	May be applied directly after paving operations
	I	Thermoplastic Hydrocarbon	50°F+	90 ± 5 when set	AC	Do not apply less than 30 days after paving operations
	II	Preformed Thermoplastic	50°F+	120-130	AC HCC	Manufacturer's recommendations
	III	Epoxy resin	50°F+	20 ± 1 when wet	AC HCC	Pavement surface needs to be at least 1 day old
	IV	Plastic-backed preformed Tape	(Note 1)	60 - 90	AC HCC	Manufacturer's recommendations
	VI	Profiled preformed Tape	(Note 1)	(Note 1)	AC HCC	Manufacturer's recommendations
	VII	Polyurea	(Note 1)	20 ± 1 when wet	AC HCC	Manufacturer's recommendations
D	I & II	Removable tape	(Note 1)	(Note 1)	AC HCC	Construction zone pavement marking
E		Removable Black tape (Non-Reflective)	(Note 1)	(Note 1)	AC	Construction zone pavement marking for covering existing markings
F	I & II	Temporary markings	(Note 1)	40 max	AC HCC	Construction zone pavement marking

Note 1: In accordance with manufacturer's recommendation.

SAW CUT — Section 703.04—Measurement and Payment of the Specifications is amended to replace the ninth paragraph (**Saw cuts**) with the following:

Saw cut will be measured in linear feet for the width specified and will be paid for at the contract unit price per linear foot. This price shall include cutting, cleaning, drilling, disposing of surplus material, furnishing and installing backer rods, and loop sealant material.

Pay Item	**Pay Unit**
Saw Cut (Width)	Linear foot

10-2-08a (SPCN)

VIRGINIA DEPARTMENT OF TRANSPORTATION
SPECIAL PROVISION
PREFORMED THERMOPLASTIC PAVEMENT MARKINGS

November 29, 2011b

I. DESCRIPTION

These specifications provide criteria for furnishing and installing durable, retroreflective preformed thermoplastic material for use in installing pavement markings, message markings and pavement marker applications. Lines, legends and symbol material shall be capable of being affixed (fusing) to asphalt concrete (bituminous) pavements by the use of a heating source.

II. DETAIL REQUIREMENTS

Preformed thermoplastic marking materials shall be in accordance with the Department's approved products list.

Material shall be a preformed, beaded reflectorized thermoplastic pavement marking material that is applied to the road surface using a heat source such as a propane torch. Upon cooling to normal pavement temperature, the material shall produce a reflectorized message, legend or symbol of specified thickness, width or design capable of resisting deformation to traffic. Material shall not distort because of temperature variations prior to application. The Contractor shall ensure that the pavement surface is clean, dry and free of debris or other deleterious material which may affect performance by removing all dust, dirt, loose particles heavy oil residues and other deleterious materials that may affect proper installation. Manufacturer\Supplier must enclose application instructions (multilingual) in with each box/package of materials.

Material shall be suitable for use on asphalt concrete surfaces and shall be capable of being applied to previously applied pavement marking material of the same composition under normal conditions of use. Marking material must be capable of conforming to pavement contours, breaks and faults through the action of traffic within the range of temperatures as specified herein. The markings shall have resealing characteristics, such that it is capable of fusing with itself and previously applied thermoplastic when heated with the heat source. In addition to being capable of fusing itself over existing markings such new markings shall be furnished to match the size dimensions and shape of existing markings.

Material shall not exude fumes that are toxic or injurious to persons, animals or property when heated to the application temperature.

Material shall withstand air and roadway temperature variations from 0 degrees F to 140 degrees F without deforming, bleeding, staining, discoloring and shall maintain their original dimensions and placement without chipping, spalling, or cracking. Material shall not deteriorate because of contact with sodium chloride, calcium chloride, mild alkalies and acids, or other ice control material; oil in the pavement material; or oil and gasoline drippings from vehicles.

Material, except for reversible arrows, shall have factory applied coated surface and intermixed beads. Intermixed beads shall be uniformly distributed throughout the material at a minimum of 30 percent by weight. Reversible arrows shall have intermixed beads only. Surface beads for reversible arrows shall conform to the requirements of Section 234 and be furnished and applied by the installer.

Initial skid resistance value shall be at least 45 BPN when tested in accordance with ASTM E 303.

Retained retroreflectivity, durability and color of markings shall conform to the following requirements after being installed on a northern region test deck for one year.

Retroreflectivity: Photometric quantity to be measured is coefficient of retroreflected luminance (R_L) in accordance with the requirements of ASTM E 1710. R_L shall be expressed in millicandelas per square foot per foot per foot-candle and shall be at least the following values when measured in the wheel path area.

	Initial	**Retained (after 1 Year)**
White	300	90
Yellow	200	70

Durability: Material shall have a durability rating of at least 4 when determined in the wheel path area.

Retained Daytime Color: Retained daytime color of markings shall conform to the requirements of ASTM D 6628.

Initial Nighttime Color: Initial nighttime color of preformed thermoplastic plastic pavement marking material shall conform to the following CIE chromaticity coordinate requirements when tested in accordance with VTM 111.

CIE CHROMATICITY COORDINATE LIMITS (INITIAL WITH DROP-ON BEADS)								
Color	**1**		**2**		**3**		**4**	
	x	**y**	**x**	**y**	**x**	**y**	**x**	**y**
Yellow	0.486	0.439	0.520	0.480	0.560	0.440	0.498	0.426

Material shall not be formulated with any compounds of the heavy metals listed in 40 CFR 261.24 Table 1 except that barium sulfate is allowed. Total heavy metal levels, with the exception of barium sulfate, shall not exceed 20 times the specified regulatory limits.

Amount and type of yellow pigment and inert filler for yellow material shall be at the option of the manufacturer provided the material complies with all other requirements of this specification.

Material to be supplied may be of either of the following types:

- Type where the manufacturer requires preheating of the roadway surface to a specified temperature prior to installation of the preformed thermoplastic material.

- Type where the manufacturer requires preheating of the roadway surface prior to installation of the preformed thermoplastic material to only remove moisture when necessary.

Current manufacturer installation instructions will be used to determine which type material a manufacturer produces. A copy of the instructions shall be provided to the Engineer.

When installing over existing thermoplastic markings new preformed thermoplastic pavement markings shall conform to the shape and completely adhere (fuse) to the old existing markings. Materials on this list determined not to conform to these requirements based on this verification testing will not be acceptable.

Materials failing any of the requirements of this provision will be deemed unacceptable and the Contractor shall then furnish acceptable materials meeting these requirements at no additional cost to the contract.

III. DESIGN APPLICATIONS

Crosswalks and stop lines shall be installed using preformed thermoplastic pavement markings conforming to the details and dimensions of the contract. Crosswalk lines shall be one foot wide and stop lines shall be two feet in width.

Pavement message markings and symbols shall be installed using preformed thermoplastic pavement markings conforming to the designs and dimensions detailed in the contract.

IV. MEASUREMENT AND PAYMENT

Preformed thermoplastic pavement marking will be measured in linear feet or each depending on the configuration of the message marking (linear, message or symbol) as designated in the contract and will be paid for at the contract unit price per linear foot or each as specified by the individual message marking. This price shall include furnishing pavement marking material, message or symbol, surface preparation, primer-sealer, additional surface glass beads, installation, daily log (Form C-85), guarding devices, or other incidentals recommended for installation by the manufacturer.

Payment will be made under:

Pay Item	Pay Unit
Preformed (width) Thermoplastic	Linear foot or Each

VIRGINIA DEPARTMENT OF TRANSPORTATION
SPECIAL PROVISION FOR
CONSTRUCTION QUALITY CONTROL PLAN

August 29, 2008

I. GENERAL

Minimally, the Construction Quality Control (QC) Plan must address the following:

1. Describe the Contractor's Quality Control organization, including the number of full-time equivalent employees or Sub-Contractors with specific Quality Control responsibilities, including an organizational chart showing lines of authority and reporting responsibilities.
2. List by discipline the name, qualifications, duties, responsibilities and authorities for all persons proposed to be responsible for Construction Quality Control;
3. Provide Quality Control sampling, testing and analysis plan with methods that include a description of how random locations for testing and sampling are determined;
4. Identify the laboratory(s) to be used for each type of testing;
5. Specify documentation for QC activities;
6. Provide procedures to meet contract requirements for corrective action when QC criteria are not met.

The Contractor's QC Plan shall utilize industry standard inspection procedures as well as those outlined in VDOT's Construction Manual, Materials Manual of Instruction, Road and Bridge Specifications and the minimum requirements outlined in Table 3, below.

II. CITY/VDOT RESPONSIBILITIES

Quality Assurance (QA) and Independent Assurance (IA) sampling and testing shall be performed by the City and/or VDOT to validate the Contractor's QC sampling and testing.

The City shall hold final authority for determining the acceptance of materials incorporated into the Project. The acceptance decision shall consider results of the Contractor's QC sampling and testing at specified frequencies and locations, the City/VDOT QA and IA sampling and testing at specific frequencies and locations, inspection by the City of the attributes and processes that may affect the quality of the finished product and any dispute resolution procedures to resolve discrepancies between the verification and Contractor's sampling and testing.

III. CONTRACTOR'S RESPONSIBILITIES

The Contractor shall be responsible for the quality of construction and materials incorporated into the Project. The Contractor's QC measures shall ensure that operational techniques and activities provide material of acceptable quality. Contractor sampling and testing shall be performed to control the processes and determine the degree of material compliance with the Contract.

The following Table 1 details comparison tolerances for testing which will trigger the referee and disputes processes:

Table 1 – QC/QA/IA Tolerances		
Tests	**Tolerance**	**Source**
Soil/Aggregate Wet Density using Nuclear Gauge in Direct Transmission	CL Soil – 1.91 pcf ML Soil – 2.15 pcf SP Soil – 1.86 pcf	AASHTO T 310
Soil/Aggregate Density using Sand Cone	2.0 pcf	ASTM D1556
Soil/Aggregate Moisture using Nuclear Gauge in Backscatter Position	CL Soil – 1.44 pcf ML Soil – 1.63 pcf SP Soil – 2.10 pcf	AASHTO T 310
Soil/Aggregate Moisture determined by Oven Dry	14% difference*	ASTM D2216
One Point Proctor - Density	4.5 pcf	AASHTO T 99
One Point Proctor - Moisture	15% difference*	AASHTO T 99
Concrete Slump	0.82 inch for 1" to 2" slump 1.10 inch for 3" to 4" slump 1.50 inch for 5" to 6" slump	ASTM C143
Concrete Air	0.8% points using pressuremeter 32% difference using rollermeter	AASHTO T 152 AASHTO T 196
Concrete Temperature	1 degree F	ASTM C1064
Concrete Unit Weight	2.31 pcf	AASHTO T 121
Concrete Permeability	51% difference*	AASHTO T 277
Concrete Strength	8% difference in the average of 3 cylinders	ASTM C39 ASTM C31
Asphalt Bulk Specific Gravity	0.02	AASHTO T 166
*Percent difference calculation shall be % diff $\leq$({absolute value[W_1-W_2]} / {[1/2] * [W_1+W_2]}) * 100		

The testing of referee samples to resolve disputes shall be performed by the City/VDOT.

IV. PREPARATORY INSPECTION MEETINGS

Prior to the start of work, the Contractor shall hold a Preparatory Inspection Meeting to ensure that all project personnel have a thorough understanding of the upcoming work. The purpose of the Preparatory Inspection Meeting is to provide coordination and communication between the Contractor's production personnel, QC personnel and the City. Pay items correspond to the sections of VDOT's Road and Bridge Specifications, such as clearing and grubbing, aggregate base material and asphalt concrete items.

V. CONTRACTOR SAMPLING AND TESTING

Contractor shall perform all Quality Control (QC) testing and sampling for the project. All QC testing and sampling shall be in accordance with Virginia Department of Transportation (VDOT) 2007 Road and Bridge Specifications and the Materials Division Manual of Instructions, except that sampling and testing frequencies, at a minimum, shall conform to "Locality QC/QA/IA Frequency and Acceptance" tables included herein. All QC testing and sampling shall be performed by technicians certified by VDOT and all laboratory testing shall be performed by AASHTO Materials Reference Laboratory (AMRL) and Cement and Concrete Reference Laboratory (CCRL) accredited laboratories. All materials used in the project shall meet the requirements of the 2007 VDOT Road and Bridges Specifications as well as the Special Provisions contained herein. All materials utilized on the project shall be from VDOT approved sources and all mix designs shall be VDOT approved.

Contractor shall furnish copies of all test results to the Project Manager or other authorized City representative within 24 hours of completing the test of the acquired sample or the next day of business.

VI. RECORDS

The Contractor shall prepare separate test reports meeting the requirements of AASHTO R18 or may use the current appropriate VDOT forms. The Contractor shall also prepare, maintain and submit completed test records and final materials certification in accordance with the requirements of VDOT's Construction Manual, Materials Manual of Instruction and this Section.

VII. ACCEPTANCE

All plant manufactured materials shall be tested at the plant and accepted by VDOT in accordance with VDOT's QA/QC Programs as described in the Materials Manual of Instruction. Field testing for density shall be the responsibility of the Contractor for QC. See Section VIII VDOT Inspected and Tested Items for more information.

A cooperative effort by the Contractor and the City to identify the cause of any non-specification material or any discrepancy in the test results will include the following actions:

i. A check of test data, calculation and results;
ii. Observation of the Contractor's sampling and testing by the City;
iii. Check of test equipment by the City.

When the source of test result discrepancies between the Contractor and the City/VDOT cannot be resolved, a referee split sample shall be obtained and tested; this work shall be performed by the City/VDOT. The testing of the sample shall be performed in duplicate by the laboratory without knowledge of the specific project conditions such as the identity of the Contractor, the test results of the City/VDOT and Contractor or the specification targets. The results of these tests shall be binding on both the Contractor and the City. The Contractor or its representative may witness the testing if requested. Costs incurred for referee testing shall be paid by the party found in error.

The City may elect to accept small quantities of material without normal sampling and testing frequencies. The determination to accept materials using this provision rests solely with the City. Structural Concrete shall not be considered under the small quantity definition.

An item can be accepted as a small quantity if the proposed project quantity for a specific item is less than one sublot or one-half of a sublot for mainline paving.

Factors that the City shall consider prior to use of small quantity acceptance are:

i. Has the material been previously approved?
ii. Is the material certified?
iii. Is there a current mix design or reference design?
iv. Has it been recently tested with satisfactory results?
v. Is the material structurally significant?

Small quantity acceptance may be accomplished by visual, certification or other methods. Acceptance of small quantities of materials by these methods must be fully documented. Documentation of materials under these methods must be provided by the City. For visual documentation, an entry shall be noted on field records, with a statement as to the basis of

acceptance of the material and the approximate quantity involved. A separate list of items and quantities acceptance on visual inspection shall be maintained by the City.

VIII. VDOT INSPECTED AND TESTED ITEMS

The Contactor shall identify to the City any and all off-site fabricated materials from producers not in an existing VDOT QA/QC Program. The inspection of project-specific fabricated items shall be accomplished by VDOT. To facilitate these inspections, the Contractor shall promptly notify the City of the intended fabricator and provide two (2) copies of the Approved Shop Drawings. In addition, the Contractor shall submit a Source of Materials, Form C25, for all materials for which VDOT retains responsibility for testing.

See Table 2 below for a listing of materials for which VDOT retains responsibility for testing:

Table 2 – VDOT Off-Site Fabrication Inspection and Testing

Item	Point of Contact
Pre-Stressed Concrete Structural Elements (AASHTO and Bulb-T beams, girders and piles)	VDOT District Materials Section
Metal Traffic Signal and Light Poles and Arms	VDOT Central Office Materials – Structures Section
Structural Steel Elements (beams and girders)	VDOT Central Office Materials – Structures Section
Pre-Cast Concrete Structures	VDOT District Materials Section
Pipe (concrete, steel, aluminum and high density polyethylene) for culverts, storm drains and underdrains	VDOT District Materials Section
Asphalt Concrete Mixtures	VDOT District Materials Section
Hydraulic Concrete Mixtures	VDOT District Materials Section
Aggregate (dense and open-graded mixes)	VDOT District Materials Section

IX. PAYMENT

The costs of all material, labor, personnel, equipment, sampling, testing, documentation and report preparation for QC sampling and testing of material under the above Construction Quality Control Plan shall be incidental to the contract bid price of the respective material. No additional compensation shall be provided for these items.

Locality QC/QA/IA Frequency / Acceptance

Soil & Aggregate

Material Type	Spec Section	Test Reference	Contractor QC Frequency/ Acceptance Testing	QA Frequency City / VDOT	IA Frequency - VDOT
Backfill	Contract Special Provisions				
Moisture Density Relations-Standard Proctor, Atterberg Limits & Grain Size Analysis (All Backfill Types)		VTM-1, VTM-7, & VTM-25	Once bi-weekly during production and with change in material	Once every 5 weeks during production	1 test per year during production; minimally perform one (1) in first five (5) tests taken for QA
In Place Density Tests:					
Box Culverts & Pipes		VTM-10	One (1) per 200 LF length, every other lift, minimum one (1) test per 500 CY; minimum one (1) test per work shift at each location and whenever there is a change in material or compaction equipment/method	One Test per 1500 CY with a minimum 1 test every 10 days of production	One per 15,000 CY, minimally perform one (1) test in first five (5) tests taken for QA
Abutments, Retaining Walls and MSE Walls		VTM-10	One (1) per 100 LF length, each lift, minimum one (1) test per 150 CY; minimum one (1) test per work shift at each location and whenever there is a change in material or compaction equipment/method	One Test per 1500 CY with a minimum 1 test every 10 days of production	One per 15,000 CY, minimally perform one (1) test in first five (5) tests taken for QA
SOILS/EMBANKMENT					
Moisture Density Relations-Standard Proctor, Atterberg Limits & Grain Size Analysis (Soils/Embankment)		VTM-1, VTM-7, & VTM-25	Once weekly during production and with change in material (Proctor for backfill will suffice if same source)	Once every 5 weeks during production	1 test per year during production; minimally perform one (1) in first five (5) tests taken for QA
Embankment in Place Density (Soils/Embankment)		VTM-10	One (1) per 500 LF interval each lift; minimum one (1) test per 500 CY; minimum one (1) test per work shift at each location and whenever there is a change in material or compaction equipment/method	One test per 5000 CY with a minimum 1 test every 10 days of production	One test per 1000 CY, or fraction thereof, with minimum of one test per project.
Subgrade -Nuclear Gauge	Sec. 305	VTM-10	One (1) test per 750 SY	One (1) test per 7,500 SY	One (1) test per 75,000 SY, minimally perform one (1) in first five (5) tests taken for QA

Locality QC/QA/IA Frequency / Acceptance

Soil & Aggregate

Material Type	Spec Section	Test Reference	Contractor QC Frequency/ Acceptance Testing	QA Frequency City / VDOT	IA Frequency - VDOT
Treated Subgrade/Subbase, Aggregate Base Material, and Cement Treated Aggregate Base Material	VDOT Sections 306, 307, & 309				
Depth Checks		VTM-38B	One test per every half mile per lane width	One test for every five miles per lane width.	One test per 4 roadway miles, or fraction thereof. Minimum of one per project, unless quantity of individual material (Base, sub-base, etc.) is less than 500 tons per project, in which case no IA test required for that material
In Place Density		VTM-10	One test per every half mile of stabilization per lane width; average of 5 readings for each nuclear test	One test for every five miles per lane width.	One test per 4 roadway miles, or fraction thereof, consisting of the average of 5 readings. Minimum of 5 readings per project, unless total quantity of individual material(Base, sub-base, etc.) is less than 500 tons per project, in which case no IA test required for that material.
Clearing and Grubbing	VDOT Section 301 & Table 105-5				
Ensure activities are confined to limits and seeded within 30 days of disturbance		N/A	Weekly during this activity	Weekly	
Erosion and Siltation Control	VDOT Section 303.03 & Current Virginia DCR Specifications & Table 105-5				
Monitor for correct installation and Maintenance		N/A	Weekly or after significant rain event.	Bi-weekly or after significant rain event.	

Locality QC/QA/IA Frequency / Acceptance

Hydraulic Cement Concrete

Material Type	Spec Section	Test Reference	Contractor QC Frequency/ Acceptance Testing	QA Frequency City / VDOT	IA Frequency - VDOT
Cast-In-Place Structures and Bridge Concrete	VDOT Section 217				
Concrete Entrained Air Content (CIP Concrete)		ASTM C231 or C173	Test every load	1 per 100 CY	One test shall be made on the same batches of concrete from which cylinders taken
Slump of Hydraulic Cement Concrete (CIP Concrete)		ASTM 143	Test every load/batch	1 per 100 CY	One test shall be made on the same batches of concrete from which cylinders taken
Temperature of Concrete (CIP Concrete)		ASTM C1064	Test every load	1 per 100 CY	One per 500 CY, minimally one (1) in first five (5) tests taken for QA
Concrete Unit Weight		ASTM C138	Test one per day of production one every 100 CY	1 per 1000 CY	One per 500 CY, minimally one (1) in first five (5) tests taken for QA
Compressive Strength of Concrete Cylinders (CIP Concrete) (Separate Deck, Superstructure tests)		ASTM C31 & C39	One (1) set of three (3) cylinders per every 100 CY and at least one set per day	One (1) set of three (3) cylinders per every 1000 CY	Minimum one set per 1000 cubic yards of structural concrete, except that IAS will not be required for projects having less than 300 cubic yards. If more than one set is needed per project, the samples should be taken from different classes. One set of 3 cylinders from the same batch as acceptance samples. At job site. All cylinders to be tested at 28 days.
Chloride Permeability Concrete Cylinders (CIP Concrete)		VTM-112	One (1) set of two (2) cylinders per every 100 CY and at least one set per day	One (1) set of two (2) cylinders per every 1000 CY	Minimum one set per 1000 cubic yards of structural concrete, except that IAS will not be required for projects having less than 300 cubic yards. If more than one set is needed per project, the samples should be taken from different classes. One set of 3 cylinders from the same batch as acceptance samples. At job site. All cylinders to be tested at 28 days.
Concrete Reinforcing Steel (CIP Concrete) elongation, yield strength and ultimate strength		ASTM A615	Verify manufacturers certificates for every shipment for acceptance prior to placement	1 sample per manufacturer per most common size per structure	1 sample per project

Locality QC/QA/IA Frequency / Acceptance

Hydraulic Cement Concrete

Material Type	Spec Section	Test Reference	Contractor QC Frequency/ Acceptance Testing	QC / QA Frequency City / VDOT	IA Frequency VDOT
Miscellaneous Concrete	VDOT Section 217				
Concrete Entrained Air Content (Miscellaneous Concrete)		ASTM C231 & C173	1 test per 100 CY with a min. 1 test per day and when cylinders are cast.	1 test per 1,000 CY with a min. 1 test every 10 days of production	One per 10,000 CY, minimally one (1) in first five (5) tests taken for QA
Slump of Hydraulic Cement Concrete (Miscellaneous Concrete)		ASTM C143	1 test per 100 CY with a min. 1 test per day and when cylinders are cast.	1 test per 1,000 CY with a min. 1 test every 10 days of production	One per 10,000 CY, minimally one (1) in first five (5) tests taken for QA
Temperature of Concrete (Miscellaneous Concrete)		ASTM C1064	1 test per 100 CY with a min. 1 test per day and when cylinders are cast.	1 test per 1,000 CY with a min. 1 test every 10 days of production	One per 10,000 CY, minimally one (1) in first five (5) tests taken for QA
Concrete Unit Weight		ASTM C138	1 test per 100 CY with a min. 1 test per day and when cylinders are cast.	1 test per 1,000 CY with a min. 1 test every 10 days of production	One per 10,000 CY, minimally one (1) in first five (5) tests taken for QA
Compressive Strength of Concrete Cylinders (Miscellaneous Concrete)		ASTM C31 & C 39	One (1) set of three (3) cylinders per every 250 CY and at least one set per day	One (1) set of three (3) cylinders per every 2500 CY (cumulative)	One (1) set of three (3) cylinders per every 25,000 CY (cumulative)
Concrete Reinforcing Steel (Miscellaneous Concrete)		ASTM A615	Verify manufacturers certificates for every shipment for acceptance prior to placement	1 sample per manufacture per most common size per structure	One (1) sample per project
Concrete Curing Materials	VDOT Section 220				
All types		See LAP Manual	Verification of LM and lot numbers from QA Supplier Approved List		

Locality QC/QA/IA Frequency / Acceptance					
Asphalt Concrete Pavement					
Material Type	**Spec Section**	**Test Reference**	**Contractor QC Frequency/ Acceptance Testing**	**QA Frequency City / VDOT**	**IA Frequency -VDOT**
Asphalt Concrete Pavement	VDOT Section 315				
By Nuclear Method In Place Pavement Density (for all asphalt except stone matrix asphalt)		VTM-76, VTM-6	Establish Roller pattern, control strips and test sections, 10 stratified random density test sites per test section (5,000 ft.)	QA=20%*QC Lots 1) e.g. 25000 ft. (7500 m) per lane width. Ten (10) stratified random samples per QA lot. Limits of QA lot should match limits of one QC lot.	IA=10%*QC Readings Observe and witness QC testing to assure gauge is calibrated and accurate. Observe and verify test sites are random and match selected sites. Verify that QC tests are done using proper procedures.
In Place Pavement Density by cores (for all asphalt except Stone Matrix Aphalt (SMA))		VTM-006; VTM-32	**Density** - min. 1 core per location not long enough to establish roller pattern/control strip	Density - One (1) random core per 10 QC locations	One test per 2 roadway miles, or fraction thereof. Minimum of one per project, unless combined total quantity of all asphalt concrete material is less than 500 tons per project, in which case no IA test required.
Depth Checks		VTM-32	One (1) per per 1/4 mile per lane width minimum one (1) test per roadway, maximum lot size 1 mile (4 tests)	One test per every 2.5 miles per lane width, minimum one (1) test per roadway	Future version: One test for every fifty (50) miles per lane width, minimum one test per roadway
Permanent Pavement Marking	VDOT Section 512				
Permanent Pavement Marking - Preformed Tape		VTM-94	Daily at start up with periodic checks every three hours of operation	Randomly select ten (10) twenty-foot in place sections of markings per day and measure thickness and width. Observe the bead embedment, color (night and day) and brightness/reflectivity	Review two (2) C-85 reports per month during production to verify that calculated quantities match application rates and that daily measurements are performed according to VTM 94.
Permanent Pavement Marking - Liquid Materials (Paint, thermoplastic and epoxy)		VTM-94	Daily at start up with periodic checks every three hours of operation	Randomly select ten (10) twenty-foot in place sections of markings per day and measure thickness and width. Observe the bead embedment, color (night and day) and brightness/reflectivity	Review two (2) C-85 reports per month during production to verify that calculated quantities match application rates and that daily measurements are performed according to VTM 94.

Locality QC/QA/IA Frequency / Acceptance					
Miscellaneous Roadway and Structure					
Material Type	**Spec Section**	**Test Reference**	**Contractor QC Frequency/ Acceptance Testing**	**QC / QA Frequency City / VDOT**	**IA Frequency VDOT**
Pre-cast Structures	VDOT Section 404 & Table 105-5				
Verify bedding material is installed properly and that pre-cast materials are not chipped or cracked		N/A		Daily	
Underdrains	VDOT Section 501 & Table 105-5				
Inspect to ensure no deficiencies		VTM 108	All accessible outlet locations; Additionally a minimum of 10% of longitudinal sections	Observe 10% of outlet locations; Additionally a minimum of 1% of longitudinal sections	
Guardrail	VDOT Section 505 & Table 105-5				
Verify that guardrail is installed per specifications and at proper height		N/A	Daily	Spot-check every 50lf for proper height	
Fencing	VDOT Section 507 & Table 105-5				
Verify fencing type, height and location		N/A	Daily	Weekly	
Maintenance of Traffic	VDOT Section 512 & Table 105-5				
Monitor installation and maintenance and use Work Zone Safety Checklist		N/A	Daily	Weekly	
Topsoil and Seeding	VDOT Section 602/603 & Table 105-5				
Verify proper material is utilized at application rates from plans		N/A	Daily	Weekly	
Traffic Signs	VDOT Section 512 & Table 105-5				
Verify that signs meeting current standards are utilized in locations per plans		N/A	Daily	Weekly	
Traffic Signals	VDOT Section 703 & Table 105-5				
Monitor installation for conformance with plans and specifications		N/A	Daily	Weekly	

Locality QC/QA/IA Frequency / Acceptance					
Miscellaneous Roadway and Structure					
Material Type	**Spec Section**	**Test Reference**	**Contractor QC Frequency/ Acceptance Testing**	**QC / QA Frequency City / VDOT**	**IA Frequency VDOT**
Water and Sewer Facilities	VDOT Section 520 & Table 105-5				
Monitor installation for conformance with plans and specifications		N/A	Daily	Weekly	

SPECIAL PROVISION
QUEUE DETECTION SYSTEM

The Queue Detection System shall include all items noted in the plans. The Queue Detection System shall detect a vehicle(s) stopped in the detection zone for 10 seconds or more. Upon detection, the system shall immediately preempt the master controller operations to begin minimum clearance phase time and change the Ramp D-1 phase to green. Simultaneously, the Queue Detection System shall actuate the flashing beacons on the advance warning sign located on the Expressway.

Upon clearance of all vehicles within 50 feet of the stop bar on Ramp D-1, the system will automatically deactivate the flashing beacons and allow the controller to resume normal coordinated operations.

The Contractor will field test the operation of the system and confirm proper operations in the presence of the City's representative and the manufacturer's representative prior to putting the system into service. This will include use of test vehicles provided by the Contractor, if deemed necessary by the City. Contractor shall also perform additional, similar tests, if requested by the City, until final acceptance of the project.

All labor, equipment, vehicles and incidentals to perform work required by this Special Provision shall be included in the lump sum price bid for the Queue Detection System. No separate payment will be considered for any associated services.