SUPERVISED BY CITY OF LYNCHBURG
PROJECT MANAGER STEVE CAMPBELL, MATTERN & CRAIG (540)-345-9342
SURVEYED BY MATTERN & CRAIG (540)-345-9342
DESIGNED BY MIKE AGEE, MATTERN & CRAIG

REVISION DATA SHEET

REVISED	STATE	STATE ROUTE	STATE PROJECT	SHEET NO.
	VA.	29	U000-118-204, C-501	IC

State Project:
Federal Project:
From: 235' SOUTH OF 16TH STREET
To: 0.10 MILE SOUTH OF LYNCHBURG EXPRESSWAY (RT.29) AT RAILROAD OVERPASS

DESIGN FEATURES RELATING TO CONSTRUCTION OR TO REGULATION AND CONTROL OF TRAFFIC MAY BE SUBJECT TO CHANGE AS DEEMED NECESSARY BY THE DEPARTMENT

12-18-13, ADDENDUM # 2, PROJECT: U000-118-204, C-501:

SHEET 2: REVISED TYPICAL SECTION.

SHEET 2A: REVISED RAMP B-1 TYPICAL SECTION.

SHEET 2F(13): ADDED SHEET 2F(13).

SHEET 3: REVISED CLAY PAVER AND CONCRETE PAVER NOTES. ADDED SIDEWALK AND CLAY PAVERS ON THE RIGHT SIDE OF RAMP B.

REVISIONS MADE PER REQUEST BY THE CITY OF LYNCHBURG, VIRGINIA ON DECEMBER 24, 2013.

PROJECT	SHEET NO.
U000-118-204	IC

SUPERVISED BY CITY OF LYCHBURG
PROJECT MANAGER STEVE CAMPBELL, MATTERN & CRAIG (540)-345-9342
SURVEYED BY MATTERN & CRAIG (540)-345-9342
DESIGNED BY MIKE AGEE, MATTERN & CRAIG

TYPICAL SECTIONS

NO SCALE

DESIGN FEATURES RELATING TO CONSTRUCTION OR TO REGULATION AND CONTROL OF TRAFFIC MAY BE SUBJECT TO CHANGE AS DEEMED NECESSARY BY THE DEPARTMENT

REVISED	STATE	FEDERAL AID PROJECT	STATE ROUTE	STATE PROJECT	SHEET NO.
12-11-13	VA.		29	U000-118-204, C-501	2A

COMMONWEALTH OF VIRGINIA
MICHAEL S. AGEE
Lic. No. 015232
PROFESSIONAL ENGINEER

MATTERN & CRAIG, INC
Roanoke, Virginia
(ROADWAY ENGINEER)

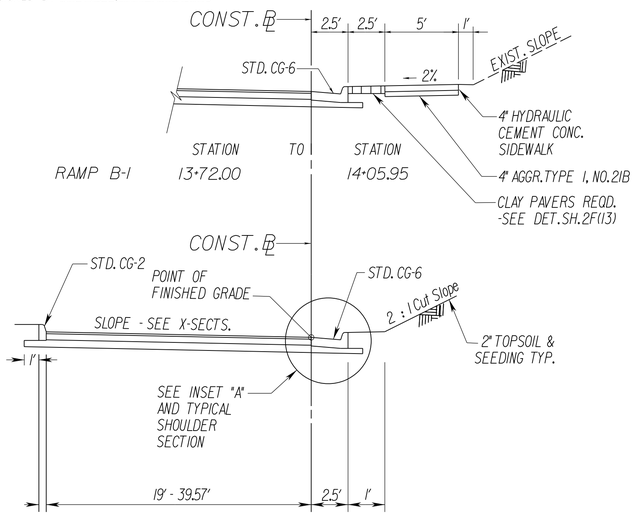

	STATION	TO	STATION
RAMP B-1	13+72.00		14+05.95
RAMP B-1	11+36.23		13+72.00

INSET "A"

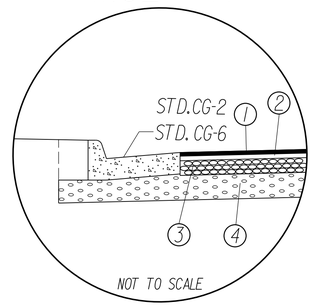

1. ASPHALT CONCRETE SURFACE COURSE TYPE SM-9.5D @ 180LBS/SY.
2. ASPHALT CONSRETE INTERMEDIATE COURSE IM-19.0D @ 220LBS/SY.
3. 6" ASPHALT CONCRETE BASE COURSE TYPE BM-25.0 @ 678 LBS/SY
4. 10" AGGREGATE BASE MATERIAL TYPE I NO. 21B

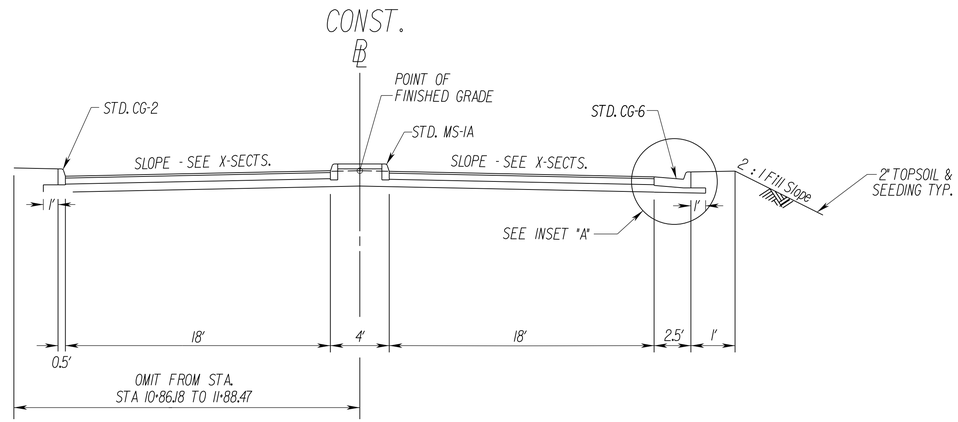

	STATION	TO	STATION	REMARKS
RAMP B-2	10+27.80		11+88.47	

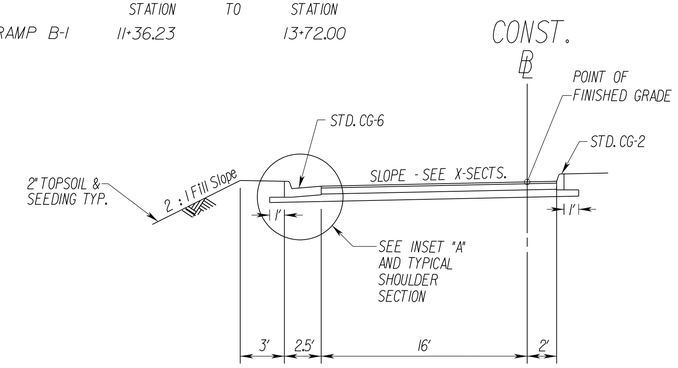

	STATION	TO	STATION
RAMP C-1	10+26.00		11+00.00

INSET "B"

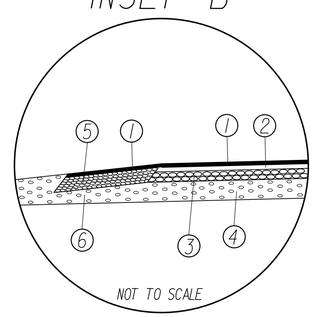

1. ASPHALT CONCRETE SURFACE COURSE TYPE SM-9.5D @ 180LBS/SY.
2. ASPHALT CONSRETE INTERMEDIATE COURSE IM-19.0D @ 220LBS/SY.
3. 6" ASPHALT CONCRETE BASE COURSE TYPE BM-25.0 @ 678 LBS/SY
4. 10" AGGREGATE BASE MATERIAL TYPE I NO. 21B
5. 8" ASPHALT CONCRETE BASE COURSE TYPE BM-25.0 @ 904 LBS/SY
6. VAR. DEPTH AGGREGATE BASE MATERIAL TYPE I NO. 21B.

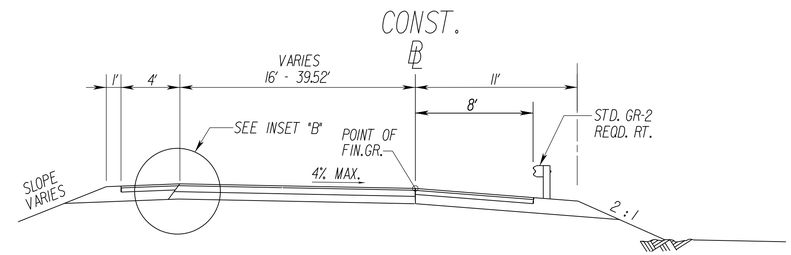

	STATION	TO	STATION
RAMP C-2	13+63.84		14+87.83

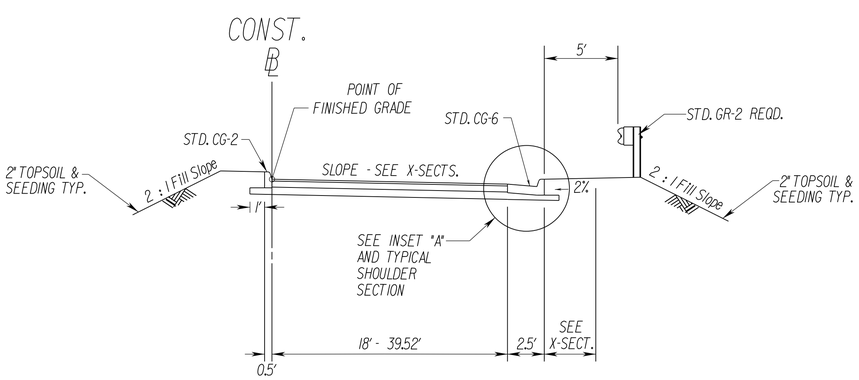

	STATION	TO	STATION
RAMP C-2	12+77.35		13+63.84

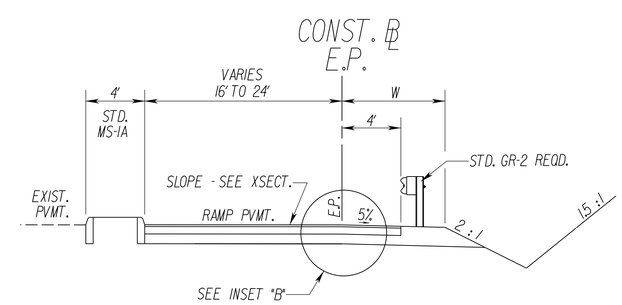

	STATION	TO	STATION	REMARKS
RAMP B-1	10+00.00 RT.		10+75.00 RT.	W=7' W/4' PAVED SHLD., GUARDRAIL REQD.
RAMP B-1	10+75.00 RT.		11+36.23 RT.	W=4' PAVED SHLD. ONLY, GUARDRAIL NOT REQD.

PLAN NO.	PROJECT	FILE NO.	SHEET NO.
	U000-118-204		2A

SUPERVISED BY CITY OF LYCHBURG
PROJECT MANAGER STEVE CAMPBELL, MATTERN & CRAIG (540)-345-9342
SURVEYED BY MATTERN & CRAIG (540)-345-9342
DESIGNED BY MIKE AGEE, MATTERN & CRAIG

TYPICAL DITCH SECTIONS

NO SCALE

DESIGN FEATURES RELATING TO CONSTRUCTION OR TO REGULATION AND CONTROL OF TRAFFIC

REVISED	STATE	FEDERAL AID PROJECT	STATE ROUTE	STATE PROJECT	SHEET NO.
12-11-13	VA.		29	U000-118-204, C-501	2F(13)

COMMONWEALTH OF VIRGINIA
MICHAEL S. AGEE
Lic. No. 015232
PROFESSIONAL ENGINEER

MATTERN & CRAIG, INC
Roanoke, Virginia
(ROADWAY ENGINEER)

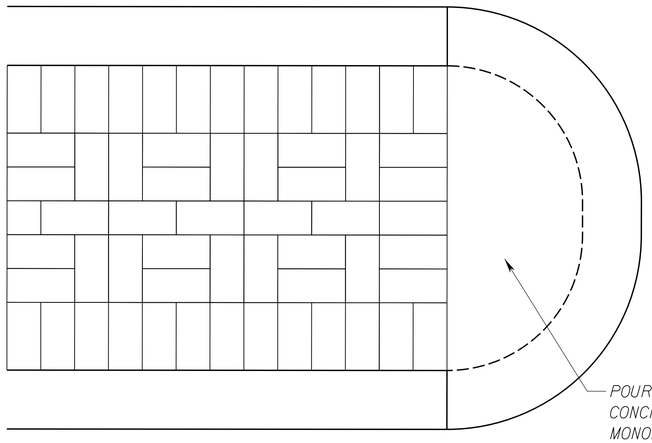

POUR CG-2 AND CONCRETE INFILL MONOLITHICALLY. CONC. SLAB SHALL BE 4" MIN. ON COMPACTED SUBGRADE.

PATTERN TERMINATION PLAN

NO SCALE

(SEE RAISED MEDIAN SECTION)

NOTE: CENTER OF MEDIAN TO HAVE 2" CROWN FROM TOP OF CURB.

CONC. PAVERS SHALL MATCH TYPE, SIZE, COLOR AND BRAND AS USED ON THE ADJACENT SECTIONS OF THE MIDTOWN CONNECTOR PROJECT.

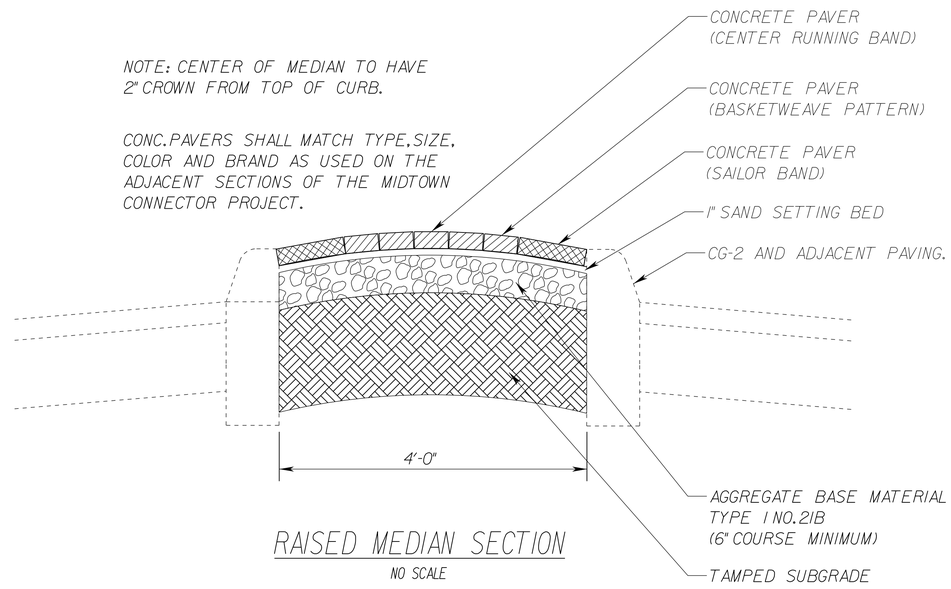

RAISED MEDIAN SECTION

NO SCALE

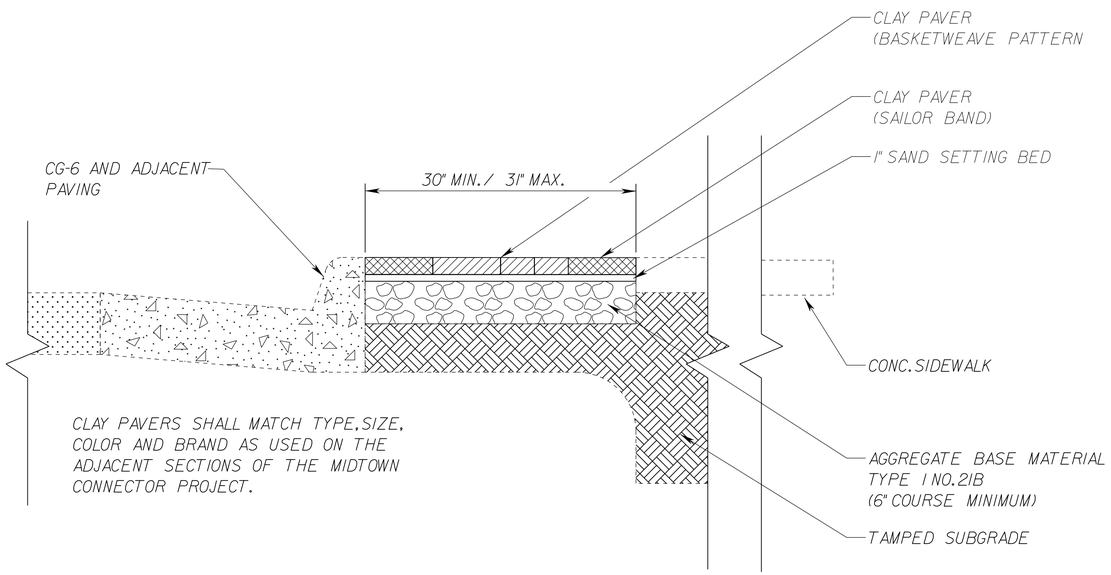

CLAY PAVERS SHALL MATCH TYPE, SIZE, COLOR AND BRAND AS USED ON THE ADJACENT SECTIONS OF THE MIDTOWN CONNECTOR PROJECT.

SIDE WALK TO CURB - 30" BRICK BANDING SECTION

NO SCALE

GENERAL SHEET NOTES:

1. ALL REFERENCES TO CLAY PAVERS REFER TO THE SPECIAL PROVISIONS IN THE PROJECT MANUAL SPECIFICATIONS.
2. ALL REFERENCES TO CONCRETE PAVERS REFER TO THE SPECIAL PROVISIONS IN THE PROJECT MANUAL SPECIFICATIONS.
3. ALL CONCRETE AND CLAY PAVERS SHALL MATCH TYPE, SIZE, COLOR AND BRAND AS USED ON THE ADJACENT SECTIONS OF THE MIDTOWN CONNECTOR PROJECT. COODINATE WITH THE CITY OF LYNCHBURG.

PLAN NO.	PROJECT	FILE NO.	SHEET NO.
	U000-118-204		2F(13)

SUPERVISED BY CITY OF LYNCHBURG
PROJECT MANAGER STEVE CAMPBELL, MATTERN & CRAIG (540)-345-9342
SURVEYED BY MATTERN & CRAIG (540)-345-9342
DESIGNED BY MIKE AGEE, MATTERN & CRAIG

TYPICAL SECTIONS

NO SCALE

DESIGN FEATURES RELATING TO CONSTRUCTION OR TO REGULATION AND CONTROL OF TRAFFIC MAY BE SUBJECT TO CHANGE AS DEEMED NECESSARY BY THE DEPARTMENT

REVISED	STATE	FEDERAL AID PROJECT	STATE ROUTE	STATE PROJECT	SHEET NO.
12-11-13	VA.		29	U000-118-204, C-501	2

COMMONWEALTH OF VIRGINIA
MICHAEL S. AGEE
Lic. No. 015232
PROFESSIONAL ENGINEER

MATTERN & CRAIG, INC
Roanoke, Virginia
(ROADWAY ENGINEER)

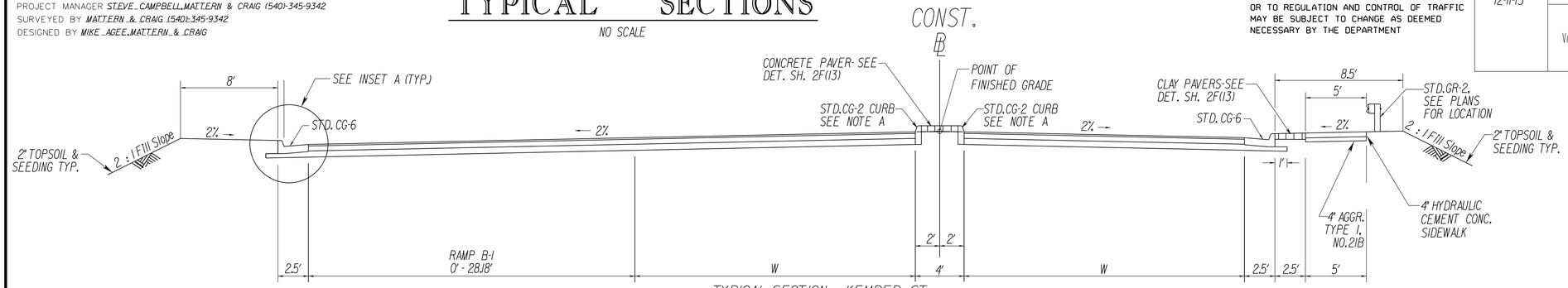

TYPICAL SECTION - KEMPER ST.

STATION	TO	STATION	REMARKS
12+82.03 RT.		14+17.44 RT.	W = 23'
14+17.44 RT.		14+68.77 RT.	W VARIES 23' TO 21.67'
14+68.77 RT.		14+91.94 RT.	W = 21.67'
13+59.00 LT.		15+03.50 LT.	W VARIES - SEE PLAN

NOTE A: CONCRETE PAVERS REQ'D. IN MEDIAN FROM STA. 12+82.03 TO STA. 14+91.94
CLAY PAVERS REQ'D. IN UTILITY STRIP RIGHT FROM STA. 12+82.03 TO STA. 14+91.94

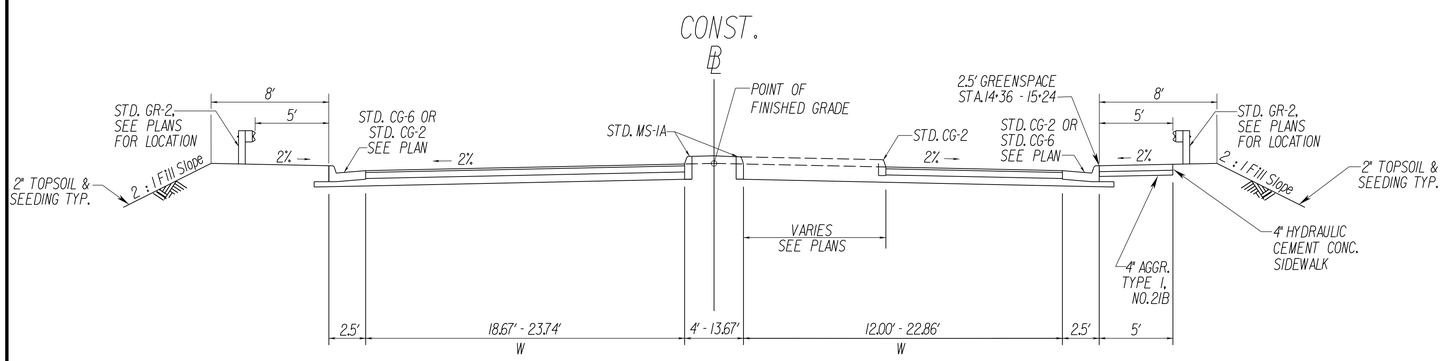

TYPICAL SECTION - KEMPER ST.

STATION	TO	STATION	REMARKS
14+91.94 RT.		16+39.98 RT.	W VARIES - SEE PLAN
15+03.50 LT.		16+08.00 LT.	W VARIES - SEE PLAN
16+08.00 LT.		16+39.00 LT.	W = 21.67'
16+39.98		18+09.66	W = 23.67' LT. & RT.
18+09.66		18+59.94	W = 23.67' LT. & RT.
18+59.94 RT.		19+48.00 RT.	W = 23.67'
19+52.25 RT.		20+33.00 RT.	W = 20.67'
18+59.94 LT.		21+07.00 LT.	W VARIES - SEE PLAN
21+07.00 LT.		22+75.00 LT.	W = 24'
18+59.94		21+07.00	LEFT SIDE OF MEDIAN WARIES FROM 2' TO 5.5', RIGHT SIDE MEDIAN IS 5' WIDE

INSET "A" (TYP.)

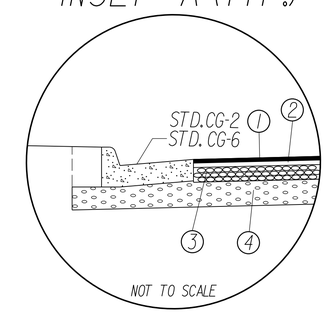

1. ASPHALT CONCRETE SURFACE COURSE TYPE SM-9.5D @ 180LBS/SY.
2. ASPHALT CONCRETE INTERMEDIATE COURSE IM-19.0D @ 220LBS/SY.
3. 6" ASPHALT CONCRETE BASE COURSE TYPE BM-25.0 @ 678 LBS/SY
4. 10" AGGREGATE BASE MATERIAL TYPE I NO.21B

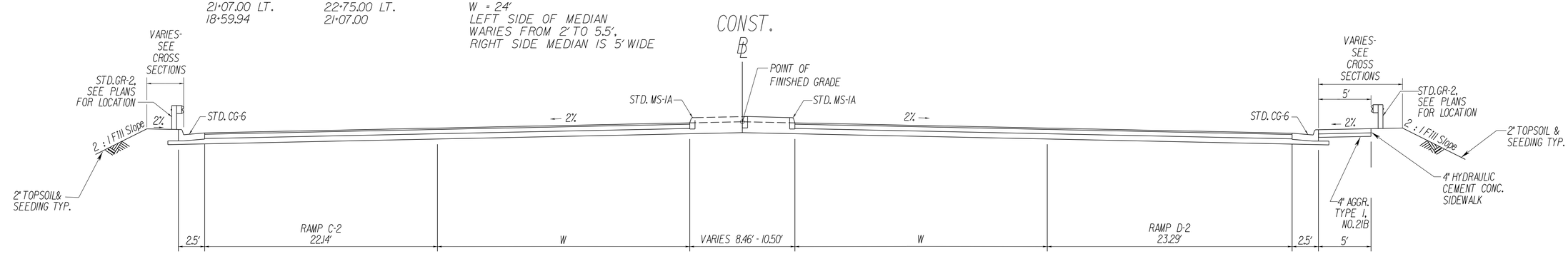

STATION	TO	STATION	REMARKS
KEMPER ST. 20+33.00 RT.		21+27.50 RT.	W VARIES - SEE PLAN
KEMPER ST. 21+27.50 RT.		22+75.00 RT.	W = 24'

PLAN NO.	PROJECT	FILE NO.	SHEET NO.
	U000-118-204		2

SUPERVISED BY CITY OF LYNCHBURG
PROJECT MANAGER STEVE CAMPBELL, MATTERN & CRAIG (540)-345-9342
SURVEYED BY MATTERN & CRAIG (540)-345-9342
DESIGNED BY MIKE AGEE, MATTERN & CRAIG

REVISED	STATE	ROUTE	PROJECT	SHEET NO.
12-11-13	VA.	29	U000-118-204, C-501	3

COMMONWEALTH OF VIRGINIA
MICHAEL S. AGEE
Lic. No. 015232
PROFESSIONAL ENGINEER

MATTERN & CRAIG, INC
Roanoke, Virginia
(ROADWAY ENGINEER)

DESIGN FEATURES RELATING TO CONSTRUCTION OR TO REGULATION AND CONTROL OF TRAFFIC MAY BE SUBJECT TO CHANGE AS DEEMED NECESSARY BY THE DEPARTMENT

UTILITY OWNERS

WATER AND SEWER:	CITY OF LYNCHBURG-DEPARTMENT OF UTILITIES 525 TAYLOR STREET LYNCHBURG, VA. 24504 CONTACT: HARRY DOSS (434) 455-4271
GAS:	COLUMBIA GAS OF VIRGINIA 1500 RUTHERFORD STREET LYNCHBURG, VA 24501 CONTACT: STEVE BISHOP (434) 238-1302
ELECTRIC:	AMERICAN ELECTRIC POWER 4001 MAYFLOWER DRIVE LYNCHBURG, VA 24502 CONTACT: FRED BRYANT (434) 546-1963
TELEPHONE/ FIBER OPTIC:	VERIZON 553 LEESVILLE ROAD LYNCHBURG, VA 24502 CONTACT: LESLIE H. SCHMITT (34) 237-9522
TELEPHONE/ FIBER OPTIC:	COMCAST CABLE 2303 NORTH AUGUSTA ST. SUITE D STAUNTON, VA 24401 CONTACT: BRIAN BEMIS (434) 996-8061
FIBER OPTIC:	LUMOS NETWORKS 828 MAIN STREET LYNCHBURG, VA 24504 CONTACT: TIM AGEE (434) 455-6284
TRAFFIC:	CITY OF LYNCHBURG- 900 CHURCH STREET LYNCHBURG, VA. 24504 CONTACT: ERIK PETZING (434) 444-3529

LEGEND

- C _ _ _ DENOTES CONSTRUCTION LIMITS IN CUTS
- F _ _ DENOTES CONSTRUCTION LIMITS IN FILLS
- 1 STD. CG-6 CURB AND GUTTER
- 2 STD. MS-1A CONC. RAISED MEDIAN STRIP
- 3 4" HYDRAULIC CEMENT CONCRETE SIDEWALK
- 4 STD. CG-2 CURB
- 5 STD. GR-2 GUARDRAIL
- DENOTES DEMOLITION OF PAVEMENT
- DENOTES PROPOSED PAVEMENT
- SIGNAL HEAD
- SIGNAL POLE

NOTE: DIMENSIONS ARE TO FACE OF CURB UNLESS OTHERWISE SHOWN OTHERWISE DIFFERENT.

NOTE 1:
EXCAVATION/EMBANKMENT IN MEDIAN ISLAND AREA TO BE INCLUDED IN THE PRICE BID FOR EARTHWORK.

DRAINAGE LEGEND

- EXISTING DRAINAGE ITEM TO BE ABANDONED.
- EXISTING DRAINAGE ITEM TO BE REMOVED.
- REMOVE EXISTING STRUCTURE.

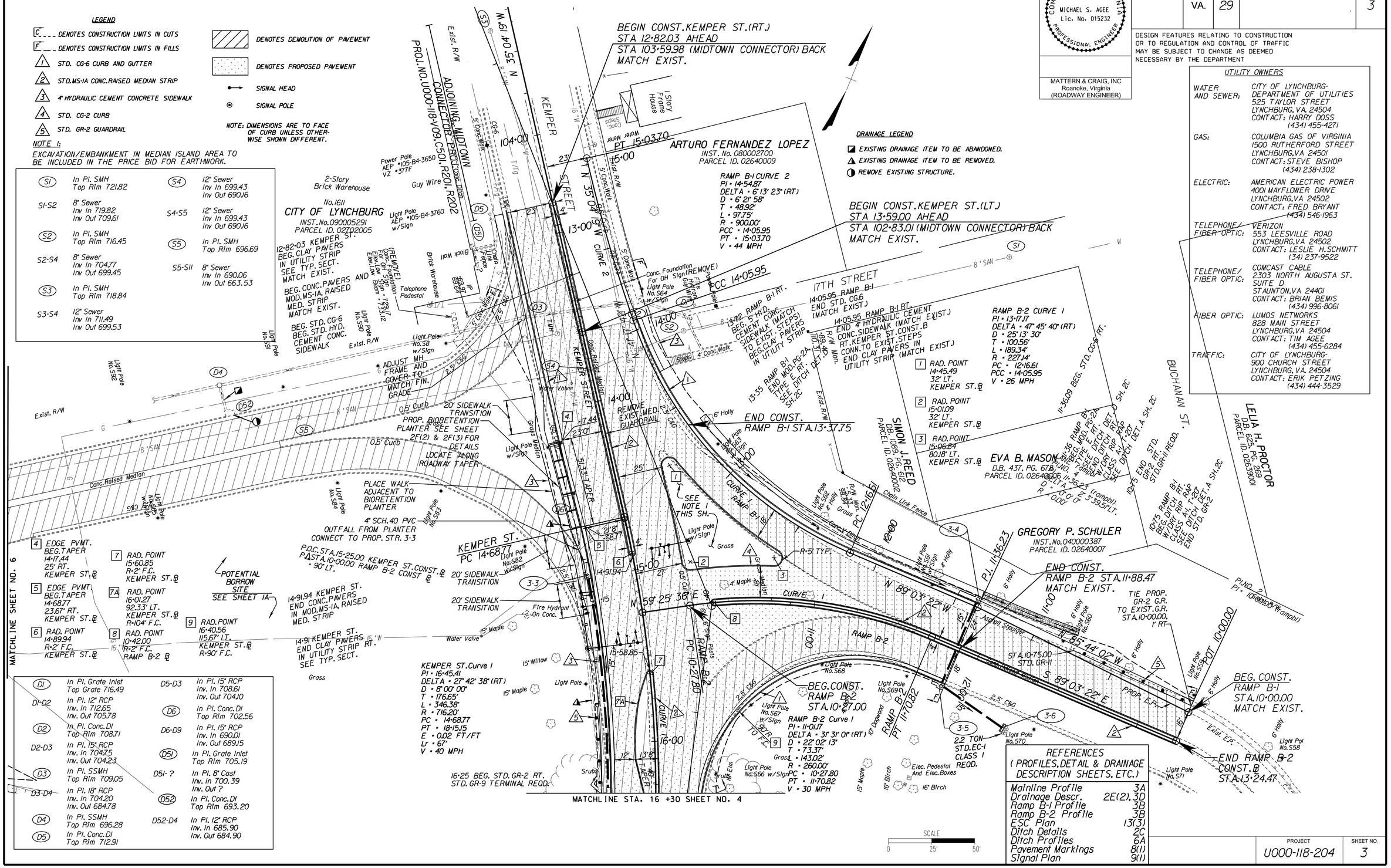

S1	In Pl. SMH Top Rim 721.82	S4	12" Sewer In In 699.43 Inv Out 690.16
S1-S2	8" Sewer In In 719.82 Inv Out 709.61	S4-S5	12" Sewer In In 699.43 Inv Out 690.16
S2	In Pl. SMH Top Rim 716.45	S5	In Pl. SMH Top Rim 696.69
S2-S4	8" Sewer In In 704.77 Inv Out 699.45	S5-S11	8" Sewer In In 690.06 Inv Out 663.53
S3	In Pl. SMH Top Rim 718.84		
S3-S4	12" Sewer In In 711.49 Inv Out 699.53		

D1	In Pl. Grate Inlet Top Grate 716.49	D5-D3	In Pl. 15" RCP Inv. In 708.61 Inv. Out 704.10
D1-D2	In Pl. 12" RCP Inv. In 712.65 Inv. Out 705.78	D6	In Pl. Conc. DI Top Rim 702.56
D2	In Pl. Conc. DI Top Rim 708.71	D6-D9	In Pl. 15" RCP Inv. In 690.01 Inv. Out 689.15
D2-D3	In Pl. 15" RCP Inv. In 704.75 Inv. Out 704.23	D51	In Pl. Grate Inlet Top Rim 705.19
D3	In Pl. SSMH Top Rim 709.05	D51-?	In Pl. 8" Cast Inv. In 700.39 Inv. Out ?
D3-D4	In Pl. 18" RCP Inv. In 704.20 Inv. Out 684.78	D52	In Pl. Conc. DI Top Rim 693.20
D4	In Pl. SSMH Top Rim 696.28	D52-D4	In Pl. 12" RCP Inv. In 685.90 Inv. Out 684.90
D5	In Pl. Conc. DI Top Rim 712.91		

REFERENCES (PROFILES, DETAIL & DRAINAGE DESCRIPTION SHEETS, ETC.)

Mainline Profile	3A
Drainage Descr.	2E(2), 3D
Ramp B-1 Profile	3B
Ramp B-2 Profile	3B
ESC Plan	13(3)
Ditch Details	2C
Ditch Profiles	6A
Pavement Markings	8(1)
Signal Plan	9(1)

PROJECT	SHEET NO.
U000-118-204	3