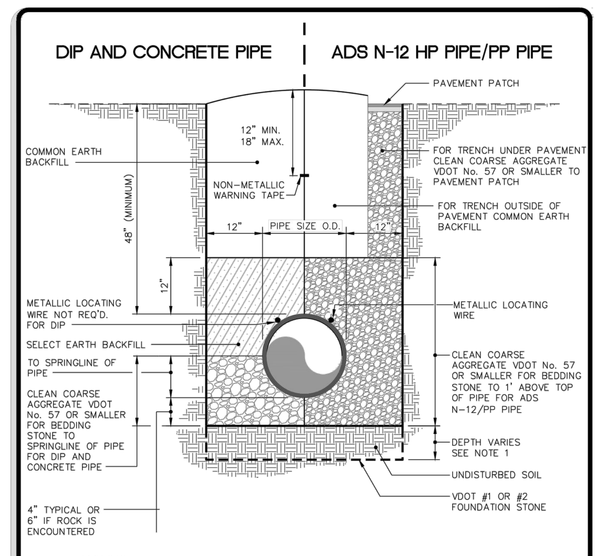

NOTES:
1. FOUNDATION STONE SHALL BE REQUIRED WHEN SOIL CONDITIONS ARE UNSUITABLE.
2. EXTRA DEPTH EXCAVATION SHALL BE PAID FOR AS ANYTHING BEYOND 4' OF COVER TO TOP OF PIPE.
3. AN ADDITIONAL 1 INCH DEPTH OF BEDDING MATERIAL WILL BE REQUIRED FOR EACH ADDITIONAL 2 FEET OF TRENCH DEPTH IN EXCESS OF 16 FEET UP TO A MAXIMUM OF 12 INCHES.
4. NON-METALLIC WARNING TAPE AND METALLIC LOCATING WIRE NOT REQUIRED FOR CULVERTS UNDER ROAD.

THE CITY OF LYNCHBURG
STORM SEWER LINE TRENCH DETAIL
SCALE: NOT TO SCALE | DETAIL # 27.01A | REVISION DATE: 12-14-2013 | SHEET # 1 OF 1
USE WITH THE CITY OF LYNCHBURG STANDARD SPECIFICATIONS ONLY

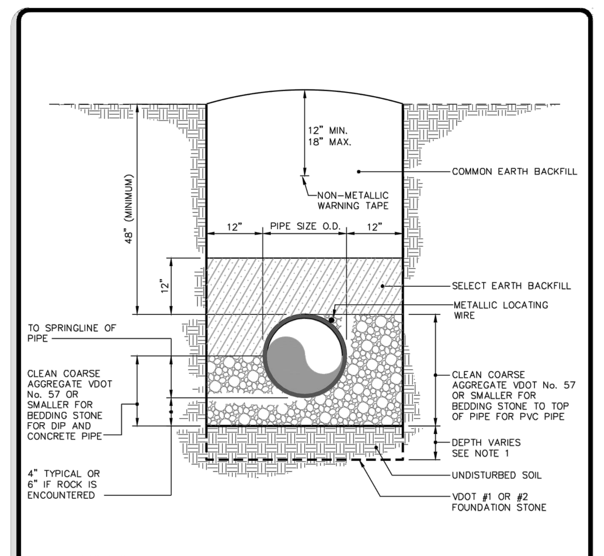

NOTES:
1. FOUNDATION STONE SHALL BE REQUIRED WHEN SOIL CONDITIONS ARE UNSUITABLE.
2. EXTRA DEPTH EXCAVATION SHALL BE PAID FOR AS ANYTHING BEYOND 4' OF COVER TO TOP OF PIPE.
3. AN ADDITIONAL 1 INCH DEPTH OF BEDDING MATERIAL WILL BE REQUIRED FOR EACH ADDITIONAL 2 FEET OF TRENCH DEPTH IN EXCESS OF 16 FEET UP TO A MAXIMUM OF 12 INCHES.

THE CITY OF LYNCHBURG
SANITARY SEWER LINE TRENCH DETAIL
SCALE: NOT TO SCALE | DETAIL # 27.01 | REVISION DATE: 12-12-2014 | SHEET # 1 OF 1
USE WITH THE CITY OF LYNCHBURG STANDARD SPECIFICATIONS ONLY

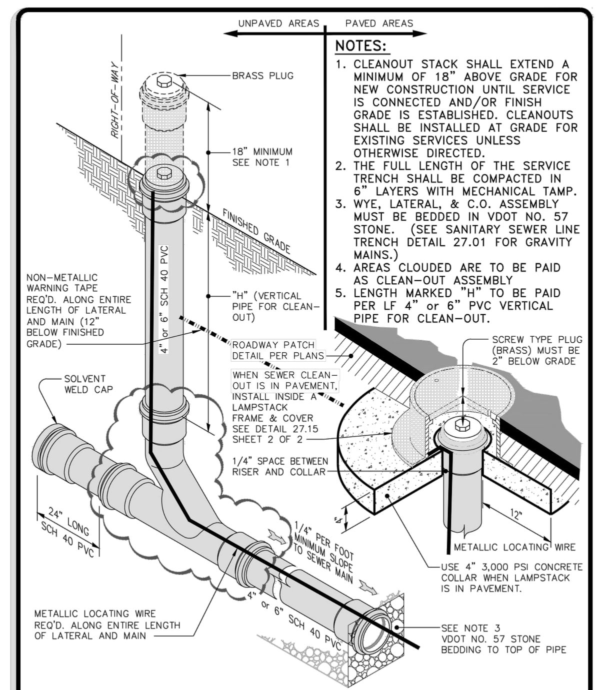

NOTES:
1. CLEANOUT STACK SHALL EXTEND A MINIMUM OF 18" ABOVE GRADE FOR NEW CONSTRUCTION UNTIL SERVICE IS CONNECTED AND/OR FINISH GRADE IS ESTABLISHED. CLEANOUTS SHALL BE INSTALLED AT GRADE FOR EXISTING SERVICES UNLESS OTHERWISE DIRECTED.
2. THE FULL LENGTH OF THE SERVICE TRENCH SHALL BE COMPACTED IN 6" LAYERS WITH MECHANICAL TAMP.
3. WYE, LATERAL, & C.O. ASSEMBLY MUST BE BEDDED IN VDOT NO. 57 STONE. (SEE SANITARY SEWER LINE TRENCH DETAIL 27.01 FOR GRAVITY MAINS.)
4. AREAS CLOUDED ARE TO BE PAID AS CLEAN-OUT ASSEMBLY
5. LENGTH MARKED "H" TO BE PAID PER LF 4" or 6" PVC VERTICAL PIPE FOR CLEAN-OUT.

THE CITY OF LYNCHBURG
TYPICAL PVC SEWER LATERAL CLEANOUT WITH IN-LINE WYE
SCALE: NOT TO SCALE | DETAIL # 27.15 | REVISION DATE: 12-14-2013 | SHEET # 1 OF 2
USE WITH THE CITY OF LYNCHBURG STANDARD SPECIFICATIONS ONLY

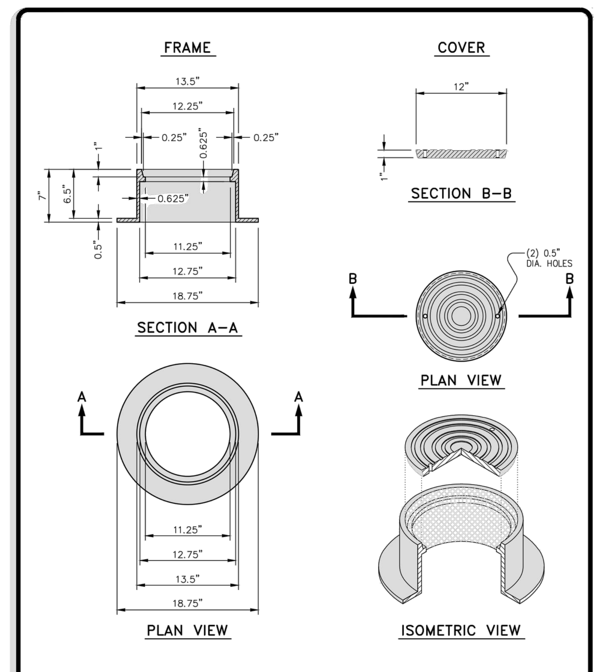

LAMPSTACK FRAME and COVER

THE CITY OF LYNCHBURG
TYPICAL PVC SEWER LATERAL CLEANOUT WITH IN-LINE WYE
SCALE: NOT TO SCALE | DETAIL # 27.15 | REVISION DATE: 12-14-2013 | SHEET # 2 OF 2
USE WITH THE CITY OF LYNCHBURG STANDARD SPECIFICATIONS ONLY

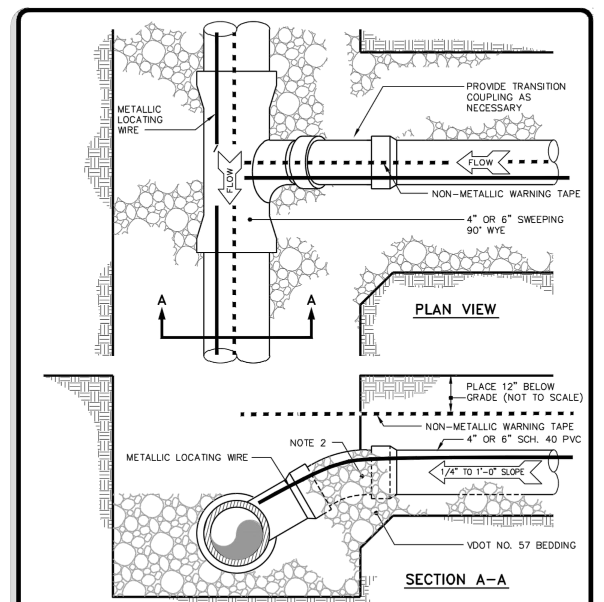

NOTES:
1. STONE SHALL BE INSTALLED TO TOP OF PIPE FOR PVC PIPE. STONE SHALL BE INSTALLED TO D/8 FOR DI PIPE.
2. NON-METALLIC WARNING TAPE AND METALLIC LOCATING WIRE REQ'D. ALONG ENTIRE LENGTH OF LATERAL AND MAIN PER SPECIFICATION 02220, PARAGRAPH 3.9.1A.

THE CITY OF LYNCHBURG
BUILDING CONNECTION HORIZONTAL WYE
SCALE: NOT TO SCALE | DETAIL # 27.14 | REVISION DATE: 12-12-2014 | SHEET # 1 OF 1
USE WITH THE CITY OF LYNCHBURG STANDARD SPECIFICATIONS ONLY

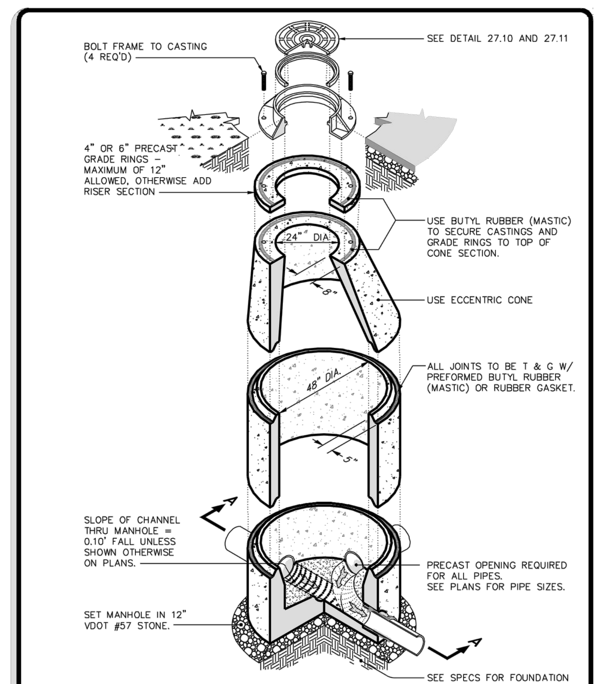

THE CITY OF LYNCHBURG
PRECAST CONCRETE 4' DIAMETER MANHOLE
SCALE: NOT TO SCALE | DETAIL # 27.02 | REVISION DATE: 12-12-2014 | SHEET # 1 OF 2
USE WITH THE CITY OF LYNCHBURG STANDARD SPECIFICATIONS ONLY

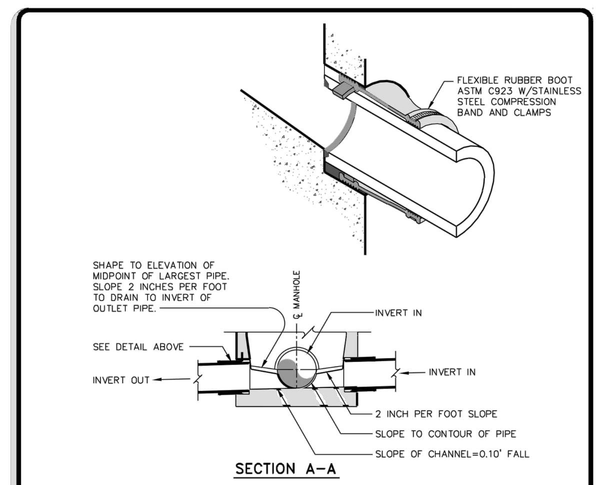

NOTES: ⚠
1. MAXIMUM DEPTH 4' DIAMETER MANHOLE = 20' (SEE SEWER DESIGN SECTION FOR OTHER REQUIREMENTS / LIMITATIONS).
2. THE INVERT SHAPING AS SHOWN SHALL CONSIST OF 3,000 PSI CONCRETE TROWELLED TO A SMOOTH SURFACE WITH NO AGGREGATE EXPOSED.
3. DETAILS OF INVERT SHAPING AS SHOWN HEREON ARE FOR EXAMPLE PURPOSES ONLY. EACH MANHOLE IS TO BE SHAPED INDIVIDUALLY TO BEST FIT THE PARTICULAR INLET AND OUTLET CONFIGURATION AND FLOW LINES.
4. WHEN DIFFERENT DIAMETER PIPES ARE USED FROM INVERT IN TO INVERT OUT, PROVIDE A SMOOTH TRANSITION THROUGH THE INVERT.

THE CITY OF LYNCHBURG
PRECAST CONCRETE 4' DIAMETER MANHOLE
SCALE: NOT TO SCALE | DETAIL # 27.02 | REVISION DATE: 12-12-2014 | SHEET # 2 OF 2
USE WITH THE CITY OF LYNCHBURG STANDARD SPECIFICATIONS ONLY

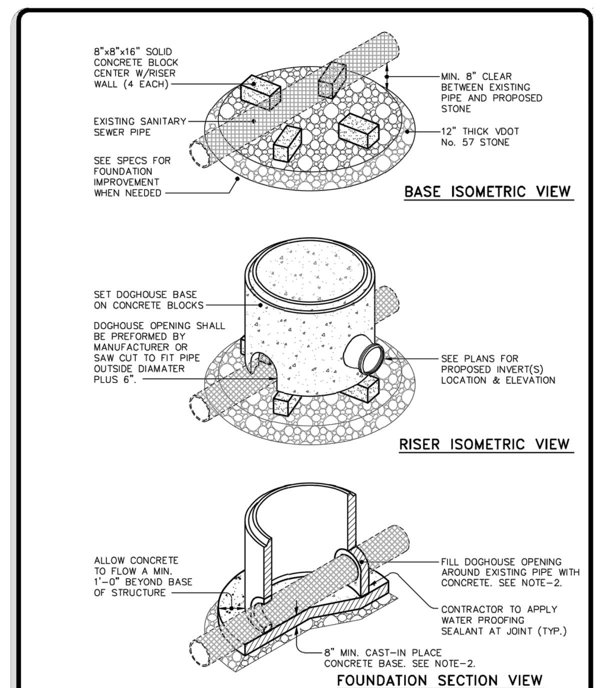

THE CITY OF LYNCHBURG
PRECAST CONCRETE DOGHOUSE MANHOLE
SCALE: NOT TO SCALE | DETAIL # 27.07 | REVISION DATE: 12-12-2014 | SHEET # 1 OF 2
USE WITH THE CITY OF LYNCHBURG STANDARD SPECIFICATIONS ONLY

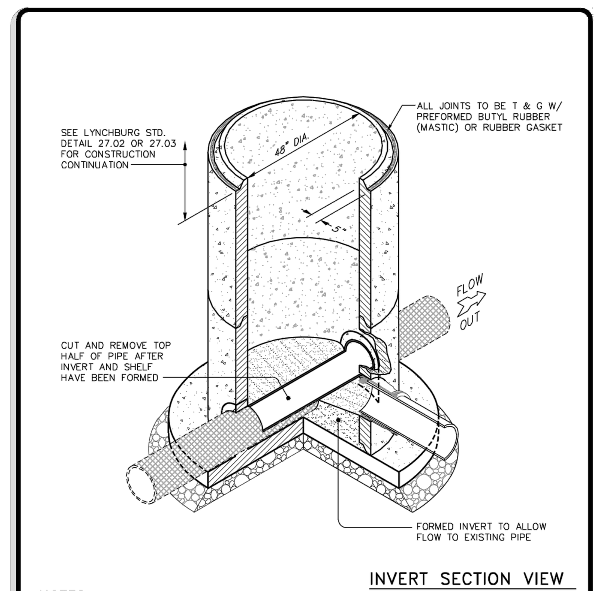

NOTES:
1. MAXIMUM DEPTH 4' DIA. MANHOLE = 20' (SEE SPECIFICATIONS).
2. CONCRETE SHALL BE 4000 PSI, A-4 CONCRETE WITH AN Az LIFE FACTOR DESIGN ≥90.

THE CITY OF LYNCHBURG
PRECAST CONCRETE DOGHOUSE MANHOLE
SCALE: NOT TO SCALE | DETAIL # 27.07 | REVISION DATE: 12-12-2014 | SHEET # 2 OF 2
USE WITH THE CITY OF LYNCHBURG STANDARD SPECIFICATIONS ONLY

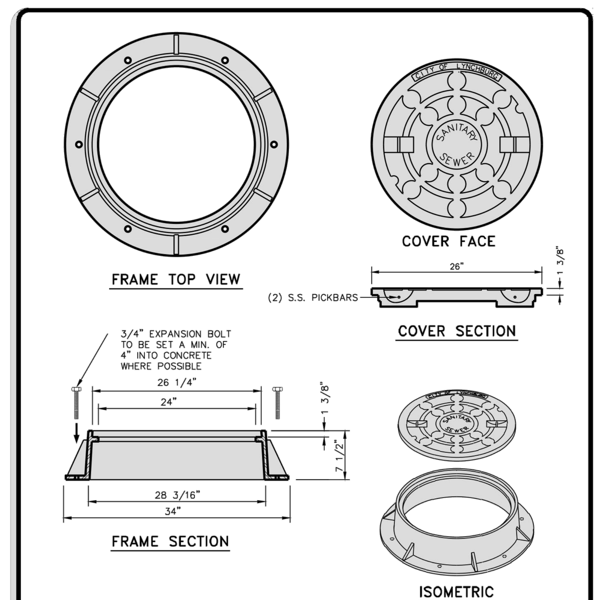

NOTES:
1. PARTS #'s: US FOUNDRY 710 RING AND DP COVER, EAST JORDAN IRON WORKS OR APPROVED EQUAL.
2. MANHOLE FRAMES AND COVERS SHALL BE ROADWAY TYPE WITH DEEP SOCKET COVERS. MACHINE FRAMES AND COVERS TO PREVENT RATTLING. CASTINGS SHALL BE GRAY IRON MEETING REQUIREMENTS OF ASTM A48, CLASS 30.

THE CITY OF LYNCHBURG
STANDARD MANHOLE FRAME and COVER
SCALE: NOT TO SCALE | DETAIL # 27.10 | REVISION DATE: 12-12-2014 | SHEET # 1 OF 1
USE WITH THE CITY OF LYNCHBURG STANDARD SPECIFICATIONS ONLY

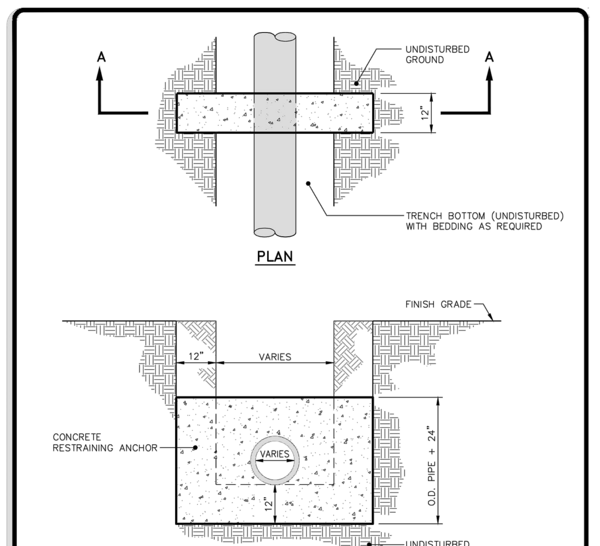

NOTES:
1. SPACING FOR CONCRETE RESTRAINING ANCHORS SHALL BE AS SHOWN ON THE PLANS.
2. THE PORTION OF THE ANCHOR IN UNDISTURBED GROUND SHALL BE POURED UNFORMED.
3. CONCRETE SHALL BE 3000 PSI.
4. CONCRETE ANCHOR TO BE POURED AROUND BELL OF PIPE WHERE APPLICABLE.
5. USE ON SLOPES EQUAL TO OR GREATER THAN 20%.
6. PIPE SHALL BE DUCTILE IRON PIPE.

THE CITY OF LYNCHBURG
CONCRETE RESTRAINING ANCHOR
SCALE: NOT TO SCALE | DETAIL # 27.21 | REVISION DATE: 12-14-2013 | SHEET # 1 OF 1
USE WITH THE CITY OF LYNCHBURG STANDARD SPECIFICATIONS ONLY

DI-3A,3B,3C

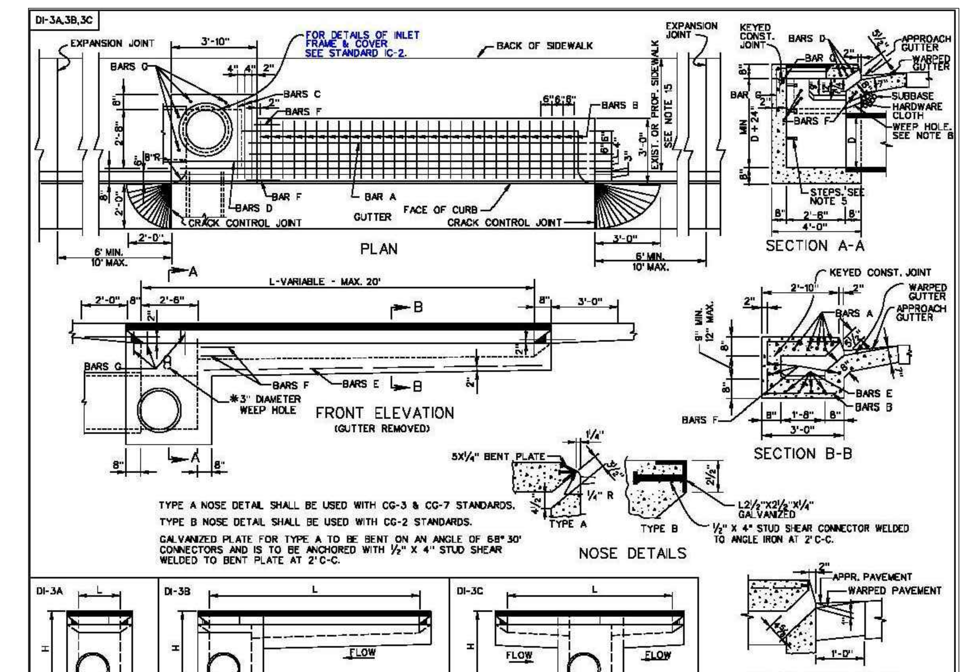

TYPE A NOSE DETAIL SHALL BE USED WITH CG-3 & CG-7 STANDARDS.
TYPE B NOSE DETAIL SHALL BE USED WITH CG-2 STANDARDS.
GALVANIZED PLATE FOR TYPE A TO BE BENT ON AN ANGLE OF 68° 30' CONNECTORS AND IS TO BE ANCHORED WITH ½" X 4" STUD SHEAR WELDED TO BENT PLATE AT 2' C-C.

SHEET 1 OF 2

STANDARD CURB DROP INLET
12" - 30" PIPE: MAXIMUM DEPTH (H) = 8'
VIRGINIA DEPARTMENT OF TRANSPORTATION
SPECIFICATION REFERENCE 233 302
104.09

DI-1

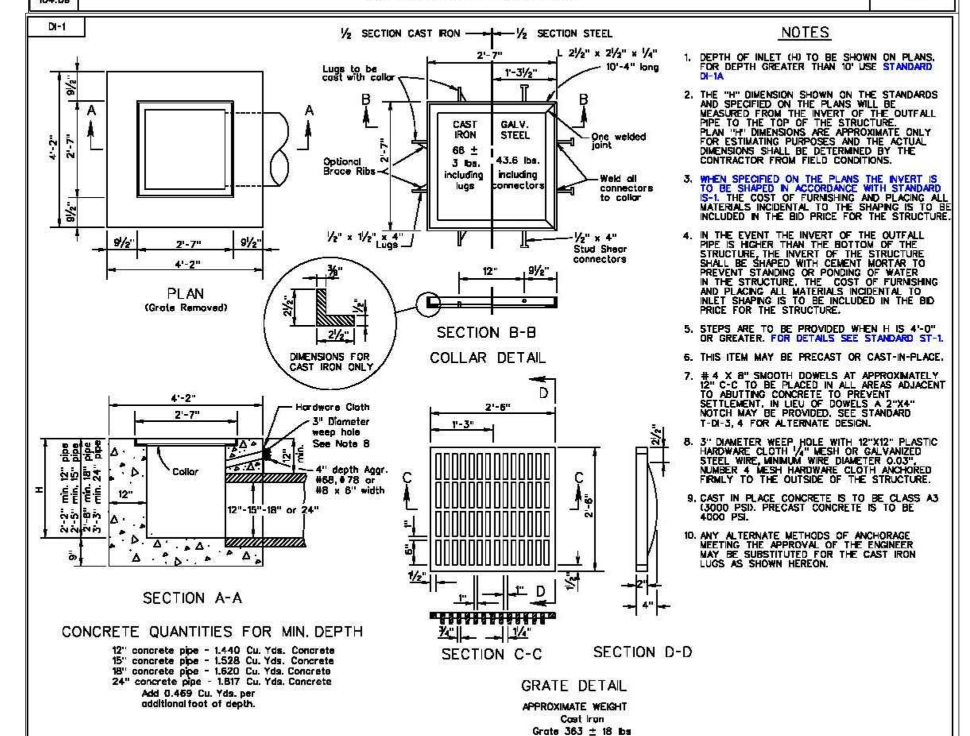

CONCRETE QUANTITIES FOR MIN. DEPTH
12" concrete pipe - 1.440 Cu. Yds. Concrete
15" concrete pipe - 1.528 Cu. Yds. Concrete
18" concrete pipe - 1.620 Cu. Yds. Concrete
24" concrete pipe - 1.817 Cu. Yds. Concrete
Add 0.469 Cu. Yds. per additional foot of depth.

NOTES
1. DEPTH OF INLET (H) TO BE SHOWN ON PLANS. FOR DEPTH GREATER THAN 10' USE STANDARD DI-1A
2. THE "H" DIMENSION SHOWN ON THE STANDARDS AND SPECIFIED ON THE PLANS WILL BE MEASURED FROM THE INVERT OF THE OUTFALL PIPE TO THE TOP OF THE STRUCTURE. PLAN "H" DIMENSIONS ARE APPROXIMATE ONLY FOR ESTIMATING PURPOSES AND THE ACTUAL DIMENSIONS SHALL BE DETERMINED BY THE CONTRACTOR FROM FIELD CONDITIONS.
3. WHEN SPECIFIED ON THE PLANS THE INVERT IS TO BE SHAPED IN ACCORDANCE WITH STANDARD IS-1. THE COST OF FURNISHING AND PLACING ALL MATERIALS INCIDENTAL TO THE SHAPING IS TO BE INCLUDED IN THE BID PRICE FOR THE STRUCTURE.
4. IN THE EVENT THE INVERT OF THE OUTFALL PIPE IS HIGHER THAN THE BOTTOM OF THE STRUCTURE, THE INVERT OF THE STRUCTURE SHALL BE SHAPED WITH CEMENT MORTAR TO PREVENT STANDING OR PONDING OF WATER IN THE STRUCTURE. THE COST OF FURNISHING AND PLACING ALL MATERIALS INCIDENTAL TO INLET SHAPING IS TO BE INCLUDED IN THE BID PRICE FOR THE STRUCTURE.
5. STEPS ARE TO BE PROVIDED WHEN H IS 4'-0" OR GREATER. FOR DETAILS SEE STANDARD ST-1.
6. THIS ITEM MAY BE PRECAST OR CAST-IN-PLACE.
7. # 4 X 8" SMOOTH DOWELS AT APPROXIMATELY 12" C-C TO BE PLACED IN ALL AREAS ADJACENT TO ABUTTING CONCRETE TO PREVENT SETTLEMENT. IN LIEU OF DOWELS A 2"X4" NOTCH MAY BE PROVIDED. SEE STANDARD T-DI-3, 4 FOR ALTERNATE DESIGN.
8. 3" DIAMETER WEEP HOLE WITH 12"X12" PLASTIC HARDWARE CLOTH ¼" MESH OR GALVANIZED STEEL WIRE, MINIMUM WIRE DIAMETER 0.03". NUMBER 4 MESH HARDWARE CLOTH ANCHORED FIRMLY TO THE OUTSIDE OF THE STRUCTURE.
9. CAST IN PLACE CONCRETE IS TO BE CLASS A3 (3000 PSI). PRECAST CONCRETE IS TO BE 4000 PSI.
10. ANY ALTERNATE METHODS OF ANCHORAGE MEETING THE APPROVAL OF THE ENGINEER MAY BE SUBSTITUTED FOR THE CAST IRON LUGS AS SHOWN HEREON.

STANDARD DROP INLET
12" - 24" PIPE: MAXIMUM DEPTH (H) = 10'
VIRGINIA DEPARTMENT OF TRANSPORTATION
SPECIFICATION REFERENCE 233 302
104.01

NO.	BY	REVISIONS	DATE

COMMONWEALTH OF VIRGINIA
PATRICK C. PROFFITT
Lic. No. 034330
02/03/2015
PROFESSIONAL ENGINEER

Virginia A & E
VIRGINIA A&E, PLLC
1115 VISTA PARK DRIVE
FOREST, VIRGINIA 24551
PHONE: (434) 316-6001

LYNCHBURG JUVENILE SERVICES GROUP HOME
CITY PROJECT NO: B0158
ENGINEERING PROJECT NO: 10043-BG
1401 FLORIDA AVENUE
LYNCHBURG, VIRGINIA

DETAIL SHEET

DATE: 03 FEB 15
PROJECT NO: 20120440

HURT & PROFFITT INCORPORATED
*ENGINEERING ›› SURVEYING ›› PLANNING
2524 LANGHORNE ROAD
LYNCHBURG VA 24501
800.242.4906 TOLL FREE
434.847.7796 MAIN
434.847.0047 FAX

Full Scale Verification
0" 1"

Drawing No.:
C504

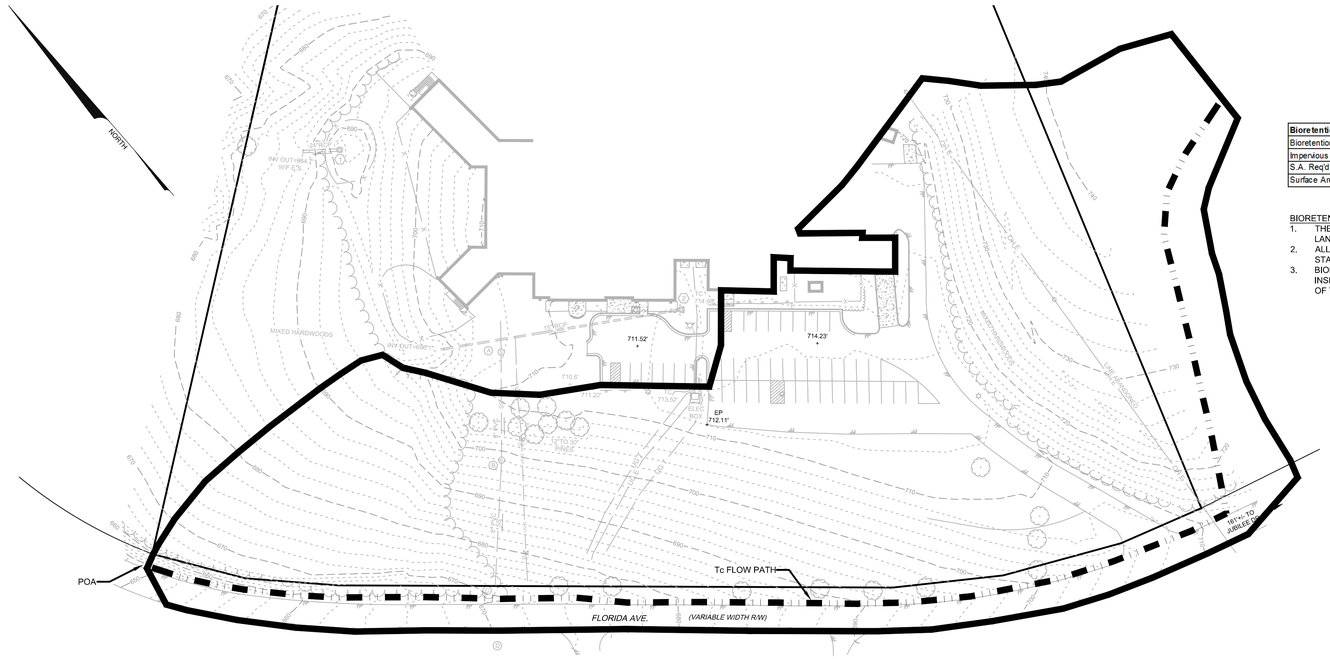

PRE-DEVELOPED DRAINAGE AREA MAP

50 25 0 50 100
GRAPHIC SCALE IN FEET
1" = 50'

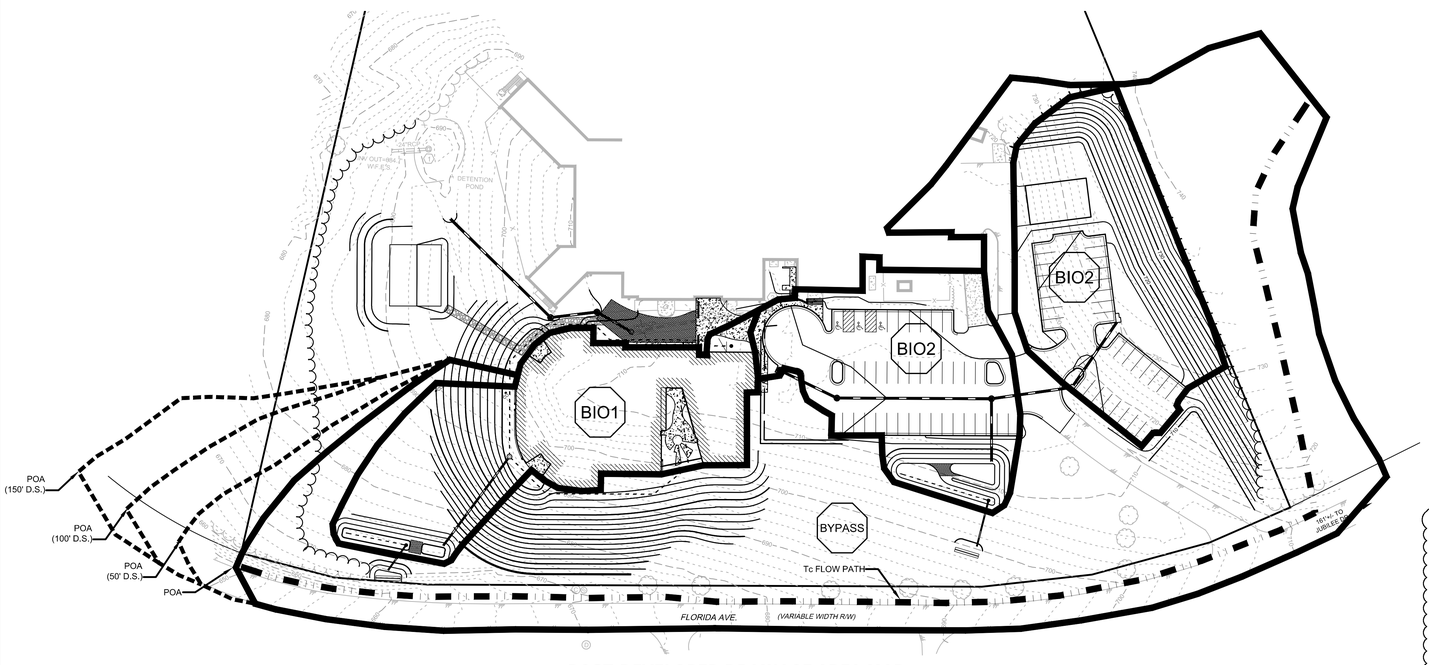

POST-DEVELOPED DRAINAGE AREA MAP

Bioretention Calculations			
Bioretention ID		1	2
Impervious Area	AC	0.4	0.7
S.A. Req'd for 1 x WQV (2.5%)	SF	436	762
Surface Area Provided	SF	450	800

BIORETENTION NOTES:
1. THE BIORETENTION BASINS SHALL BE INSTALLED WITH LANDSCAPING AS THE LAST STAGE OF THE PROJECT.
2. ALL CONTRIBUTING AREAS SHALL BE ADEQUATELY STABILIZED PRIOR TO INSTALLATION.
3. BIORETENTION INSTALLATION, MAINTENANCE, AND INSPECTION SHALL CONFORM TO MINIMUM STANDARD 3.11 OF THE VIRGINIA STORMWATER MANAGEMENT HANDBOOK.

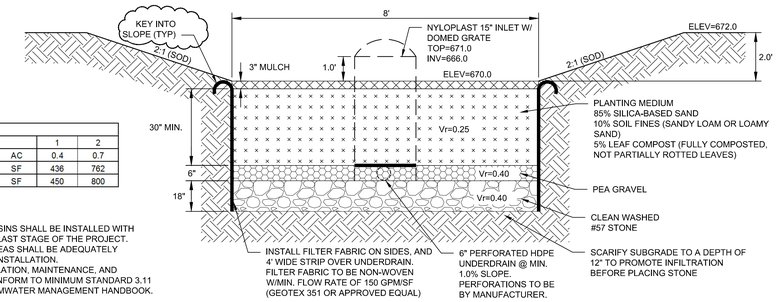

BIORETENTION FILTER 1 DETAIL

N.T.S.

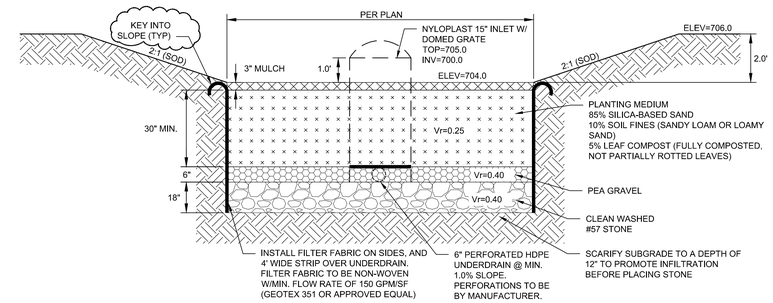

BIORETENTION FILTER 2 DETAIL

N.T.S.

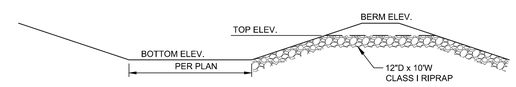

SEDIMENT FOREBAY DETAIL

N.T.S.

Sediment Forebay Calculations			
Forebay ID		1	2
Impervious Area	AC	0.4	0.7
Volume Req'd for 0.2"/imp. Ac	CF	290	508
Volume Provided	CF	300	520
Bottom Elevation	FT	668.0	704.0
Top Elevation	FT	671.0	705.0
Berm Elevation	FT	672.0	706.0
Berm Width	FT	2	2
Side Slopes		2:1	2:1

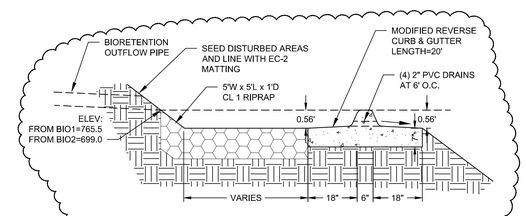

NOTE: SPREADER TOP TO BE WITHIN DESIGN ELEVATION ±0.01' FOR ENTIRE LENGTH.

LEVEL SPREADER DETAIL

N.T.S.

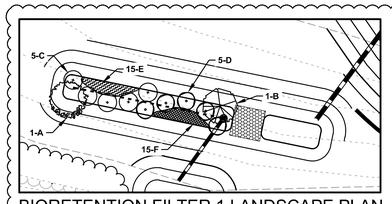

BIORETENTION FILTER 1 LANDSCAPE PLAN

1"=20'

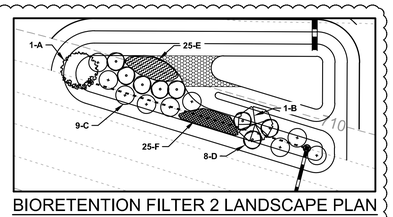

BIORETENTION FILTER 2 LANDSCAPE PLAN

1"=20'

Pre-developed Drainage Area Calculations		
Total Area	AC	5.7
Impervious Area	AC	1.2
Pervious Area	AC	4.5
C-Value		0.43
Time of Concentration	MIN	18
Design Flow (2-YR)	CFS	**6.3**
Design Flow (10-YR)	CFS	**8.7**

Post-Developed Drainage Area Calculations				
Description		To Bioretention 1	To Bioretention 2	Bypass
Total Area	AC	0.8	1.4	3.7
Impervious Area	AC	0.4	0.7	0.9
Pervious Area	AC	0.4	0.7	2.8
C-Value		0.60	0.60	0.45
Time of Concentration	MIN	5	5	18
Design Flow (2-YR)	CFS	2.0	3.5	4.2
Design Flow (10-YR)	CFS	2.7	4.7	5.8
Combined Routed Flow (2-YR)	CFS	**6.3**		
Combined Routed Flow (10-YR)	CFS	**8.5**		

Adequate Channel Calculations Summary						
Description		**POA**	**50' Downstream**	**100' Downstream**	**150' Downstream**	
Design Flow (2-YR)	CFS	6.3	6.4	6.5	6.6	
Design Flow (10-YR)	CFS	8.5	8.7	8.9	9.1	
Bottom Width	FT	0	0	0	0	
Channel Depth	FT	0.6	0.6	0.6	0.6	
Design Water Depth (10-YR)	FT	0.5	0.5	0.5	0.5	
Side Slopes	H:V	14:1; 2:1	14:1; 2:1	14:1; 2:1	14:1; 2:1	
Channel Slope	%	6	6	6	6	
Flow velocity (2-YR)	FPS	4.3	4.3	4.3	4.3	
Lining Material		Existing Roadside Channel	Existing Roadside Channel	Existing Roadside Channel	Existing Roadside Channel	

Bioretention Planting Schedule			
Key	**Quantity**	**Common Name**	**Size**
A	2	Flowering Dogwood	1.5" cal.
B	2	Serviceberry	1.5" cal.
C	14	Swamp Azalea	30" min.
D	13	Sweetshrub	30" min.
E	40	Cardinal Flower	gal.
F	40	Blackeyed Susan	gal.

HURT & PROFFITT INCORPORATED
* ENGINEERING ›› SURVEYING ›› PLANNING
2524 LANGHORNE ROAD
LYNCHBURG VA 24501
800.242.4906 TOLL FREE
434.847.7796 MAIN
434.847.0047 FAX

NO.	BY	REVISIONS	DATE

COMMONWEALTH OF VIRGINIA
PATRICK C. PROFFITT
Lic. No. 034330
02/03/2015
PROFESSIONAL ENGINEER

Virginia A&E
VIRGINIA A&E, PLLC
1115 VISTA PARK DRIVE
FOREST, VIRGINIA 24551
PHONE: (434) 316-6001

LYNCHBURG JUVENILE SERVICES GROUP HOME
CITY PROJECT NO: B0158
ENGINEERING PROJECT NO: 10043-BG
1401 FLORIDA AVENUE
LYNCHBURG, VIRGINIA

DRAINAGE AREA MAPS & CALCULATIONS

DATE: 01/16/15
PROJECT NO: 2015-46

Full Scale Verification
0" 1"

Drawing No.:
C801

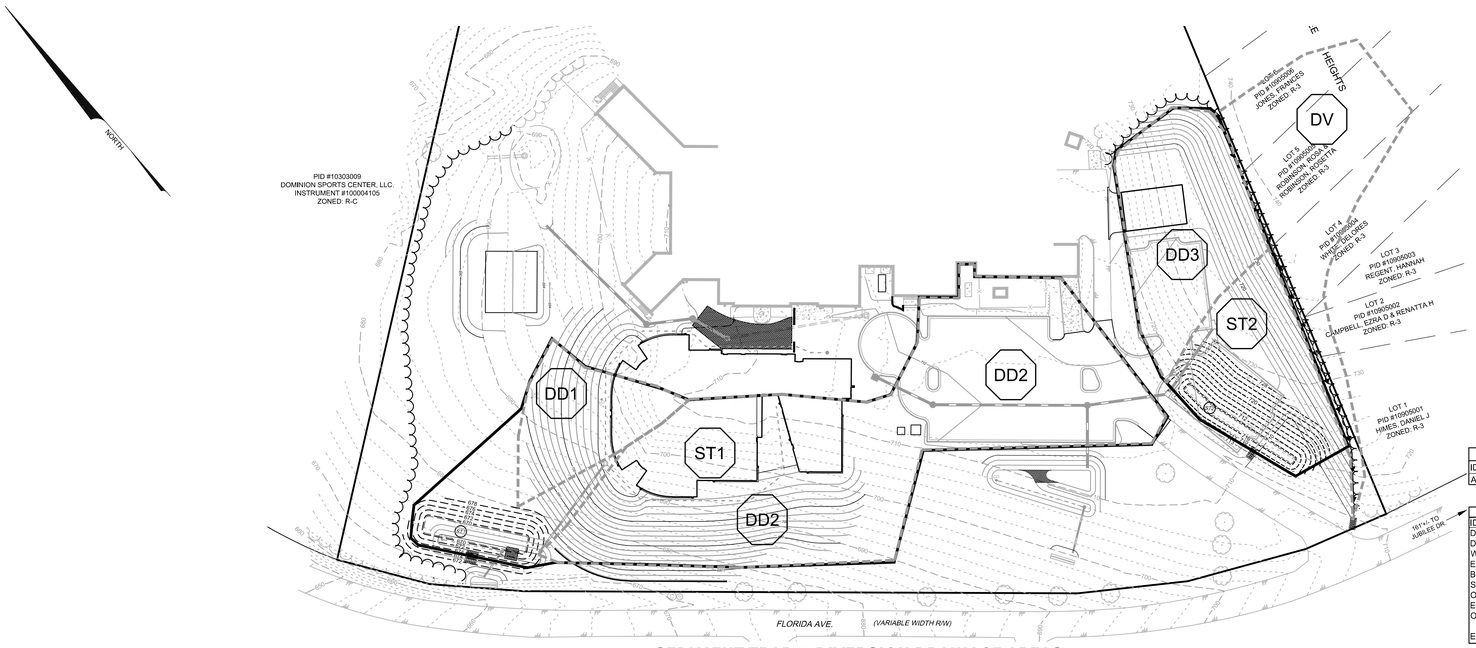

SEDIMENT TRAP & DIVERSION DRAINAGE AREAS

Description	Method	Frequency	Time of the year
SOIL			
Inspect and Repair Erosion	Visual	Monthly	Monthly
ORGANIC LAYER			
Remulch any void areas	By hand	Whenever needed	Whenever needed
Remove previous mulch layer before applying new layer (optional)	By hand	Once every two to three years	Spring
Any additional mulch added (optional)	By hand	Once a year	Spring
PLANTS			
Removal and replacement of all dead and diseased vegetation considered beyond treatment	See planting specifications	Twice a year	3/15 to 4/30 and 10/1 to 11/30
Treat all diseased trees and shrubs	Mechanical or by hand	N/A	Varies, depends on insect or disease infestation
Watering of plant material shall take place at the end of each day for fourteen consecutive days after planting has been completed	By hand	Immediately after completion of project	N/A
Replace stakes after one year	By hand	Once a year	Only remove stakes In the spring
Replace any deficient stakes or wires	By hand	N/A	Whenever needed
Check for accumulated sediments	Visual	Monthly	Monthly

3.09 - DIVERSION AREAS				
ID	DD1	DD2	DD3	DV
AREA	0.22AC	1.31AC	0.38AC	0.30AC

3:13 - TEMPORARY SEDIMENT TRAP		
ID	ST-1	ST-2
DRAINAGE AREA	1.68 AC	0.76 AC
DRY STORAGE VOLUME	132 CY	58 CY
WET STORAGE VOLUME	119 CY	54 CY
EXCAVATION DEPTH	2.5'	2.0'
BOTTOM ELEVATION	669.5	709.5
SEDIMENT CLEANOUT ELEVATION	670.5	710.25
OUTLET ELEVATION	673.0	712.0
EMBANKMENT ELEVATION	674.0	713.0
OUTLET SPILLWAY LENGTH (ACROSS FLOW)	10.0'	5.0'
EMBANKMENT TOP WIDTH	4.0'	4.0'

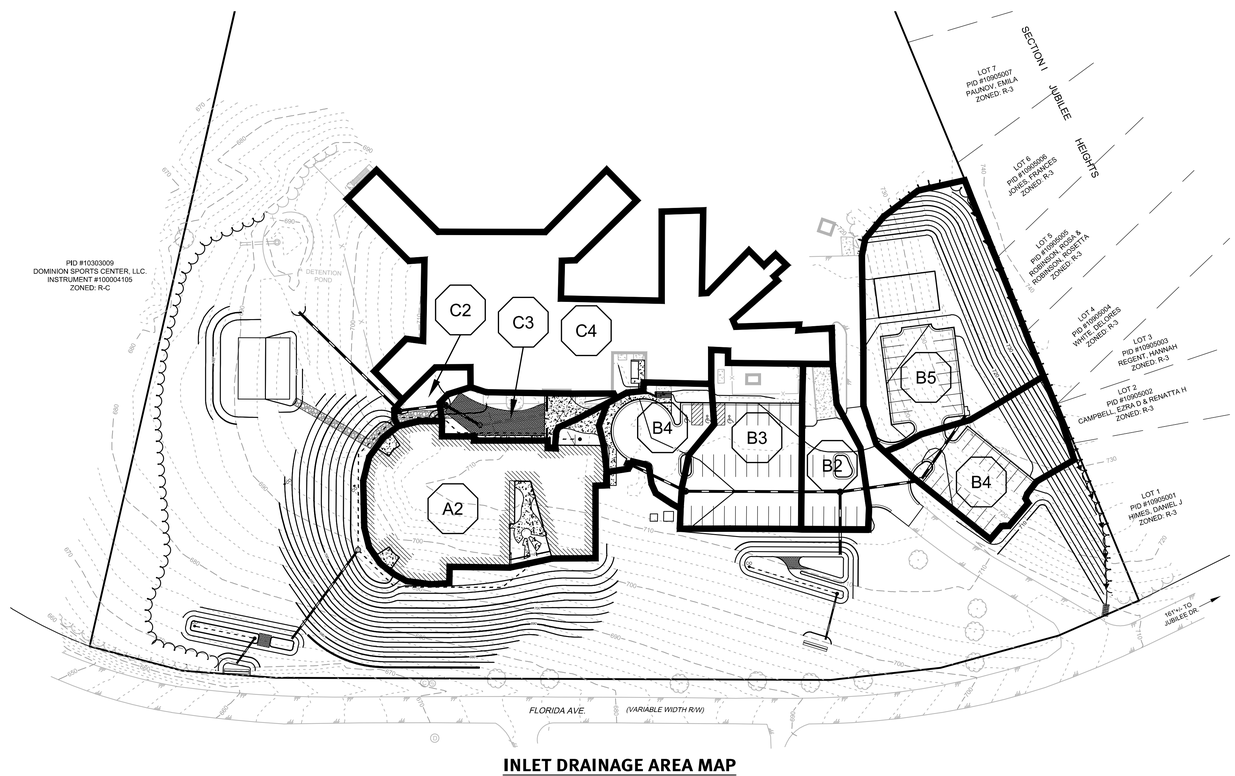

INLET DRAINAGE AREA MAP

Pipes

Page 1

Line No.	Inlet ID	Line Rise (in)	Drng Area (ac)	Runoff Coeff (C)	Incr CxA	Total CxA	Inlet Time (min)	Tc (min)	i Sys (in/hr)	Flow Rate (cfs)	Capac Full (cfs)	Vel Ave (ft/s)	Invert Dn (ft)	Invert Up (ft)	HGL Dn (ft)	HGL Up (ft)	Gnd/Rim El Dn (ft)	Gnd/Rim El Up (ft)
1	A2	12	0.50	0.90	0.45	0.45	5.0	5.0	5.61	2.53	23.70	4.48	671.00	705.00	671.67	705.67	672.00	710.50
2	B2	15	0.15	0.90	0.14	0.99	5.0	6.0	5.35	5.27	7.58	5.45	704.50	705.10	705.42	706.02	705.75	712.80
3	B3	15	0.25	0.90	0.23	0.36	5.0	5.3	5.53	1.99	7.11	3.02	705.20	706.50	706.02	707.06 j	712.80	711.20
4	B4	15	0.15	0.90	0.14	0.14	5.0	5.0	5.61	0.76	7.52	2.27	706.60	707.20	707.06	707.55 j	711.20	710.00
5	B5	15	0.20	0.70	0.14	0.49	5.0	5.4	5.51	2.70	13.05	3.65	705.20	707.50	706.02	708.16 j	712.80	712.00
6	B6	15	0.50	0.70	0.35	0.35	5.0	5.0	5.61	1.96	8.56	3.68	707.60	708.60	708.16	709.16	712.00	711.06
7	C2	15	0.05	0.90	0.05	0.90	5.0	5.4	5.51	4.96	19.60	5.30	691.00	700.00	691.89	700.89	692.25	705.90
8	C3	15	0.15	0.90	0.14	0.86	5.0	5.2	5.56	4.76	10.15	5.20	700.10	700.90	700.97	701.77	705.90	707.90
9	C4	15	0.80	0.90	0.72	0.72	5.0	5.0	5.61	4.04	9.52	4.84	701.00	701.60	701.80	702.40	707.90	710.50

Project File: Juvenile Services Group Home.stm | Number of lines: 9 | Date: 11-11-2014

NOTES: Intensity = 41.63 / (Inlet time + 10.00) ^ 0.74 -- Return period = 10 Yrs. ; ** Critical depth

Hydraflow Storm Sewers Extension

50 25 0 50 100
GRAPHIC SCALE IN FEET
1" = 50'

HURT & PROFFITT INCORPORATED
*ENGINEERING >> SURVEYING >> PLANNING
2524 LANGHORNE ROAD
LYNCHBURG VA 24501
800.242.4906 TOLL FREE
434.847.7796 MAIN
434.847.0047 FAX

NO.	BY	REVISIONS	DATE

COMMONWEALTH OF VIRGINIA
PATRICK C. PROFFITT
Lic. No. 034330
02/03/2015
PROFESSIONAL ENGINEER

Virginia A&E
VIRGINIA A&E, PLLC
1115 VISTA PARK DRIVE
FOREST, VIRGINIA 24551
PHONE: (434) 316-6001

LYNCHBURG JUVENILE SERVICES GROUP HOME
CITY PROJECT NO: B0158
ENGINEERING PROJECT NO: 10043-BG
1401 FLORIDA AVENUE
LYNCHBURG, VIRGINIA

DRAINAGE AREA MAPS & CALCULATIONS

PROJECT NO: 2013-044
DATE: 03-18-15

Full Scale Verification
0" 1"

Drawing No.:
C802

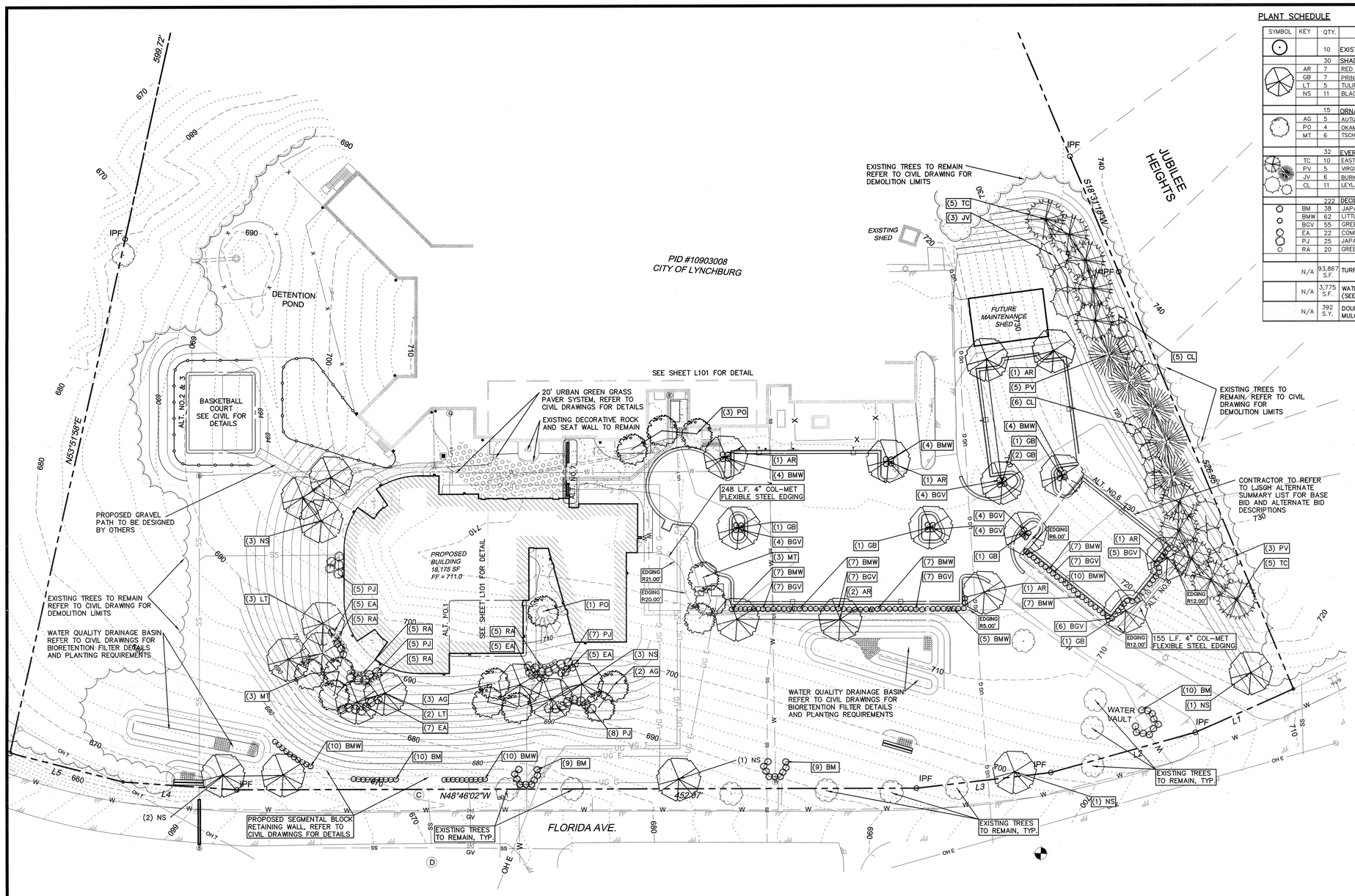

PLANT SCHEDULE

SYMBOL	KEY	QTY.	NAME	SIZE	CONC.
		10	EXISTING TREE TO REMAIN		
		30	SHADE TREE		
	AR	7	RED MAPLE – ACER RUBRUM	2.5" CAL MIN.	B&B
	GB	7	PRINCETON SENTRY – GINKO BILOBA 'PRINCETON SENTRY'		
	LT	5	TULIP POPLAR – LIRIODENDRON TULIPIFERA		
	NS	11	BLACK GUM – NYSSA SYLVATICA		
		15	ORNAMENTAL TREE		
	AG	5	AUTUMN BRILLIANCE SERVICEBERRY–AMELANCHIER X GRANDIFLORA 'AUTUMN BRILLIANCE'	2.5" CAL MIN.	B&B
	PO	4	OKAME CHERRY – PRUNUS 'OKAME'		
	MT	6	TSCHONOSKII CRABAPPLE – MALUS TSCHONOSKII		
		32	EVERGREEN TREE		
	TC	10	EASTERN HEMLOCK – TSUGA CANADENSIS		
	PV	5	VIRGINIA PINE – PINUS VIRGINIANA	4' HT. MIN.	B&B
	JV	6	BURKII RED CEDAR – JUNIPERUS VIRGINIANA 'BURKII'		
	CL	11	LEYLAND CYPRESS – CUPRESSOCYPARIS LEYLANDII		
		222	DECIDUOUS/EVERGREEN SHRUBS/ORNAMENTAL GRASSES/PERENNIALS		
	BM	38	JAPANESE BOXWOOD – BUXUS MICROPHYLLA VAR. JAPONICA	3 GAL.	CONT.
	BMW	62	LITTLELEAF BOXWOOD – BUXUS MICROPHYLLUS " WINTER GEM'		
	BGV	55	GREEN VELVET BOXWOOD – BUXUS 'GREEN VELVET'		
	EA	22	COMPACT BURNING BUSH – EUONYMUS ALATUS 'COMPACTUS'		
	PJ	25	JAPANESE ANDROMEDA – PIERIS JAPONICA 'MOUNTAIN FIRE'		
	RA	20	GREEN JEANS ALPINE CURRANT – RIBES ALPINUM 'SPREG (GREEN JEAN)'		
				FLAT	24"O.C.
	N/A	93,867 S.F.	TURF TYPE FESCUE (SEED) [REFER TO CIVIL DRAWINGS FOR EROSION CONTROL]	SEED	N/A
	N/A	3,775 S.F.	WATER QUALITY DRAINAGE BASIN WITH NATIVE PLANTINGS (SEE THIS SHEET FOR DETAIL)		
	N/A	392 S.Y.	DOUBLE SHREDDED HARD-WOOD MULCH (4" THICK)		

LANDSCAPE NOTES:

1. ALL LANDSCAPE AREAS TO BE TURF COMMON TO REGION EXCEPT WHERE OTHER PLANT MATERIAL IS CALLED FOR. ALL TURFED AREAS SHALL CONSIST OF A MINIMUM 8" THICKNESS TOPSOIL FREE OF CLAY DEBRIS, STICKS OR ROCKS IN EXCESS OF 1" IN DIAMETER. ALL TOPSOIL AREAS SHALL BE FINE GRADED AND RAKED, REMOVING RIDGES AND FILLING DEPRESSIONS AS REQUIRED TO MEET FINISHED GRADES AND CREATE POSITIVE DRAINAGE AWAY FROM BUILDINGS.
2. ALL TREES AND SHURBS TO BE PLANTED IN MULCH BEDS WITH EDGE STRIPS TO SEPARATE TURF GRASS AREAS.
3. FOR ANY LANDSCAPE AREA SO DESIGNATED TO REMAIN WHETHER ON OR OFF SITE, REMOVE WEEDS, ROCKS, CONSTRUCTION ITEMS, ETC., THEN SCARIFY AREA, RESEED, AND FERTILIZE. RIGHT-OF-WAY CURB & GUTTERS ARE TO BE CLEANED OF DEBRIS.
4. FINISHED GRADES IN LANDSCAPE ISLANDS AND PENNENSULAS SHALL BE INSTALLED SO THAT THEY ARE ONE INCH LOWER THAN THE TOP OF SURROUNDING CURB.
5. PROVIDE A WEED MAT FOR ALL PLANTING AREAS.
6. PLANT MATERIAL SHALL COMPLY WITH ALL SIZING AND GRADING STANDARDS OF THE LATEST EDITION OF "AMERICAN STANDARD FOR NURSERY STOCK."
7. LOCATE ALL UTILITIES PRIOR TO DIGGING. CONTRACTOR SHALL BE RESPONSIBLE FOR ALL DAMAGES.
8. STAKE ALL TREES WITH A MINIMUM OF TWO (2) T-POSTS TO BE REMOVED AFTER ONE (1) YEAR OF INSTALLATION.
9. ALL TREES SHALL BE STAKED IN THE FIELD FOR APPROVAL BY THE ENGINEER PRIOR TO PLANTING.
10. REFER TO SPECIFICATIONS FOR PLANT MATERIAL AND INSTALLATION METHODS.
11. CONTRACTOR TO REFER TO LJSGH ALTERNATE SUMMARY LIST FOR BASE BID AND ALTERNATE BID DESCRIPTIONS.

LANDSCAPE REQUIREMENTS:

STREET TREES:
- ONE (1) TREE PER 40 L.F. OF STREET FRONTAGE (868 L.F.)
  - REQUIRED: 23 TREES
  - EXISTING: 18 TREES
  - PROPOSED: 5 TREES

PARKING AREA LANDSCAPING:
- ONE (1) SHADE TREE PER 8 PARKING STALLS (71 STALLS)
- ONE (1) SHRUB PER PARKING STALL (71 STALLS)
- CONTINUOUS SCREEN 6' IN WIDTH WITH SHRUB 3' IN HT.
  - REQUIRED: 9 TREES, 71 SHRUBS, CONTINUOUS SCREEN
  - PROPOSED: 10 TREES, 72 SHRUBS, AND CONTINUOUS SCREEN

FOUNDATION PLANTINGS:
- ONE (1) ORNAMENTAL TREE PER 50 L.F. (261 L.F. FRONTAGE)
- THREE (3) SMALL SHRUBS PER 10 L.F. (261 L.F. FRONTAGE)
  - REQUIRED: 6 ORNAMENTAL TREES, 79 SHRUBS
  - PROPOSED: 11 ORNAMENTAL TREES, 79 SHRUBS

RETAINING WALL LANDSCAPING:
- ONE LARGE EVERGREEN SHRUB PER 3 L.F. (148 L.F.)
  - REQUIRED: 50 EVERGREEN SHRUBS
  - PROPOSED: 50 EVERGREEN SHRUBS

UTILITY SCREENING:
- ALL GROUND MOUNTED EQUIPMENT TO BE SCREENED FROM VIEW.
  - REQUIRED: CONTINUOUS SCREENING
  - PROPOSED: CONTINUOUS SCREENING

BUFFERING:
- CONTINUOUS EVERGREEN SCREEN ALONG EAST PROPERTY LINE (ADJACENT USE IS RESIDENTIAL)
  - REQUIRED: 20' BUFFER STRIP WITH CONTINUOUS EVERGREEN SCREEN
  - PROPOSED: 20' BUFFER STRIP WITH CONTINUOUS EVERGREEN SCREEN

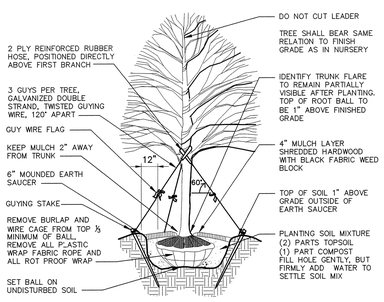

1 **DECIDUOUS TREE PLANTING DETAIL**
NOT TO SCALE

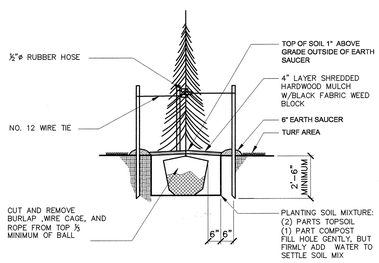

2 **EVERGREEN TREE PLANTING DETAIL**
NOT TO SCALE

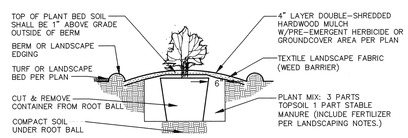

3 **SHRUB PLANTING DETAIL**
NOT TO SCALE

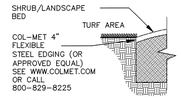

NOTES:
1. NO STEEL EDGING TO BE INSTALLED ALONG SIDEWALKS
2. EDGING SHALL BE UNIFORMLY INSTALLED TO BE COMPLETELY FREE FROM KINKS AND UBRUPT BENDS.
3. EDGING SHALL BE INSTALLED IN ACCORANCE WITH RADII AND DIMENSIONS SPECIFIED ON THE PLAN

4 **LANDSCAPE EDGING DETAIL**
NOT TO SCALE

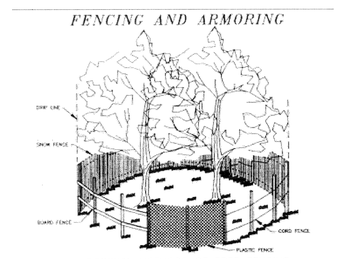

5 **TREE PROTECTION DETAIL**
NOT TO SCALE

41°13'33"

SCALE: 1" = 30'

30 15 0 30 60

NO.	BY	REVISIONS	DATE

COMMONWEALTH OF VIRGINIA
MICHAEL TREANOR
Lic No. 012984
ARCHITECT
2-3-15

Virginia A&E

VIRGINIA A&E, PLLC
1115 VISTA PARK DRIVE
FOREST, VIRGINIA 24551
PHONE: (434) 316-6001

TREANOR ARCHITECTS

TREANOR ARCHITECTS P.A.
1040 VERMONT STREET
LAWRENCE, KANSAS 66044
PHONE: (785) 842-4858

LYNCHBURG JUVENILE SERVICES GROUP HOME

CITY PROJECT NO: B0158
ENGINEERING PROJECT NO: 10043-BG

1401 FLORIDA AVENUE
LYNCHBURG, VIRGINIA

Landscape Plan

DATE: 03 FEB 15

PROJECT NO: DV12.0038

Drawing No.:

L100

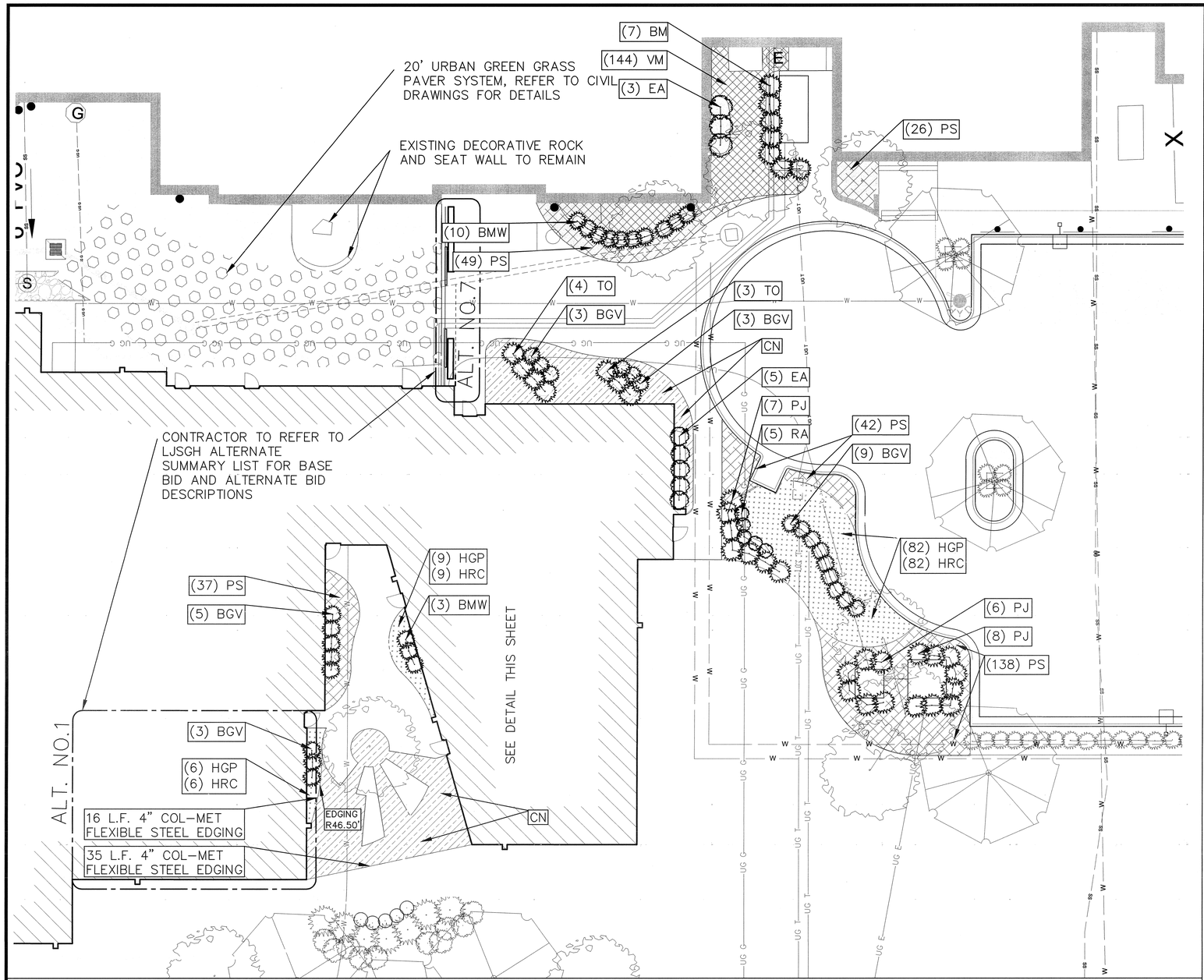

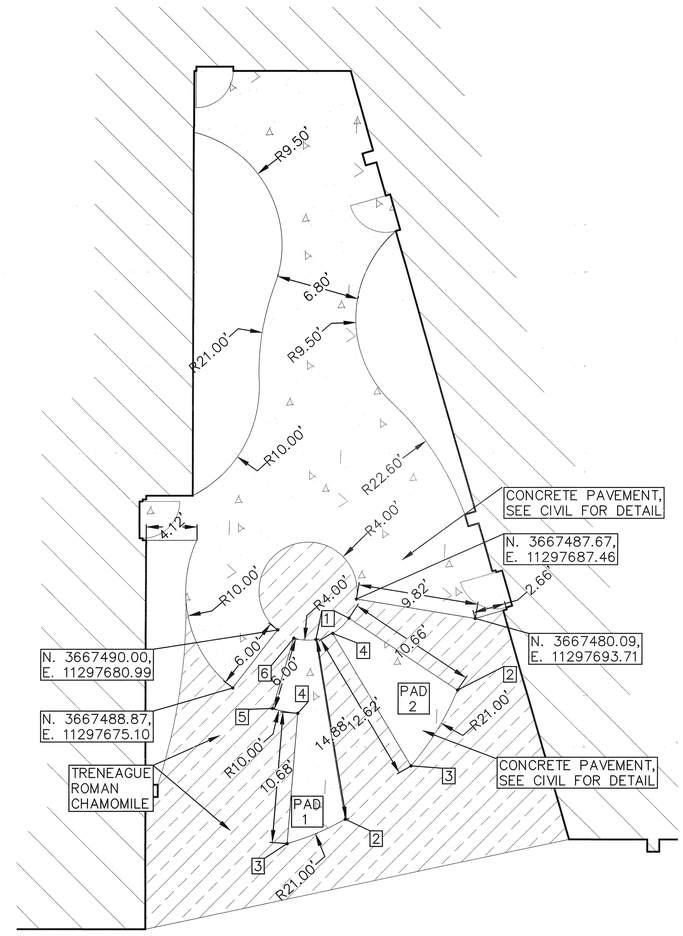

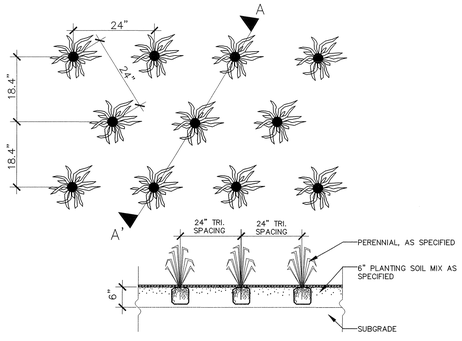

1 **PERENNIAL PLANTING DETAIL**
NOT TO SCALE

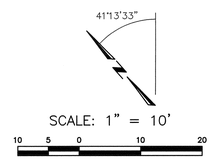

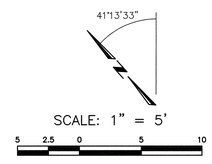

PLANT SCHEDULE

SYMBOL	KEY	QTY.	NAME	SIZE	CONC.
		70	DECIDUOUS/EVERGREEN SHRUBS		
	BM	7	JAPANESE BOXWOOD – BUXUS MICROPHYLLA VAR. JAPONICA	3 GAL.	CONT.
	BMW	13	LITTLELEAF BOXWOOD – BUXUS MICROPHYLLUS " WINTER GEM"		
	BGV	23	GREEN VELVET BOXWOOD – BUXUS "GREEN VELVET"		
	EA	8	COMPACT BURNING BUSH – EUONYMUS ALATUS "COMPACTUS"		
	PJ	7	JAPANESE ANDROMEDA – PIERIS JAPONICA "MOUNTAIN FIRE"		
	RA	5	GREEN JEANS ALPINE CURRANT – RIBES ALPINUM "SPREG (GREEN JEAN)"		
	TO	7	RHEINGOLD ARBORVITAE – THUJA OCCIDENTALIS "RHEINGOLD"		
		630	GRASSES/PERENNIALS/GROUND COVERS		
	VM	144	COMMON PERIWINKLE – VINCA MINOR	FLAT	24" O.C.
	PS	292	CANDY STRIPE CREEPING PHLOX – PHLOX SUBULATA "CANDY STRIPE"	FLAT	24" O.C.
	HGP HRC	97 97	GOLDEN PRIZE DAYLILLY– HEMEROCALLIS "GOLDEN PRIZE" ROCKET CITY DAYLILLY– HEMEROCALLIS "ROCKET CITY"	FLAT	24" O.C.
	CN	965 S.F.	TRENEAGUE ROMAN CHAMOMILE – CHAMAEMELUM NOBILE "TRENEAGUE"	SEED	SEED

PAD 1

1 – N. 3667487.36, E. 11297682.80
2 – N. 3667474.72, E. 11297674.95
3 – N. 3667476.35, E. 11297670.08
4 – N. 3667483.79, E. 11297677.74
5 – N. 3667485.44, E. 11297676.45
6 – N. 3667488.63, E. 11297681.53

PAD 2

1 – N. 3667486.89, E. 11297685.98
2 – N. 3667476.62, E. 11297688.80
3 – N. 3667474.47, E. 11297681.86
4 – N. 3667486.82, E. 11297684.18

NO.	BY	REVISIONS	DATE

COMMONWEALTH OF VIRGINIA
MICHAEL TREANOR
Lic. No. 012994
ARCHITECT
2.3.15

Virginia A&E

VIRGINIA A&E, PLLC
1115 VISTA PARK DRIVE
FOREST, VIRGINIA 24551
PHONE: (434) 316-6001

TREANOR ARCHITECTS

TREANOR ARCHITECTS P.A.
1040 VERMONT STREET
LAWRENCE, KANSAS 66044
PHONE: (785) 842-4858

LYNCHBURG JUVENILE SERVICES GROUP HOME
CITY PROJECT NO: B0158
ENGINEERING PROJECT NO: 10043-BG
1401 FLORIDA AVENUE
LYNCHBURG, VIRGINIA

Landscape Courtyard

DATE: 03 FEB 15
PROJECT NO: DV12.0008

Drawing No.:
L101