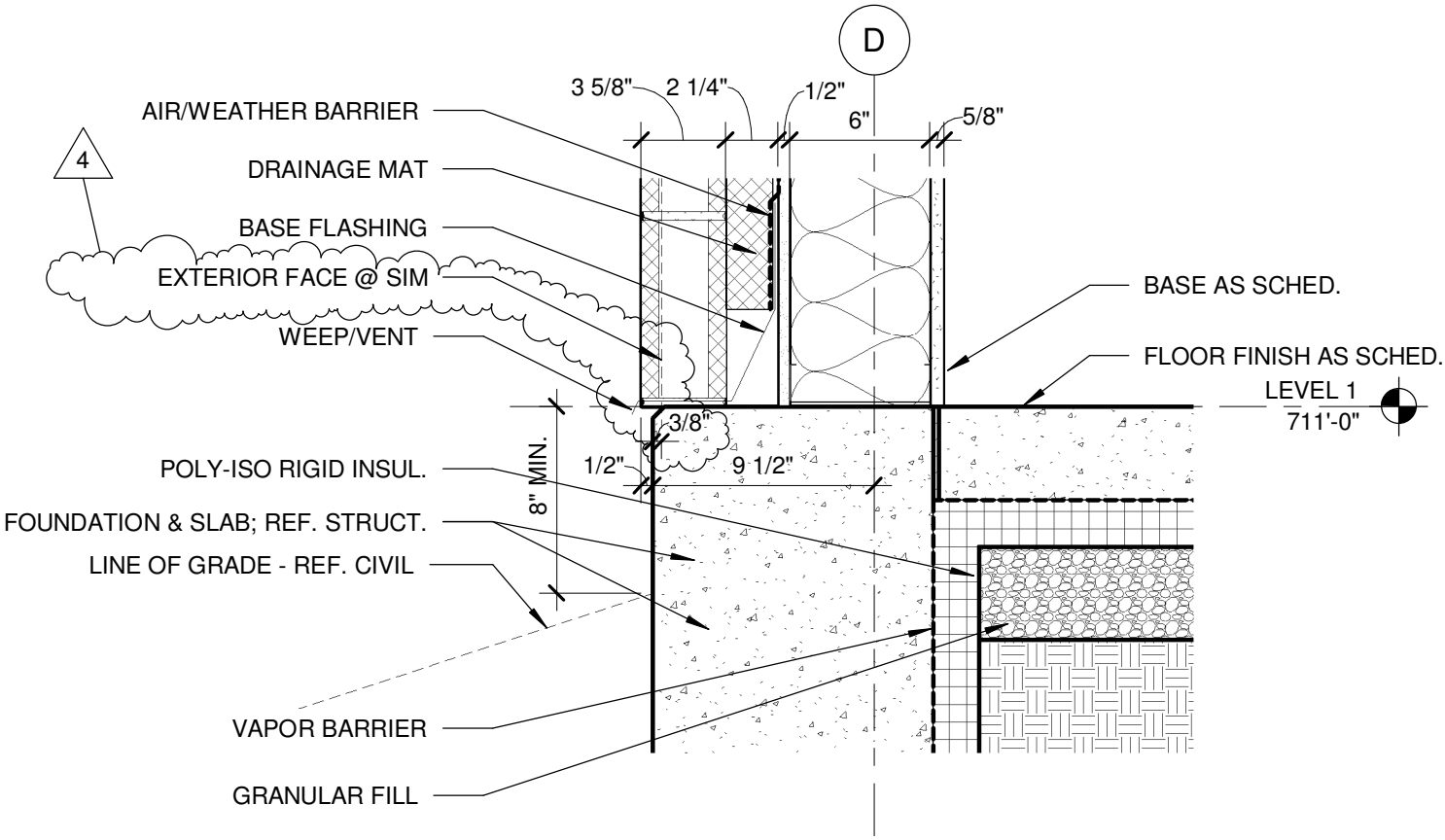

WALL BASE SECTION

1

1 1/2" = 1'-0"

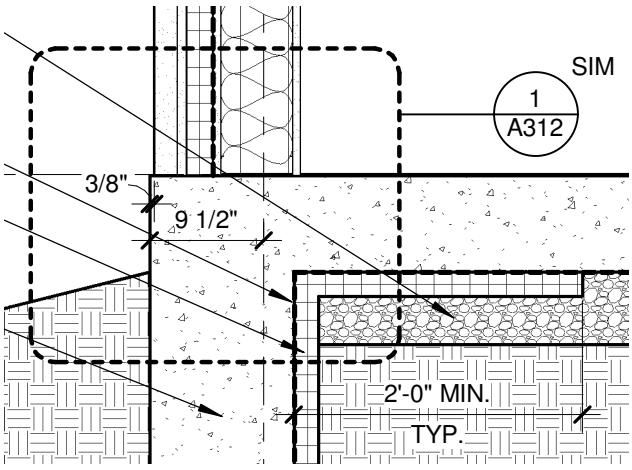

REF: 2/A311

TREANOR ARCHITECTS

DRAWING REFERENCE: A312

PROJECT NO: 11088	VIRGINIA A&E, PLLC 1115 VISTA PARK DRIVE FOREST, VA 24551 PHONE: (434) 316-6001	LYNCHBURG JUVENILE SERVICES GROUP HOME		Full Scale Verification 0" 1"
DATE: 03/05/2015	Virginia A&E	CITY PROJECT NO: B0158 ENGINEERING PROJECT NO: 10043-BG		Drawing No.:
REV:		1401 FLORIDA AVENUE LYNCHBURG, VIRGINIA		ASD 9

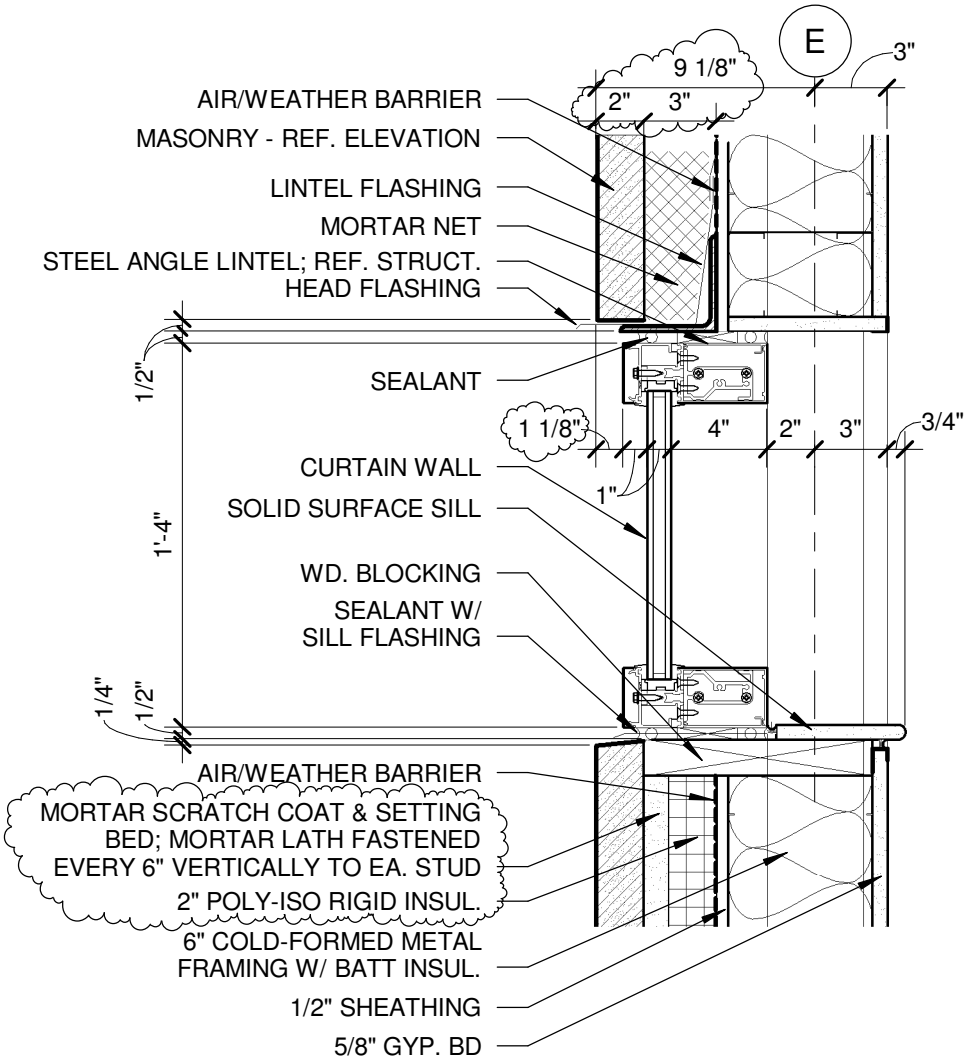

PUNCHED WINDOW DETAIL

1 1/2" = 1'-0"

5

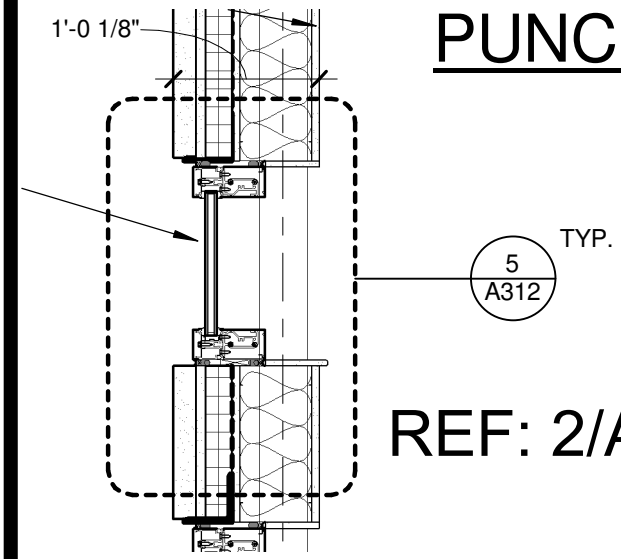

REF: 2/A311

TREANOR ARCHITECTS

DRAWING REFERENCE: A312

PROJECT NO: 11088	VIRGINIA A&E, PLLC 1115 VISTA PARK DRIVE FOREST, VA 24551 PHONE: (434) 316-6001	LYNCHBURG JUVENILE SERVICES GROUP HOME		Full Scale Verification 0" 1"
DATE: 03/05/2015	Virginia A&E	CITY PROJECT NO: B0158 ENGINEERING PROJECT NO: 10043-BG		Drawing No.:
REV:		1401 FLORIDA AVENUE LYNCHBURG, VIRGINIA		ASD 10

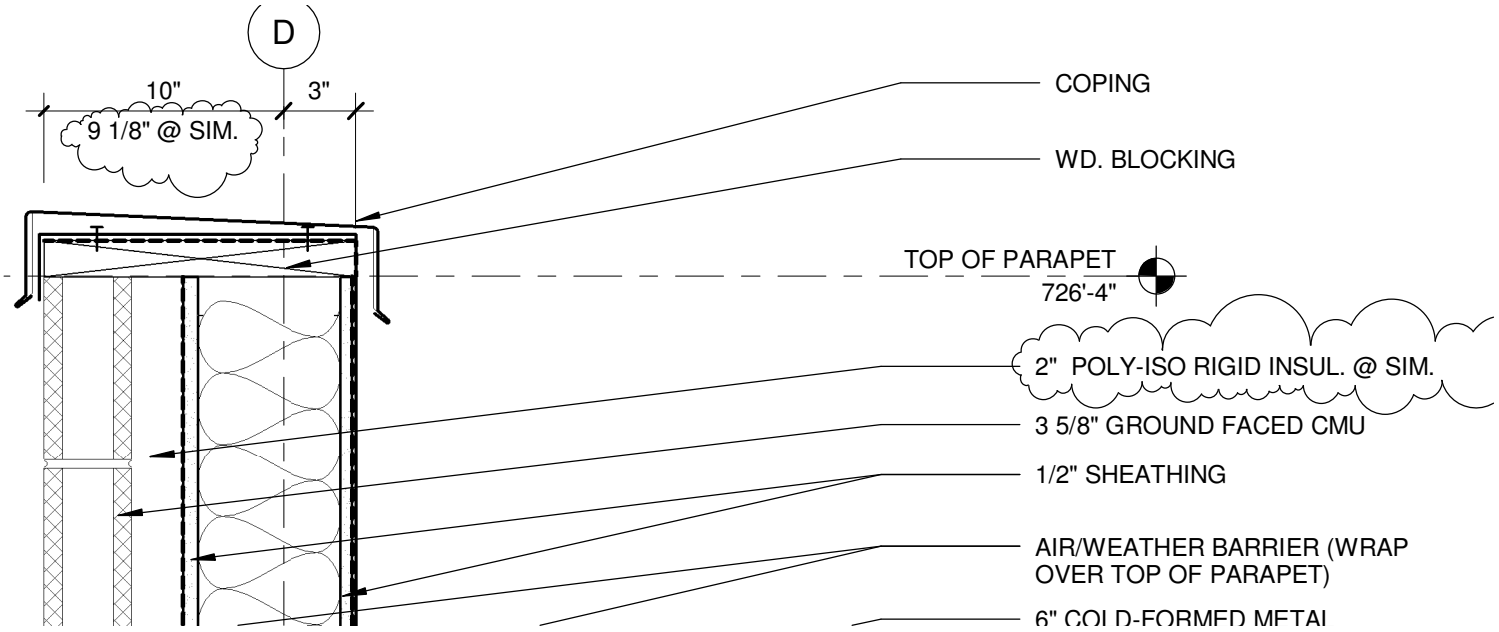

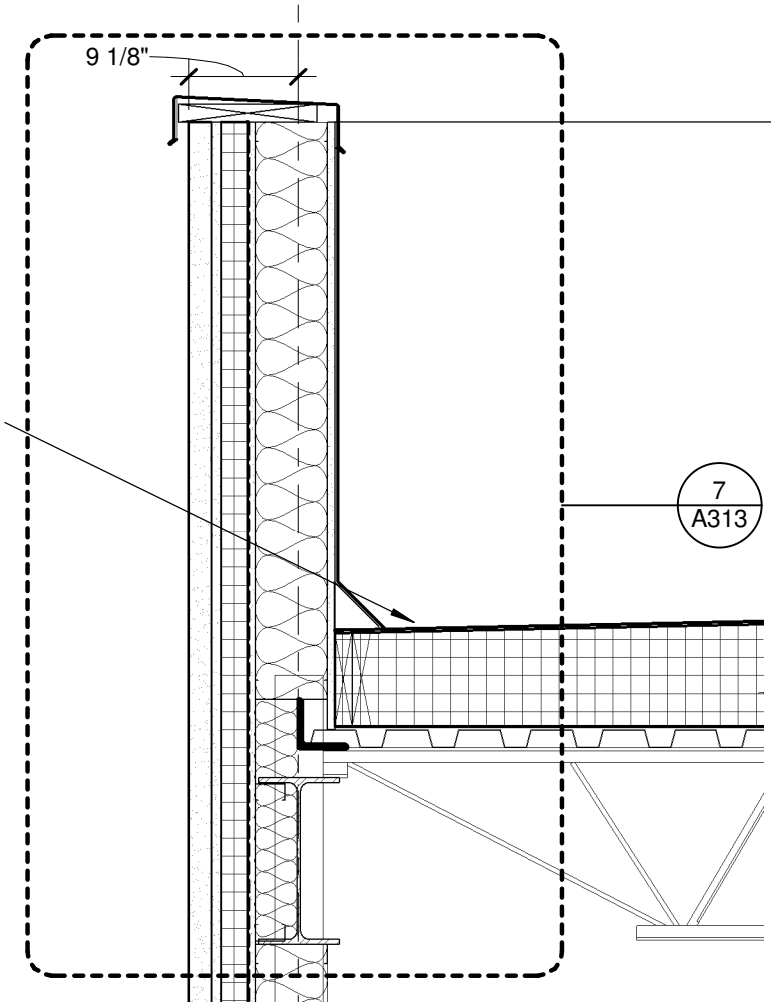

ROOF DETAIL

1 1/2" = 1'-0"

7

REF: 2/311

TREANOR ARCHITECTS

DRAWING REFERENCE: A313

PROJECT NO: 11088	VIRGINIA A&E, PLLC 1115 VISTA PARK DRIVE FOREST, VA 24551 PHONE: (434) 316-6001	LYNCHBURG JUVENILE SERVICES GROUP HOME		Full Scale Verification 0" 1"
DATE: 03/05/2015	Virginia A&E	CITY PROJECT NO: B0158 ENGINEERING PROJECT NO: 10043-BG		Drawing No.:
REV:		1401 FLORIDA AVENUE LYNCHBURG, VIRGINIA		ASD 11