SWITCHBOARD REPLACEMENT
HERITAGE ELEMENTARY SCHOOL

LYNCHBURG CITY SCHOOLS

IFB 2016-022

SIMMONS, ROCKECHARLIE & PRINCE INC.
Consulting Mechanical and Electrical Engineers
8416 Glazebrook Avenue
Richmond, Virginia 23228
Phone: 804-262-7323 Fax: 804-262-0021

LIST OF DRAWINGS

CS COVER SHEET

E1 HERITAGE ELEMENTARY SCHOOL – DEMOLITION PLAN, RISER AND NOTES
E2 HERITAGE ELEMENTARY SCHOOL – NEW WORK PLAN, RISER, SCHEDULES AND NOTES

COMMONWEALTH OF VIRGINIA
DINESH K. NARANG
Lic. No. 38271
PROFESSIONAL ENGINEER

SIMMONS, ROCKECHARLIE AND PRINCE, INC.

CONSULTING MECHANICAL AND ELECTRICAL ENGINEERS

8416 GLAZEBROOK AVENUE
RICHMOND, VA 23228
PHONE: (804) 262-7323
FAX: (804) 262-0021
WebSite: www.srpeng.com

COPYRIGHT © SIMMONS, ROCKECHARLIE AND PRINCE INC. – ALL RIGHTS RESERVED

THIS DRAWING MAY NOT BE USED IN ANY MANNER NOR REPRODUCED IN ANY FORM WITHOUT PRIOR WRITTEN CONSENT FROM SIMMONS, ROCKECHARLIE AND PRINCE INC.

JOB NAME:
HERITAGE ELEMENTARY SCHOOL SWITCHBOARD REPLACEMENT

501 LEESVILLE ROAD
LYNCHBURG, VA
24502

PROJECT #YS535

DRAWING TITLE:
COVER SHEET

REVISIONS:

NO.	DATE:	DESCRIPTION

DRAWN BY: PW
CHECKED BY: DN
COMM. NO. 15048
DATE 09-15-15

SHEET NO.
CS

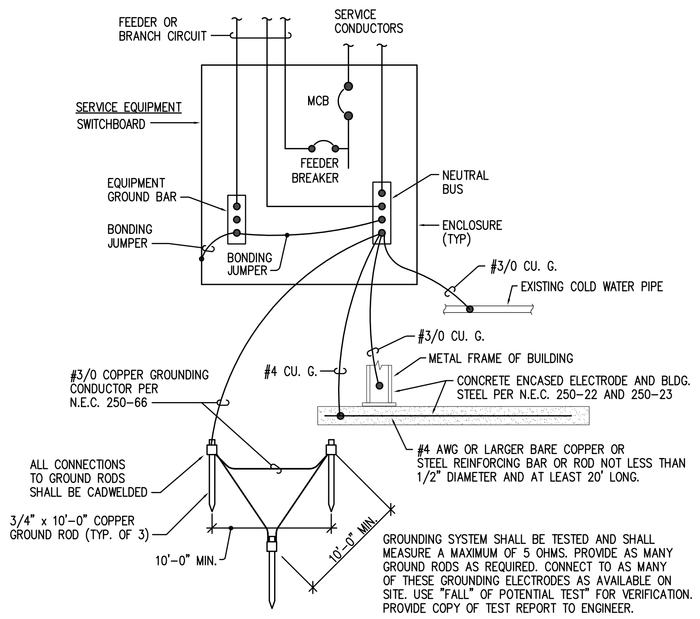

GROUNDING ELECTRODE CONDUCTOR DETAIL

NOT TO SCALE

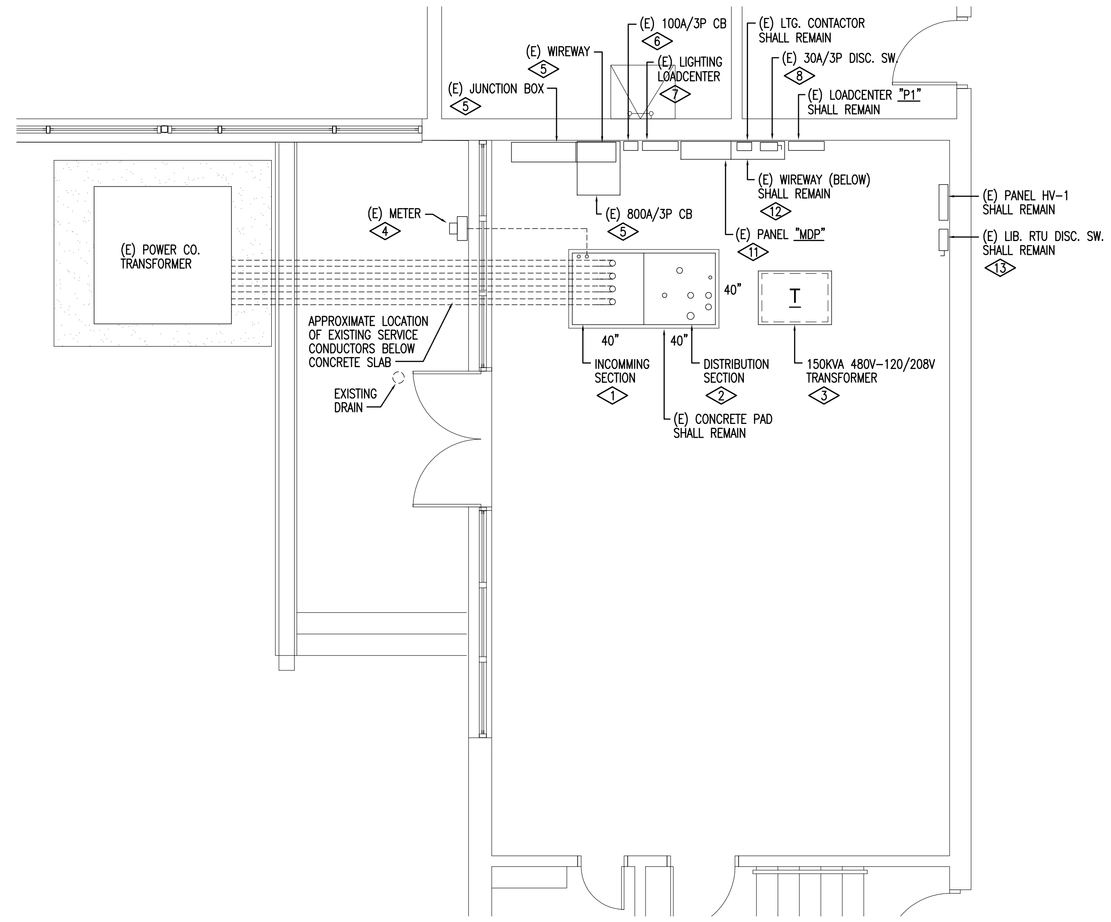

PARTIAL FLOOR PLAN - ELECTRICAL DEMOLITION

SCALE : 1/4" = 1'-0"

GENERAL NOTE:

1. CONTRACTOR SHALL TRACE ALL BRANCH CIRCUITS AND FEEDERS BEFORE STARTING WORK AND MARK EXISTING LOADS AND SPARE BREAKERS. CONTRACTOR SHALL REMOVE ABANDONED WIRE AND RECONNECT ONLY ACTIVE CIRCUITS. ALL EXISTING LOADS SHALL FUNCTION AS BEFORE CONSTRUCTION, AFTER COMPLETION OF THE PROJECT.

DEMOLITION NOTES

1. DISCONNECT SERVICE ENTRANCE CONDUCTORS FROM SWITCHBOARD "MP". EXISTING SWITCHBOARD IS TO BE REPLACED WITH NEW CONTRACTOR SHALL COORDINATE INTERRUPTION OF SERVICE WITH OWNER AND POWER COMPANY. OWNER WILL PAY POWER COMPANY CHARGE FOR THIS WORK. SEE NEW WORK PLAN AND NOTES ON DRAWING E2. CUT EXISTING SERVICE CONDUITS FLUSH WITH FLOOR AND CAP.
2. DISCONNECT ALL LOAD SIDE WIRING FROM THE CIRCUIT BREAKERS IN THE SWITCHBOARD AND RETAIN FOR REUSE. PROVIDE NEW BREAKERS TO MATCH EXISTING SIZES. SEE NEW WORK NOTES.
3. DISCONNECT AND REMOVE EXISTING 150KVA STEP DOWN TRANSFORMER AND PRIMARY AND SECONDARY FEEDERS. REMOVE EXISTING CONCRETE PAD AND FINISH FLOOR TO MATCH SURROUNDING SURFACE.
4. DISCONNECT AND REMOVE EXISTING CONDUIT AND WIRING TO EXISTING POWER COMPANY METER. RETAIN METER FOR REUSE.
5. REMOVE EXISTING JUNCTION BOX. 800A 3-POLE CIRCUIT BREAKER AND WIREWAYS ABOVE AND BELOW BREAKER. REMOVE ABANDONED CONDUIT TO FLUSH WITH SLAB AND CAP.
6. REMOVE EXISTING 100A 3-POLE CIRCUIT BREAKER AND FEEDER BACK TO SOURCE. A NEW BREAKER WILL BE PROVIDED IN THE NEW PANELBOARD FOR THE EXISTING LOAD. RETAIN LOAD SIDE WIRING FOR RE-CONNECTION.
7. DISCONNECT (8) EXISTING LIGHTING CIRCUITS FROM EXISTING LOADCENTER. RETAIN EXISTING CIRCUITS FOR REUSE. DISCONNECT AND REMOVE EXISTING LOADCENTER AND FEEDER BACK TO SOURCE. SEE NEW WORK NOTES.
8. REMOVE EXISTING DISCONNECT SWITCH PREVIOUSLY SERVING AIR COMPRESSOR THAT IS NO LONGER IN USE. REMOVE LOAD SIDE WIRING AND CONDUIT BACK TO SOURCE.
9. DISCONNECT EXISTING CIRCUITS AND FEEDERS FROM SWITCHBOARD "MP" AND RETAIN FOR REUSE. SEE NEW WORK NOTES.
10. DISCONNECT AND REMOVE EXISTING GROUNDING CONDUCTOR. A NEW SERVICE GROUND WIL BE PROVIDED. SEE NEW WORK NOTES.
11. DISCONNECT AND REMOVE EXISTING FEEDER SERVING PANELBOARD "MDP" AND PANELBOARD "MDP". RETAIN EXISTING BRANCH CIRCUITS FOR RECONNECTION. A NEW PANELBOARD "MDP" WILL BE PROVIDED. SEE NEW WORK NOTES ON DRAWING E2.
12. EXISTING CIRCUITS FROM PANEL "MDP" THRU EXISTING WIREWAY SHALL BE RETAINED FOR REUSE. EXISTING WIREWAY WILL BE REUSED AND CIRCUITS WILL BE RE-CONNECTED. SEE NEW WORK NOTES.
13. CIRCUIT FOR (E) LIB. RTU RUNS THRU MAIN SWITCHBOARD. REMOVE WIRING AND CONDUIT BACK TO SOURCE. A NEW CIRCUIT WILL BE PROVIDED FOR (E) LIB AHU FROM PANELBOARD HV-1. SEE NEW WORK NOTES.

ELECTRICAL LEGEND

SYMBOL	DESCRIPTION
UON	UNLESS OTHERWISE NOTED
(E)	EXISTING TO REMAIN U.O.N.
WP	WEATHERPROOF
TYP	TYPICAL
EC	EMPTY CONDUIT
1	NEW WORK TAG NOTE
1	DEMOLITION WORK TAG NOTE
	POINT OF CONNECTION OF NEW TO EXISTING
J	JUNCTION BOX SURFACE OR RECESSED AS REQUIRED
	NEW WIRING OR DEVICE
	EXISTING WIRING OR DEVICE
	EXISTING WIRING OR DEVICE TO BE DEMOLISHED
	BRANCH CIRCUIT: RUN EXPOSED IN UNFINISHED AREAS. CONCEALED IN CEILING OR WALL IN FINISHED AREAS.
	BRANCH CIRCUIT: CONCEALED IN FLOOR OR UNDERGROUND

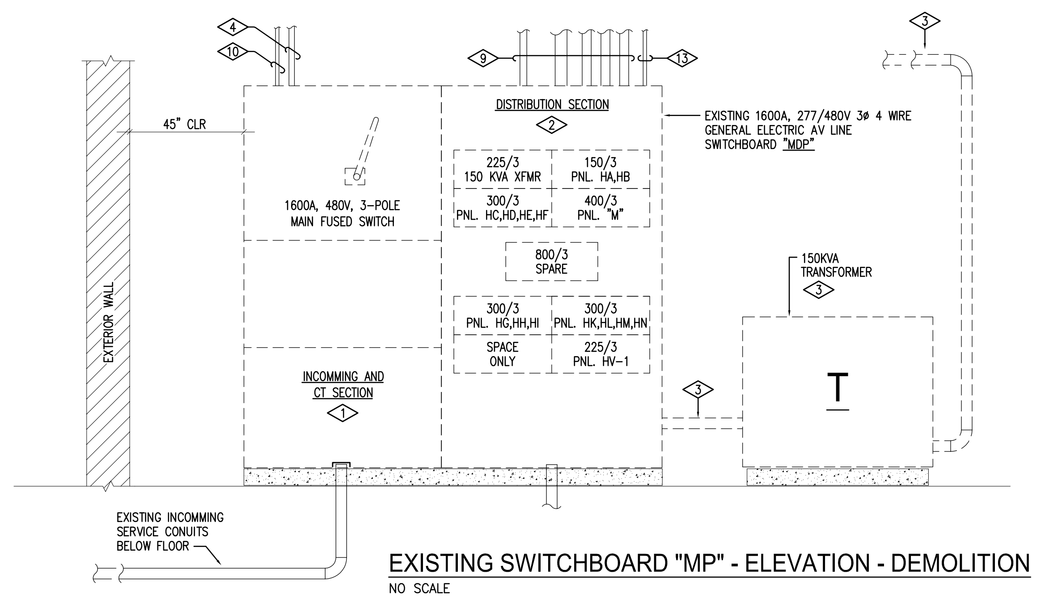

EXISTING SWITCHBOARD "MP" - ELEVATION - DEMOLITION

NO SCALE

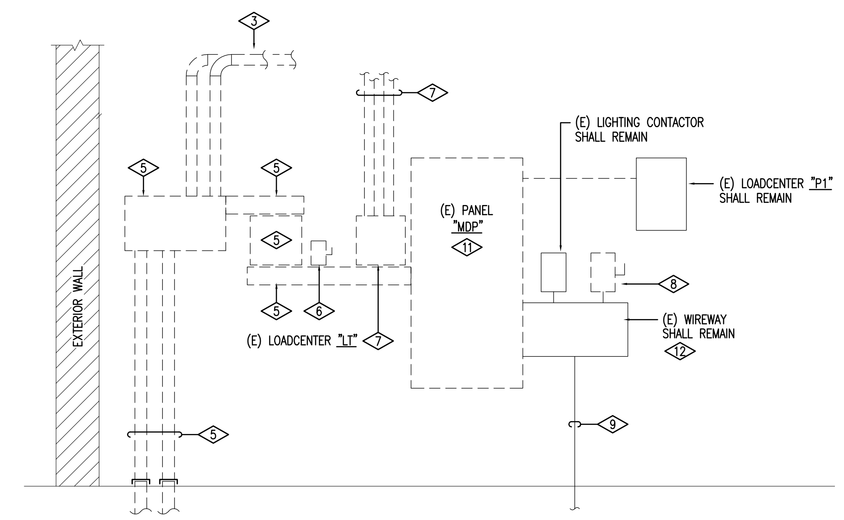

EXISTING PANELBOARD "MDP" - REAR WALL ELEVATION - DEMOLITION

NO SCALE

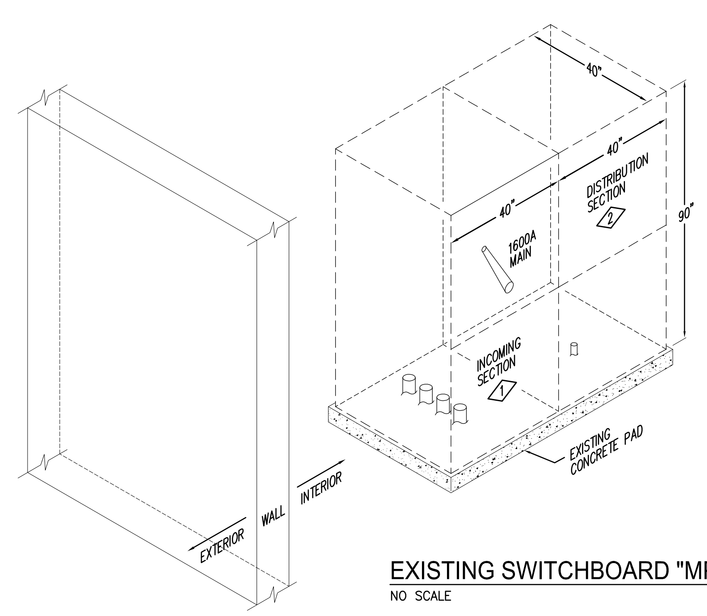

EXISTING SWITCHBOARD "MP" - ISOMETRIC ELEVATION - DEMOLITION

NO SCALE

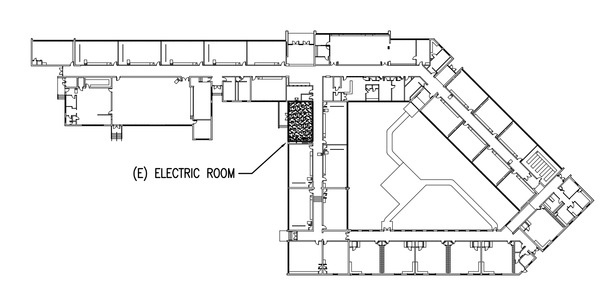

N KEY PLAN

NO SCALE

COMMONWEALTH OF VIRGINIA
DINESH K. NARANG
Lic. No. 38271
PROFESSIONAL ENGINEER

SIMMONS, ROCKECHARLIE AND PRINCE, INC.

CONSULTING MECHANICAL AND ELECTRICAL ENGINEERS

8416 GLAZEBROOK AVENUE
RICHMOND, VA 23228
PHONE: (804) 262-7323
FAX: (804) 262-0021
WebSite: www.srpeng.com

COPYRIGHT © SIMMONS, ROCKECHARLIE AND PRINCE INC. - ALL RIGHTS RESERVED

THIS DRAWING MAY NOT BE USED IN ANY MANNER NOR REPRODUCED IN ANY FORM WITHOUT PRIOR WRITTEN CONSENT FROM SIMMONS, ROCKECHARLIE AND PRINCE INC.

JOB NAME:

HERITAGE ELEMENTARY SCHOOL SWITCHBOARD REPLACEMENT

501 LEESVILLE ROAD
LYNCHBURG, VA
24502

PROJECT #YS535

DRAWING TITLE:

DEMOLITION PLAN, RISER AND NOTES

REVISIONS:

NO.	DATE:	DESCRIPTION

DRAWN BY:	CHECKED BY:
PMW	DN
COMM. NO.	DATE
15048	09-15-15

SHEET NO.

E1

OF: 2

PANELBOARD "MDP" SCHEDULE

120/208V, 3ø, 4W, SN, GND BUS, BOTTOM FEED, SUB FEED LUGS
800A M.C.B., 42K AIC FULLY RATED

WIRE SIZE	LOAD AMPS	LOAD SERVED	BKR. TRIP	POLE	CKT NO	PHASE A	PHASE B	PHASE C	CKT NO	POLE	BKR. TRIP	LOAD SERVED	LOAD AMPS	WIRE SIZE
#3	000	LOADCENTER "LT"	100	2	1				2	1	15	SPARE	000	#12
#3	000	–	–	–	3				4	1	15	SPARE	000	#12
#3	000	LOADCENTER "P1"	100	2	5				6	1	15	(E) LOAD	000	#12
#3	000	–	–	–	7				8	1	15	(E) LOAD	000	#12
#12	000	(E) LOAD	20	1	9				10	1	20	(E) LOAD	000	#12
#12	000	–	–	–	11				12	1	20	(E) LOAD	000	#12
#10	000	(E) LOAD	30	3	13				14	–	–	–	000	#3
#10	000	–	–	–	15				16	3	100	(E) LOAD	000	#3
#8	000	–	–	–	17				18	–	–	–	000	#3
#8	000	(E) LOAD	40	3	19				20	1	20	SPARE	000	–
#8	000	–	–	–	21				22	1	20	SPARE	000	–
#8	000	–	–	–	23				24	1	20	SPARE	000	–
#8	000	(E) LOAD	40	3	25				26	1	20	SPARE	000	–
#8	000	–	–	–	27				28	1	20	SPARE	000	–
–	000	SPARE	20	1	29				30	1	20	SPARE	000	–
–	000	SPARE	20	1	31				32	1	20	SPARE	000	–
–	000	SPARE	20	1	33				34	1	20	SPARE	000	–
–	000	SPARE	20	1	35				36	1	20	SPARE	000	–
–	000	SPARE	20	1	37				38	1	20	SPARE	000	–
–	000	SPARE	20	1	39				40	1	20	SPARE	000	–
–	000	SPARE	20	1	41				42	1	20	SPARE	000	–

NOTES: WIRE SIZES SHOWN ARE MINIMUM SIZES. MATCH EXISTING WIRING WHERE EXISTING CONDUCTORS ARE LARGER THAN SIZES INDICATED.

A– 0000
B– 0000
C– 0000

PANELBOARD "MDP" SCHEDULE

120/208V, 3ø, 4W, SN, GND BUS, BOTTOM FEED
800A M.L.O., 42K AIC FULLY RATED

WIRE SIZE	LOAD AMPS	LOAD SERVED	BKR. TRIP	POLE	CKT NO	PHASE A	PHASE B	PHASE C	CKT NO	POLE	BKR. TRIP	LOAD SERVED	LOAD AMPS	WIRE SIZE
#12	000	–	–	–	43				44	1	20	SPARE	000	–
#12	000	(E) LOAD	20	3	45				46	1	20	SPARE	000	–
#12	000	–	–	–	47				48	1	20	SPARE	000	–
#10	000	–	–	–	49				50	1	20	SPARE	000	–
#10	000	(E) LOAD	30	3	51				52	1	20	SPARE	000	–
#10	000	–	–	–	53				54	1	20	SPARE	000	–
#8	000	–	–	–	55				56	–	–	–	000	#6
#8	000	(E) LOAD	50	3	57				58	3	60	(E) LTG CONTACTOR	000	#6
#8	000	–	–	–	59				60	–	–	–	000	#6
#4	000	–	–	–	61				62	–	–	–	000	#8
#4	000	(E) LOAD	70	3	63				64	3	40	(E) LOAD	000	#8
#4	000	–	–	–	65				66	–	–	–	000	#8
#3	000	–	–	–	67				68	–	–	–	000	#8
#3	000	(E) LOAD	125	3	69				70	3	50	(E) LOAD	000	#8
#3	000	–	–	–	71				72	–	–	–	000	#8
#1/0	000	–	–	–	73				74	–	–	–	000	#1/0
#1/0	000	(E) LOAD	150	3	75				76	3	150	(E) LOAD	000	#1/0
#1/0	000	–	–	–	77				78	–	–	–	000	#1/0
#250	000	–	–	–	79				80	–	–	–	0	#2/0
#250	000	(E) LOAD	250	3	81				82	3	175	(E) LOAD	0	#2/0
#250	000	–	–	–	83				84	–	–	–	0	#2/0

NOTES: WIRE SIZES SHOWN ARE MINIMUM SIZES. MATCH EXISTING WIRING WHERE EXISTING CONDUCTORS ARE LARGER THAN SIZES INDICATED.

A– 0
B– 0
C– 0

PANELBOARD "LT" SCHEDULE

120/208V, 1ø, 3W, SN, GND BUS
100A M.L.O., 22K AIC FULLY RATED

WIRE SIZE	LOAD AMPS	LOAD SERVED	BKR. TRIP	POLE	CKT NO	PHASE A	PHASE B	CKT NO	POLE	BKR. TRIP	LOAD SERVED	LOAD AMPS	WIRE SIZE
#12	000	(E) LIGHTING LOAD	20	1	1			2	1	20	(E) LIGHTING LOAD	000	#12
#12	000	(E) LIGHTING LOAD	20	1	3			4	1	20	(E) LIGHTING LOAD	000	#12
#12	000	(E) LIGHTING LOAD	20	1	5			6	1	20	(E) LIGHTING LOAD	000	#12
#12	000	(E) LIGHTING LOAD	20	1	7			8	1	20	(E) LIGHTING LOAD	000	#12
–	000	SPARE	20	1	9			10	1	20	SPARE	000	–
–	000	SPARE	20	1	11			12	1	20	SPARE	000	–
–	000	SPARE	20	1	13			14	1	20	SPARE	000	–
–	000	SPARE	20	1	15			16	1	20	SPARE	000	–
–	000	SPARE	20	1	17			18	1	20	SPARE	000	–
–	000	SPARE	20	1	19			20	1	20	SPARE	000	–
–	000	SPARE	20	1	21			22	1	20	SPARE	000	–
–	000	SPARE	20	1	23			24	1	20	SPARE	000	–
–	000	SPARE	20	1	25			26	1	20	SPARE	000	–
–	000	SPARE	20	1	27			28	1	20	SPARE	000	–
–	000	SPARE	20	1	29			30	1	20	SPARE	000	–
–	000	SPARE	20	1	31			32	1	20	SPARE	000	–
–	000	SPARE	20	1	33			34	1	20	SPARE	000	–
–	000	SPARE	20	1	35			36	1	20	SPARE	000	–
–	000	SPARE	20	1	37			38	1	20	SPARE	000	–
–	000	SPARE	20	1	39			40	1	20	SPARE	000	–
–	000	SPARE	20	1	41			42	1	20	SPARE	000	–

NOTES: WIRE SIZES SHOWN ARE MINIMUM SIZES. MATCH EXISTING WIRING WHERE EXISTING CONDUCTORS ARE LARGER THAN SIZES INDICATED.

A– 0000
B– 0000

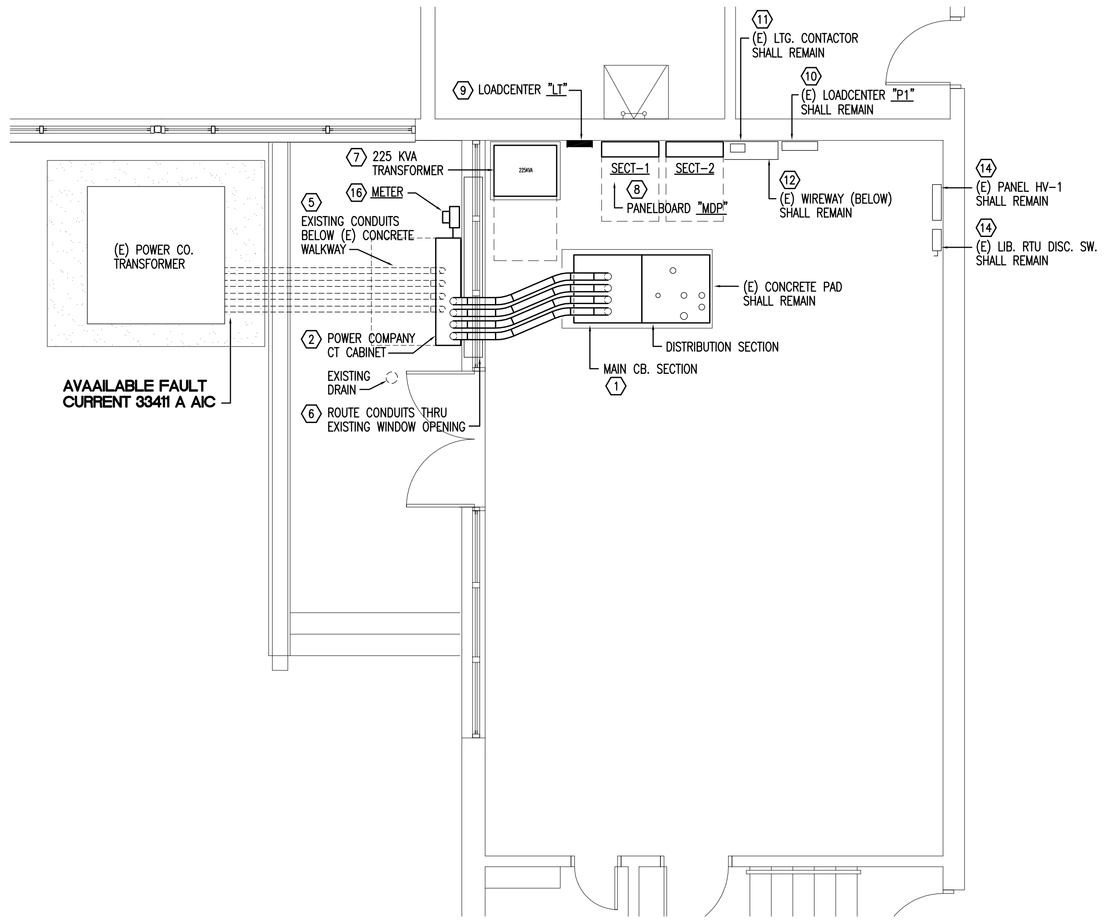

PARTIAL FLOOR PLAN - ELECTRICAL NEW WORK
SCALE : 1/4" = 1'–0"

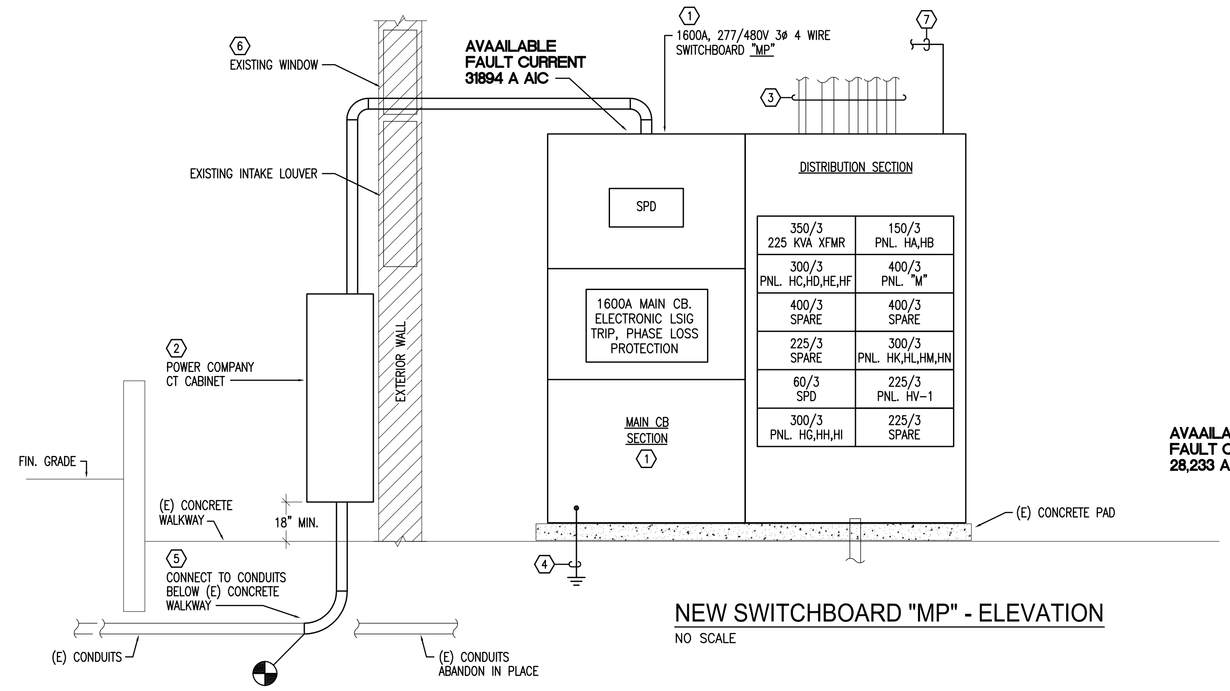

NEW SWITCHBOARD "MP" - ELEVATION
NO SCALE

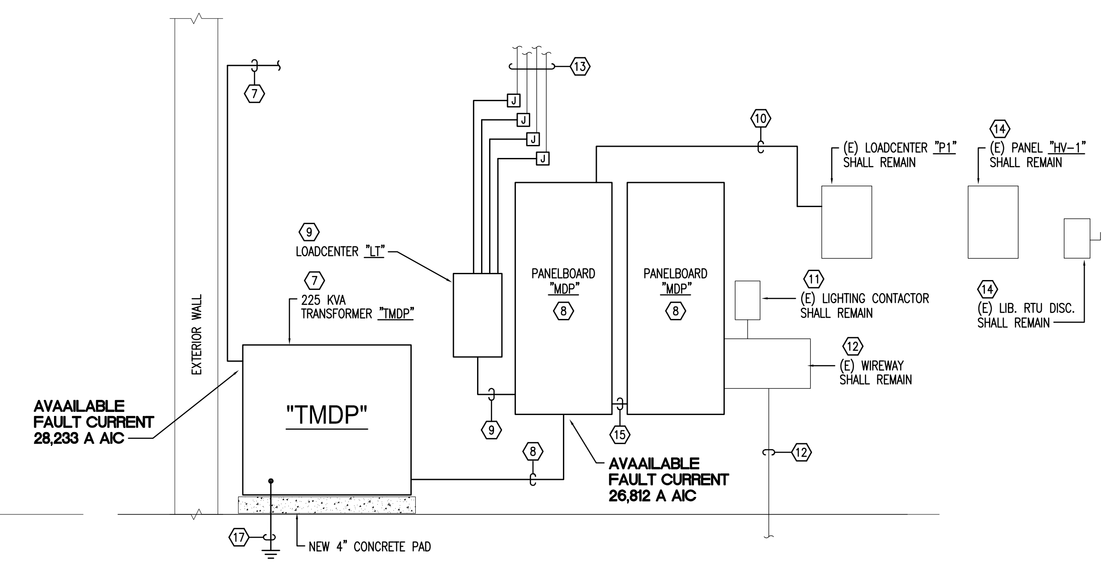

REAR WALL ELEVATION - NEW WORK
NO SCALE

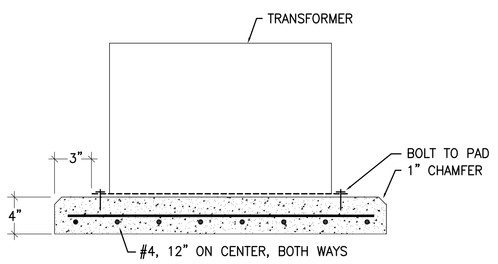

CONCRETE EQUIPMENT PAD DETAIL
NOT TO SCALE

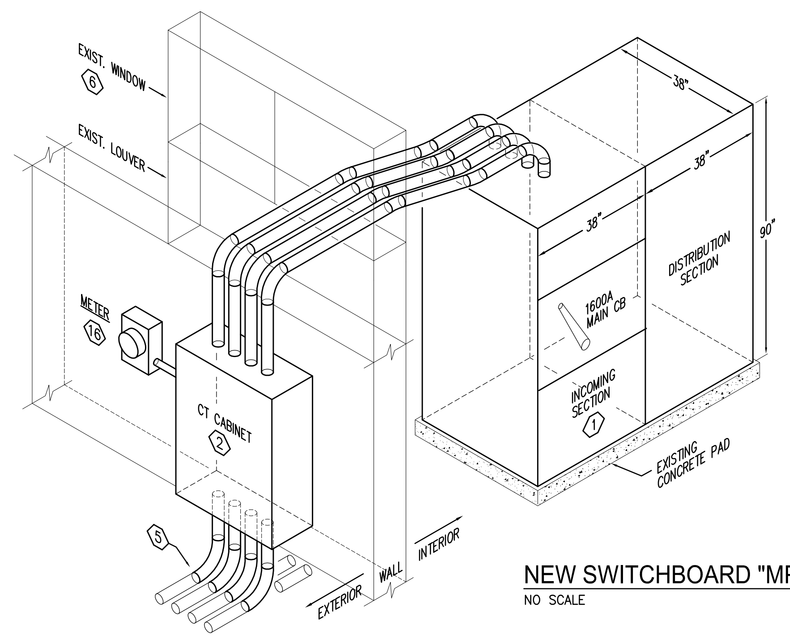

NEW SWITCHBOARD "MP" - ISOMETRIC ELEVATION
NO SCALE

GENERAL NOTES:

1. PROVIDE INFRA–RED TESTING OF ALL CIRCUIT BREAKERS AND CONNECTIONS 30 DAYS AFTER FINAL COMPLETION OF WORK. SEND TEST REPORT TO ENGINEER.

NEW WORK NOTES

(1) PROVIDE NEW 1600A, 277/480V, 3ø SERVICE ENTRANCE RATED SWITCHBOARD FULLY RATED AT 65K AIC. INSTALL IN PLACE OF EXISTING. CONNECT NEW SERVICE CONDUCTORS FROM CT CABINET ON EXTERIOR OF BUILDING TO NEW SWITCHBOARD. CIRCUIT BREAKERS IN THE NEW SWITCHBOARD SHALL BE ARRANGED SO THAT EXISTING BRANCH CIRCUIT WIRING MAY BE REUSED, UON. RECONNECT ALL BRANCH CIRCUITS. SEE NEW SWITCHBOARD ELEVATION FOR A SUGGESTED ARRANGEMENT OF CIRCUIT BREAKERS. DIMENSIONS OF SWITCHBOARD SECTIONS SHALL BE SUCH AS TO AVOID CONFLICT WITH CONDUITS STUBBED UP FROM CONCRETE. PROVIDE NEW GROUNDING – SEE SERVICE GROUNDING DETAIL ON DRAWING E1.

(2) PROVIDE NEW 1600A POWER COMPANY CT CABINET MOUNTED TO EXTERIOR WALL WHERE SHOWN. PROVIDE CONDUIT AND WIRE SIZED AS NOTED BETWEEN CT CABINET AND MAIN CB. SECTION.

(3) EXISTING FEEDERS MUST BE REUSED, UON. RECONNECT ALL EXISTING BRANCH CIRCUITS AND FEEDERS. MATCH AND EXTEND EXISTING WIRING AS REQUIRED.

(4) PROVIDE NEW SERVICE GROUNDING PER DETAIL ON DRAWING E1.

(5) PROVIDE (4) 4" CONDUITS AND CONNECT TO EXISTING CONDUITS BELOW GRADE AND NEW CT CABINET FOR NEW POWER COMPANY SERVICE CONDUCTORS. PATCH CONCRETE TO MATCH EXISTING. AVOID EXISTING AREA DRAIN. MAINTAIN EXISTING CONCRETE SLOPE TO DRAIN. COORDINATE ALL REQUIREMENTS WITH POWER COMPANY.

(6) PROVIDE (4) SETS:4#600MCM CU. 4"C. FROM NEW CT CABINET TO NEW SWITCHBOARD. ROUTE CONDUITS THRU EXISTING WINDOW OPENING. PROVIDE 16 GA. SHEET ALUMINUM PANEL WITH OPENINGS IN PLACE OF GLASS. SEAL CONDUIT PENETRATIONS AND ALUMINUM PANEL TO PREVENT ENTRY OF WATER. ROUTE CONDUITS TO AVOID WINDOW MULLION.

(7) PROVIDE NEW 225KVA 480–120/208V DRY TYPE TRANSFORMER. MOUNT ON CONCRETE PAD WHERE SHOWN ON THE PLAN. CONNECT TRANSFORMER PRIMARY TO NEW 350A/3–POLE BREAKER IN SWITCHBOARD "MP" WITH 3#500MCM,1#3G.,3"C. SEE CONCRETE PAD DETAIL ON THIS DRAWING.

(8) PROVIDE NEW 2–SECTION PANELBOARD "MDP". SEE PANELBOARD "MDP" SECTION 1 AND 2 SCHEDULES ON THIS DRAWING. CONNECT PANELBOARD "MDP" TO NEW TRANSFORMER "TMDP" SECONDARY WITH (2)SETS: 4#500MCM,1#1/0G.,3–1/2"C.

(9) PROVIDE NEW LOADCENTER "LT". SEE LOADCENTER "LT" SCHEDULE ON THIS DRAWING. CONNECT LOADCENTER LT" TO NEW 100A/2–POLE BREAKER IN PANELBOARD "MDP" SECTION 1 WITH 3#3,1#8G.,1–1/4"C. SEE PANELBOARD "MDP" SCHEDULE ON THIS DRAWING.

(10) CONNECT EXISTING LOADCENTER "P1" TO NEW 100A/2–POLE BREAKER IN PANELBOARD "MDP" SECTION 1 WITH 3#3,1#8G.,1–1/4"C. SEE PANELBOARD "MDP" SCHEDULE ON THIS DRAWING.

(11) CONNECT EXISTING LIGHTING CONTACTOR TO NEW 60A, 3–POLE BREAKER IN PANELBOARD "MDP" SECTION 2 WITH 3#6,1#10G.,1"C. SEE PANELBOARD "MDP" SCHEDULE ON THIS DRAWING. EXISTING CONTACTOR SHALL CONTROL SAME 3 PH. CIRCUIT AS BEFORE SWITCHBOARD REPLACEMENT. RECONNECT TO LOAD SIDE WIRING.

(12) CONNECT EXISTING CIRCUITS IN WIREWAY TO NEW BREAKERS IN NEW PANELBOARD "MDP". MATCH AND EXTEND EXISTING WIRING AS REQUIRED AND CONNECT. SEE PANELBOARD "MDP" SCHEDULE ON THIS DRAWING.

(13) CONNECT EXISTING LIGHTING CIRCUITS TO NEW LOADCENTER "LT" MATCH AND EXTEND EXISTING WIRING AS REQUIRED AND CONNECT.

(14) EXISTING PANELBOARD "HV–1" IS 225A, 3PH 277/480V GE A SERIES. REMOVE (3) EXISTING SPARE 20A, 1–POLE BREAKERS AND PROVIDE (1) 50A, 3–POLE BREAKER IN PLACE OF BREAKERS REMOVED. CONNECT EXISTING LIBRARY ROOFTOP UNIT DISCONNECT SWITCH TO NEW BREAKER WITH 3#8,1#10G.,3/4"C.

(15) (2)SETS: 4#500MCM,1#1/0G.,3"C.

(16) POWER COMPANY METER. PROVIDE 1–1/4" EC. FROM CT CABINET TO METER FOR WIRING BY POWER COMPANY.

(17) #2/0 CU. FROM XFMR TO BUILDING STEEL

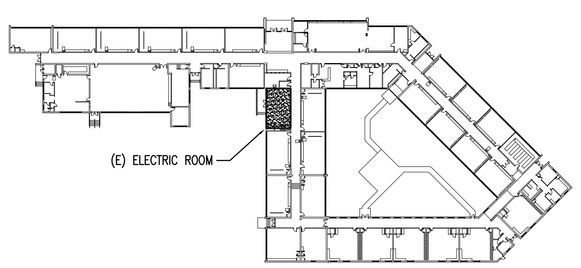

KEY PLAN
NO SCALE

COMMONWEALTH OF VIRGINIA
DINESH K. NARANG
Lic. No. 38271
PROFESSIONAL ENGINEER

SRP

SIMMONS, ROCKECHARLIE AND PRINCE, INC.

CONSULTING MECHANICAL AND ELECTRICAL ENGINEERS

8416 GLAZEBROOK AVENUE
RICHMOND, VA 23228
PHONE: (804) 262–7323
FAX: (804) 262–0021
WebSite: www.srpeng.com

COPYRIGHT © SIMMONS, ROCKECHARLIE AND PRINCE INC. – ALL RIGHTS RESERVED

THIS DRAWING MAY NOT BE USED IN ANY MANNER NOR REPRODUCED IN ANY FORM WITHOUT PRIOR WRITTEN CONSENT FROM SIMMONS, ROCKECHARLIE AND PRINCE INC.

JOB NAME:

HERITAGE ELEMENTARY SCHOOL SWITCHBOARD REPLACEMENT

501 LEESVILLE ROAD
LYNCHBURG, VA
24502

PROJECT #YS535

DRAWING TITLE:

NEW WORK PLAN, RISER, SCHEDULES AND NOTES

REVISIONS:

NO.	DATE:	DESCRIPTION

DRAWN BY:	CHECKED BY:
PMW	DN

COMM. NO.	DATE
15048	09–15–15

SHEET NO.

E2
OF: 2