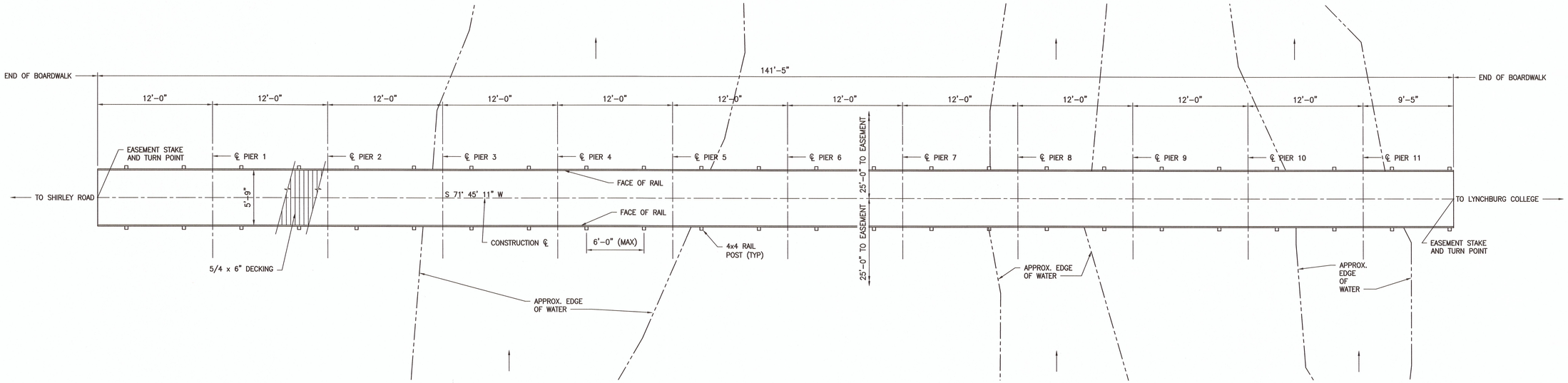

NORTH

PLAN

SCALE: 3/16"=1'-0"

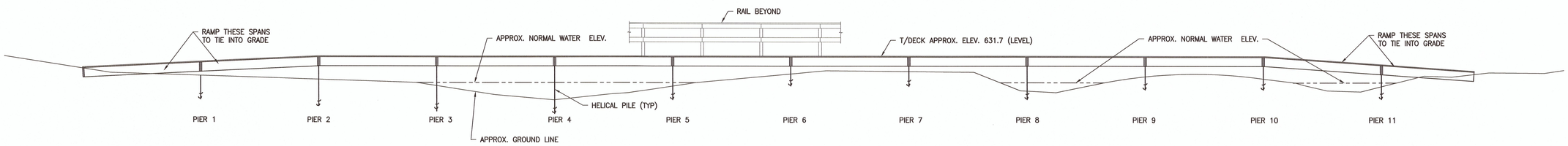

PROFILE ALONG CONSTRUCTION ℄

SCALE: 3/16"=1'-0"

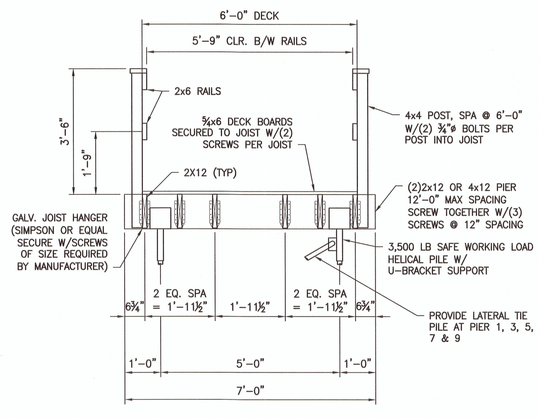

TYPICAL SECTION

SCALE: 1/2"=1'-0"

STRUCTURAL NOTES

1. GENERAL REQUIREMENTS

1.1. THE STRUCTURE HAS BEEN DESIGNED TO RESIST DESIGN LOADS ONLY AS A COMPLETED STRUCTURE. APPLICATION OF CONSTRUCTION LOADS TO THE PARTIALLY COMPLETED STRUCTURE SHALL BE CONSIDERED BY THE CONTRACTOR AND INCLUDED IN THE DESIGN OF SHORING, BRACING, FORMWORK, AND OTHER SUPPORTING ELEMENTS PROVIDED FOR CONSTRUCTION OF THE STRUCTURE.

1.2. CONTRACTOR SHALL CHECK AND VERIFY ALL DIMENSIONS, REPORTING ANY DISCREPANCIES TO THE ENGINEER BEFORE PROCEEDING WITH THE WORK. SHOP DRAWINGS SHALL REFLECT FIELD VERIFIED DIMENSIONS BEFORE SUBMITTING TO THE ENGINEER.

1.3. THE STRUCTURE HAS BEEN DESIGNED TO BE CONSTRUCTED FROM ONE END TO OTHER BY SPAN WITHOUT THE NEED FOR A TEMPORARY CAUSEWAY. THE BOARDWALK STRUCTURE CAN SUPPORT A MINI-EXCAVATOR TO INSTALL THE HELICAL PILES. BASIS OF DESIGN USED A KOMATSU MINI EXCAVATOR, OTHER EQUIPMENT OF SIMILAR WEIGHT AND DIMENSIONS CAN ALSO BE SUPPORTED. IT IS THE CONTRACTORS RESPONSIBILITY TO PROVIDE CRIBBING ABOVE DECK AND BELOW EQUIPMENT TRACKS TO UNIFORMLY SPREAD LOAD AND PROTECT PERMANENT CONSTRUCTION FEATURES.

1.4. CONSTRUCTION CENTERLINE CORRESPONDS TO CREEKSIDE TRAIL EXTENSION EASEMENT DATED 4-11-2014.

1.5. APPROXIMATE ELEVATIONS ARE BASED ON BASE SURVEY FROM RBA GROUP TRAIL ALIGNMENT STUDY DATED 12-4-2008.

2. APPLICABLE CODES AND STANDARDS

2.1. "VIRGINIA UNIFORM STATEWIDE BUILDING CODE" (IBC 2012).
2.2. AISC, "MANUAL OF STEEL CONSTRUCTION – ALLOWABLE STRESS DESIGN".
2.3. STRUCTURAL WELDING CODE, AWS D1.1.
2.4. ANSI/AWC NDS-2012 "NATIONAL DESIGN SPECIFICATION FOR WOOD CONSTRUCTION".

3. DESIGN LOADS

3.1. LIVE LOAD
DECK — 60 PSF

3.2. CONSTRUCTION LOAD
KOMATSU PC27MR-3 MINI EXCAVATOR — 6,500 LBS

4. DRILLED HELICAL PILES

DRILLED HELICAL PILES SHALL BE CHANCE HELICAL PILES, OR APPROVED EQUAL, AND DESIGNED BY A PROFESSIONAL ENGINEER HOLDING A LICENSE IN THE COMMONWEALTH OF VIRGINIA. THE PILES SHALL BE INSTALLED BY AN INSTALLER CERTIFIED BY THE HELICAL PILE MANUFACTURER. THE PILES SHALL BE DESIGNED TO SUSTAIN A SAFE WORKING CAPACITY OF 3,500 LBS PER PILE. LATERAL TIE PILES SHALL HAVE A MAXIMUM SAFE WORKING CAPACITY OF 2,000 LBS. ALL PILES SHALL BE POSITIVELY CONNECTED TO THE BRACKETS AND TIMBER FRAMING WITH AN UPLIFT CAPACITY TO PREVENT BUOYANCY UPLIFT DURING HIGH WATER EVENTS.

5. MATERIALS

5.1. STRUCTURAL AND MISCELLANEOUS STEEL

STEEL PLATE, ANGLE & CHANNEL	ASTM A36
STRUCTURAL BOLTS	ASTM A325
WELDING ELECTRODES	E70XX

5.2. TIMBER
ALL STRUCTURAL TIMBER SHALL BE SPRUCE-PINE-FIR NO. 2, OR BETTER, AND SHALL BE PRESSURE TREATED FOR EXTERIOR USE.

PROVIDE BLOCKING BETWEEN JOIST AT MID SPAN. PROVIDE BLOCKING BETWEEN EXTERIOR & INTERIOR JOIST W/IN 1'-0" OF RAIL POSTS.

FOR CONNECTIONS NOT SHOWN REFER TO IBC TABLE 2304.9.1.

5.3. SCREWS SHALL BE COATED OR GALVANIZED AND BE APPROVED FOR USE WITH PRESSURE TREATED LUMBER.

6. SUBMITTALS

6.1. SIGNED AND SEALED HELICAL PILE DESIGN CALCULATIONS SHALL BE SUBMITTED TO ENGINEER FOR REVIEW AND APPROVAL 30 DAYS BEFORE INSTALLATION IS SCHEDULED.

COPIES OF THE ORIGINAL DOCUMENTS AS DESIGNED BY THE PROFESSIONAL HAVE BEEN RETAINED BY THE PROFESSIONAL AND THE PROFESSIONAL CANNOT ASSUME RESPONSIBILITY FOR ANY SUBSEQUENT CHANGES TO THE REPRODUCIBLE ORIGINAL DOCUMENTS, WHICH ARE NOT MADE BY THE PROFESSIONAL OR THOSE WORKING UNDER HIS DIRECT CONTROL AND PERSONAL SUPERVISION.

REVISIONS:

COMMONWEALTH OF VIRGINIA
JEREMY D. LUCAS
Lic. No. 44991
20 FEBRUARY 2016
PROFESSIONAL ENGINEER

MASTER
ENGINEERS & DESIGNERS
904 Lakeside Drive, Lynchburg, VA 24501
434-846-1350 Fax: 434-846-1351

BOARDWALK AT COLLEGE LAKE
LYNCHBURG PARKS & REC
LYNCHBURG, VA

STRUCTURAL PLANS AND DETAILS

DATE ISSUED:	2-10-2016
SCALE:	AS NOTED
JOB. NO.	262-224
DESIGNED:	JLL
DRAWN:	JLL
CHECKED:	JLL
APPROVED:	JLL

DRAWING NO. S1
SHEET OF
REVISION