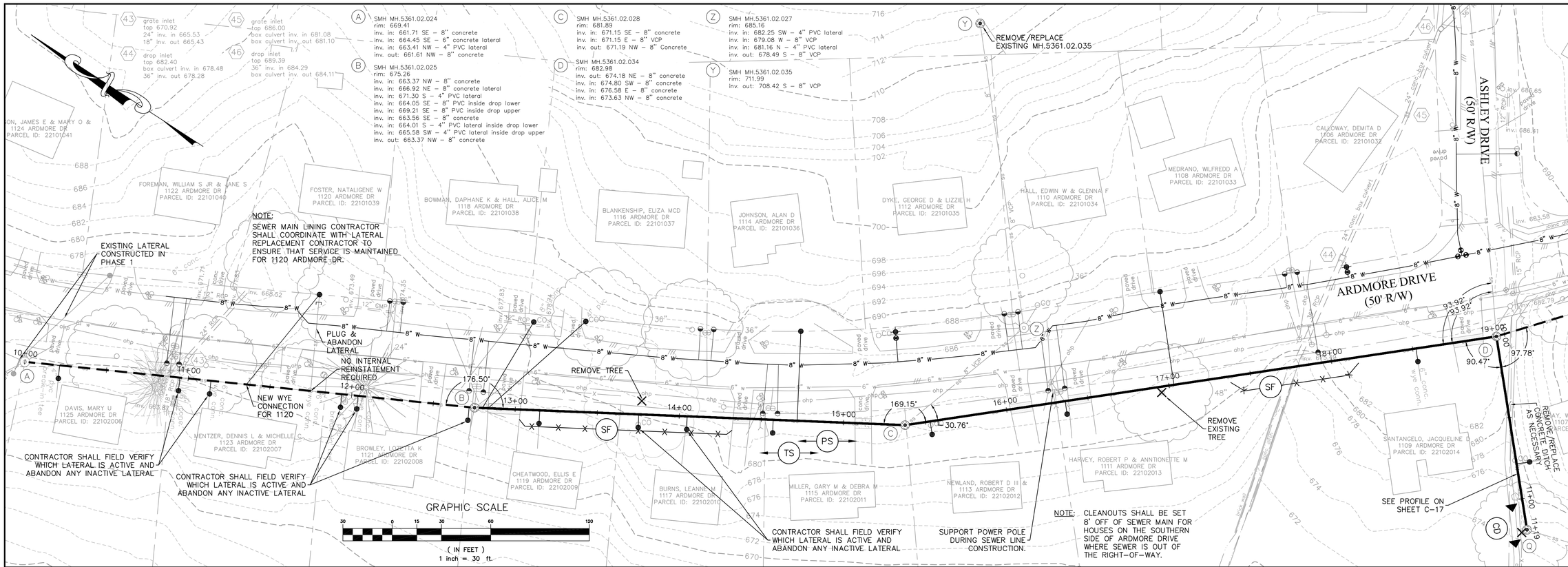

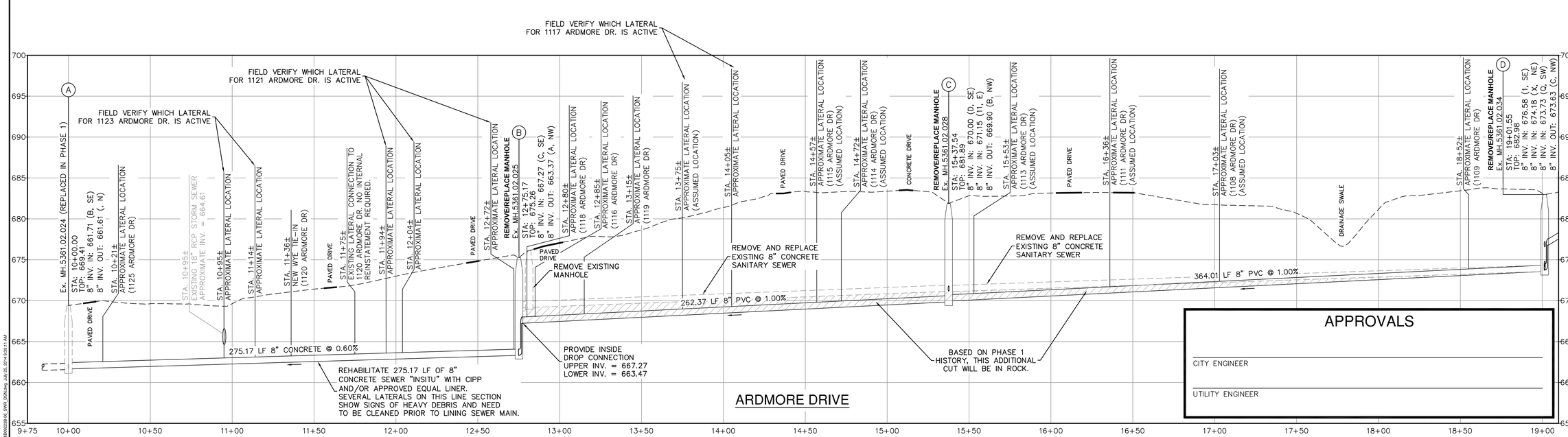

SEWER PROFILE
SCALE: H: 1"=30', V: 1"=6'

APPROVALS

CITY ENGINEER

UTILITY ENGINEER

COMMONWEALTH OF VIRGINIA
SCOTT A. SCHILLER
Lic. No. 048071
7/25/14
PROFESSIONAL ENGINEER

Draper Aden Associates
Engineering • Surveying • Environmental Services
Richmond, VA
Charlottesville, VA
Hampton Roads, VA
Blacksburg, VA
2905 South Main Street
Blacksburg, VA 24060
540-552-0444 Fax: 540-552-0291
www.daa.com

SEWER PLAN AND PROFILE - ARDMORE DRIVE
BLUE RIDGE FARMS WATER, SANITARY, & STORM SEWER IMPROVEMENTS - PHASE 2

LYNCHBURG, VIRGINIA

REVISIONS

DESIGNED BY:	LMR/BMC
DRAWN BY:	BMC
CHECKED BY:	JST
SCALE:	1"=30'
DATE:	07/25/2014
PROJECT NUMBER:	B09223B-06

C-13

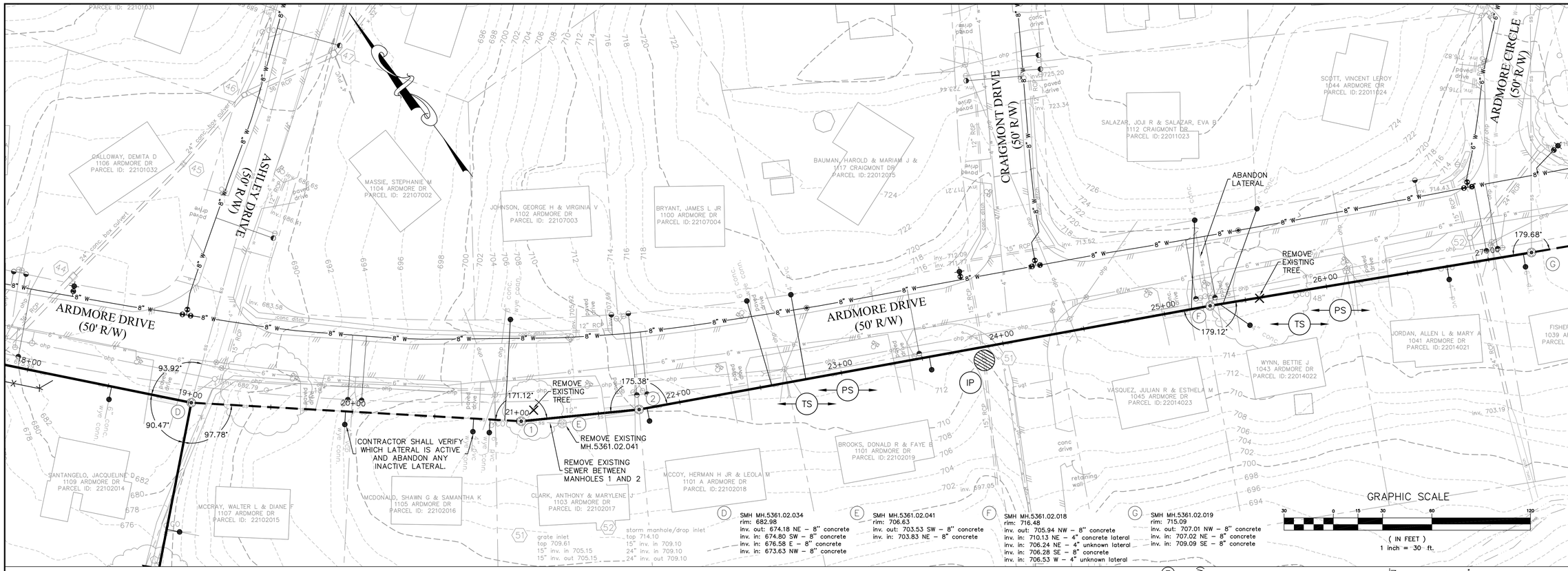

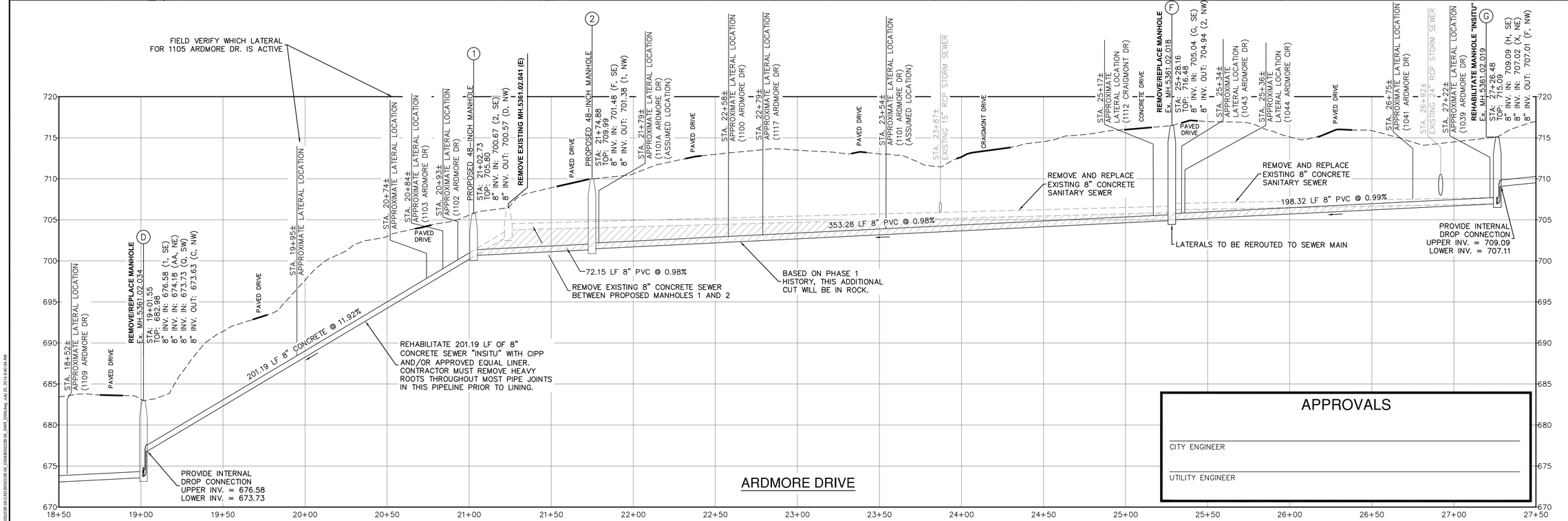

APPROVALS

CITY ENGINEER

UTILITY ENGINEER

SEWER PROFILE
SCALE: H: 1"=30', V: 1"=6'

COMMONWEALTH OF VIRGINIA
SCOTT A. SCHILLER
Lic. No. 043071
7/25/14
PROFESSIONAL ENGINEER

Draper Aden Associates
Engineering • Surveying • Environmental Services
Blacksburg, VA
2905 S. Main Street
Blacksburg, VA 24060
540-552-0444 Fax: 540-552-0291
www.daa.com
Richmond, VA
Charlottesville, VA
Hampton Roads, VA

SEWER PLAN AND PROFILE - ARDMORE DRIVE
BLUE RIDGE FARMS WATER, SANITARY, & STORM SEWER IMPROVEMENTS - PHASE 2

LYNCHBURG, VIRGINIA

REVISIONS

DESIGNED BY:	LMR/BMC
DRAWN BY:	BMC
CHECKED BY:	JST
SCALE:	1"=30'
DATE:	07/25/2014
PROJECT NUMBER:	B09223B-06

C-14

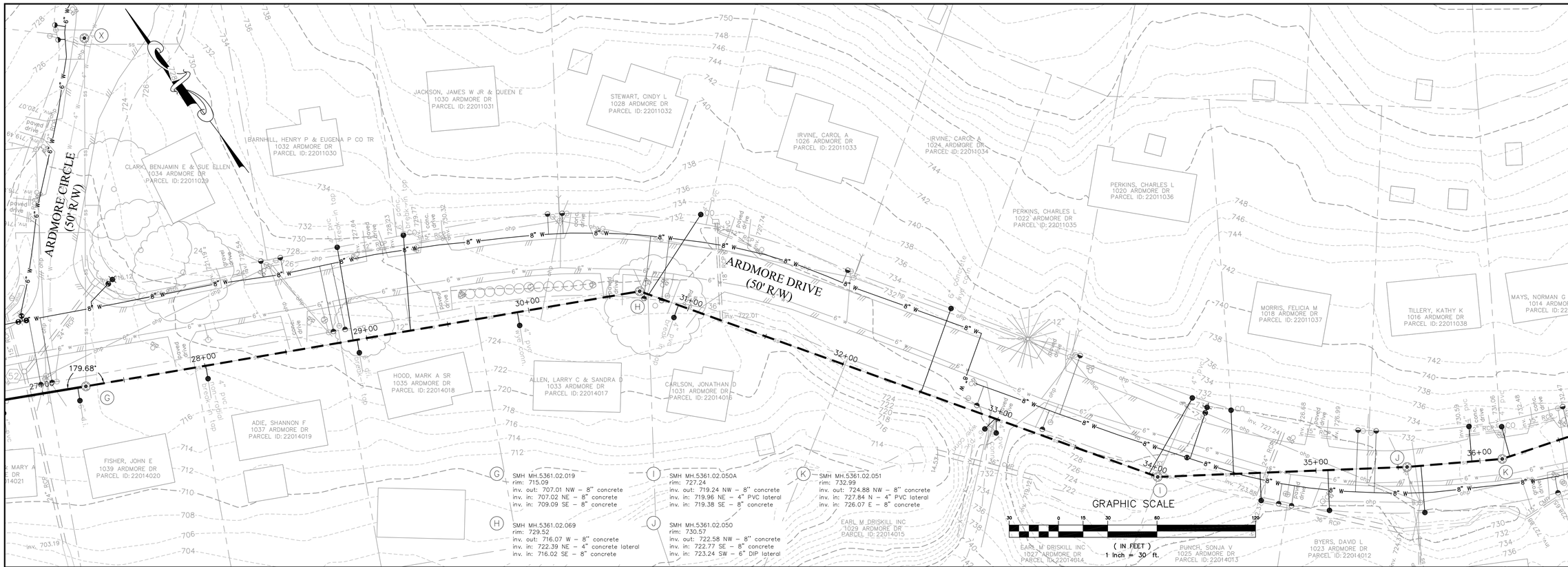

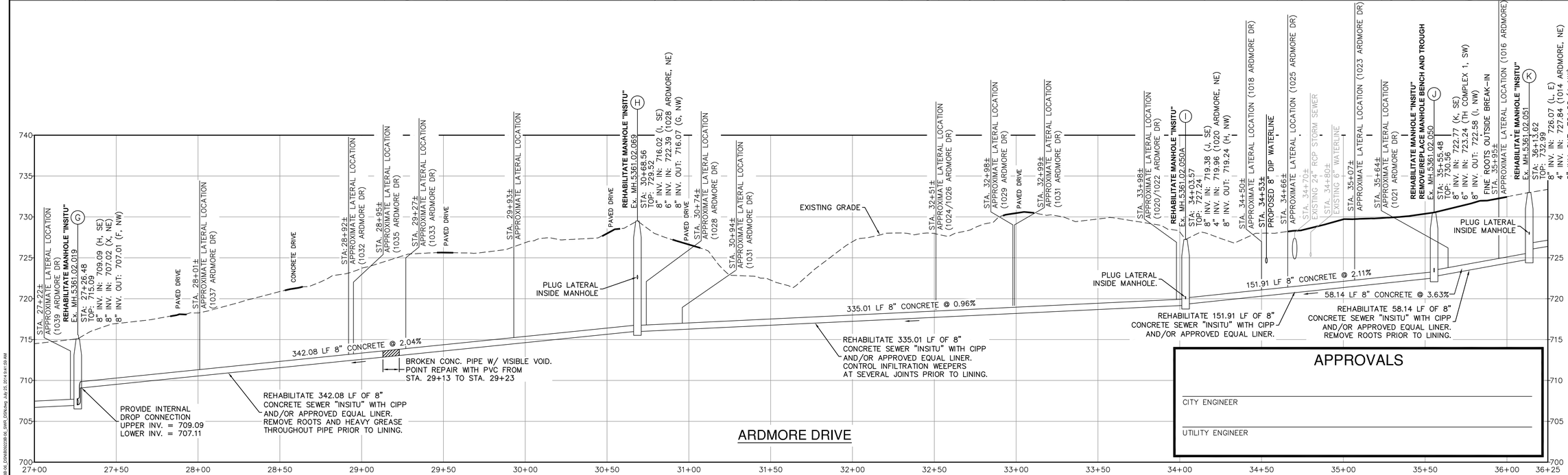

APPROVALS

CITY ENGINEER

UTILITY ENGINEER

SEWER PROFILE
SCALE: H: 1"=30', V: 1"=6'

COMMONWEALTH OF VIRGINIA
SCOTT A. SCHILLER
Lic. No. 048071
7/25/14
PROFESSIONAL ENGINEER

Draper Aden Associates
Engineering • Surveying • Environmental Services
Blacksburg, VA
2905 South Main Street
Blacksburg, VA 24060
540-552-0444 Fax: 540-552-0291
www.daa.com
Richmond, VA
Charlottesville, VA
Hampton Roads, VA

SEWER PLAN AND PROFILE - ARDMORE DRIVE
BLUE RIDGE FARMS WATER, SANITARY, & STORM SEWER IMPROVEMENTS - PHASE 2

LYNCHBURG, VIRGINIA

REVISIONS

DESIGNED BY:	LMR/BMC
DRAWN BY:	BMC
CHECKED BY:	
SCALE:	1"=30'
DATE:	07/25/2014
PROJECT NUMBER:	B09223B-06

C-15

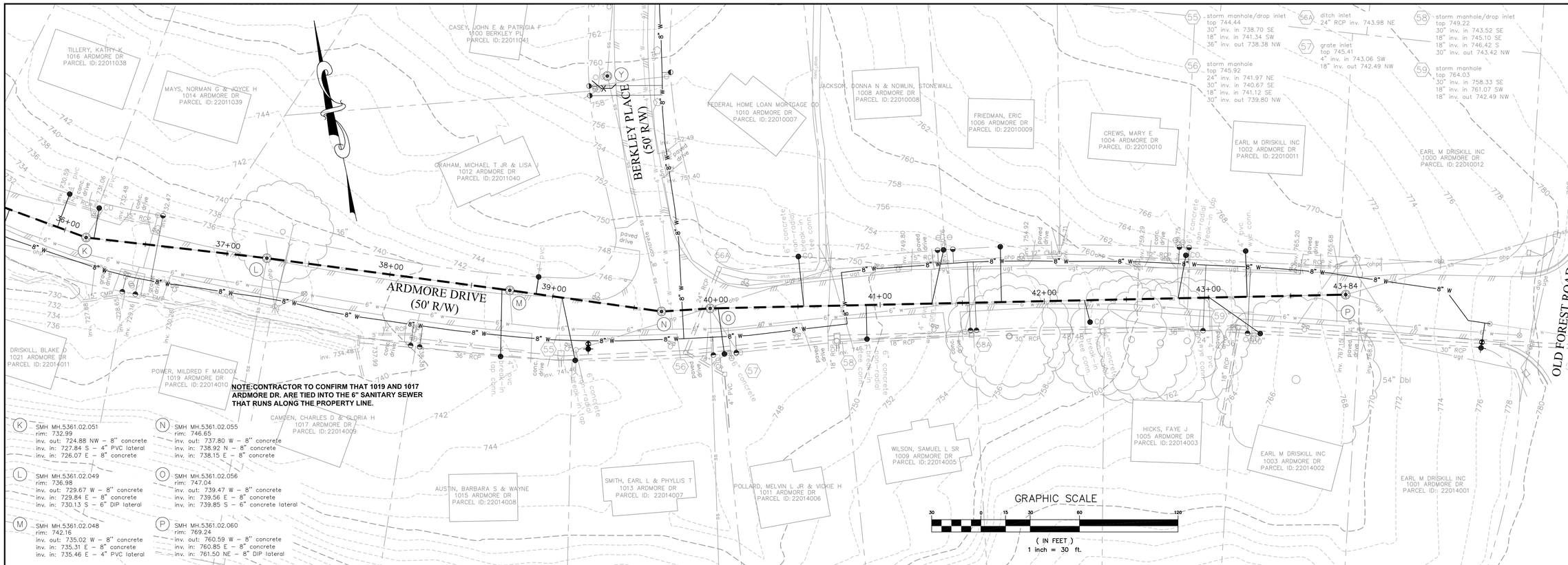

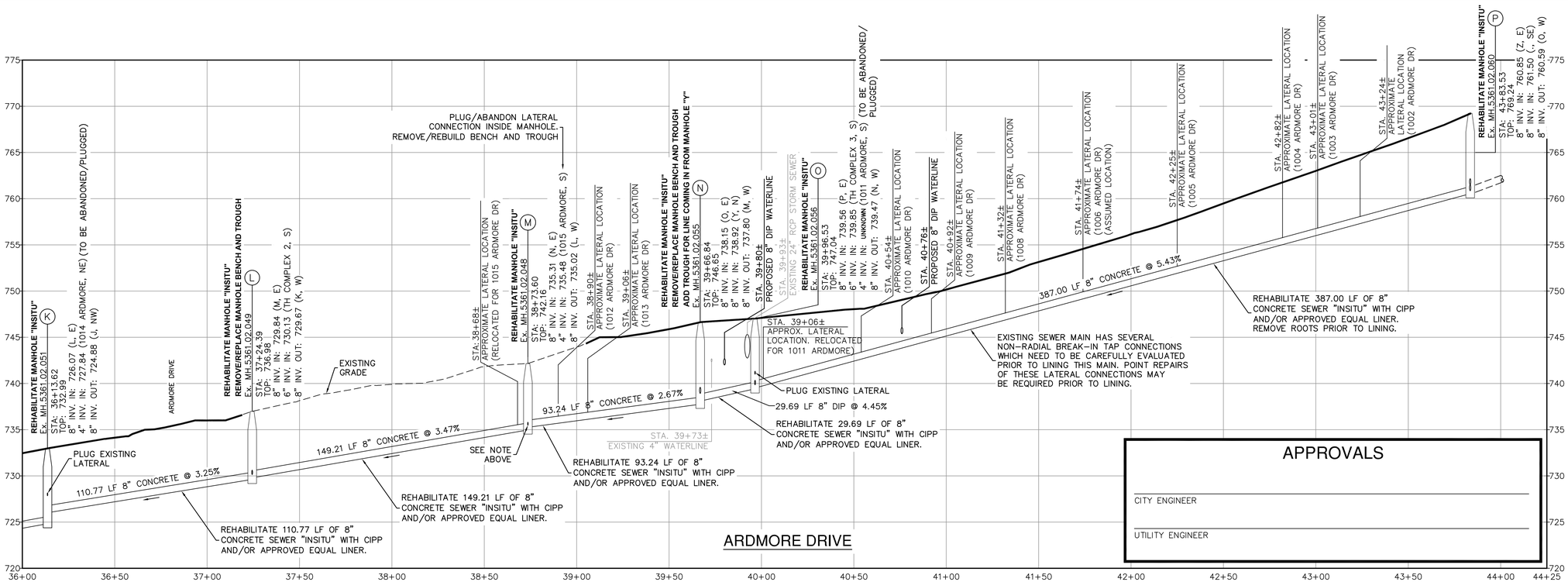

SEWER PROFILE
SCALE: H: 1"=30', V: 1"=6'

COMMONWEALTH OF VIRGINIA
SCOTT A. SCHILLER
Lic. No. 048071
7/25/14
PROFESSIONAL ENGINEER

Draper Aden Associates
Engineering • Surveying • Environmental Services
Blacksburg, VA
2905 South Main Street
Blacksburg, VA 24060
540-552-0444 Fax: 540-552-0291
www.daa.com
Richmond, VA
Charlottesville, VA
Hampton Roads, VA

SEWER PLAN AND PROFILE - ARDMORE DRIVE
BLUE RIDGE FARMS WATER, SANITARY, & STORM SEWER IMPROVEMENTS - PHASE 2

LYNCHBURG, VIRGINIA

REVISIONS

DESIGNED BY:	LMR/BMC
DRAWN BY:	BMC
CHECKED BY:	JST
SCALE:	1"=30'
DATE:	07/25/2014
PROJECT NUMBER:	B09223B-06

C-16

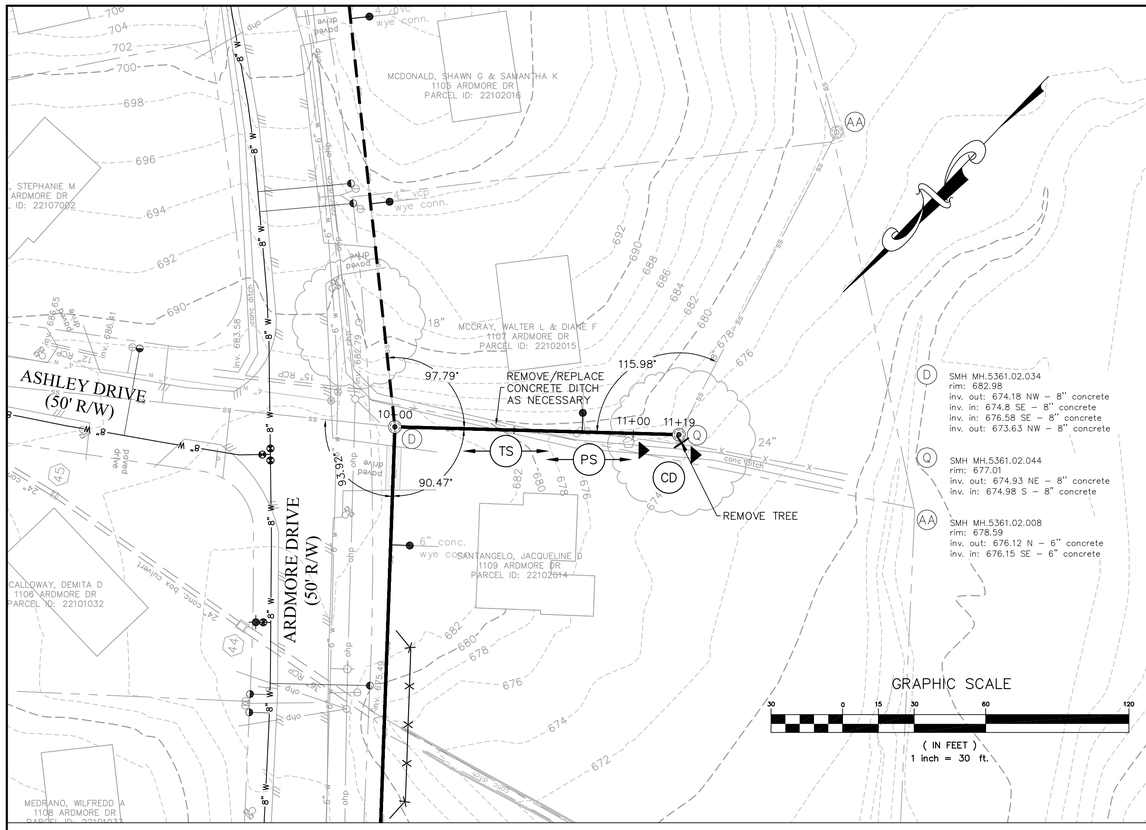

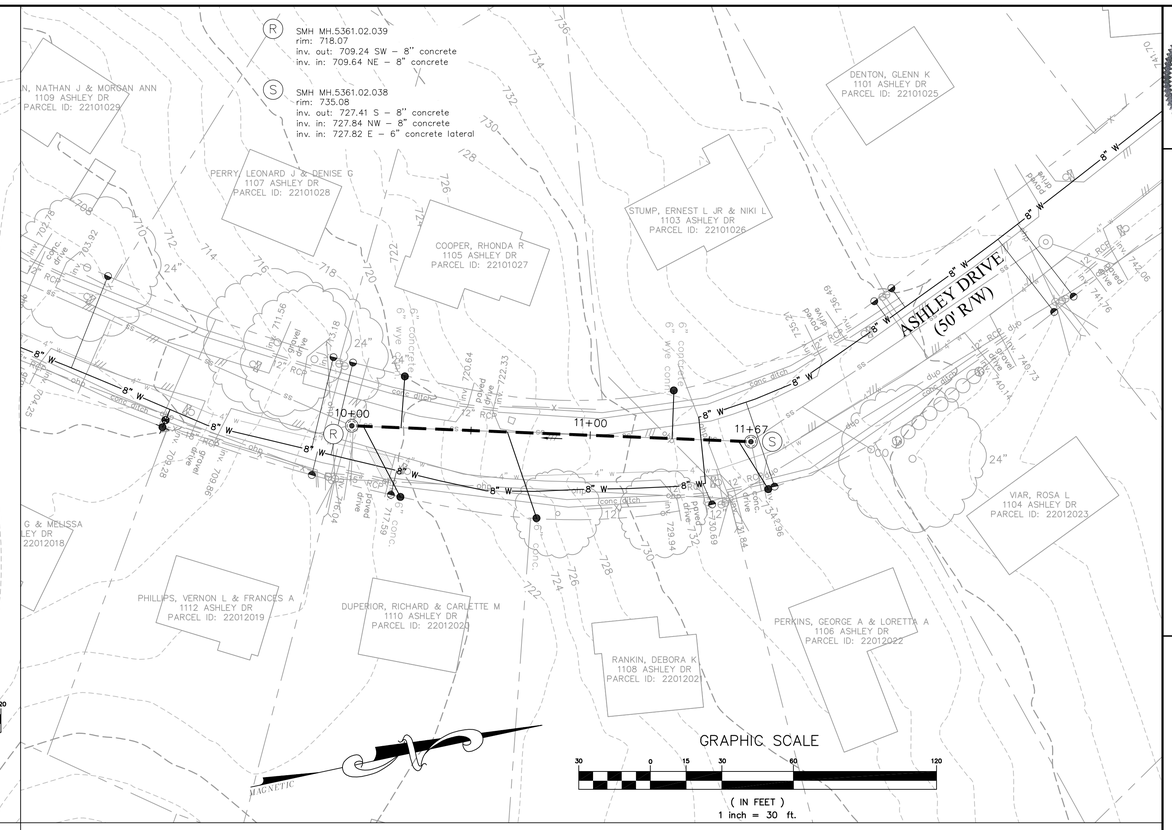

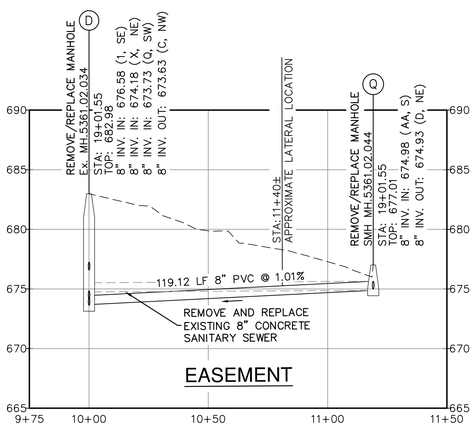

SEWER PROFILE
SCALE: H: 1"=30', V: 1"=6'

APPROXIMATELY 13 LF OF EX. 8" CONCRETE PIPE WAS NOT INSPECTED. CONTRACTOR MUST INSPECT THIS PORTION OF SEWER AND PROVIDE OWNER/ENGINEER WITH INSPECTION VIDEO TO BE EVALUATED. NO REHABILITATION CAN BE PERFORMED ON THIS SECTION UNTIL OWNER HAS ISSUED APPROVAL.

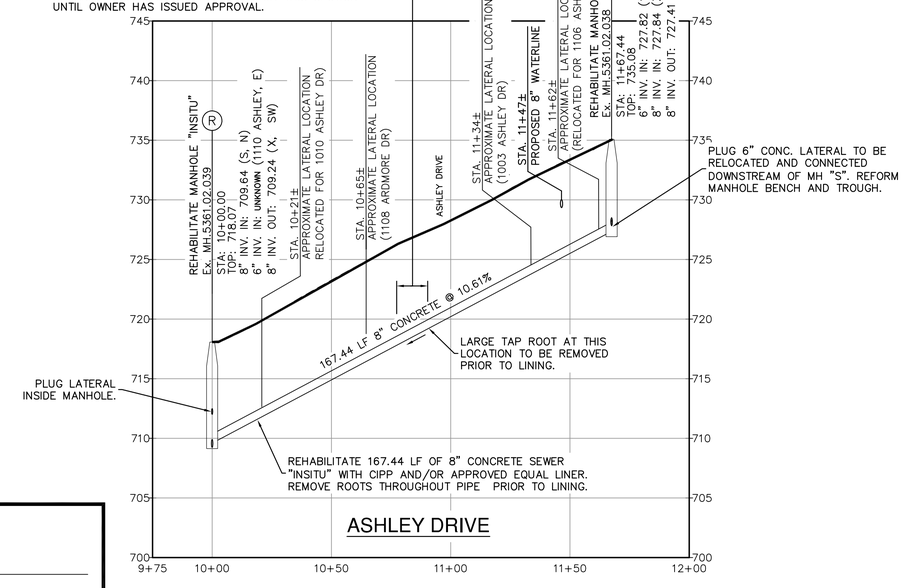

SEWER PROFILE
SCALE: H: 1"=30', V: 1"=6'

APPROVALS

CITY ENGINEER

UTILITY ENGINEER

COMMONWEALTH OF VIRGINIA
SCOTT A. SCHILLER
Lic. No. 048071
7/25/14
PROFESSIONAL ENGINEER

Draper Aden Associates
Engineering • Surveying • Environmental Services
Blacksburg, VA
2905 South Main Street
Blacksburg, VA 24060
540-552-0444 Fax: 540-552-0291
www.daa.com
Richmond, VA
Charlottesville, VA
Hampton Roads, VA

SEWER PLAN AND PROFILE - ASHLEY DRIVE
BLUE RIDGE FARMS WATER, SANITARY, & STORM SEWER IMPROVEMENTS - PHASE 2

LYNCHBURG, VIRGINIA

REVISIONS

DESIGNED BY:	LMR/BMC
DRAWN BY:	BMC
CHECKED BY:	JST
SCALE:	1"=30'
DATE:	07/25/2014
PROJECT NUMBER:	B09223B-06

C-17

APPROVALS

CITY ENGINEER

UTILITY ENGINEER

COMMONWEALTH OF VIRGINIA
SCOTT A. SCHILLER
Lic. No. 048071
7/25/14
PROFESSIONAL ENGINEER

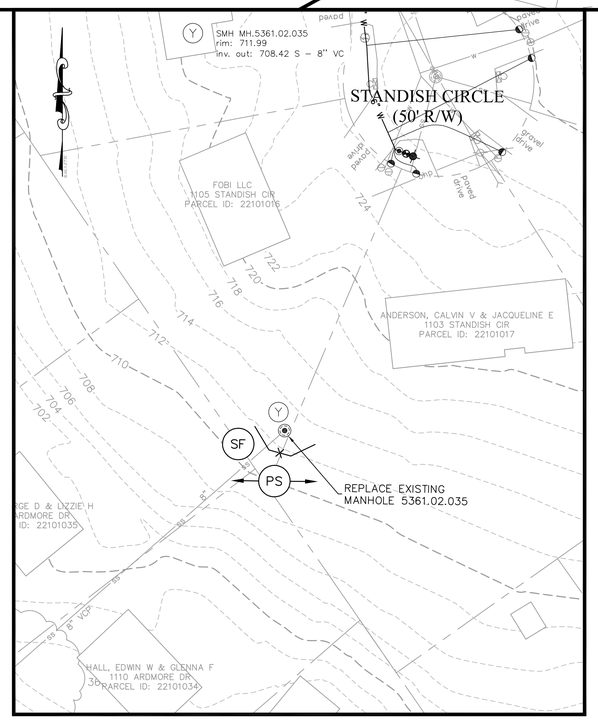

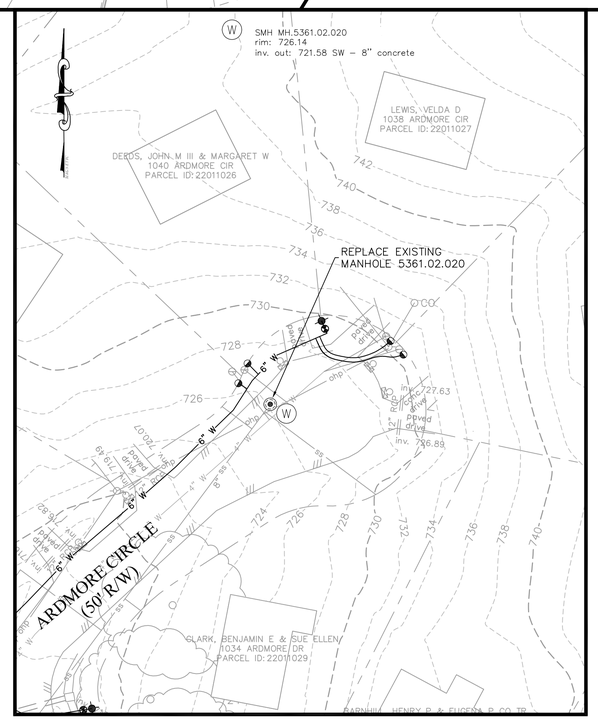

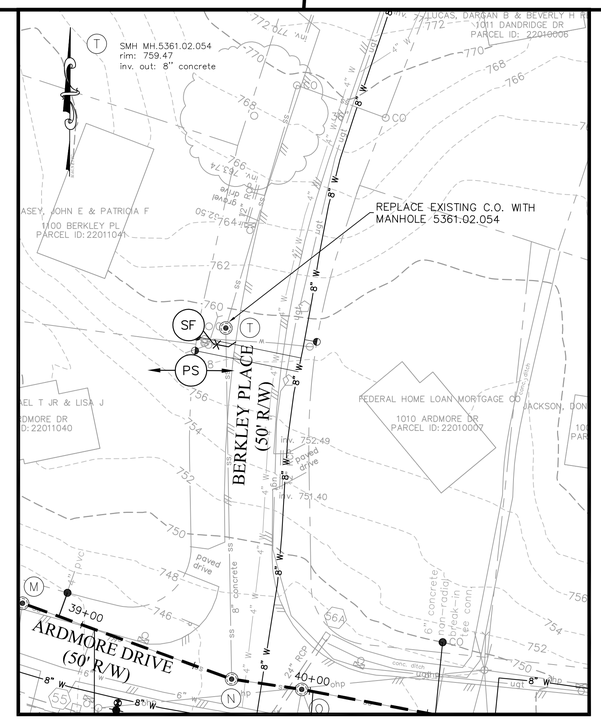

Draper Aden Associates

Engineering • Surveying • Environmental Services

Blacksburg, VA
2905 South Main Street
Blacksburg, VA 24060
540-552-0444 Fax: 540-552-0291
www.daa.com

Richmond, VA
Charlottesville, VA
Hampton Roads, VA

SEWER MANHOLE REPLACEMENT LOCATIONS
BLUE RIDGE FARMS WATER, SANITARY, & STORM SEWER IMPROVEMENTS - PHASE 2

LYNCHBURG, VIRGINIA

REVISIONS

DESIGNED BY:	LMR/BMC
DRAWN BY:	BMC
CHECKED BY:	LMR
SCALE:	1"=30'
DATE:	07/25/2014
PROJECT NUMBER:	B09223B-06

C-18

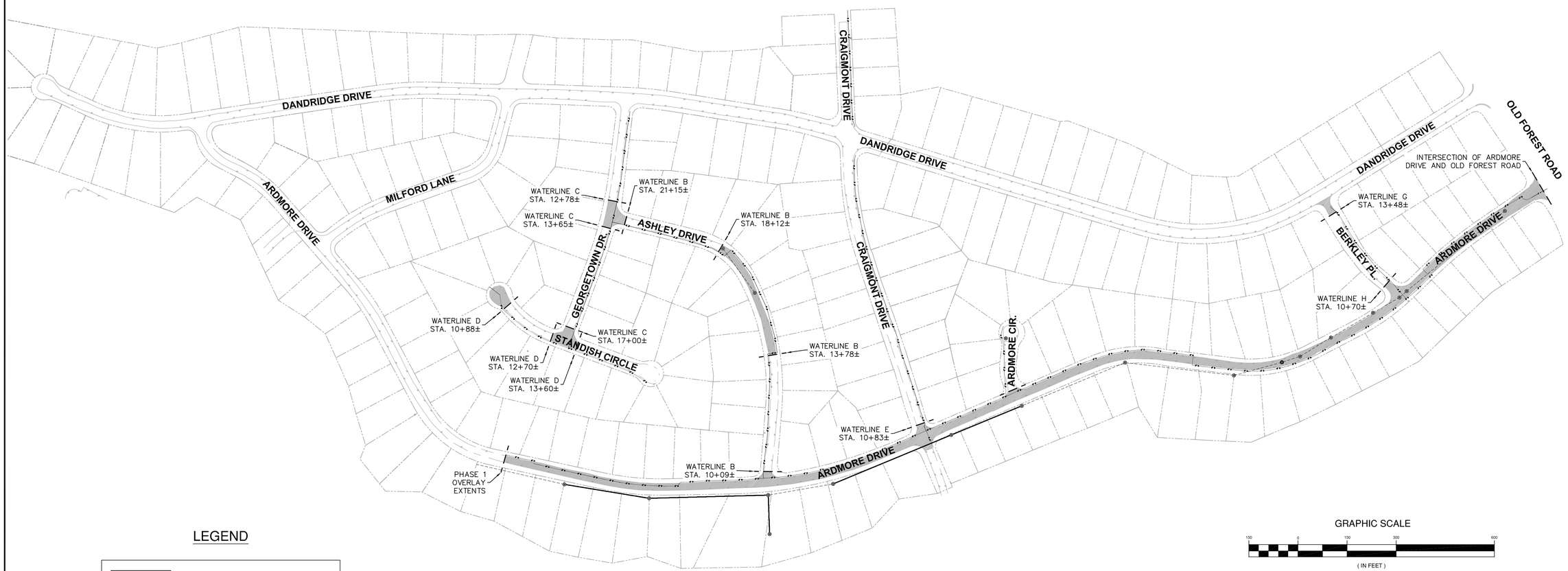

LEGEND

PAVEMENT OVERLAY

PAVEMENT OVERLAY LIMITS

NOTE: LIMITS OF PAVING TO BE DEFINED BY CITY PRIOR TO PAVING

GRAPHIC SCALE

150 0 150 300 600

(IN FEET)
1 inch = 150 ft.

APPROVALS

CITY ENGINEER

UTILITY ENGINEER

COMMONWEALTH OF VIRGINIA
SCOTT A. SCHILLER
Lic. No. 048071
7/25/14
PROFESSIONAL ENGINEER

Draper Aden Associates
Engineering • Surveying • Environmental Services
Blacksburg, VA
2905 South Main Street
Blacksburg, VA 24060
540-552-0444 Fax: 540-552-0291
www.dasi.com
Richmond, VA
Charlottesville, VA
Hampton Roads, VA

PAVEMENT PLAN
BLUE RIDGE FARMS WATER, SANITARY, & STORM SEWER IMPROVEMENTS - PHASE 2
LYNCHBURG, VIRGINIA

REVISIONS

DESIGNED BY:	LMR/BMC
DRAWN BY:	BMC
CHECKED BY:	JST/MSH/SAS
SCALE:	1" = 150'
DATE:	07/25/2014
PROJECT NUMBER:	B09223B-06

C-19

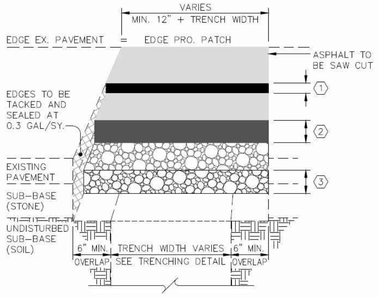

PATCH DESIGN FOR ASPHALT STREETS

TYPE STREET / TYPE PATCH	ARTERIAL and INDUSTRIAL TYPE A	COLLECTOR TYPE B	RESIDENTIAL TYPE C
1	2" SM-12.5D	2" SM-12.5D	2" SM-12.5A
2	8" BM25	6" BM25	4" BM25
3	7" VDOT NO.21A	4" VDOT NO.21A	4" VDOT NO.21A
PATCH DEPTH	TOTAL = 17"	TOTAL = 12"	TOTAL = 10"

NOTES:
1. PAVEMENT SHALL BE AS SHOWN UNLESS OTHERWISE SPECIFIED.

THE CITY OF LYNCHBURG
TRENCH PATCH
ASPHALT STREETS – TYPE A,B,& C
USE WITH THE CITY OF LYNCHBURG STANDARD SPECIFICATIONS ONLY
SCALE: NOT TO SCALE | DETAIL # 25.18
REVISION DATE: 12-14-2013 | SHEET # 1 OF 1

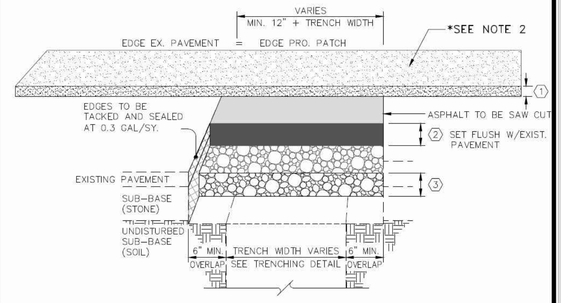

PATCH DESIGN FOR ASPHALT STREETS

*SEE NOTE 2

TYPE STREET	ARTERIAL and INDUSTRIAL	COLLECTOR	RESIDENTIAL
1	AS PER CITY ENGINEER	2" SM-12.5D	2" SM-12.5A
2	AS PER CITY ENGINEER	6" BM25	4" BM25
3	AS PER CITY ENGINEER	6" VDOT NO.21A	6" VDOT NO.21A
PATCH DEPTH			

NOTES:
1. PAVEMENT SHALL BE AS SHOWN UNLESS OTHERWISE SPECIFIED.
2. STREET OVERLAY IS NOT INCLUDED IN MEASUREMENT AND PAYMENT FOR TRENCH PATCH-TYPE J.

THE CITY OF LYNCHBURG
TRENCH PATCH W/OVERLAY
ASPHALT STREETS – TYPE J
USE WITH THE CITY OF LYNCHBURG STANDARD SPECIFICATIONS ONLY
SCALE: NOT TO SCALE | DETAIL # 25.18 A
REVISION DATE: 12-14-2013 | SHEET # 1 OF 1

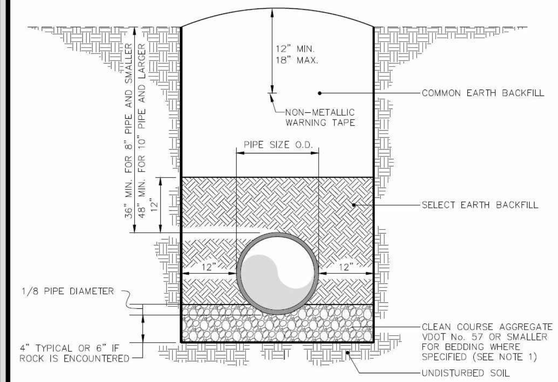

NOTES:
1. BEDDING SHALL BE REQUIRED FOR WATER LINES 16" IN DIAMETER AND LARGER OR IF ROCK IS ENCOUNTERED.
2. EXTRA DEPTH EXCAVATION SHALL BE PAID FOR AS ANYTHING BEYOND 4' OF COVER TO TOP OF PIPE.
3. ANY EXCAVATION BEYOND TRENCH LIMITS SHOWN ON DETAIL SHALL BE AT THE CONTRACTOR'S EXPENSE.

THE CITY OF LYNCHBURG
WATER LINE
TRENCH DETAIL
USE WITH THE CITY OF LYNCHBURG STANDARD SPECIFICATIONS ONLY
SCALE: NOT TO SCALE | DETAIL # 26.01
REVISION DATE: 12-14-2013 | SHEET # 1 OF 1

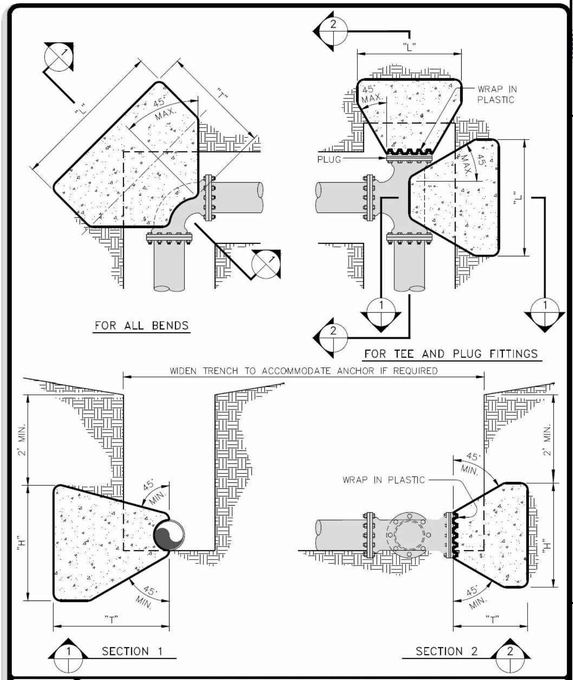

THE CITY OF LYNCHBURG
TYPE "F" HORIZONTAL
ANCHOR BLOCKING
USE WITH THE CITY OF LYNCHBURG STANDARD SPECIFICATIONS ONLY
SCALE: NOT TO SCALE | DETAIL # 26.02
REVISION DATE: 12-14-2013 | SHEET # 1 OF 3

TYPE "F" HORIZONTAL ANCHOR BLOCK DATUM

TYPE FITTING	PIPE SIZE INCHES	DIMENSIONS (Ft.) "L"	"H"	"T"	VOL. CONC. CU. YARDS
TEST PRESSURE = 150 P.S.I. & BELOW					
11 1/4°	6	1.5	2	2.5	0.19
22 1/2°	6	1.5	2	2.52	0.19
45°	6	2	2.25	2.6	0.26
90°	6	2.5	2.5	3.01	0.40
TEE	6	2	2.25	2.5	0.25
PLUG	6	2	2.25	2.5	0.25
11 1/4°	8	1.66	2.16	2.67	0.23
22 1/2°	8	1.66	2.16	2.69	0.23
45°	8	2.66	2.66	2.77	0.41
90°	8	3.66	3.16	3.21	0.75
TEE	8	3.16	2.91	2.66	0.50
PLUG	8	3.16	2.91	2.66	0.50
11 1/4°	12	2	2.5	3	0.33
22 1/2°	12	2.5	2.75	3.02	0.44
45°	12	4	3.5	3.12	0.87
90°	12	5.5	4.25	3.62	1.63
TEE	12	4.5	3.75	3	0.99
PLUG	12	4.5	3.75	3	0.99
TEST PRESSURE = 151 P.S.I. to 200 P.S.I.					
11 1/4°	6	1.5	2	2.5	0.19
22 1/2°	6	1.5	2	2.52	0.19
45°	6	2	2.55	2.6	0.29
90°	6	3	2.75	3.01	0.52
TEE	6	2.5	2.5	2.5	0.34
PLUG	6	2.5	2.5	2.5	0.34
11 1/4°	8	1.66	2.16	2.67	0.23
22 1/2°	8	2.16	2.41	2.69	0.31
45°	8	3.16	2.91	2.77	0.52
90°	8	4.16	3.41	3.21	0.90
TEE	8	3.66	3.16	2.66	0.62
PLUG	8	3.66	3.16	2.66	0.62
11 1/4°	12	2	2.5	3	0.33
22 1/2°	12	3	3	3.02	0.56
45°	12	4.5	3.75	3.12	1.03
90°	12	6.5	4.75	3.62	2.14
TEE	12	5.5	4.25	3	1.35
PLUG	12	5.5	4.25	3	1.35
TEST PRESSURE = 201 P.S.I. to 250 P.S.I.					
11 1/4°	6	1.5	2	2.5	0.19
22 1/2°	6	1.5	2	2.52	0.19
45°	6	2.5	2.5	2.6	0.35
90°	6	3.5	3	3.01	0.64
TEE	6	3	2.75	2.5	0.43
PLUG	6	3	2.75	2.5	0.43
11 1/4°	8	1.66	2.16	2.67	0.23
22 1/2°	8	2.16	2.41	2.69	0.31
45°	8	3.66	3.16	2.77	0.64
90°	8	4.66	3.66	3.21	1.07
TEE	8	4.16	3.41	2.66	0.75
PLUG	8	4.16	3.41	2.66	0.75
11 1/4°	12	2.5	2.75	3	0.44
22 1/2°	12	3.5	3.25	3.02	0.69
45°	12	5.5	4.25	3.12	1.41
90°	12	7.5	5.25	3.62	2.71
TEE	12	6	4.5	3	1.56
PLUG	12	6	4.5	3	1.56

THE CITY OF LYNCHBURG
TYPE "F" HORIZONTAL
ANCHOR BLOCKING
USE WITH THE CITY OF LYNCHBURG STANDARD SPECIFICATIONS ONLY
SCALE: NOT TO SCALE | DETAIL # 26.02
REVISION DATE: 12-14-2013 | SHEET # 2 OF 3

TYPE "F" HORIZONTAL ANCHOR BLOCK DATUM

TYPE FITTING	PIPE SIZE INCHES	DIMENSIONS (Ft.) "L"	"H"	"T"	VOL. CONC. CU. YARDS
TEST PRESSURE = 150 P.S.I. & BELOW					
11 1/4°	16	3	2	3	0.48
22 1/2°	16	4	3	3	0.93
45°	16	6	4	3	1.81
90°	16	8	5.5	3.75	3.92
TEE	16	8	5.5	2.67	3.02
PLUG	16	8	5.5	2.67	3.02
11 1/4°	24	4.5	3	4	1.31
22 1/2°	24	6	4.5	4	2.56
45°	24	8.5	6.25	4	4.97
90°	24	12	8	4.5	9.84
TEE	24	12	8	4	8.94
PLUG	24	12	8	4	8.94
TEST PRESSURE = 151 P.S.I. to 200 P.S.I.					
11 1/4°	16	3	2.67	3	0.63
22 1/2°	16	4.5	3.5	3	1.20
45°	16	7.5	4.25	3	2.40
90°	16	10	5.75	3.75	5.11
TEE	16	10	5.75	5	6.46
PLUG	16	10	5.75	5	6.46
11 1/4°	24	5	3.5	4	1.68
22 1/2°	24	7	5	4	3.30
45°	24	10	7	4	6.54
90°	24	13	10	4.5	13.31
TEE	24	13	10	4.5	13.31
PLUG	24	13	10	4.5	13.31
TEST PRESSURE = 201 P.S.I. to 250 P.S.I.					
11 1/4°	16	3.5	3	3	0.81
22 1/2°	16	5.5	3.67	3	1.53
45°	16	7.5	5.25	3	2.95
90°	16	12	6	3.75	6.38
TEE	16	12	6	4	6.72
PLUG	16	12	6	4	6.72
11 1/4°	24	6	3.75	4	2.14
22 1/2°	24	8	5.5	4	4.13
45°	24	12	7.25	4	8.11
90°	24	14	11.5	4.75	17.21
TEE	24	14	11.5	4.75	17.21
PLUG	24	14	11.5	4.75	17.21

THE CITY OF LYNCHBURG
TYPE "F" HORIZONTAL
ANCHOR BLOCKING
USE WITH THE CITY OF LYNCHBURG STANDARD SPECIFICATIONS ONLY
SCALE: NOT TO SCALE | DETAIL # 26.02
REVISION DATE: 12-14-2013 | SHEET # 3 OF 3

TIE ROD ANCHORS DATUM

PIPE SIZE (INCHES)	ROD DIAMETER (INCHES)	NUMBER OF A307 RODS REQUIRED
TEST PRESSURE = 150 P.S.I. & BELOW		
6	3/4	2
8	3/4	2
10	3/4	2
12	3/4	4
16	3/4	6
20	3/4	8
24	1	8
30	1	10
TEST PRESSURE = 151 P.S.I. to 200 PSI		
6	3/4	2
8	3/4	2
10	3/4	4
12	3/4	6
16	3/4	8
20	3/4	12
24	1	10
30	1	14
TEST PRESSURE = 201 P.S.I. to 250 P.S.I.		
6	3/4	4
8	3/4	4
10	3/4	4
12	3/4	6
16	3/4	12
20	3/4	14
24	1	16
30	1	20

TIE RODS SHALL BE A307 CADMIUM COATED TIE RODS.

THE CITY OF LYNCHBURG
TIE ROD ANCHORS DATUM
CHART
USE WITH THE CITY OF LYNCHBURG STANDARD SPECIFICATIONS ONLY
SCALE: NOT TO SCALE | DETAIL # 26.03
REVISION DATE: 12-14-2013 | SHEET # 1 OF 1

NOTE: ALL BENDS AND TEES SHALL ALSO BE RESTRAINED WITH MEGA-LUGS OR APPROVED EQUAL

APPROVALS

CITY ENGINEER

UTILITY ENGINEER

COMMONWEALTH OF VIRGINIA
SCOTT A. SCHILLER
Lic. No. 048071
7/25/14
PROFESSIONAL ENGINEER

Draper Aden Associates
Engineering • Surveying • Environmental Services
Richmond, VA
Charlottesville, VA
Hampton Roads, VA
Blacksburg, VA
2206 South Main Street
Blacksburg, VA 24060
540-552-0444 Fax: 540-552-0291
www.daa.com

DETAILS
BLUE RIDGE FARMS WATER, SANITARY, & STORM SEWER IMPROVEMENTS - PHASE 2
LYNCHBURG, VIRGINIA

REVISIONS

DESIGNED BY: LMR/BMC
DRAWN BY: BMC
CHECKED BY: JST/MSH/SAS
SCALE: AS SHOWN
DATE: 07/25/2014
PROJECT NUMBER: B09223B-06

D-1

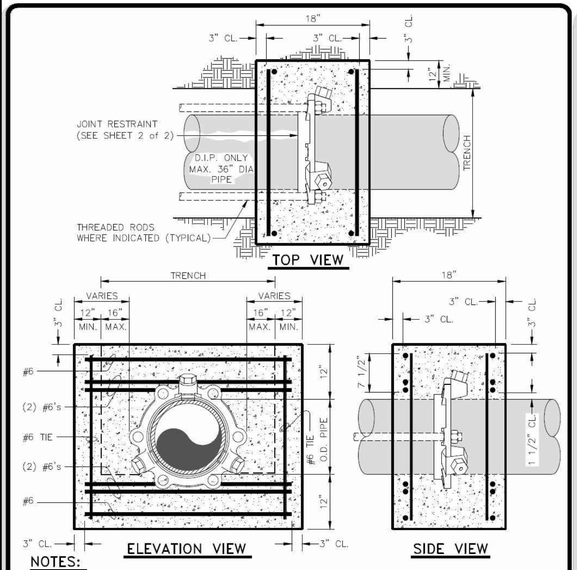

NOTES:

1. CONCRETE SHALL BE 3000 P.S.I.
2. REINFORCING BARS SHALL BE DEFORMED, AND TIED TOGETHER.
3. TRENCH BOTTOM WIDTH IN VICINITY OF THRUST BLOCK(S) INSTALLATION SHALL BE THE MINIMUM WIDTH.
4. BACKFILL AND COMPACT IN 6" LAYERS.
5. PLACE THRUST COLLAR ON ONE FULL JOINT OF PIPE.
6. LAST JOINT OF PIPE WITH THRUST COLLAR TO BE MECHANICAL JOINT PIPE.
7. PLACE RESTRAINED JOINT THRUST RING 4' FROM PLUG END OF PIPE.

THE CITY OF LYNCHBURG

THRUST COLLAR & BLOCKING DETAIL

USE WITH THE CITY OF LYNCHBURG STANDARD SPECIFICATIONS ONLY

SCALE: NOT TO SCALE | DETAIL # 26.04 | REVISION DATE: 12-14-2013 | SHEET # 1 OF 2

TYPE "F" HORIZONTAL ANCHOR BLOCK DATUM

TYPE FITTING	PIPE SIZE INCHES	DIMENSIONS (Ft.) "L"	"W"	"T"	VOL. CONC. CU. YARDS
TEST PRESSURE = 150 P.S.I. & BELOW					
11 1/4°	6	1.5	2	2.5	0.19
22 1/2°	6	1.5	2	2.52	0.19
45°	6	2	2.25	2.6	0.26
90°	6	2.5	2.5	3.01	0.40
TEE	6	2	2.25	2.5	0.25
PLUG	6	2	2.25	2.5	0.25
11 1/4°	8	1.66	2.16	2.67	0.23
22 1/2°	8	1.66	2.16	2.69	0.23
45°	8	2.66	2.66	2.77	0.41
90°	8	3.66	3.16	3.21	0.75
TEE	8	3.16	2.91	2.66	0.50
PLUG	8	3.16	2.91	2.66	0.50
11 1/4°	12	2	2.5	3	0.33
22 1/2°	12	2.5	2.75	3.02	0.44
45°	12	4	3.5	3.12	0.87
90°	12	5.5	4.25	3.62	1.63
TEE	12	4.5	3.75	3	0.99
PLUG	12	4.5	3.75	3	0.99
TEST PRESSURE = 151 P.S.I. to 200 P.S.I.					
11 1/4°	6	1.5	2	2.5	0.19
22 1/2°	6	1.5	2	2.52	0.19
45°	6	2	2.55	2.6	0.29
90°	6	3	2.75	3.01	0.52
TEE	6	2.5	2.5	2.5	0.34
PLUG	6	2.5	2.5	2.5	0.34
11 1/4°	8	1.66	2.16	2.67	0.23
22 1/2°	8	2.16	2.41	2.69	0.31
45°	8	3.16	2.91	2.77	0.52
90°	8	4.16	3.41	3.21	0.90
TEE	8	3.66	3.16	2.66	0.62
PLUG	8	3.66	3.16	2.66	0.62
11 1/4°	12	2	2.5	3	0.33
22 1/2°	12	3	3	3.02	0.56
45°	12	4.5	3.75	3.12	1.03
90°	12	6.5	4.75	3.62	2.14
TEE	12	5.5	4.25	3	1.35
PLUG	12	5.5	4.25	3	1.35
TEST PRESSURE = 201 P.S.I. to 250 P.S.I.					
11 1/4°	6	1.5	2	2.5	0.19
22 1/2°	6	1.5	2	2.52	0.19
45°	6	2.5	2.5	2.6	0.35
90°	6	3.5	3	3.01	0.64
TEE	6	3	2.75	2.5	0.43
PLUG	6	3	2.75	2.5	0.43
11 1/4°	8	1.66	2.16	2.67	0.23
22 1/2°	8	2.16	2.41	2.69	0.31
45°	8	3.66	3.16	2.77	0.64
90°	8	4.66	3.66	3.21	1.07
TEE	8	4.16	3.41	2.66	0.75
PLUG	8	4.16	3.41	2.66	0.75
11 1/4°	12	2.5	2.75	3	0.44
22 1/2°	12	3.5	3.25	3.02	0.69
45°	12	5.5	4.25	3.12	1.41
90°	12	7.5	5.25	3.62	2.71
TEE	12	6	4.5	3	1.56
PLUG	12	6	4.5	3	1.56

THE CITY OF LYNCHBURG

TYPE "F" HORIZONTAL ANCHOR BLOCKING

USE WITH THE CITY OF LYNCHBURG STANDARD SPECIFICATIONS ONLY

SCALE: NOT TO SCALE | DETAIL # 26.02 | REVISION DATE: 12-14-2013 | SHEET # 2 OF 3

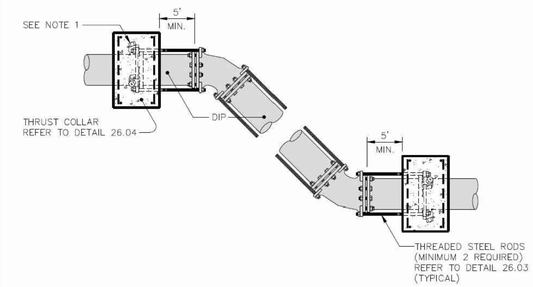

NOTES:

1. RESTRAINED JOINT THRUST RING SHALL BE USED ON ALL FITTINGS.

THE CITY OF LYNCHBURG

VERTICAL BEND IN WATER LINE DETAIL

USE WITH THE CITY OF LYNCHBURG STANDARD SPECIFICATIONS ONLY

SCALE: NOT TO SCALE | DETAIL # 26.05 | REVISION DATE: 12-14-2013 | SHEET # 1 OF 1

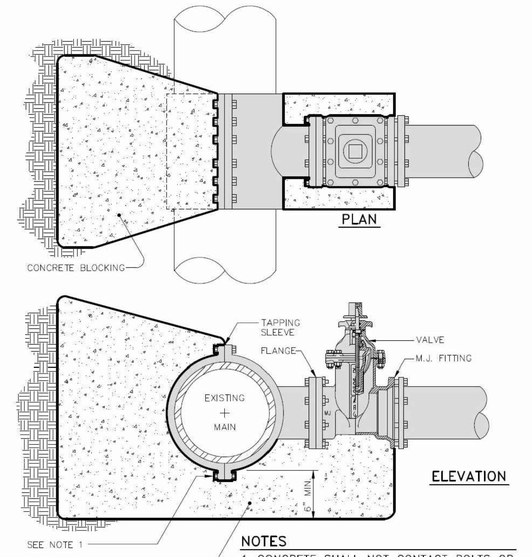

NOTES

1. CONCRETE SHALL NOT CONTACT BOLTS OR ENDS OF MECHANICAL JOINT FITTINGS. (WRAP IN PLASTIC)
2. SEE TYPE "F" (HORIZONTAL) ANCHOR BLOCK DETAIL 26.02 FOR AREA OF CONCRETE REQUIRED.
3. TAPPING SLEEVE SHALL BE A MINIMUM OF 4' FROM NEAREST PIPE JOINT.

THE CITY OF LYNCHBURG

TAPPING SLEEVE & VALVE DETAIL

USE WITH THE CITY OF LYNCHBURG STANDARD SPECIFICATIONS ONLY

SCALE: NOT TO SCALE | DETAIL # 26.06 | REVISION DATE: 12-14-2013 | SHEET # 1 OF 1

NOTE:

COMPLETE FIRE HYDRANT ASSEMBLY INCLUDES TEE, BRANCH PIPE, FITTINGS, GATE VALVE AND BOX, THRUST BLOCK, MECHANICAL JOINT RESTAINT, AND STONE.

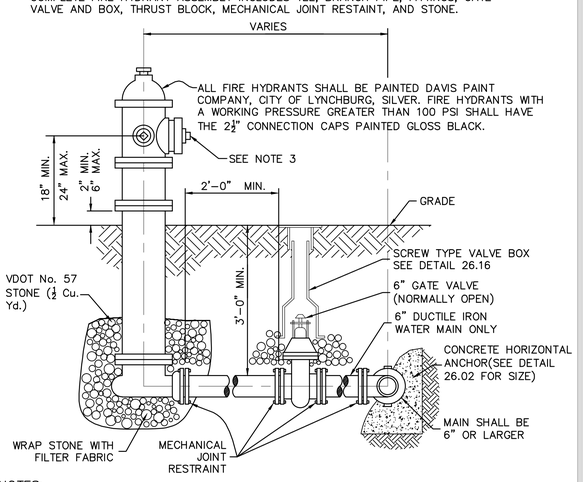

NOTES:

1. (TWO) MECHANICAL JOINT RESTRAINTS (RESTRAINED JOINT THRUST RINGS) SHALL BE INSTALLED ON THE MAIN LINE OF EACH SIDE OF THE TEE.
2. CHAINS ON THE FIRE HYDRANTS TO BE REMOVED
3. HYDRANTS TO BE PLACED WITH PUMPER NOZZLE FACING THE STREET OR AS OTHERWISE DIRECTED.
4. WHEN VALVE BOX IS PLACED OUTSIDE OF PAVEMENT, PROVIDE PRECAST SHOULDER SLAB. (DETAIL 26.18)
5. WHEN FIRE HYDRANTS ARE INSTALLED WHERE ROADWAY HAS A DRAINAGE DITCH AND NO CURB & GUTTER, MINIMUM COVER SHALL BE 24" FROM THE BOTTOM OF THE DITCH.
6. WHEN HYDRANT IS SET BEHIND GUARDRAIL, CENTERLINE OF PUMPER NOZZLE TO BE A MINIMUM OF 12" AND A MAXIMUM OF 18" ABOUT TOP OF GUARDRAIL.

FIRE HYDRANT ASSEMBLY

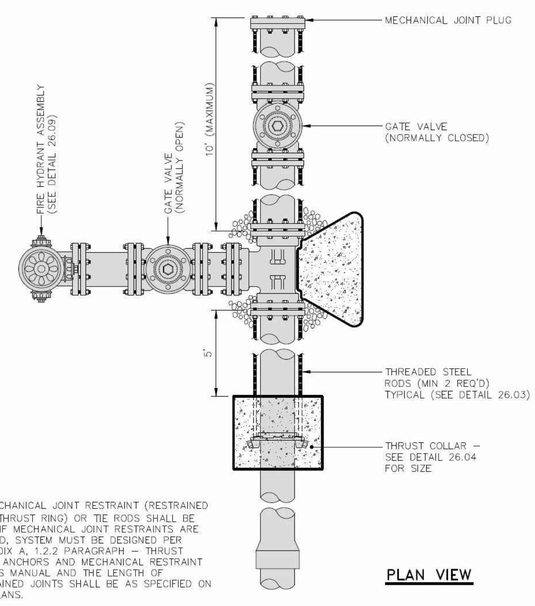

NOTES:

1. MECHANICAL JOINT RESTRAINT (RESTRAINED JOINT THRUST RING) OR TIE RODS SHALL BE USED. IF MECHANICAL JOINT RESTRAINTS ARE UTILIZED, SYSTEM MUST BE DESIGNED PER APPENDIX A, 1.2.2 PARAGRAPH – THRUST BLOCK ANCHORS AND MECHANICAL RESTRAINT OF THIS MANUAL AND THE LENGTH OF RESTRAINED JOINTS SHALL BE AS SPECIFIED ON THE PLANS.

THE CITY OF LYNCHBURG

END of LINE for FUTURE EXPANSION

USE WITH THE CITY OF LYNCHBURG STANDARD SPECIFICATIONS ONLY

SCALE: NOT TO SCALE | DETAIL # 26.08 | REVISION DATE: 12-14-2013 | SHEET # 1 OF 1

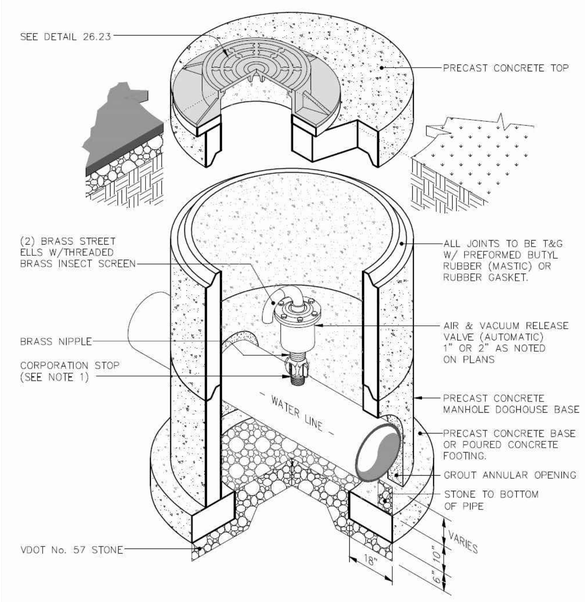

NOTES:

1. DO NOT EXCEED ALLOWABLE DIRECT TAP ALLOWED BY PIPE MANUFACTURER. OTHERWISE, USE DOUBLE STRAP SERVICE SADDLE FOR 2" AIR RELEASE.
2. CONE SECTION MAY BE SUBSTITUTED FOR FLAT TOP ACCORDING TO DEPTH.

THE CITY OF LYNCHBURG

AIR & VACUUM RELEASE VALVE in PRECAST MANHOLE

USE WITH THE CITY OF LYNCHBURG STANDARD SPECIFICATIONS ONLY

SCALE: NOT TO SCALE | DETAIL # 26.11 | REVISION DATE: 12-14-2013 | SHEET # 1 OF 1

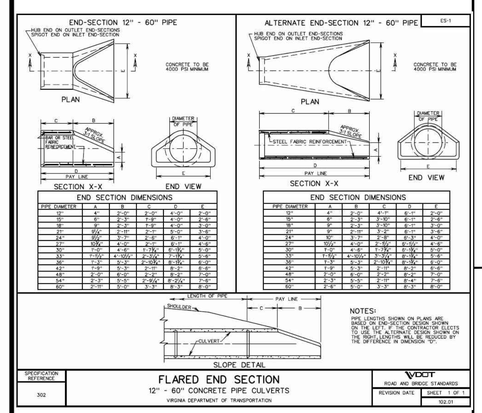

APPROVALS

CITY ENGINEER

UTILITY ENGINEER

COMMONWEALTH OF VIRGINIA
SCOTT A. SCHILLER
Lic. No. 048071
7/25/14
PROFESSIONAL ENGINEER

Draper Aden Associates
Engineering • Surveying • Environmental Services
Blacksburg, VA
2905 South Main Street
Blacksburg, VA 24060
540-552-0444 Fax: 540-552-0291
www.daa.com
Richmond, VA
Charlottesville, VA
Hampton Roads, VA

DETAILS

BLUE RIDGE FARMS WATER, SANITARY, & STORM SEWER IMPROVEMENTS - PHASE 2

LYNCHBURG, VIRGINIA

REVISIONS

DESIGNED BY: LMR/BMC
DRAWN BY: BMC
CHECKED BY: JST/MSH/SAS
SCALE: AS SHOWN
DATE: 07/25/2014
PROJECT NUMBER: B09223B-06

D-2

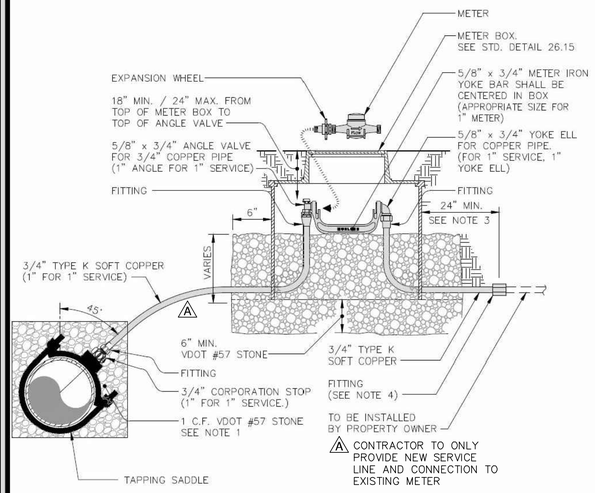

NOTES:

1. FULLY ENCOMPASS TAPPING SADDLE WITH STONE.
2. METER BOX TO BE LOCATED ON THE RIGHT-OF-WAY SIDE OF PROPERTY LINE.
3. WHEN METER BOX IS SET IN SIDEWALK, PIGTAIL TO EXTEND 2 FEET BEYOND EDGE OF SIDEWALK.
4. FITTING TO BE USED WHEN CONNECTING TO EXISTING SERVICE, OTHERWISE CRIMP END OF SERVICE LINE.
5. METER & EXPANSION WHEEL TO BE FURNISHED & INSTALLED BY CITY.
6. THIS DETAIL IS FOR EXISTING SERVICE REPLACEMENT PROJECTS ONLY.

THE CITY OF LYNCHBURG

3/4 INCH WATER SERVICE (1 INCH WATER SERVICE SIMILAR) (EXISTING CONNECTIONS ONLY)

USE WITH THE CITY OF LYNCHBURG STANDARD SPECIFICATIONS ONLY

SCALE: NOT TO SCALE | DETAIL # 26.12A | REVISION DATE: 12-14-2013 | SHEET # 1 OF 1

ISOMETRIC VIEW

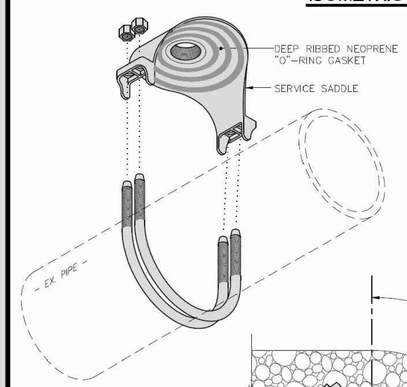

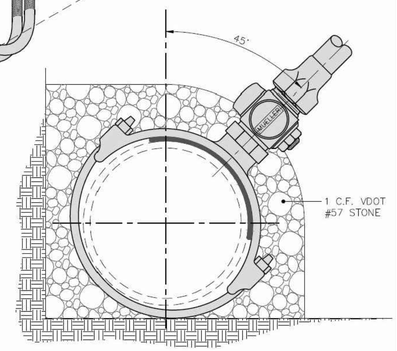

SECTION VIEW

THE CITY OF LYNCHBURG

TYP. DOUBLE STRAP SERVICE SADDLE FOR 6" THRU 12" MAINS

USE WITH THE CITY OF LYNCHBURG STANDARD SPECIFICATIONS ONLY

SCALE: NOT TO SCALE | DETAIL # 26.14 | REVISION DATE: 12-14-2013 | SHEET # 1 OF 1

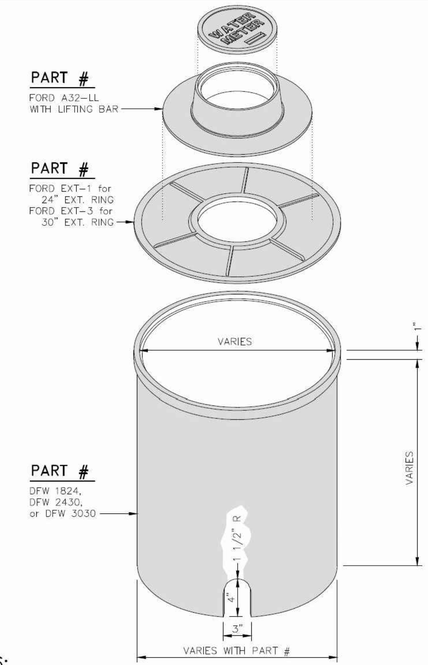

NOTES:

1. THIS BOX AND LID IS NON-TRAFFIC BEARING. WHEN A TRAFFIC BEARING BOX AND LID IS REQUIRED, DETAIL SHALL BE SUBMITTED TO CITY ENGINEER FOR APPROVAL.

THE CITY OF LYNCHBURG

STANDARD 18"x24", 24"x30", or 30"x30" - ROUND METER BOX

USE WITH THE CITY OF LYNCHBURG STANDARD SPECIFICATIONS ONLY

SCALE: NOT TO SCALE | DETAIL # 26.15 | REVISION DATE: 12-14-2013 | SHEET # 1 OF 1

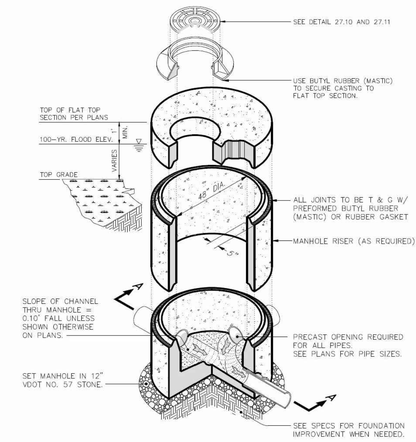

THE CITY OF LYNCHBURG

STANDARD 4' DIA. PRECAST FLAT TOP MANHOLE

USE WITH THE CITY OF LYNCHBURG STANDARD SPECIFICATIONS ONLY

SCALE: NOT TO SCALE | DETAIL # 27.03 | REVISION DATE: 12-14-2013 | SHEET # 1 OF 2

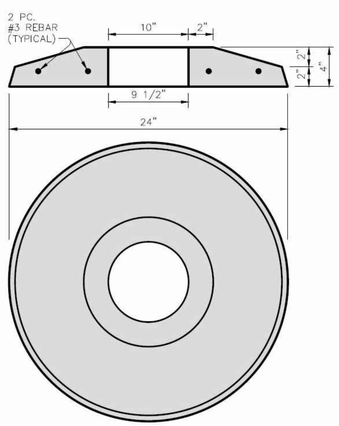

NOTES:

1. VALVE BOX PAD IS TO BE MADE OF CLASS A-3 CONCRETE (3000 PSI @ 28 DAYS).
2. TO BE USED IN UNPAVED AREAS.

THE CITY OF LYNCHBURG

VALVE BOX PRECAST SHOULDER SLAB DETAIL

USE WITH THE CITY OF LYNCHBURG STANDARD SPECIFICATIONS ONLY

SCALE: NOT TO SCALE | DETAIL # 26.18 | REVISION DATE: 12-14-2013 | SHEET # 1 OF 1

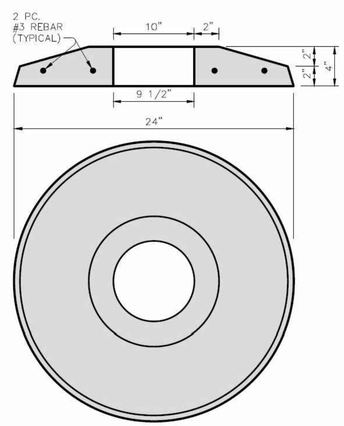

NOTES:

1. VALVE BOX PAD IS TO BE MADE OF CLASS A-3 CONCRETE (3000 PSI @ 28 DAYS).
2. TO BE USED IN UNPAVED AREAS.

THE CITY OF LYNCHBURG

VALVE BOX PRECAST SHOULDER SLAB DETAIL

USE WITH THE CITY OF LYNCHBURG STANDARD SPECIFICATIONS ONLY

SCALE: NOT TO SCALE | DETAIL # 26.18 | REVISION DATE: 12-14-2013 | SHEET # 1 OF 1

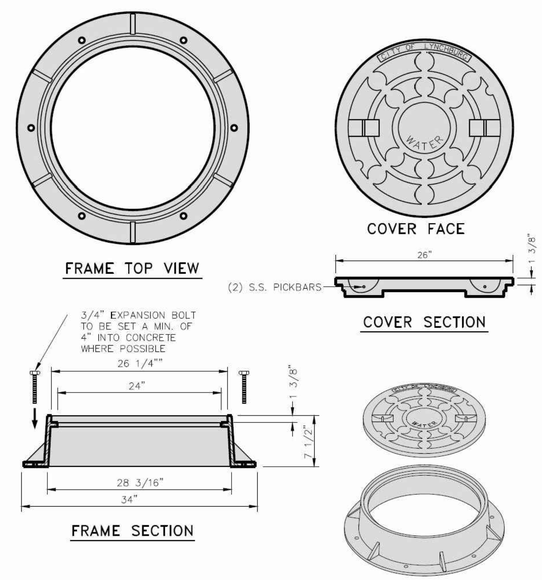

NOTES:

1. PARTS #'s: US FOUNDRY 710 RING AND DP COVER, EAST JORDAN IRON WORKS OR APPROVED EQUAL.
2. MANHOLE FRAMES AND COVERS SHALL BE ROADWAY TYPE WITH DEEP SOCKET COVERS. MACHINE FRAMES AND COVERS TO PREVENT RATTLING. CASTINGS SHALL BE GRAY IRON MEETING REQUIREMENTS OF ASTM A48, CLASS 30.

THE CITY OF LYNCHBURG

STANDARD MANHOLE FRAME and COVER

USE WITH THE CITY OF LYNCHBURG STANDARD SPECIFICATIONS ONLY

SCALE: NOT TO SCALE | DETAIL # 26.23 | REVISION DATE: 12-14-2013 | SHEET # 1 OF 1

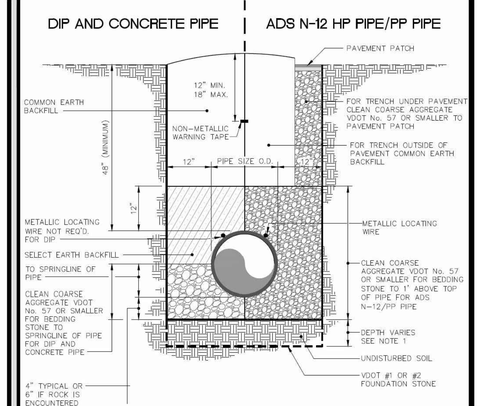

NOTES:

1. FOUNDATION STONE SHALL BE REQUIRED WHEN SOIL CONDITIONS ARE UNSUITABLE.
2. EXTRA DEPTH EXCAVATION SHALL BE PAID FOR AS ANYTHING BEYOND 4' OF COVER TO TOP OF PIPE.
3. AN ADDITIONAL 1 INCH DEPTH OF BEDDING MATERIAL WILL BE REQUIRED FOR EACH ADDITIONAL 2 FEET OF TRENCH DEPTH IN EXCESS OF 16 FEET UP TO A MAXIMUM OF 12 INCHES.
4. NON-METALLIC WARNING TAPE AND METALLIC LOCATING WIRE NOT REQUIRED FOR CULVERTS UNDER ROAD.

THE CITY OF LYNCHBURG

STORM SEWER LINE TRENCH DETAIL

USE WITH THE CITY OF LYNCHBURG STANDARD SPECIFICATIONS ONLY

SCALE: NOT TO SCALE | DETAIL # 27.01A | REVISION DATE: 12-14-2013 | SHEET # 1 OF 1

APPROVALS

CITY ENGINEER

UTILITY ENGINEER

COMMONWEALTH OF VIRGINIA
SCOTT A. SCHULER
Lic. No. 048071
7/25/14
PROFESSIONAL ENGINEER

Draper Aden Associates
Engineering • Surveying • Environmental Services
Blacksburg, VA
2206 South Main Street
Blacksburg, VA 24060
540-552-0444 Fax: 540-552-0291
www.daa.com
Richmond, VA
Charlottesville, VA
Hampton Roads, VA

DETAILS

BLUE RIDGE FARMS WATER, SANITARY, & STORM SEWER IMPROVEMENTS - PHASE 2

LYNCHBURG, VIRGINIA

REVISIONS

DESIGNED BY:	LMR/BMC
DRAWN BY:	BMC
CHECKED BY:	JST/MSH/SAS
SCALE:	AS SHOWN
DATE:	07/25/2014
PROJECT NUMBER:	B09223B-06

D-3

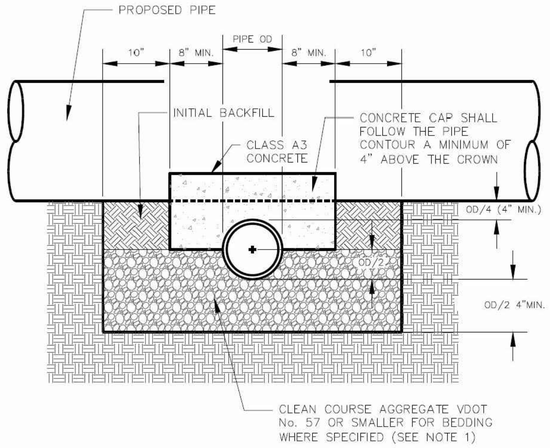

CAP DETAIL

THE CITY OF LYNCHBURG

CONCRETE CAP & CRADLE DETAIL

USE WITH THE CITY OF LYNCHBURG STANDARD SPECIFICATIONS ONLY

SCALE:	DETAIL #
NOT TO SCALE	25.26
REVISION DATE: 12-14-2013	SHEET # 1 OF 2

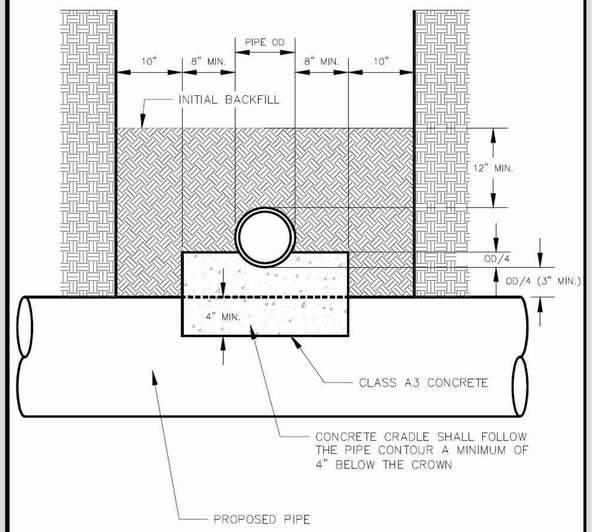

CRADLE DETAIL

THE CITY OF LYNCHBURG

CONCRETE CAP & CRADLE DETAIL

USE WITH THE CITY OF LYNCHBURG STANDARD SPECIFICATIONS ONLY

SCALE:	DETAIL #
NOT TO SCALE	25.26
REVISION DATE: 12-14-2013	SHEET # 2 OF 2

OPEN CUT CONCRETE DRIVEWAY CROSSING

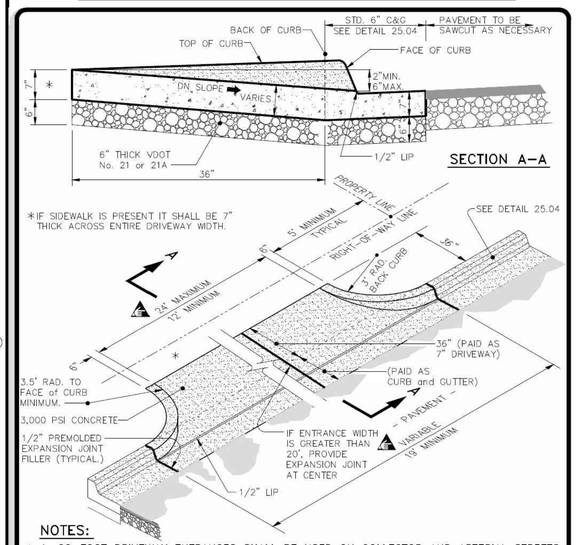

NOTES:

1. 20-FOOT DRIVEWAY ENTRANCES SHALL BE USED ON COLLECTOR AND ARTERIAL STREETS.
2. RESIDENTIAL DRIVEWAYS SHALL NOT BE CONSTRUCTED IN THE RADIUS OF A CORNER LOT.
3. VDOT STANDARDS MAY BE SUBSTITUTED IF APPROVED BY CITY ENGINEER.
4. GRAVEL DRIVEWAYS ON COLLECTOR AND ARTERIAL STREETS SHALL BE PAVED A MINIMUM OF 10 FEET FROM EDGE OF CURB OR TO THE RIGHT-OF-WAY LINE, WHICHEVER IS GREATER.
5. ENTIRE ENTRANCE INCLUDING GUTTER AND APRON SHALL BE POURED MONOLITHICALLY.
6. WIDTH OF CURB & GUTTER SHALL MATCH WIDTH OF EXISTING CURB & GUTTER.
7. DRIVEWAY ENTRANCES TO BE APPROVED BY CITY ENGINEER PRIOR TO PLACEMENT OF CONC.

THE CITY OF LYNCHBURG

RESIDENTIAL DRIVEWAY ENTRANCE

USE WITH THE CITY OF LYNCHBURG STANDARD SPECIFICATIONS ONLY

SCALE:	DETAIL #
NOT TO SCALE	25.11
REVISION DATE: 12-14-2013	SHEET # 1 OF 1

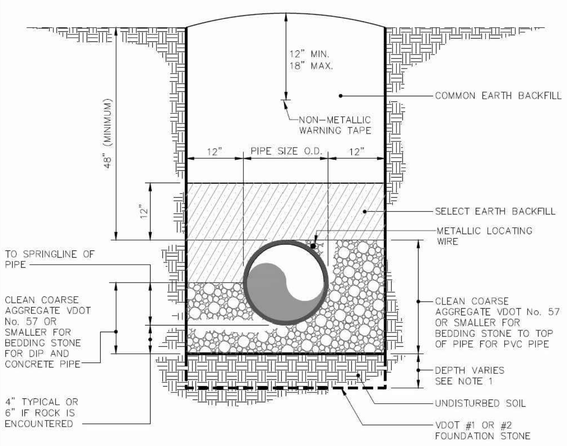

NOTES:

1. FOUNDATION STONE SHALL BE REQUIRED WHEN SOIL CONDITIONS ARE UNSUITABLE.
2. EXTRA DEPTH EXCAVATION SHALL BE PAID FOR AS ANYTHING BEYOND 4' OF COVER TO TOP OF PIPE.
3. AN ADDITIONAL 1 INCH DEPTH OF BEDDING MATERIAL WILL BE REQUIRED FOR EACH ADDITIONAL 2 FEET OF TRENCH DEPTH IN EXCESS OF 16 FEET UP TO A MAXIMUM OF 12 INCHES.

THE CITY OF LYNCHBURG

SANITARY SEWER LINE TRENCH DETAIL

USE WITH THE CITY OF LYNCHBURG STANDARD SPECIFICATIONS ONLY

SCALE:	DETAIL #
NOT TO SCALE	27.01
REVISION DATE: 12-14-2013	SHEET # 1 OF 1

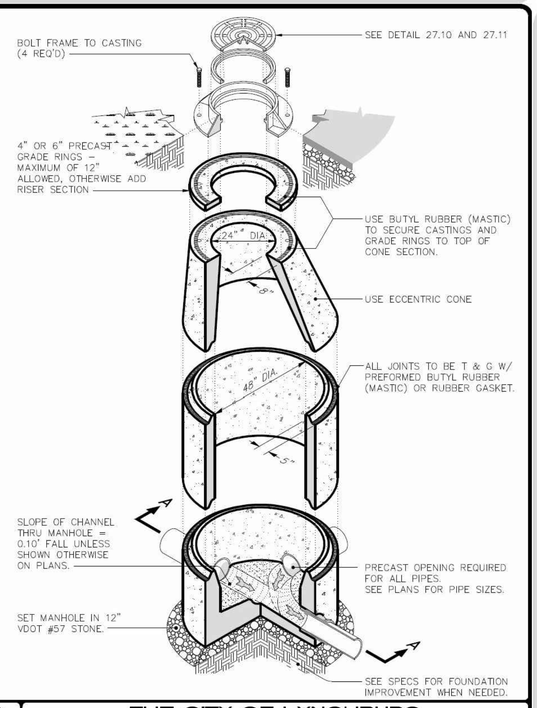

THE CITY OF LYNCHBURG

PRECAST CONCRETE 4' DIAMETER MANHOLE

USE WITH THE CITY OF LYNCHBURG STANDARD SPECIFICATIONS ONLY

SCALE:	DETAIL #
NOT TO SCALE	27.02
REVISION DATE: 12-14-2013	SHEET # 1 OF 2

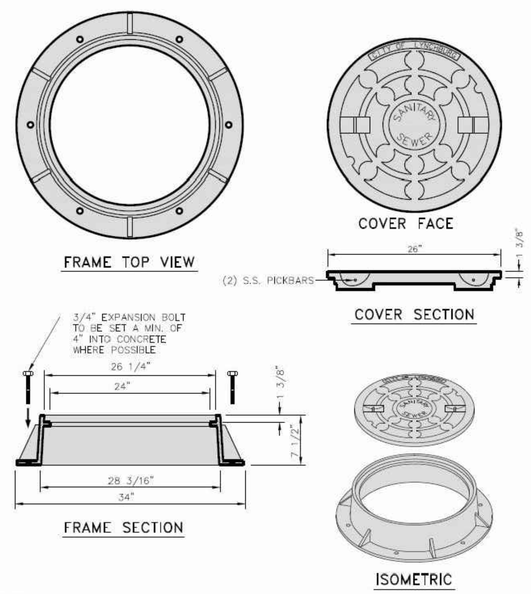

NOTES:

1. PARTS #'s: US FOUNDRY 710 RING AND DP COVER, EAST JORDAN IRON WORKS OR APPROVED EQUAL.
2. MANHOLE FRAMES AND COVERS SHALL BE ROADWAY TYPE WITH DEEP SOCKET COVERS. MACHINE FRAMES AND COVERS TO PREVENT RATTLING. CASTINGS SHALL BE GRAY IRON MEETING REQUIREMENTS OF ASTM A48, CLASS 30.

THE CITY OF LYNCHBURG

STANDARD MANHOLE FRAME and COVER

USE WITH THE CITY OF LYNCHBURG STANDARD SPECIFICATIONS ONLY

SCALE:	DETAIL #
NOT TO SCALE	27.10
REVISION DATE: 12-14-2013	SHEET # 1 OF 1

NOTE: DRIVEWAYS THAT ARE DISTURBED DUE TO ANY CONSTRUCTION ACTIVITIES SHALL BE REPLACED IN LIKE KIND TO EQUAL OR BETTER CONDITIONS.

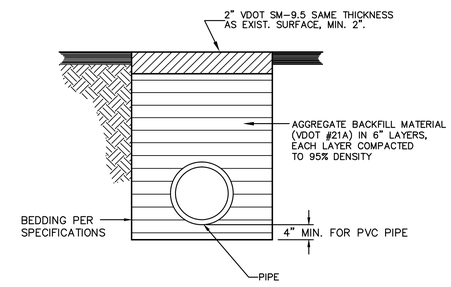

TYPICAL CROSS SECTION

OPEN CUT PAVED DRIVEWAY CROSSING

NOT TO SCALE

NOTE: IF EXISTING CULVERTS ARE DISTURBED THEY SHALL BE REMOVED AND REPLACED WITH NEW CULVERTS OF SIMILAR SIZE AND MATERIAL.

APPROVALS

CITY ENGINEER

UTILITY ENGINEER

COMMONWEALTH OF VIRGINIA
SCOTT A. SCHILLER
Lic. No. 048071
7/25/14
PROFESSIONAL ENGINEER

Draper Aden Associates
Engineering • Surveying • Environmental Services
Blacksburg, VA
2905 South Main Street
Blacksburg, VA 24060
540-552-4444 Fax: 540-552-0291
www.daa.com
Richmond, VA
Charlottesville, VA
Hampton Roads, VA

DETAILS
BLUE RIDGE FARMS WATER, SANITARY, & STORM SEWER IMPROVEMENTS - PHASE 2
LYNCHBURG, VIRGINIA

REVISIONS

DESIGNED BY:	LMR/BMC
DRAWN BY:	BMC
CHECKED BY:	JST/MSH/SAS
SCALE:	AS SHOWN
DATE:	07/25/2014
PROJECT NUMBER:	B09223B-06

D-4

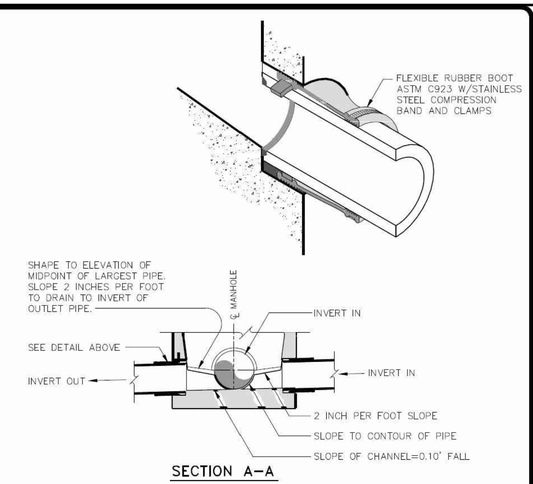

NOTES:

1. MAXIMUM DEPTH 4' DIAMETER MANHOLE = 20' (SEE SEWER DESIGN SECTION FOR OTHER REQUIREMENTS / LIMITATIONS).
2. THE INVERT SHAPING AS SHOWN SHALL CONSIST OF 3,000 PSI CONCRETE TROWELLED TO A SMOOTH SURFACE WITH NO AGGREGATE EXPOSED.
3. DETAILS OF INVERT SHAPING AS SHOWN HEREON ARE FOR EXAMPLE PURPOSES ONLY. EACH MANHOLE IS TO BE SHAPED INDIVIDUALLY TO BEST FIT THE PARTICULAR INLET AND OUTLET CONFIGURATION AND FLOW LINES.
4. WHEN DIFFERENT DIAMETER PIPES ARE USED FROM INVERT IN TO INVERT OUT, PROVIDE A SMOOTH TRANSITION THROUGH THE INVERT.

THE CITY OF LYNCHBURG

PRECAST CONCRETE 4' DIAMETER MANHOLE

USE WITH THE CITY OF LYNCHBURG STANDARD SPECIFICATIONS ONLY

SCALE:	DETAIL #:
NOT TO SCALE	27.02
REVISION DATE:	SHEET #:
12-14-2013	2 OF 2

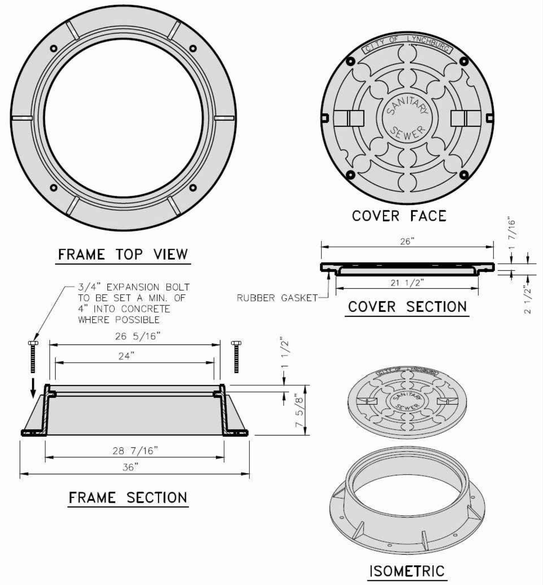

NOTES:

1. MANHOLE FRAMES AND COVERS SHALL BE ROADWAY TYPE WITH DEEP SOCKET COVERS. MACHINE FRAMES AND COVERS TO PREVENT RATTLING. CASTINGS SHALL BE GRAY IRON MEETING REQUIREMENTS OF ASTM A48, CLASS 30.

THE CITY OF LYNCHBURG

WATERPROOF MANHOLE FRAME and COVER

USE WITH THE CITY OF LYNCHBURG STANDARD SPECIFICATIONS ONLY

SCALE:	DETAIL #:
NOT TO SCALE	27.11
REVISION DATE:	SHEET #:
12-14-2013	1 OF 1

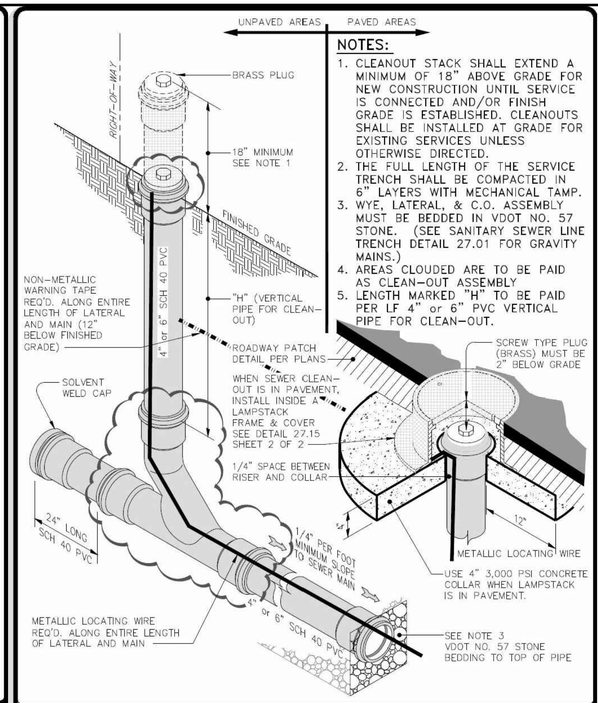

NOTES:

1. CLEANOUT STACK SHALL EXTEND A MINIMUM OF 18" ABOVE GRADE FOR NEW CONSTRUCTION UNTIL SERVICE IS CONNECTED AND/OR FINISH GRADE IS ESTABLISHED. CLEANOUTS SHALL BE INSTALLED AT GRADE FOR EXISTING SERVICES UNLESS OTHERWISE DIRECTED.
2. THE FULL LENGTH OF THE SERVICE TRENCH SHALL BE COMPACTED IN 6" LAYERS WITH MECHANICAL TAMP.
3. WYE, LATERAL, & C.O. ASSEMBLY MUST BE BEDDED IN VDOT NO. 57 STONE. (SEE SANITARY SEWER LINE TRENCH DETAIL 27.01 FOR GRAVITY MAINS.)
4. AREAS CLOUDED ARE TO BE PAID AS CLEAN-OUT ASSEMBLY
5. LENGTH MARKED "H" TO BE PAID PER LF 4" or 6" PVC VERTICAL PIPE FOR CLEAN-OUT.

THE CITY OF LYNCHBURG

TYPICAL PVC SEWER LATERAL CLEANOUT WITH IN-LINE WYE

USE WITH THE CITY OF LYNCHBURG STANDARD SPECIFICATIONS ONLY

SCALE:	DETAIL #:
NOT TO SCALE	27.15
REVISION DATE:	SHEET #:
12-14-2013	1 OF 2

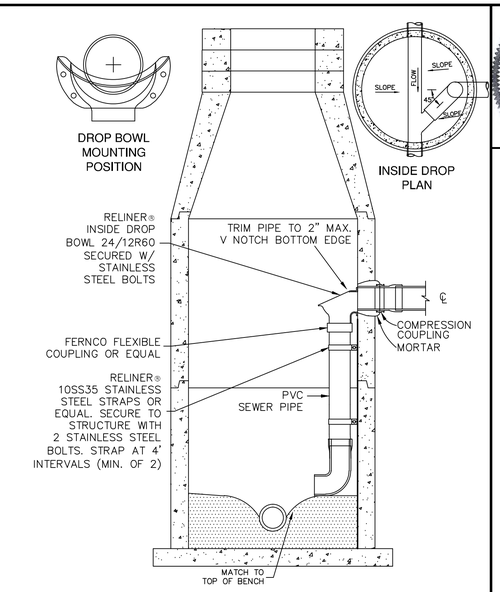

NOTES:

1. ALL INSIDE DROP CONNECTIONS FOR SERVICES AND COLLECTOR SEWERS SHALL USE THE DROP BOWL AS PRODUCED BY:
   RELINER-DURAN, INC.
   53 MT. ARCHER RD.
   LYME, CT 06371
   (860)434-0277 FAX: (860)434-3195
2. SECURE DROP PIPE TO MANHOLE WALL WITH RELINER-DURAN, INC STAINLESS STEEL ADJUSTABLE CLAMPING BRACKETS.

RELINER TYPE INSIDE DROP CONNECTION DETAIL

NOT TO SCALE

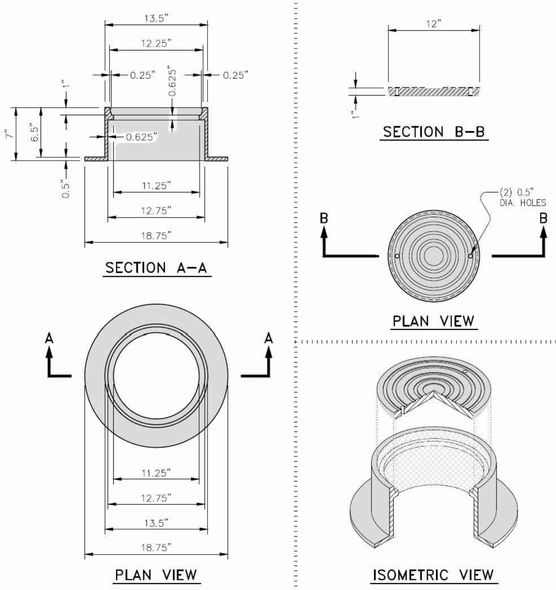

LAMPSTACK FRAME and COVER

THE CITY OF LYNCHBURG

TYPICAL PVC SEWER LATERAL CLEANOUT WITH IN-LINE WYE

USE WITH THE CITY OF LYNCHBURG STANDARD SPECIFICATIONS ONLY

SCALE:	DETAIL #:
NOT TO SCALE	27.15
REVISION DATE:	SHEET #:
12-14-2013	2 OF 2

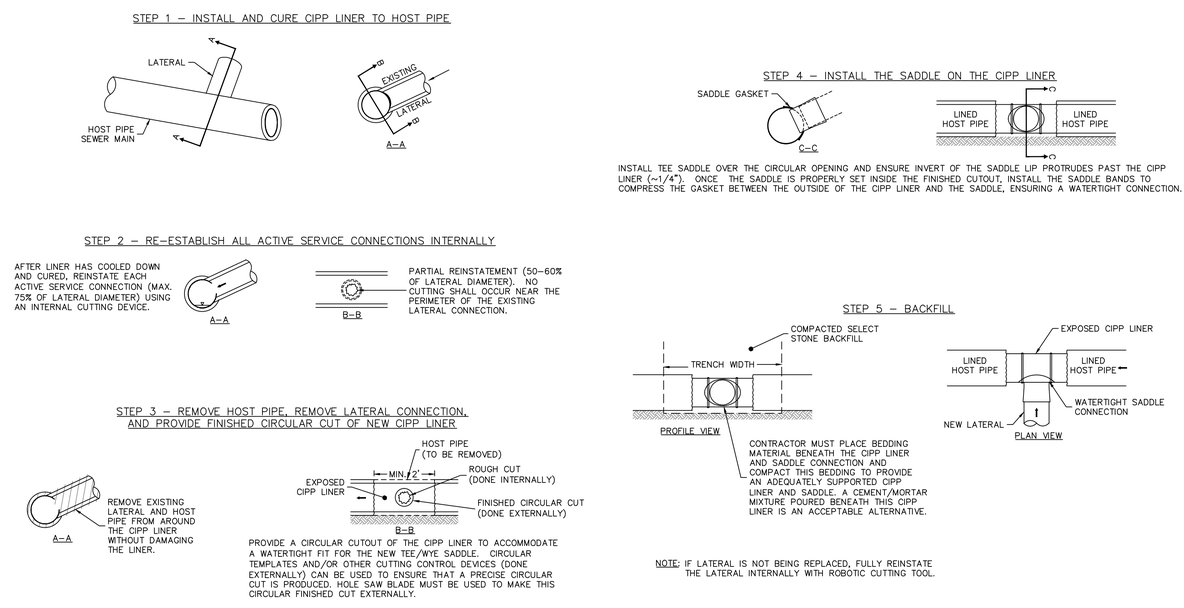

NOTE: IF LATERAL IS NOT BEING REPLACED, FULLY REINSTATE THE LATERAL INTERNALLY WITH ROBOTIC CUTTING TOOL.

LATERAL CONNECTION TO CIPP LINER DETAIL

NOT TO SCALE

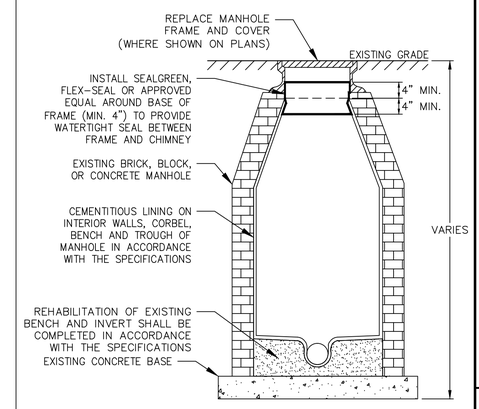

MANHOLE REHABILITATION DETAIL

NOT TO SCALE

APPROVALS

CITY ENGINEER

UTILITY ENGINEER

COMMONWEALTH OF VIRGINIA
SCOTT A. SCHILLER
Lic. No. 043071
7/25/14
PROFESSIONAL ENGINEER

Draper Aden Associates
Engineering • Surveying • Environmental Services
Blacksburg, VA
2905 South Main Street
Blacksburg, VA 24060
540-552-0444 Fax: 540-552-0291
www.daa.com
Richmond, VA
Charlottesville, VA
Hampton Roads, VA

DETAILS
BLUE RIDGE FARMS WATER, SANITARY, & STORM SEWER IMPROVEMENTS - PHASE 2
LYNCHBURG, VIRGINIA

REVISIONS

DESIGNED BY:	LMR/BMC
DRAWN BY:	BMC
CHECKED BY:	LMR
SCALE:	AS SHOWN
DATE:	07/25/2014
PROJECT NUMBER:	B09223B-06

EROSION & SEDIMENT CONTROL NARRATIVE
BLUE RIDGE FARMS AREA PHASE 2 WATERLINE AND SANITARY SEWER REHABILITATION/REPLACEMENT
CITY OF LYNCHBURG, VIRGINIA

A. PROJECT DESCRIPTION

Waterline Replacement – This project includes approximately 6,991 LF of 8" pipe, and 823 LF of 6" pipe and appurtenances.

Sewer Rehabilitation/Replacement – This project includes rehabilitation of approximately 2,300 lf of 8" pipe and 12 manholes, and replacement of approximately 1,370 lf of 8" pipe and 7 manholes.

The disturbed area is approximately 0.3 acres based on a disturbed width of 20 feet for sewer line outside of the pavement.

B. EXISTING SITE CONDITIONS

The Blue Ridge Farms neighborhood infrastructure was constructed during the 1950's and 1960's utilizing 2–inch, 4–inch and 6–inch asbestos cement pipe for water distribution and 8–inch clay pipe for sewer collection. It is important to minimize disturbance to private property within this residential neighborhood.

C. ADJACENT PROPERTY

Limits of construction shall be within the right–of–way except in one area of sewer replacement. In this area the limits of construction are shown on the plans. Adjacent properties are residential homes along the Right of Way. There is also an entrance to Peaks View Park on Ardmore Drive. Landscaping on private property adjacent to the right–of–way will need to be protected. No soil stockpiling shall occur in yards or in the road.

D. PLANNED EARTHWORK ACTIVITIES / OFF–SITE AREAS

The proposed waterline is located within the edges of pavement and the majority of sewer line will be rehabilitated in–situ or removed and replaced in the existing location. It is not anticipated that any off–site areas will be affected. If an off–site disposal area becomes necessary it is the contractor's responsibility to provide an Erosion and Sediment Control Plan.

E. SOILS

According to the SCS soils information from the NRCS Web Soil Survey the soils are Cullen loam: 2 to 6 percent slopes (41.2%), Cullen loam: 6 to 15 percent slopes (19.8%), Wilkes loam: 6 to 15 percent slopes (33.6%), Wilkes loam: 15 to 25 percent slopes (5.4%).

F. CRITICAL AREAS

1. Critical areas include: Culverts, areas downhill from the disturbed area, roadside ditches, residential entrances, landscaping and mailboxes
2. Ensure that all highway drainage pipes (including driveway culverts) remain free and clear of obstruction during the duration of the project.
3. Positive roadway drainage must be maintained throughout the duration of the project.
4. Replacement of damaged culverts and storm pipes will be the contractor's responsibility.

The proposed erosion and sediment control measures are intended to minimize any potential problems and promote stabilization.

G. EROSION AND SEDIMENT CONTROL MEASURES

All structural and vegetative erosion and sediment control practices will be constructed and maintained in accordance with the minimum standards and specifications of the "Virginia Erosion and Sediment Control Handbook" (VESCH), latest edition.

MINIMUM STANDARDS: All applicable Minimum Standards must be addressed.
Specifically:
1. Permanent or temporary soil stabilization shall be applied to denuded areas within seven days after final grade is reached on any portion of the site. Temporary soil stabilization shall be applied within seven days to denuded areas that may not be at final grade but will remain dormant (undisturbed) for longer than thirty (30) days. Permanent stabilization shall be applied to areas that are to be left dormant for more than one year.
2. Perimeter dikes and ditches, sediment barriers and other measures intended to trap sediment shall be constructed as a first step in any land disturbing activity and shall be made functional before land disturbance takes place.
3. Stabilization measures shall be applied to earthen structures such as dams, ditches, and diversions immediately after installation.
4. Where construction vehicle access routes intersect paved public roads, provisions shall be made to minimize the transport of sediment by (vehicular) tracking onto the paved surface. Where sediment is transported onto a public road surface, the road shall be cleaned thoroughly at the end of each day. Sediment shall be removed from the roads by shoveling or sweeping and transported to a sediment control disposal area. Street washing shall be allowed only after sediment is removed in this manner. This provision shall apply to individual subdivision lots as well as to larger land disturbing activities.
5. All temporary erosion and sediment control measures shall be removed within thirty (30) days after final site stabilization or after the temporary measures are no longer needed, unless otherwise authorized by the local program administrator. Trapped sediment and the disturbed soil areas resulting from the disposition of temporary measures shall be permanently stabilized to prevent further erosion and sedimentation.

H. STRUCTURAL PRACTICES

1. SILT FENCE – Std. & Spec. 3.05

Disturbed areas shall be lined with silt fence as shown on the plans to detain sediment and decrease storm water runoff velocity.

2. ROCK CHECK DAMS – STD & SPEC 3.20

Small temporary stone dams shall be constructed across the roadside ditch in the event they are needed to reduce the velocity of concentrated stormwater flows, thereby reducing erosion of the ditch.

3. SOIL STABILIZATION BLANKETS & MATTING – Std. & Spec 3.36

Blankets and matting shall be used in lieu of mulch for the entire project to aid in stabilization as required in grass lined ditches. Blankets and matting shall be VA E&SC Handbook Treatment 1 (VDOT specifications EC–2).

1. MS–16: UTILITY INSTALLATION

No more than 500 linear feet of utility trench may be opened at one time. Excavated material shall be placed on the uphill side of trenches. Effluent from dewatering operations shall be filtered or passed through approved sediment trapping device, or both, and discharged in a manner that does not adversely affect flowing streams or off–site property. Backfill material shall be properly compacted to minimize erosion and promote stabilization.

I. VEGETATIVE PRACTICES

GENERAL: A permanent vegetative cover shall be established on denuded areas not otherwise permanently stabilized by pavement. Permanent vegetation shall not be considered established until a ground cover is achieved that is uniform and mature enough to survive and will inhibit erosion. New vegetation shall be maintained at a minimum of one full year after planting. New seeding shall be supplied with adequate moisture, especially late in the season, and in abnormally hot or dry weather. Stabilization practices shall be accomplished in accordance with the appropriate VESCH Standard and Specification and the Erosion and Sediment Control Plan.

Permanent or temporary soil stabilization shall be applied to denuded areas within seven (7) days after final grade is reached on any portion of the site. Temporary soil stabilization shall be applied within seven (7) days to denuded areas that may not be at final grade but will remain dormant (undisturbed) for longer than 30 days. Permanent seeding shall be used on all areas that are not at final grade and that will be left dormant for a period of more than 1 year.

It is particularly important to expedite stabilization since the construction is in a residential neighborhood.

TEMPORARY SEEDING – STD & Spec 3.31

Temporary seeding shall be applied over cleared areas that will not be brought to final grade within 30 days. Temporary seeding mixes shall be as described on sheet ES–2.

PERMANENT SEEDING – STD. & SPEC 3.32

Permanent seeding is proposed over all cleared areas. Permanent seeding mixes shall be as described on sheet ES–2

J. MAINTENANCE PLAN

1. All erosion and sediment control practices will be checked for stability and operation following every runoff–producing rainfall and at least daily during prolonged rainfall. Any needed repairs will be made immediately to maintain all practices as designed.
2. Sediment will be removed from behind the silt fence when it becomes about half of the height of the barrier. The silt fence will be repaired as necessary to maintain a barrier.
3. All seeded areas will be fertilized and reseeded as necessary to maintain a dense vegetative cover.

K. STORMWATER CONSIDERATIONS
Since there are no proposed changes to the existing land use, there should be no changes in drainage patterns or volumes.

EROSION & SEDIMENT CONTROL MINIMUM STANDARDS.

MS–1 PERMANENT OR TEMPORARY SOIL STABILIZATION SHALL BE APPLIED TO DENUDED AREAS WITHIN SEVEN DAYS AFTER FINAL GRADE IS REACHED ON ANY PORTION OF THE SITE. TEMPORARY SOIL STABILIZATION SHALL BE APPLIED WITHIN SEVEN DAYS TO DENUDED AREAS THAT MAY NOT BE AT FINAL GRADE BUT WILL REMAIN DORMANT FOR LONGER THAN 30 DAYS. PERMANENT STABILIZATION SHALL BE APPLIED TO AREAS THAT ARE TO BE LEFT DORMANT FOR MORE THAN ONE YEAR.
-PERMANENT SEEDING SHALL BE APPLIED TO DISTURBED AREA AFTER EACH SECTION OF PIPE INSTALLATION IS COMPLETE. SEE EROSION AND SEDIMENT CONTROL NOTE ES-1.

MS–2 DURING CONSTRUCTION OF THE PROJECT, SOIL STOCKPILES AND BORROW AREAS SHALL BE STABILIZED OR PROTECTED WITH SEDIMENT TRAPPING MEASURES. THE APPLICANT IS RESPONSIBLE FOR THE TEMPORARY PROTECTION AND PERMANENT STABILIZATION OF ALL SOIL STOCKPILES ON SITE AS WELL AS BORROW AREAS AND SOIL INTENTIONALLY TRANSPORTED FROM THE PROJECT SITE.
-NOT APPLICABLE

MS–3 A PERMANENT VEGETATIVE COVER SHALL BE ESTABLISHED ON DENUDED AREAS NOT OTHERWISE PERMANENTLY STABILIZED. PERMANENT VEGETATION SHALL NOT BE CONSIDERED ESTABLISHED UNTIL A GROUND COVER IS ACHIEVED THAT IS UNIFORM, MATURE ENOUGH TO SURVIVE AND WILL INHIBIT EROSION. THAT ARE TO BE LEFT DORMANT FOR MORE THAN ONE YEAR.
-PERMANENT SEEDING SHALL BE APPLIED TO DISTURBED AREA AFTER EACH SECTION OF PIPE INSTALLATION IS COMPLETE.

MS–4 SEDIMENT BASINS AND TRAPS, PERIMETER DIKES, SEDIMENT BARRIERS AND OTHER MEASURES INTENDED TO TRAP SEDIMENT SHALL BE CONSTRUCTED AS A FIRST STEP IN ANY LAND–DISTURBING ACTIVITY AND SHALL BE MADE FUNCTIONAL BEFORE UPSLOPE LAND DISTURBANCE TAKES PLACE.
-SILT FENCE WILL BE USED IN AREAS OUTSIDE OF THE PAVEMENT FOR EROSION AND SEDIMENT CONTROL.

MS–5 STABILIZATION MEASURES SHALL BE APPLIED TO EARTHEN STRUCTURES SUCH AS DAMS, DIKES AND DIVERSIONS IMMEDIATELY AFTER INSTALLATION.
-NOT APPLICABLE

MS–6 SEDIMENT TRAPS AND SEDIMENT BASINS SHALL BE DESIGNED AND CONSTRUCTED BASED UPON THE TOTAL DRAINAGE AREA TO BE SERVED BY THE TRAP OR BASIN.
A. THE MINIMUM STORAGE CAPACITY OF A SEDIMENT TRAP SHALL BE 134 CUBIC YARDS PER ACRE OF DRAINAGE AREA AND THE TRAP SHALL ONLY CONTROL DRAINAGE AREAS LESS THAN THREE ACRES.
B. SURFACE RUNOFF FROM DISTURBED AREAS THAT IS COMPRISED OF FLOW FROM DRAINAGE AREAS GREATER THAN OR EQUAL TO THREE ACRES SHALL BE CONTROLLED BY A SEDIMENT BASIN. THE MINIMUM STORAGE CAPACITY OF A SEDIMENT BASIN SHALL BE 134 CUBIC YARDS PER ACRE OF DRAINAGE AREA. THE OUTFALL SYSTEM SHALL, AT A MINIMUM, MAINTAIN THE STRUCTURAL INTEGRITY OF THE BASIN DURING A 25–YEAR STORM OF 24–HOUR DURATION. RUNOFF COEFFICIENTS USED IN RUNOFF CALCULATIONS SHALL CORRESPOND TO A BARE EARTH CONDITION OR THOSE CONDITIONS EXPECTED TO EXIST WHILE THE SEDIMENT BASIN IS UTILIZED.
-NOT APPLICABLE

MS–7 CUT AND FILL SLOPES SHALL BE DESIGNED AND CONSTRUCTED IN A MANNER THAT WILL MINIMIZE EROSION. SLOPES THAT ARE FOUND TO BE ERODING EXCESSIVELY WITHIN ONE YEAR OF PERMANENT STABILIZATION SHALL BE PROVIDED WITH ADDITIONAL SLOPE STABILIZING MEASURES UNTIL THE PROBLEM IS CORRECTED.
-NOT APPLICABLE

MS–8 CONCENTRATED RUNOFF SHALL NOT FLOW DOWN CUT OR FILL SLOPES UNLESS CONTAINED WITHIN AN ADEQUATE TEMPORARY OR PERMANENT CHANNEL, FLUME OR SLOPE DRAIN STRUCTURE.
-NOT APPLICABLE

MS–9 WHENEVER WATER SEEPS FROM A SLOPE FACE, ADEQUATE DRAINAGE OR OTHER PROTECTION SHALL BE PROVIDED.
-NOT APPLICABLE

MS–10 ALL STORM SEWER INLETS THAT ARE MADE OPERABLE DURING CONSTRUCTION SHALL BE PROTECTED SO THAT SEDIMENT–LADEN WATER CANNOT ENTER THE CONVEYANCE SYSTEM WITHOUT FIRST BEING FILTERED OR OTHERWISE TREATED TO REMOVE SEDIMENT.
-NOT APPLICABLE

MS–11 BEFORE NEWLY CONSTRUCTED STORMWATER CONVEYANCE CHANNELS OR PIPES ARE MADE OPERATIONAL, ADEQUATE OUTLET PROTECTION AND ANY REQUIRED TEMPORARY OR PERMANENT CHANNEL LINING SHALL BE INSTALLED IN BOTH THE CONVEYANCE CHANNEL AND RECEIVING CHANNEL.
-NOT APPLICABLE

MS–12 WHEN WORK IN A LIVE WATERCOURSE IS PERFORMED, PRECAUTIONS SHALL BE TAKEN TO MINIMIZE ENCROACHMENT, CONTROL SEDIMENT TRANSPORT AND STABILIZE THE WORK AREA TO THE GREATEST EXTENT POSSIBLE DURING CONSTRUCTION. NONERODIBLE MATERIAL SHALL BE USED FOR THE CONSTRUCTION OF CAUSEWAYS AND COFFERDAMS. EARTHEN FILL MAY BE USED FOR THESE STRUCTURES IF ARMORED BY NONERODIBLE COVER MATERIALS.
-NOT APPLICABLE

MS–13 WHEN A LIVE WATERCOURSE MUST BE CROSSED BY CONSTRUCTION VEHICLES MORE THAN TWICE IN ANY SIX–MONTH PERIOD, A TEMPORARY VEHICULAR STREAM CROSSING CONSTRUCTED OF NONERODIBLE MATERIAL SHALL BE PROVIDED.
-NOT APPLICABLE

MS–14 ALL APPLICABLE FEDERAL, STATE AND LOCAL REGULATIONS PERTAINING TO WORKING IN OR CROSSING LIVE WATERCOURSES SHALL BE MET.
-NOT APPLICABLE

MS–15 THE BED AND BANKS OF A WATERCOURSE SHALL BE STABILIZED IMMEDIATELY AFTER WORK IN THE WATERCOURSE IS COMPLETED.
-NOT APPLICABLE

MS–16 UNDERGROUND UTILITY LINES SHALL BE INSTALLED IN ACCORDANCE WITH THE FOLLOWING STANDARDS IN ADDITION TO OTHER APPLICABLE CRITERIA:
A. NO MORE THAN 500 LINEAR FEET OF TRENCH MAY BE OPENED AT ONE TIME.
B. EXCAVATED MATERIAL SHALL BE PLACED ON THE UPHILL SIDE OF TRENCHES.
C. EFFLUENT FROM DEWATERING OPERATIONS SHALL BE FILTERED OR PASSED THROUGH AN APPROVED SEDIMENT TRAPPING DEVICE, OR BOTH, AND DISCHARGED IN A MANNER THAT DOES NOT ADVERSELY AFFECT FLOWING STREAMS OR OFF–SITE PROPERTY.
D. MATERIAL USED FOR BACKFILLING TRENCHES SHALL BE PROPERLY COMPACTED IN ORDER TO MINIMIZE EROSION AND PROMOTE STABILIZATION.
E. RESTABILIZATION SHALL BE ACCOMPLISHED IN ACCORDANCE WITH THESE REGULATIONS.
F. APPLICABLE SAFETY REGULATIONS SHALL BE COMPLIED WITH.

MS–17 WHERE CONSTRUCTION VEHICLE ACCESS ROUTES INTERSECT PAVED OR PUBLIC ROADS, PROVISIONS SHALL BE MADE TO MINIMIZE THE TRANSPORT OF SEDIMENT BY VEHICULAR TRACKING ONTO THE PAVED SURFACE. WHERE SEDIMENT IS TRANSPORTED ONTO A PAVED OR PUBLIC ROAD SURFACE, THE ROAD SURFACE SHALL BE CLEANED THOROUGHLY AT THE END OF EACH DAY. SEDIMENT SHALL BE REMOVED FROM THE ROADS BY SHOVELING OR SWEEPING AND TRANSPORTED TO A SEDIMENT CONTROL DISPOSAL AREA. STREET WASHING SHALL BE ALLOWED ONLY AFTER SEDIMENT IS REMOVED IN THIS MANNER. THIS PROVISION SHALL APPLY TO INDIVIDUAL DEVELOPMENT LOTS AS WELL AS TO LARGER LAND–DISTURBING ACTIVITIES.
- STREETS TO REMAIN CLEAN - IT SHALL BE THE RESPONSIBILITY OF THE CONTRACTOR TO INSURE THAT THE PUBLIC STREET ADJACENT TO THE CONSTRUCTION ENTRANCE REMAINS FREE OF MUD, DIRT, DUST, AND/OR ANY TYPE OF CONSTRUCTION MATERIALS OR LITTER AT ALL TIMES. SEE GENERAL NOTE 20 ON SHEET T-2.

MS–18 ALL TEMPORARY EROSION AND SEDIMENT CONTROL MEASURES SHALL BE REMOVED WITHIN 30 DAYS AFTER FINAL SITE STABILIZATION OR AFTER THE TEMPORARY MEASURES ARE NO LONGER NEEDED, UNLESS OTHERWISE AUTHORIZED BY THE LOCAL PROGRAM AUTHORITY. TRAPPED SEDIMENT AND THE DISTURBED SOIL AREAS RESULTING FROM THE DISPOSITION OF TEMPORARY MEASURES SHALL BE PERMANENTLY STABILIZED TO PREVENT FURTHER EROSION AND SEDIMENTATION.
- SEE EROSION AND SEDIMENT CONTROL NOTE ES-1.

MS–19 PROPERTIES AND WATERWAYS DOWNSTREAM FROM DEVELOPMENT SITES SHALL BE PROTECTED FROM SEDIMENT DEPOSITION, EROSION AND DAMAGE DUE TO INCREASES IN VOLUME, VELOCITY AND PEAK FLOW RATE OF STORMWATER RUNOFF FOR THE STATED FREQUENCY STORM OF 24–HOUR DURATION IN ACCORDANCE WITH THE FOLLOWING STANDARDS AND CRITERIA:

A. CONCENTRATED STORMWATER RUNOFF LEAVING A DEVELOPMENT SITE SHALL BE DISCHARGED DIRECTLY INTO AN ADEQUATE NATURAL OR MAN–MADE RECEIVING CHANNEL, PIPE OR STORM SEWER SYSTEM. FOR THOSE SITES WHERE RUNOFF IS DISCHARGED INTO A PIPE OR PIPE SYSTEM, DOWNSTREAM STABILITY ANALYSES AT THE OUTFALL OF THE PIPE OR PIPE SYSTEM SHALL BE PERFORMED.

B. ADEQUACY OF ALL CHANNELS AND PIPES SHALL BE VERIFIED IN THE FOLLOWING MANNER:
(1) THE APPLICANT SHALL DEMONSTRATE THAT THE TOTAL DRAINAGE AREA TO THE POINT OF ANALYSIS WITHIN THE CHANNEL IS ONE HUNDRED TIMES GREATER THAN THE CONTRIBUTING DRAINAGE AREA OF THE PROJECT IN QUESTION; OR
(2) (A) NATURAL CHANNELS SHALL BE ANALYZED BY THE USE OF A TWO–YEAR STORM TO VERIFY THAT STORMWATER WILL NOT OVERTOP CHANNEL BANKS NOR CAUSE EROSION OF CHANNEL BED OR BANKS.
(B) ALL PREVIOUSLY CONSTRUCTED MAN–MADE CHANNELS SHALL BE ANALYZED BY THE USE OF A TEN–YEAR STORM TO VERIFY THAT STORMWATER WILL NOT OVERTOP ITS BANKS AND BY THE USE OF A TWO–YEAR STORM TO DEMONSTRATE THAT STORMWATER WILL NOT CAUSE EROSION OF CHANNEL BED OR BANKS; AND
(C) PIPES AND STORM SEWER SYSTEMS SHALL BE ANALYZED BY THE USE OF A TEN–YEAR STORM TO VERIFY THAT STORMWATER WILL BE CONTAINED WITHIN THE PIPE OR SYSTEM.

C. IF EXISTING NATURAL RECEIVING CHANNELS OR PREVIOUSLY CONSTRUCTED MAN–MADE CHANNELS OR PIPES ARE NOT ADEQUATE, THE APPLICANT SHALL:
(1) IMPROVE THE CHANNELS TO A CONDITION WHERE A TEN–YEAR STORM WILL NOT OVERTOP THE BANKS AND A TWO–YEAR STORM WILL NOT CAUSE EROSION TO THE CHANNEL BED OR BANKS; OR
(2) IMPROVE THE PIPE OR PIPE SYSTEM TO A CONDITION WHERE THE TEN–YEAR STORM IS CONTAINED WITHIN THE APPURTENANCES; OR
(3) DEVELOP A SITE DESIGN THAT WILL NOT CAUSE THE PRE–DEVELOPMENT PEAK RUNOFF RATE FROM A TWO–YEAR STORM TO INCREASE WHEN RUNOFF OUTFALLS INTO A NATURAL CHANNEL OR WILL NOT CAUSE THE PRE–DEVELOPMENT PEAK RUNOFF RATE FROM A TEN–YEAR STORM TO INCREASE WHEN RUNOFF OUTFALLS INTO A MAN–MADE CHANNEL; OR
(4) PROVIDE A COMBINATION OF CHANNEL IMPROVEMENT, STORMWATER DETENTION OR OTHER MEASURES WHICH IS SATISFACTORY TO THE PLAN–APPROVING AUTHORITY TO PREVENT DOWNSTREAM EROSION.

D. THE APPLICANT SHALL PROVIDE EVIDENCE OF PERMISSION TO MAKE THE IMPROVEMENTS.

E. ALL HYDROLOGIC ANALYSES SHALL BE BASED ON THE EXISTING WATERSHED CHARACTERISTICS AND THE ULTIMATE DEVELOPMENT OF THE SUBJECT PROJECT.

F. IF THE APPLICANT CHOOSES AN OPTION THAT INCLUDES STORMWATER DETENTION, HE SHALL OBTAIN APPROVAL FROM THE LOCALITY OF A PLAN FOR MAINTENANCE OF THE DETENTION FACILITIES. THE PLAN SHALL SET FORTH THE MAINTENANCE REQUIREMENTS OF THE FACILITY AND THE PERSON RESPONSIBLE FOR PERFORMING THE MAINTENANCE.

G. OUTFALL FROM A DETENTION FACILITY SHALL BE DISCHARGED TO A RECEIVING CHANNEL, AND ENERGY DISSIPATORS SHALL BE PLACED AT THE OUTFALL OF ALL DETENTION FACILITIES AS NECESSARY TO PROVIDE A STABILIZED TRANSITION FROM THE FACILITY TO THE RECEIVING CHANNEL.

H. ALL ON–SITE CHANNELS MUST BE VERIFIED TO BE ADEQUATE.

I. INCREASED VOLUMES OF SHEET FLOWS THAT MAY CAUSE EROSION OR SEDIMENTATION ON ADJACENT PROPERTY SHALL BE DIVERTED TO A STABLE OUTLET, ADEQUATE CHANNEL, PIPE OR PIPE SYSTEM, OR TO A DETENTION FACILITY.

J. IN APPLYING THESE STORMWATER MANAGEMENT CRITERIA, INDIVIDUAL LOTS OR PARCELS IN A RESIDENTIAL, COMMERCIAL OR INDUSTRIAL DEVELOPMENT SHALL NOT BE CONSIDERED TO BE SEPARATE DEVELOPMENT PROJECTS. INSTEAD, THE DEVELOPMENT, AS A WHOLE, SHALL BE CONSIDERED TO BE A SINGLE DEVELOPMENT PROJECT. HYDROLOGIC PARAMETERS THAT REFLECT THE ULTIMATE DEVELOPMENT CONDITION SHALL BE USED IN ALL ENGINEERING CALCULATIONS.

K. ALL MEASURES USED TO PROTECT PROPERTIES AND WATERWAYS SHALL BE EMPLOYED IN A MANNER WHICH MINIMIZES IMPACTS ON THE PHYSICAL, CHEMICAL AND BIOLOGICAL INTEGRITY OF RIVERS, STREAMS AND OTHER WATERS OF THE STATE.
-NOT APPLICABLE

EROSION & SEDIMENT CONTROL

STANDARD EROSION & SEDIMENT CONTROL NOTES:

ES–1: UNLESS OTHERWISE INDICATED, ALL VEGETATIVE AND STRUCTURAL EROSION & SEDIMENT CONTROL PRACTICES WILL BE CONSTRUCTED AND MAINTAINED ACCORDING TO MINIMUM STANDARDS & SPECIFICATIONS OF THE VIRGINIA EROSION & SEDIMENT CONTROL HANDBOOK & VIRGINIA REGULATIONS VR 625–02–00 EROSION & SEDIMENT CONTROL REGULATIONS.

ES–2: THE PLAN APPROVING AUTHORITY MUST BE NOTIFIED ONE WEEK PRIOR TO THE PRE–CONSTRUCTION CONFERENCE, ONE WEEK PRIOR TO THE COMMENCEMENT OF LAND DISTURBING ACTIVITY, & ONE WEEK PRIOR TO THE FINAL INSPECTION.

ES–3: ALL EROSION & SEDIMENT CONTROL MEASURES ARE TO BE PLACED PRIOR TO OR AS THE FIRST STEP IN CLEARING.

ES–4: A COPY OF THE APPROVED EROSION & SEDIMENT CONTROL PLAN SHALL BE MAINTAINED ON THE SITE AT ALL TIMES.

ES–5: PRIOR TO COMMENCING LAND DISTURBING ACTIVITIES IN AREAS OTHER THAN INDICATED ON THESE PLANS (INCLUDING, BUT NOT LIMITED TO, OFF–SITE BORROW OR WASTE AREAS), THE CONTRACTOR SHALL SUBMIT A SUPPLEMENTARY EROSION CONTROL PLAN TO THE OWNER FOR REVIEW & APPROVAL BY THE PLAN APPROVING AUTHORITY.

ES–6: THE CONTRACTOR IS RESPONSIBLE FOR INSTALLATION OF ANY ADDITIONAL EROSION CONTROL MEASURES NECESSARY TO PREVENT EROSION & SEDIMENTATION AS DETERMINED BY THE PLAN APPROVING AUTHORITY.

ES–7: ALL DISTURBED AREAS ARE TO DRAIN TO APPROVED SEDIMENT CONTROL MEASURES AT ALL TIMES DURING LAND DISTURBING ACTIVITIES & DURING SITE DEVELOPMENT UNTIL FINAL STABILIZATION IS ACHIEVED.

ES–8: DURING DEWATERING OPERATIONS, WATER WILL BE PUMPED INTO AN APPROVED FILTERING DEVICE.

ES–9: THE CONTRACTOR SHALL INSPECT ALL EROSION CONTROL MEASURES PERIODICALLY AND AFTER EACH RUNOFF–PRODUCING RAINFALL EVENT. ANY NECESSARY REPAIRS OR CLEANUP TO MAINTAIN THE EFFECTIVENESS OF THE EROSION CONTROL DEVICES SHALL BE MADE IMMEDIATELY.

CONTRACTOR SHALL HAVE REGISTERED LAND DISTURBER FOR EROSION & SEDIMENT CONTROL.

SEEDING NOTES:

1) SEEDING SHALL BE IN ACCORDANCE WITH THE SPECIFICATIONS.

2) WHEN PERMANENT SEEDING CANNOT OCCUR AT THE PROPER TIME, TEMPORARY SEEDING WILL BE PERFORMED TO BE FOLLOWED BY PERMANENT SEEDING.

APPROVALS

CITY ENGINEER

UTILITY ENGINEER

COMMONWEALTH OF VIRGINIA
SCOTT A. SCHILLER
Lic. No. 048071
7/25/14
PROFESSIONAL ENGINEER

Draper Aden Associates
Engineering • Surveying • Environmental Services
Blacksburg, VA
2206 South Main Street
Blacksburg, VA 24060
540-552-0444 Fax: 540-552-0291
www.daa.com
Richmond, VA
Charlottesville, VA
Hampton Roads, VA

EROSION AND SEDIMENT CONTROL NOTES
BLUE RIDGE FARMS WATER, SANITARY, & STORM SEWER IMPROVEMENTS - PHASE 2
LYNCHBURG, VIRGINIA

REVISIONS

DESIGNED BY:	LMR/BMC
DRAWN BY:	BMC
CHECKED BY:	JST/MSH/SAS
SCALE:	NOT TO SCALE
DATE:	07/25/2014
PROJECT NUMBER:	B09223B-06

ES-1

P:\B09\200\B09223B\B09223B-06\CAD\B09223B-06_DSN\ES-1 EROSION DETAILS.dwg July 25, 2014 10:02:58 AM

GENERAL SLOPE (3:1 OR LESS)	TOTAL LBS PER ACRE
RED FESCUE "FLYER"	215 LBS.
KENTUCKY BLUEGRASS	10 LBS.
RED TOP GRASS	10 LBS.
SEASONAL NURSE CROP	30 LBS.
WHITE CLOVER	2 LBS.
	267 LBS.

SEASONAL NURSE CROP

MARCH, APRIL THROUGH MAY 15	ANNUAL RYE
MAY 16 THROUGH AUGUST 15	FOXTAIL MILLET
AUGUST 16 THROUGH SEPTEMBER,OCTOBER	ANNUAL RYE
NOVEMBER THROUGH FEBRUARY	WINTER RYE

LIME AND FERTILIZER NEEDS SHALL BE DETERMINED BY SOIL TESTS.

SEEDINGS TO BE MULCHED AT THE RATE OF 2 TONS PER ACRE WITH TACKIFIED STRAW, IMMEDIATELY UPON COMPLETION OF SEED APPLICATION, IN ACCORDANCE W/ VA E&S STD 3.35.

(PS) PERMANENT SEEDING SCHEDULE

ACCEPTABLE TEMPORARY SEEDING PLANT MATERIALS

PLANTING DATES	SPECIES	RATE (LBS/ACRE)
SEPT 1–FEB 15	50/50 MIX OF ANNUAL RYEGRASS (LOLIUM MULTI–FLORUM) & CEREAL (WINTER) RYE (SECALE CEREALE)	50–100
FEB 16–APR 20	ANNUAL RYEGRASS (LOLIUM MULTI–FLORUM)	60–100
MAY 1–AUG 31	GERMAN MILLET (SETARIA ITALICA)	50

SEEDINGS MADE IN FALL FOR WINTER COVER AND DURING HOT AND DRY SUMMER MONTHS SHALL BE MULCHED IMMEDIATELY UPON COMPLETION OF SEED APPLICATION WITH TACKIFIED STRAW, IN ACCORDANCE WITH VA E&S STD 3.35.

(TS) TEMPORARY SEEDING SCHEDULE

SEEDING SCHEDULES

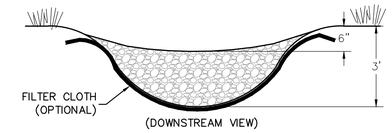

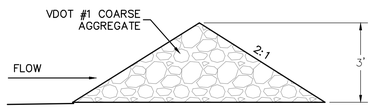

2 ACRES OR LESS OF DRAINAGE AREA

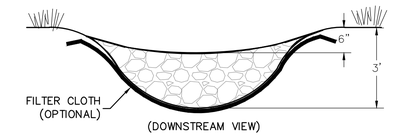

2–10 ACRES OF DRAINAGE AREA

(CD) ROCK CHECK DAM DETAIL
NOT TO SCALE

L = THE DISTANCE SUCH THAT POINTS A AND B ARE OF EQUAL ELEVATION

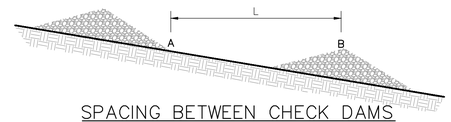

SPACING BETWEEN CHECK DAMS
NOT TO SCALE

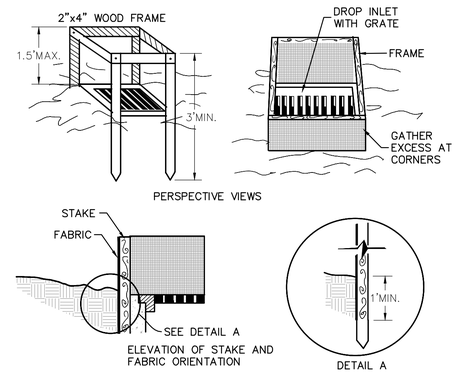

SPECIFIC APPLICATION

THIS METHOD OF INLET PROTECTION IS APPLICABLE WHERE THE INLET DRAINS A RELATIVELY FLAT AREA (SLOPE NO GREATER THAN 5%) WHERE THE INLET SHEET OR OVERLAND FLOWS (NOT EXCEEDING 1 C.F.S.) ARE TYPICAL. THE METHOD SHALL NOT APPLY TO INLETS RECEIVING CONCENTRATED FLOWS, SUCH AS IN STREET OR HIGHWAY MEDIANS.

(IP) SILT FENCE DROP INLET PROTECTION
NOT TO SCALE

EROSION & SEDIMENT CONTROL LEGEND

No.	TITLE	KEY	SYMBOL
3.05	SILT FENCE	SF	
3.07	STORM DRAIN INLET PROTECTION	IP	
3.08	CULVERT INLET PROTECTION	CIP	
3.20	ROCK CHECK DAM	CD	
3.31	TEMPORARY SEEDING	TS	TS
3.32	PERMANENT SEEDING	PS	PS

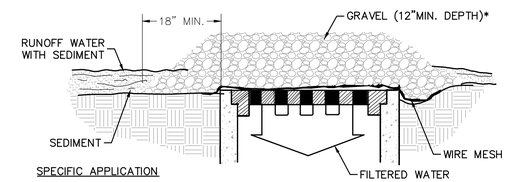

SPECIFIC APPLICATION

THIS METHOD OF INLET PROTECTION IS APPLICABLE WHERE HEAVY CONCENTRATED FLOWS ARE EXPECTED BUT NOT WHERE PONDING AROUND THE STRUCTURE MIGHT CAUSE EXCESSIVE INCONVENIENCE OR DAMAGE TO ADJACENT STRUCTURES AND UNPROTECTED AREAS.

* GRAVEL SHALL BE VDOT #3, #357 OR #5 COARSE AGGREGATE.

(IP) GRAVEL AND WIRE MESH DROP INLET FILTER
NOT TO SCALE

CONSTRUCTION OF A SILT FENCE (WITHOUT WIRE SUPPORT)

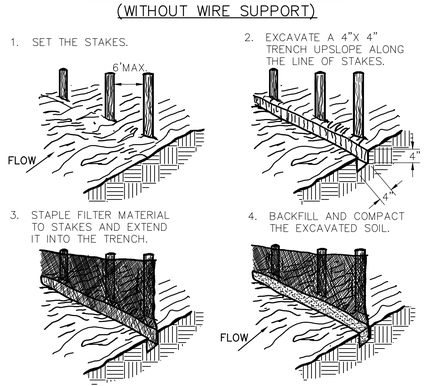

SHEET FLOW INSTALLATION
(PERSPECTIVE VIEW)

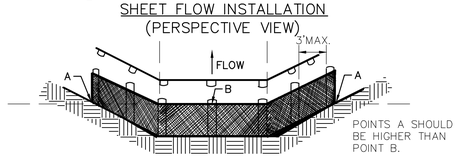

DRAINAGEWAY INSTALLATION
(FRONT ELEVATION)

(SF) SILT FENCE
NO SCALE

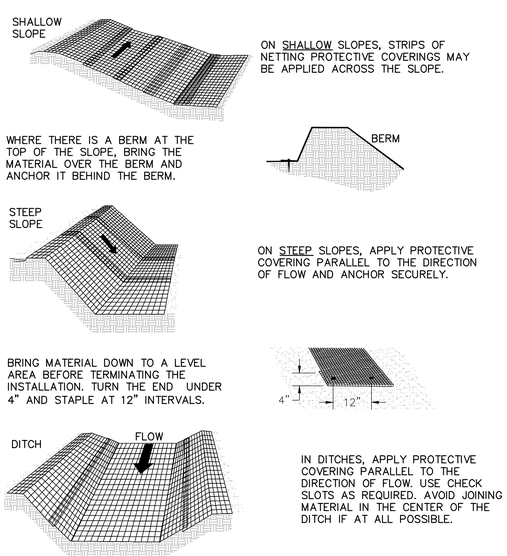

(B/M) SOIL STABILIZATION BLANKET – TREATMENT 1 (VDOT EC–2)
NOT TO SCALE

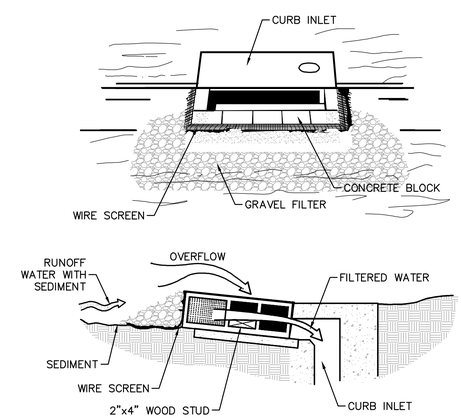

SPECIAL APPLICATION

THIS METHOD OF INLET PROTECTION IS APPLICABLE AT CURB INLETS WHERE AN OVERFLOW CAPABILITY IS NECESSARY TO PREVENT EXCESSIVE PONDING IN FRONT OF THE STRUCTURE.

* GRAVEL SHALL BE VDOT #3, #357 OR #5 COARSE AGGREGATE

(IP) BLOCK AND GRAVEL DROP INLET SEDIMENT FILTER
NOT TO SCALE

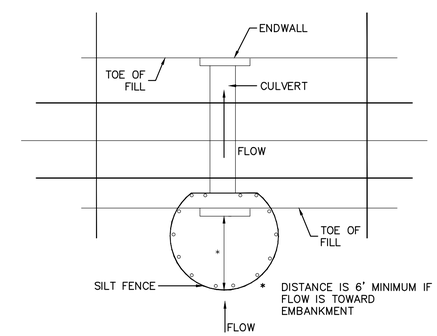

OPTIONAL STONE COMBINATION

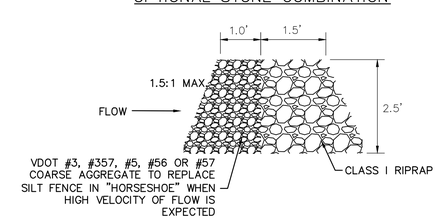

(CIP) CULVERT INLET PROTECTION
NOT TO SCALE

APPROVALS

CITY ENGINEER

UTILITY ENGINEER

COMMONWEALTH OF VIRGINIA
SCOTT A. SCHILLER
Lic. No. 043071
7/25/14
PROFESSIONAL ENGINEER

Draper Aden Associates
Engineering • Surveying • Environmental Services
Blacksburg, VA
2905 South Main Street
Blacksburg, VA 24060
540-552-4444 Fax: 540-552-0291
www.daa.com
Richmond, VA
Charlottesville, VA
Hampton Roads, VA

EROSION AND SEDIMENT CONTROL DETAILS
BLUE RIDGE FARMS WATER, SANITARY, & STORM SEWER IMPROVEMENTS - PHASE 2
LYNCHBURG, VIRGINIA

REVISIONS

DESIGNED BY:	LMR/BMC
DRAWN BY:	BMC
CHECKED BY:	JST/MSH/SAS
SCALE:	NOT TO SCALE
DATE:	07/25/2014
PROJECT NUMBER:	B09223B-06

ES-2

P:\B09223B\B09223B B09223B-06 CAD\B09223B-06_SDP(ES-1 EROSION DETAILS.dwg July 25, 2014 10:00:37 AM

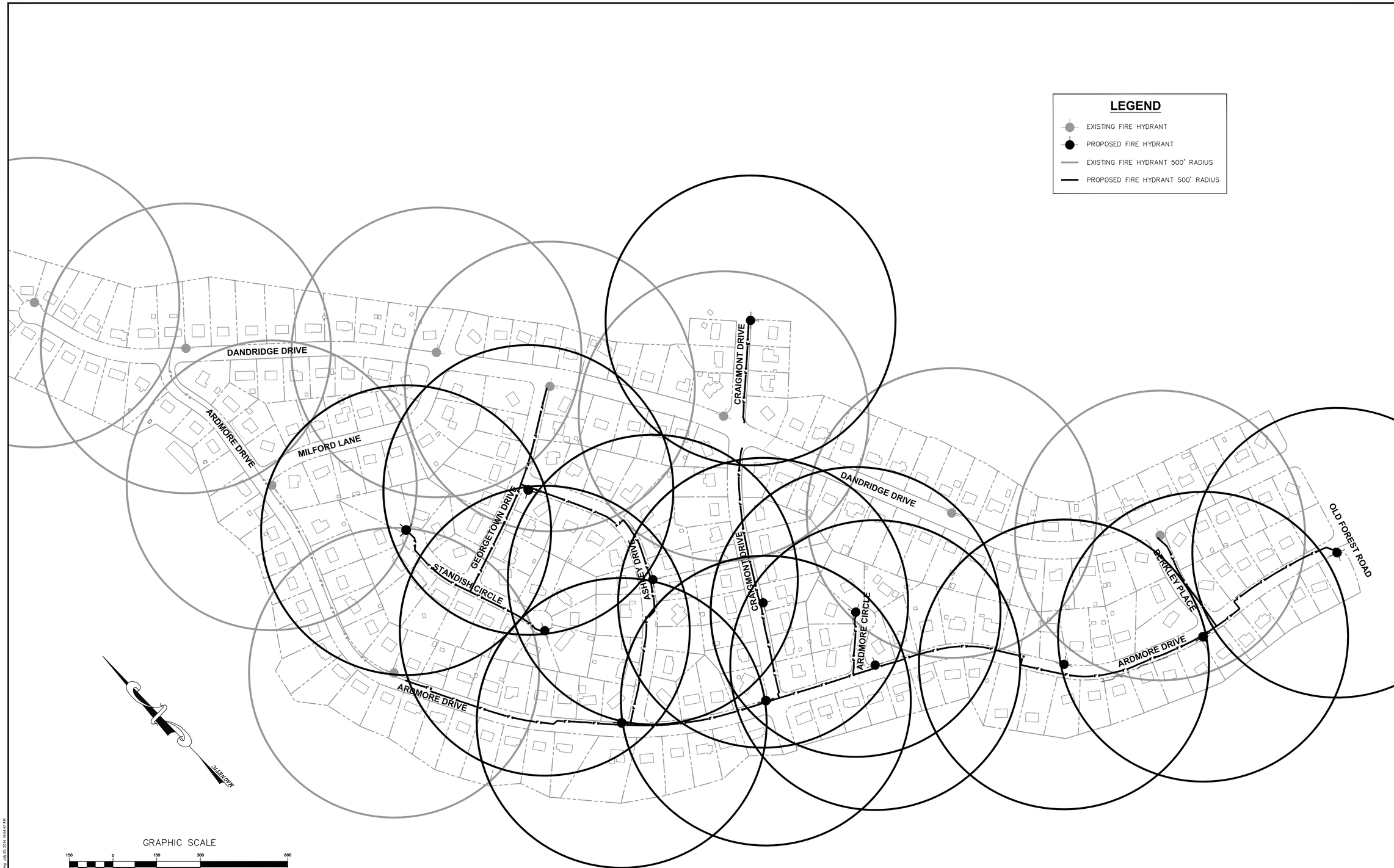

APPROVALS

CITY ENGINEER

UTILITY ENGINEER

COMMONWEALTH OF VIRGINIA
SCOTT A. SCHILLER
Lic. No. 048071
7/25/14
PROFESSIONAL ENGINEER

Draper Aden Associates
Engineering • Surveying • Environmental Services

Blacksburg, VA
2905 South Main Street
Blacksburg, VA 24060
540-552-0444 Fax: 540-552-0281
www.daa.com

Richmond, VA
Charlottesville, VA
Hampton Roads, VA

FIRE HYDRANT COVERAGE MAP
BLUE RIDGE FARMS WATER, SANITARY, & STORM SEWER IMPROVEMENTS - PHASE 2

LYNCHBURG, VIRGINIA

REVISIONS

DESIGNED BY:	LMR/BMC
DRAWN BY:	BMC
CHECKED BY:	JST/MSH/SAS
SCALE:	1"=150'
DATE:	07/25/2014
PROJECT NUMBER:	B09223B-06

FH-1