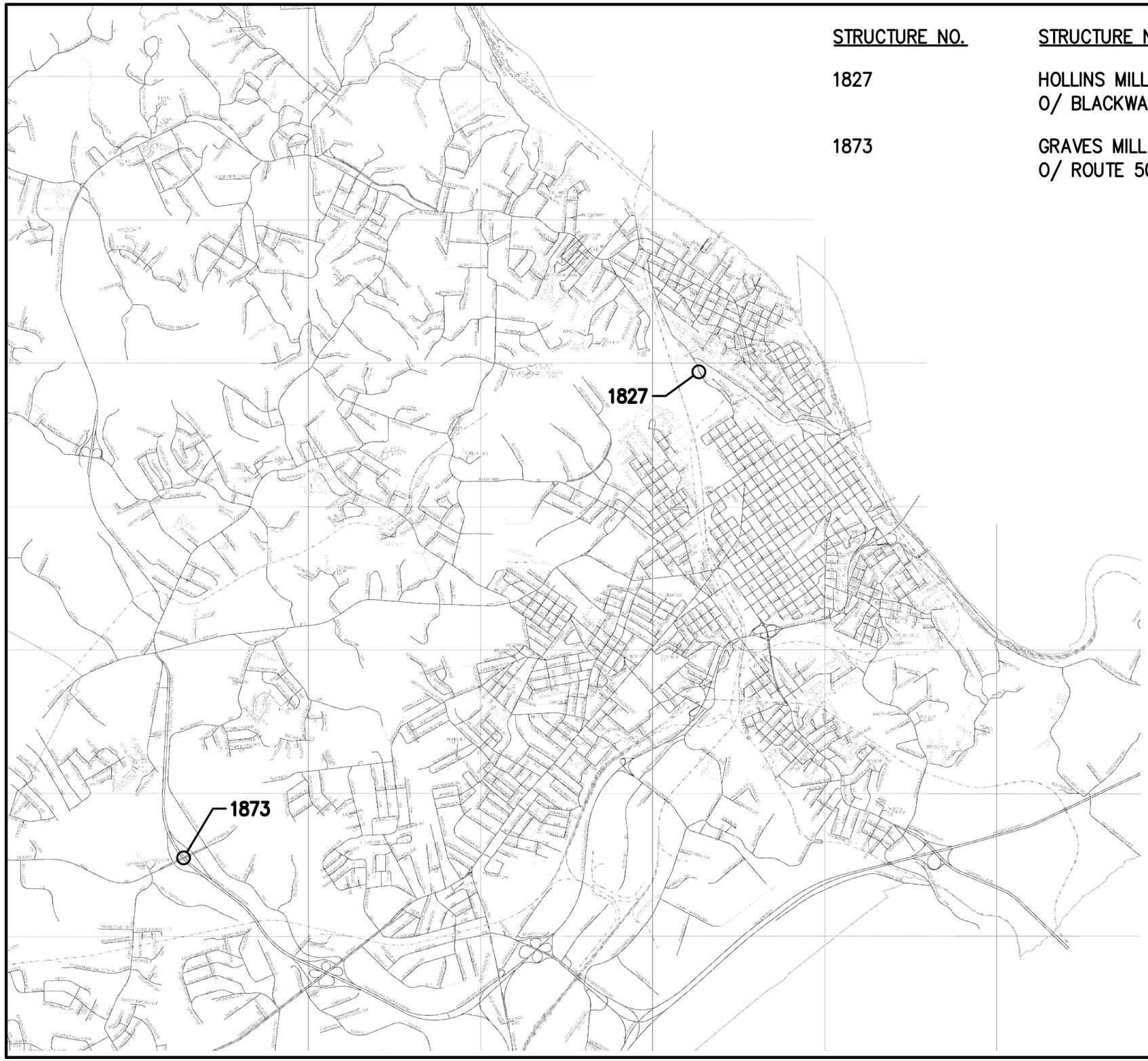

STRUCTURE NO.	STRUCTURE NAME
1827	HOLLINS MILL ROAD O/ BLACKWATER CREEK & PEDESTRIAN TRAIL
1873	GRAVES MILL ROAD O/ ROUTE 501 (LYNCHBURG EXPRESSWAY)

THE CITY OF LYNCHBURG

Issue Date: 09-OCTOBER-2015

Drawn By: DKA
Date: 10/09/15

2015 BRIDGE REHABILITATIONS

VICINITY MAP

CITY OF LYNCHBURG, VIRGINIA

Mattern & Craig
CONSULTING ENGINEERS • SURVEYORS
701 FIRST STREET, S.W.
ROANOKE, VIRGINIA 24016
(540) 345-9342
FAX (540) 345-7691

Vertical Scale: NTS

Horizontal Scale: NTS

Commission Number: 3545

Sheet No.: VM

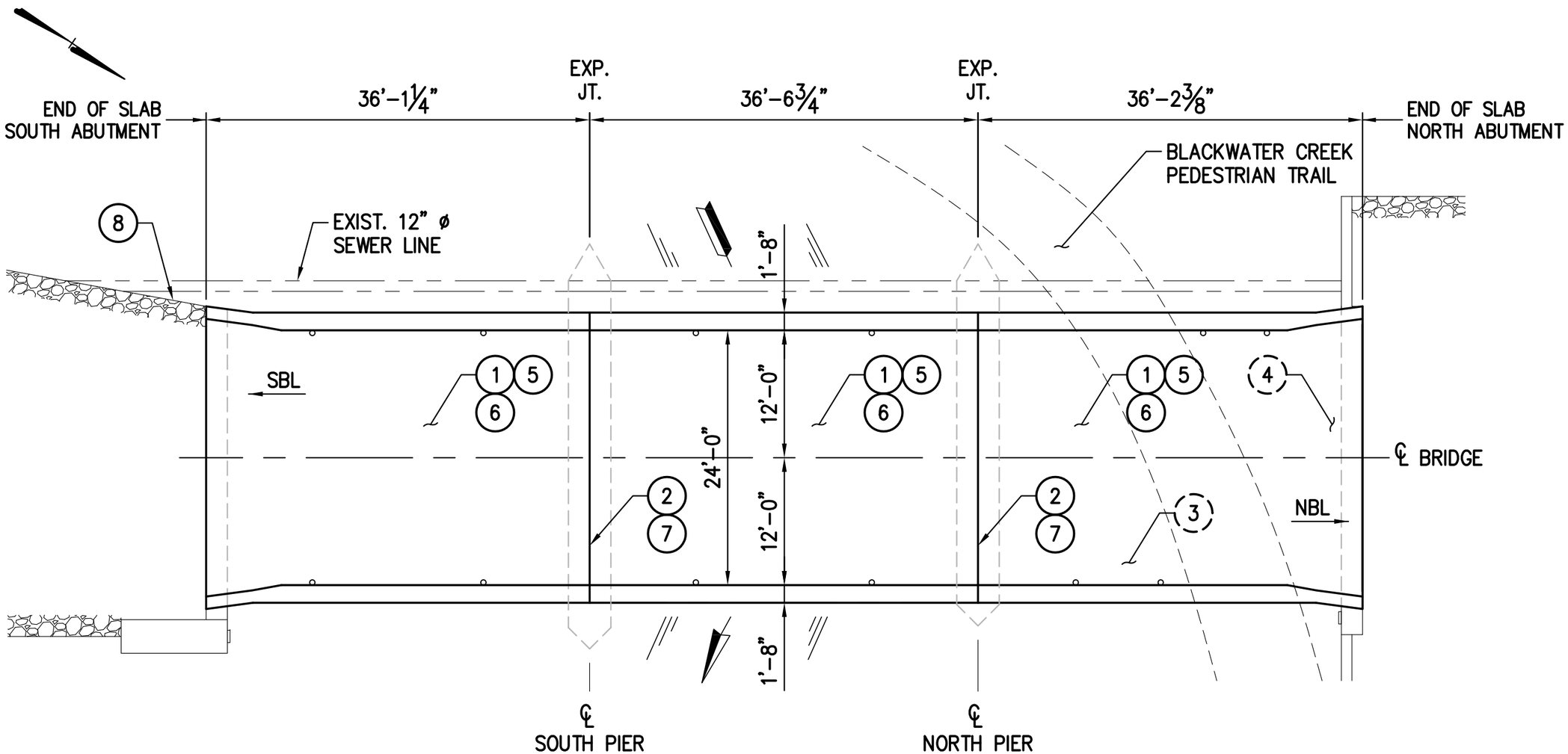

NOTES:
1 – SEAL CRACKS IN THE TOP OF DECK
2 – EPOXY MORTAR JOINT REPAIR
3 – CONCRETE SUPERSTRUCTURE SURFACE REPAIR
4 – CONCRETE SUBSTRUCTURE SURFACE REPAIR
5 – BRIDGE DECK GROOVING
6 – WATERPROOFING – PENETRANT SEALER FOR DECK
7 – PREFORMED ELASTOMERIC JOINT SEALER
8 – REPAIR STONE MASONRY FOR S.W. WINGWALL

HOLLINS MILL ROAD OVER BLACKWATER CREEK & PEDESTRIAN TRAIL

REPAIRS LAYOUT

Issue Date: 09-OCTOBER-2015

Drawn By: DKA
Date: 10/09/15

2015 BRIDGE REHABILITATIONS
BRIDGE NO. 1827
CITY OF LYNCHBURG, VIRGINIA

Mattern & Craig
CONSULTING ENGINEERS • SURVEYORS
701 FIRST STREET, S.W.
ROANOKE, VIRGINIA 24016
(540) 345-9342
FAX (540) 345-7691

Vertical Scale: NTS

Horizontal Scale: NTS

Commission Number: 3545

Sheet No.: 1827-1

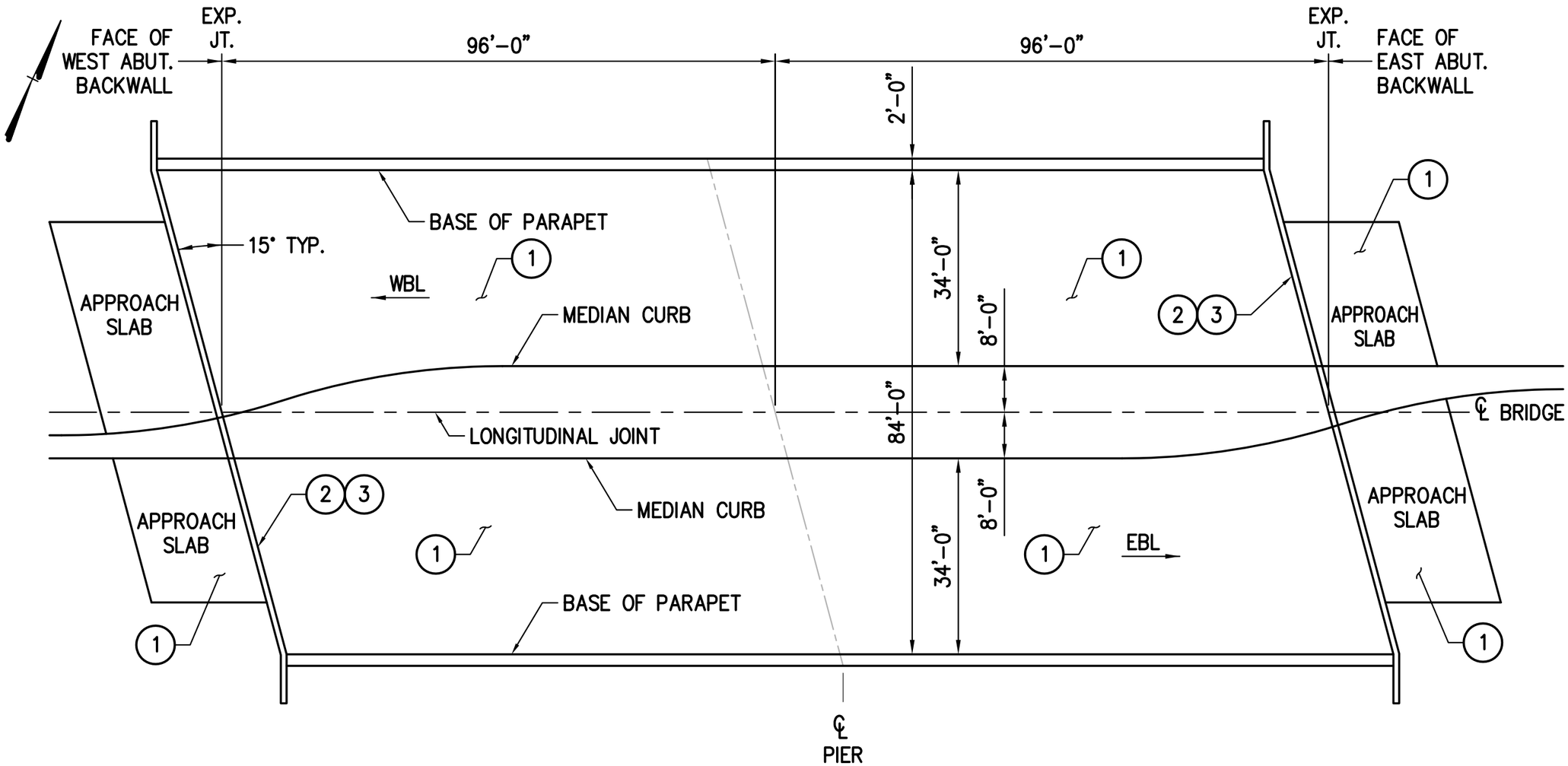

NOTES:
1 – LMCVE TYPE B PATCHING
2 – LMCVE EXPANSION JOINT RECONSTRUCTION
3 – PREFORMED ELASTOMERIC JOINT SEALER

GRAVES MILL ROAD OVER ROUTE 501 (LYNCHBURG EXPRESSWAY)

REPAIRS LAYOUT

Issue Date: 09-OCTOBER-2015

Drawn By: DKA
Date: 10/09/15

2015 BRIDGE REHABILITATIONS
BRIDGE NO. 1873
CITY OF LYNCHBURG, VIRGINIA

Mattern & Craig
CONSULTING ENGINEERS • SURVEYORS
701 FIRST STREET, S.W.
ROANOKE, VIRGINIA 24016
(540) 345-9342
FAX (540) 345-7691

Vertical Scale: NTS

Horizontal Scale: NTS

Commission Number: 3545

Sheet No.: 1873-1

** DENOTES DIMENSION MEASURED AT 70° F
PER ORIGINAL CONSTRUCTION PLANS.

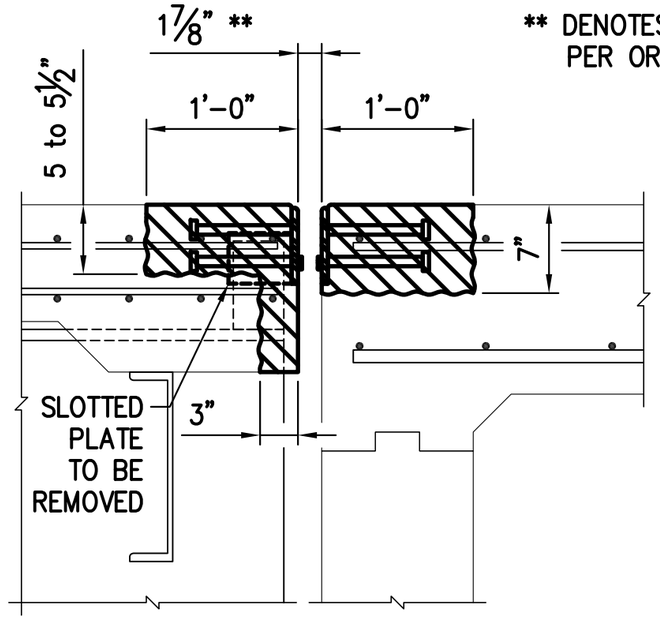

EXPANSION JOINT DEMOLITION AT DECK

DENOTES LIMITS OF DEMOLITION

DEMOLITION AND RECONSTRUCTION NOTES:

1. REMOVE CONCRETE TO THE LIMITS SHOWN, REMOVE STUDDED EXPANSION JOINT PLATES, REMOVE SLOTTED PLATE ATTACHED TO JOINT PLATE.
2. DO NOT REMOVE OR DAMAGE EXISTING REINFORCING STEEL FOR THE DECK, MEDIAN, PARAPETS, OR APPROACH SLABS.
3. INSTALL PREFORMED ELASTOMERIC JOINT SEALER PER 'SHEET BEJ' AND MANUFACTURER'S RECOMMENDATIONS.

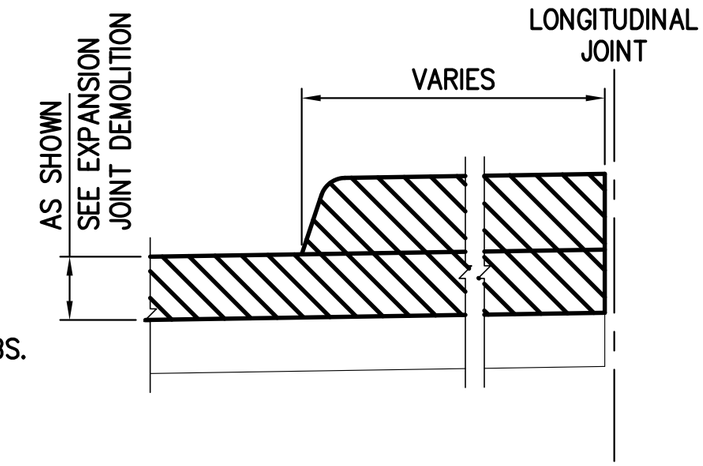

EXPANSION JOINT DEMOLITION AT MEDIAN

DENOTES LIMITS OF DEMOLITION

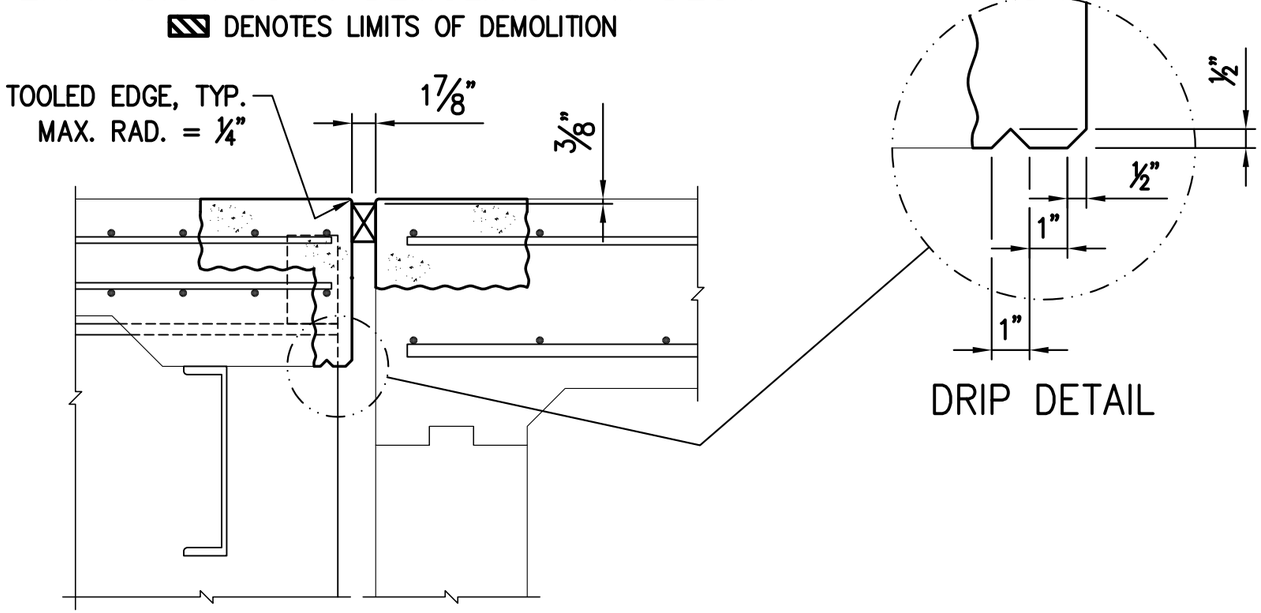

DRIP DETAIL

EXPANSION JOINT RECONSTRUCTION AT DECK

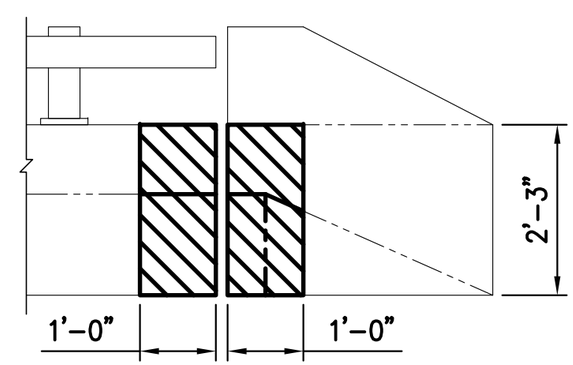

EXPANSION JOINT DEMOLITION AT PARAPET

DENOTES LIMITS OF DEMOLITION

NOTE: DEMOLITION DEPTH OF PARAPET SHALL BE COMPLETE/FULL TO THE EXTERIOR FACE.

GRAVES MILL ROAD OVER ROUTE 501 (LYNCHBURG EXPRESSWAY)

EXPANSION JOINT DEMOLITION AND RECONSTRUCTION DETAILS (1 OF 2)

Issue Date: 09-OCTOBER-2015

Drawn By: DKA
Date: 10/09/15

2015 BRIDGE REHABILITATIONS
BRIDGE NO. 1873
CITY OF LYNCHBURG, VIRGINIA

Mattern & Craig
CONSULTING ENGINEERS • SURVEYORS
701 FIRST STREET, S.W.
ROANOKE, VIRGINIA 24016
(540) 345-9342
FAX (540) 345-7691

Vertical Scale: NTS

Horizontal Scale: NTS

Commission Number: 3545

Sheet No.: 1873-2

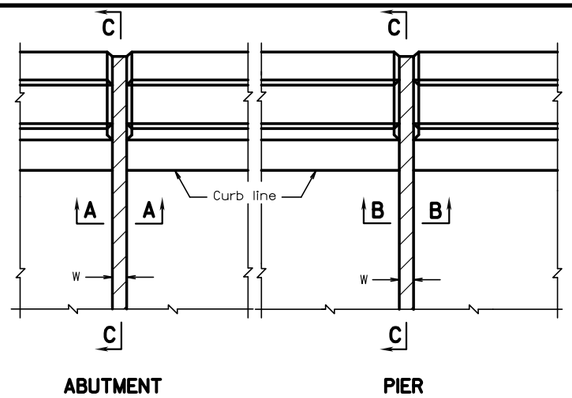

PART PLAN - STRAIGHT CROSSING

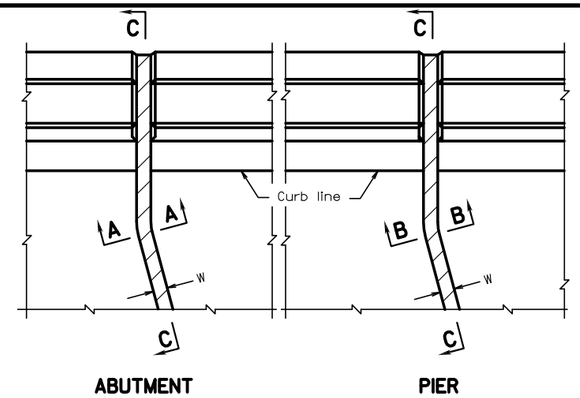

PART PLAN - SKEWED CROSSING

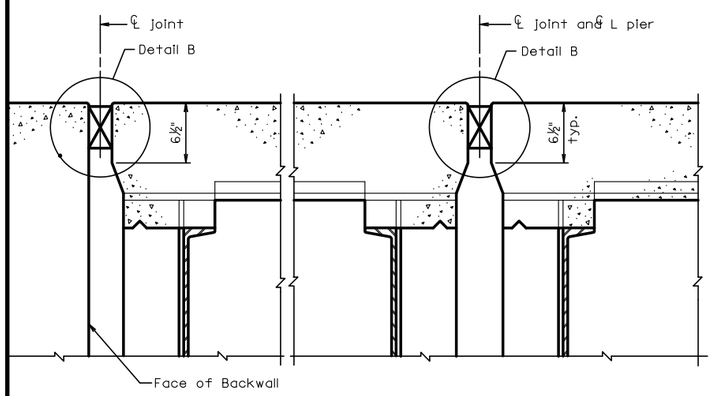

SECTION A-A

SECTION B-B

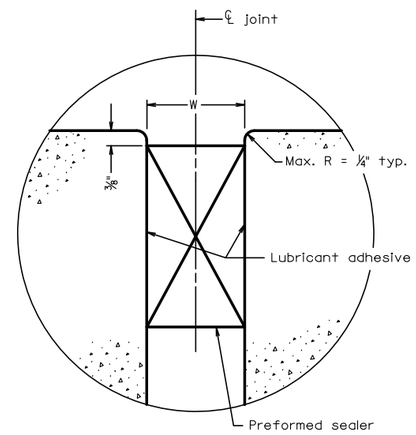

DETAIL B

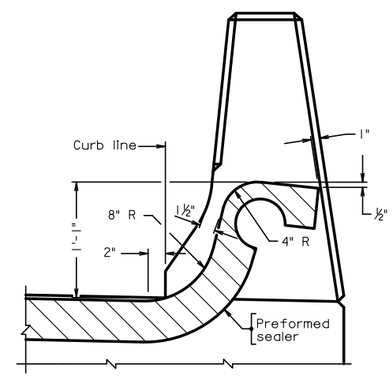

SECTION C-C

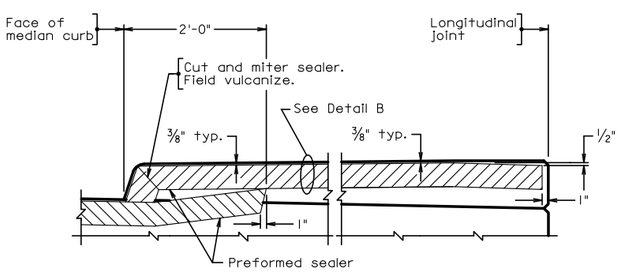

SECTION AT MEDIAN
(Structure 1873 only)

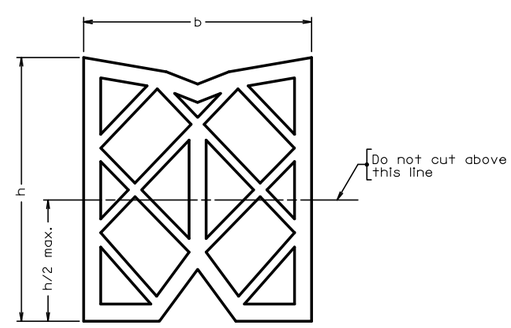

PREFORMED ELASTOMERIC JOINT SEALER
In uncompressed state

Notes:

Section of sealer shown is heavy-duty structural type sealer and may vary slightly depending on manufacturer.

As nearly as possible, sides of joints shall be straight, vertical and parallel. The area of the installation shall be free from cracks and spalls.

Sealer shall be installed in one continuous piece except for sidewalk areas.

Joint width W is the final joint width of the cured concrete when placed at 60°F. The width W shall be increased or decreased for every 10°F temperature drop or rise respectively by t. When formed, joint width W shall be reduced by the amount Δ to compensate for the opening of the joint caused by the deflection of the beam when the deck concrete is placed. If the joint is formed so that the form material will not move and the joint will not open as the deck concrete is placed, then adjustment Δ shall not be made.

Fixed Bearing: $\Delta = \frac{4d\ \Delta's}{L}$

Expansion Bearing: $\Delta = \frac{d\ \Delta's}{L}$

d = Total rotation depth from top of slab to point of rotation on bearing.

Δ's = Deflection of beam at midspan from dead load of concrete deck slab and bolsters. (See Dead Load Delection Diagram.)

L = Length of span.

Δ = Compensation for joint opening due to deflection of beam during placement of concrete deck slab and bolsters for the last span placed adjacent to the joint.

All the dimensions are in the same units.

Structure	Abutment	Pier	Sealer Size b	Sealer Depth h	Joint Width W	t
1827		North	3"	3" ±	2"	1/32"
		South	3"	3" ±	2"	1/32"
1873	East		3"	3" ±	1⅞"	1/16"
	West		3"	3" ±	1⅞"	1/16"

Contractor shall verify all joint width dimensions prior to obtaining materials.

PREFORMED ELASTOMERIC JOINT DETAILS

Issue Date: 09-OCTOBER-2015

Drawn By: DKA
Date: 10/09/15

2015 BRIDGE REHABILITATIONS
PRE. ELAS. JT. DETAILS
CITY OF LYNCHBURG, VIRGINIA

Mattern & Craig
CONSULTING ENGINEERS • SURVEYORS
701 FIRST STREET, S.W.
ROANOKE, VIRGINIA 24016
(540) 345-9342
FAX (540) 345-7691

Vertical Scale: NTS

Horizontal Scale: NTS

Commission Number: 3545

Sheet No.: BEJ