PARK AVENUE WATERLINE REPLACEMENT
FOR
CITY OF LYNCHBURG, VA.
CITY PROJECT # 14012-W

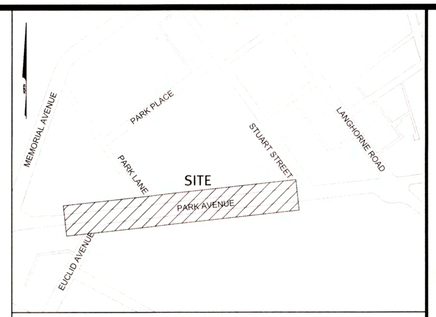

VICINITY MAP
N.T.S.

HURT & PROFFITT
2524 LANGHORNE ROAD
LYNCHBURG VA 24501
800.242.4906 TOLL FREE
434.847.7796 MAIN
434.847.0047 FAX
ENGINEERING • SURVEYING • LAND DEVELOPMENT • ENVIRONMENTAL
GEOTECHNICAL • CONSTRUCTION TESTING & INSPECTION • CULTURAL RESOURCES

LEGEND

- IPF IRON PIN FOUND
- WELL
- ELECTRIC POLE
- GUY WIRE
- TELEPHONE POLE
- TELEPHONE PEDESTAL
- CLEANOUT
- WATER METER
- WATER VALVE
- STORM MANHOLE
- SANITARY MANHOLE
- FIRE HYDRANT
- LIGHT POLE
- EDGE OF PAVEMENT
- EDGE OF GRAVEL
- EDGE OF CONCRETE
- CREEK
- GAS VALVE
- BENCHMARK
- SIGN
- GUARDRAIL
- FENCE
- OH E — OVERHEAD ELECTRIC
- OH T — OVERHEAD TELEPHONE
- OH CTV — OVERHEAD CABLE TV
- UG CTV — UG CABLE TELEVISION
- UG E — UG ELECTRIC LINE
- UG FO — UG FIBER OPTIC LINE
- UG G — UG GAS LINE
- SS — UG SAN. SEWER LINE
- UG T — UG TELEPHONE LINE
- W — UG WATER LINE
- CONCRETE
- BRICK
- CURB DROP INLET
- UG STORM SEWER

PROPOSED

- *WATER METER*
- *WATER LINE*
- *CONCRETE ANCHOR BLOCK*
- *AIR RELEASE VALVE*
- *FIRE HYDRANT*
- *GATE VALVE*

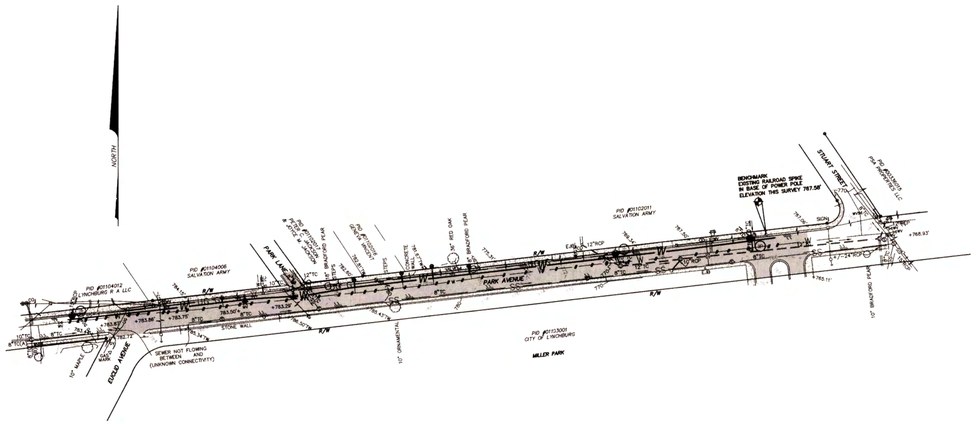

VIRGINIA UNIFORM CODING SYSTEM FOR EROSION AND SEDIMENT CONTROL PRACTICES
* CHART TAKEN FROM THE VIRGINIA EROSION AND SEDIMENT CONTROL HANDBOOK (JULY 1992)

- SF *SILT FENCE*
- TS *TEMPORARY SEEDING*
- PS *PERMANENT SEEDING*
- MU *MULCHING*

ABBREVIATIONS

TC	TERRA-COTTA
DI	DUCTILE IRON
CP	CONCRETE PIPE

100 50 0 100 200
GRAPHIC SCALE IN FEET

GENERAL NOTES:

1. *NO DEMOLITION, SITE WORK, OR GRADING IS PERMITTED PRIOR TO ISSUANCE OF A LAND DISTURBANCE PERMIT BY THE CITY.*
2. *ALL CONSTRUCTION STAGING, LOADING, TEMPORARY PARKING, AND LAYDOWN AREAS SHALL BE COORDINATED WITH THE OWNER PRIOR TO ANY CONSTRUCTION OR DEMOLITION ACTIVITIES.*
3. *CONTRACTOR IS RESPONSIBLE FOR PROVIDING ADEQUATE DUST CONTROL TO PREVENT DAMAGING AND/OR NUISANCE AIRBORNE DUST FROM LEAVING THE SITE. THE CONTRACTOR SHALL BE RESPONSIBLE FOR TAKING WHATEVER MEASURES ARE NECESSARY TO CORRECT AND/OR COMPENSATE BORDERING PROPERTY OWNERS AND THE OWNER FOR ALL DAMAGES DUE TO DUST.*
4. *THIS PROJECT IS TO BE CONSTRUCTED IN ACCORDANCE WITH THE LATEST EDITION OF THE CITY OF LYNCHBURG'S MANUAL OF SPECIFICATIONS AND STANDARD DETAILS.*
5. *CONTRACTOR SHALL BE RESPONSIBLE FOR OBTAINING ALL PERMITS AND BONDS AS DEEMED NECESSARY BY THE LOCAL AUTHORITY.*
6. *THE CITY OF LYNCHBURG WILL REQUIRE A PRE-CONSTRUCTION MEETING WITH THE CERTIFIED RESPONSIBLE LAND DISTURBER, THE ENGINEER, OWNER CONTACT AND THE CITY OF LYNCHBURG E&S COORDINATOR PRIOR TO THE ISSUANCE OF THE LAND DISTURBING PERMIT. CONTRACTOR SHALL BE PREPARED TO PROVIDE HIS CERTIFICATION NUMBER AT THIS MEETING.*
7. *THE TOPOGRAPHIC SURVEY HAS BEEN PREPARED FROM CITY GIS AND FIELD SURVEY. THIS SURVEY WAS PREPARED AT THE REQUEST OF CITY OF LYNCHBURG. BY J. ADAM BRYANT DATED JUNE 10-11, 2014. NO BOUNDARY SURVEY WAS PERFORMED.*
8. *CONTRACTOR SHALL SUBMIT A "MAINTENANCE OF TRAFFIC" PLAN TO THE CITY FOR APPROVAL 2 WEEKS PRIOR TO STARTING WORK.*
9. *COORDINATION OF ALL CONSTRUCTION AND WORK ZONE ACTIVITIES WITH THE CITY'S MIDTOWN CONNECTOR PROJECT IS A SALIENT FEATURE OF THIS CONTRACT.*

PROJECT NARRATIVE
THE SCOPE OF WORK FOR THIS PROJECT SHALL INCLUDE THE INSTALLATION OF ALL MATERIALS AND EQUIPMENT FOR THE CONSTRUCTION OF NEW WATER LINE AS SHOWN HEREIN.
TOTAL DISTURBED AREA: 0.75 ACRES; A VIRGINIA STORMWATER MANAGEMENT PERMIT WILL NOT BE REQUIRED.

I / WE HEREBY CERTIFY THAT ALL SITE CONSTRUCTION, DRAINAGE AND GRADING WILL BE DONE PURSUANT TO THIS PLAN AND THAT THE APPLICABLE STORMWATER MANAGEMENT CONDITIONS AND REQUIREMENTS OF THE CITY OF LYNCHBURG, THE COMMONWEALTH OF VIRGINIA AND THE FEDERAL GOVERNMENT AND ITS AGENCIES ARE HEREBY MADE PART OF THIS PLAN.

SIGNATURE: _____
PRINTED NAME: _____
TITLE: _____
DATE: _____

INDEX OF SHEETS

C0.0 COVER SHEET
C0.1 EROSION & SEDIMENT CONTROL NOTES & DETAILS
C1.0 WATERLINE PLAN AND PROFILE
C2.0 DETAILS
C2.1 DETAILS

I HEREBY CERTIFY THAT, TO THE BEST OF MY ABILITY, THIS PLAN HAS BEEN PREPARED IN ACCORDANCE WITH THE LATEST CITY OF LYNCHBURG MANUAL OF SPECIFICATIONS AND STANDARD DETAILS AND CITY CODE.

SIGNATURE: _____
PRINTED NAME AND TITLE: _____
DATE: _____
REGISTRATION NUMBER: _____

ENGINEER CONTACT

BRIAN L. COSSMAN, PE
HURT AND PROFFITT, INC
2524 LANGHORNE ROAD
LYNCHBURG, VIRGINIA 24501
(434) 847-7796 EXT 679
BLC@HANDP.COM

OWNER

CITY OF LYNCHBURG
900 CHURCH ST.
LYNCHBURG, VA 24504

OWNER CONTACT

SCOTT PARKINS
CITY OF LYNCHBURG
DEPARTMENT OF WATER RESOURCES
525 TAYLOR STREET
LYNCHBURG, VA 24501
(434) 455-4248
SCOTT.PARKINS@LYNCHBURGVA.GOV

UTILITY CONTACTS

WATER & SEWER:	*CITY OF LYNCHBURG* *DEPARTMENT OF WATER RESOURCES* *ATTN: HARRY DOSS* *525 TAYLOR STREET* *LYNCHBURG, VA 24501* *(434) 455-4271*
TELEPHONE:	*VERIZON VIRGINIA INC.* *LESLIE SCHMITT* *ENGINEERING DEPARTMENT* *553 LEESVILLE ROAD* *LYNCHBURG, VA 24502* *(434) 237-9522* *REPAIR: 1-888-663-0363*
ELECTRICITY:	*AMERICAN ELECTRIC POWER* *ATTN: TOM McCONAGHY* *4001 MAYFLOWER DRIVE* *LYNCHBURG, VA 24501* *(434) 522-4288*
GAS:	*COLUMBIA GAS OF VIRGINIA INC.* *CUSTOMER SERVICE* *RICHMOND, VA 23236* *1-800-543-8911*
CABLE:	*COMCAST DIGITAL CABLE* *2820 LINKHORNE DRIVE* *LYNCHBURG, VA 24501* *(888) 266-2278*

THE ENGINEER AND/OR SURVEYOR TAKES NO RESPONSIBILITY FOR THE LOCATION OR ACCURACY OF THE UTILITIES AS SHOWN HEREON OR ANY UTILITIES WITHIN THE PROJECT THAT MAY NOT BE SHOWN HEREON. THE CONTRACTOR SHALL BE RESPONSIBLE FOR CONTACTING THE UTILITY COMPANIES TO SEE IF ANY UTILITIES EXIST WITHIN THE AREA OF THE PROJECT BEFORE ANY CONSTRUCTION BEGINS. ANY COST INCURRED BY DAMAGING ANY UTILITY WITHIN THE PROJECT SHALL BE AT THE EXPENSE OF THE CONTRACTOR.

48 WORKING HOURS PRIOR TO STARTING THE WORK, THE CONTRACTOR SHALL CALL MISS UTILITY AT 811 AND ADVISE THE NATURE AND LOCATION OF THE WORK.

APPROVED:

ESC/SWM ADMINISTRATOR	30 Sept 2014 DATE
UTILITIES ENGINEER	9/19/2014 DATE
CITY ENGINEER	9/16/14 DATE

VIRGINIA CERTIFIED RESPONSIBLE LAND DISTURBER

NAME - PRINTED *SIGNATURE* *DATE*
PHONE # *COMPANY*
ADDRESS

COVER SHEET
FOR
PARK AVENUE WATERLINE REPLACEMENT PROJECT
CITY OF LYNCHBURG, VIRGINIA

PROJECT NO.	20140638
LATITUDE:	37°24'16" N
LONGITUDE:	79°09'50" W
DATE:	7/16/14
DRAWN BY:	WCH
CHECKED BY:	BLC

COMMONWEALTH OF VIRGINIA
BRIAN L. COSSMAN
Lic. No. 039637
8/25/14
PROFESSIONAL ENGINEER

PLAN REVISIONS

#	DATE	DESCRIPTION OF REVISION	SHEETS
2	8/25/14	CITY COMMENTS	ALL
1	7/18/14	CITY COMMENTS	ALL

SHEET NO.
C0.0

Sep 11, 2014 - 1:36pm \\Data01\Projects\20140638\CAD\Cover.dwg

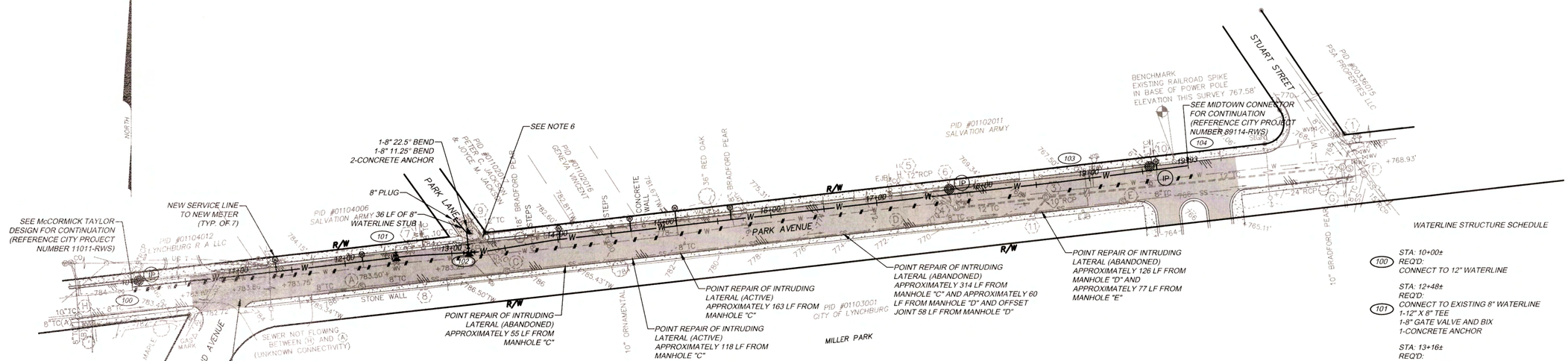

WATERLINE NOTES:

1. LOCATION AND DEPTHS OF OF EXISTING WATER, GAS AND OTHER UTILITY MAINS AS SHOWN ARE APPROXIMATE ONLY. CONTRACTOR TO VERIFY LOCATION AND DEPTHS PRIOR TO CONSTRUCTION AND CONTACT THE CITY ABOUT ANY CONFLICTS.
2. MAINTAIN 18" MINIMUM VERTICAL SEPARATION AT UTILITY CROSSINGS.
3. MAINTAIN 48" MINIMUM COVER ON PROPOSED WATER MAINS.
4. FOR ABANDONMENT OF THE PIPE, AFTER THE PIPE IS PHYSICALLY CUT AND SEPARATED, PUT ONE FOOT OF CONCRETE IN THE ABANDONED PIPE TO CAP IT. PROVIDE CAP ON PIPE REMAINING IN SERVICE AND PROVIDE THRUST BLOCK RESTRAINT.
5. ALL EXCAVATION FOR WATERLINES SHALL BE UNCLASSIFIED. UNCLASSIFIED SHALL INCLUDE ALL NATURAL OBSTRUCTIONS.
6. MAINTAIN MINIMUM OF 10' HORIZONTAL SEPARATION FROM SANITARY SEWER MANHOLE.
7. ALL PUBLIC INFRASTRUCTURE SHALL BE CONSTRUCTED IN ACCORDANCE WITH CITY OF LYNCHBURG MANUAL OF SPECIFICATIONS AND STANDARD DETAILS.
8. CONTRACTOR TO COORDINATE WITH CITY AND PROPERTY OWNER FOR CONNECTION OF PRIVATE SERVICE TO NEW METER.
9. AT WATERLINE STRUCTURE 101, CONTRACTOR TO INSTALL FITTINGS. AS NECESSARY, TO CONNECT TO EXISTING WATERLINE. DEPTH OF EXISTING LINE IS ASSUMED TO BE 3' TO TOP OF PIPE.
10. CONTRACTOR RESPONSIBLE FOR FULL REPAVE OF PARK AVENUE. FULL WIDTH REPAVEMENT REQUIRED BETWEEN EUCLID AVENUE AND END OF WORK NEAR STUART STREET.

WATERLINE STRUCTURE SCHEDULE

(100) STA: 10+00±
REQ'D:
CONNECT TO 12" WATERLINE

(101) STA: 12+48±
REQ'D:
CONNECT TO EXISTING 8" WATERLINE
1-12" X 8" TEE
1-8" GATE VALVE AND BIX
1-CONCRETE ANCHOR

(102) STA: 13+16±
REQ'D:
1-12" X 8" TEE
1-8" GATE VALVE AND BOX
2-12" GATE VALVE AND BOX
1-CONCRETE ANCHOR

(103) STA: 19+01±
REQ'D:
CONNECT TO EXISTING FIRE HYDRANT ASSEMBLY
1-12" X 6" TEE

(104) STA: 19+93±
REQ'D:
CONNECT TO 12" WATERLINE

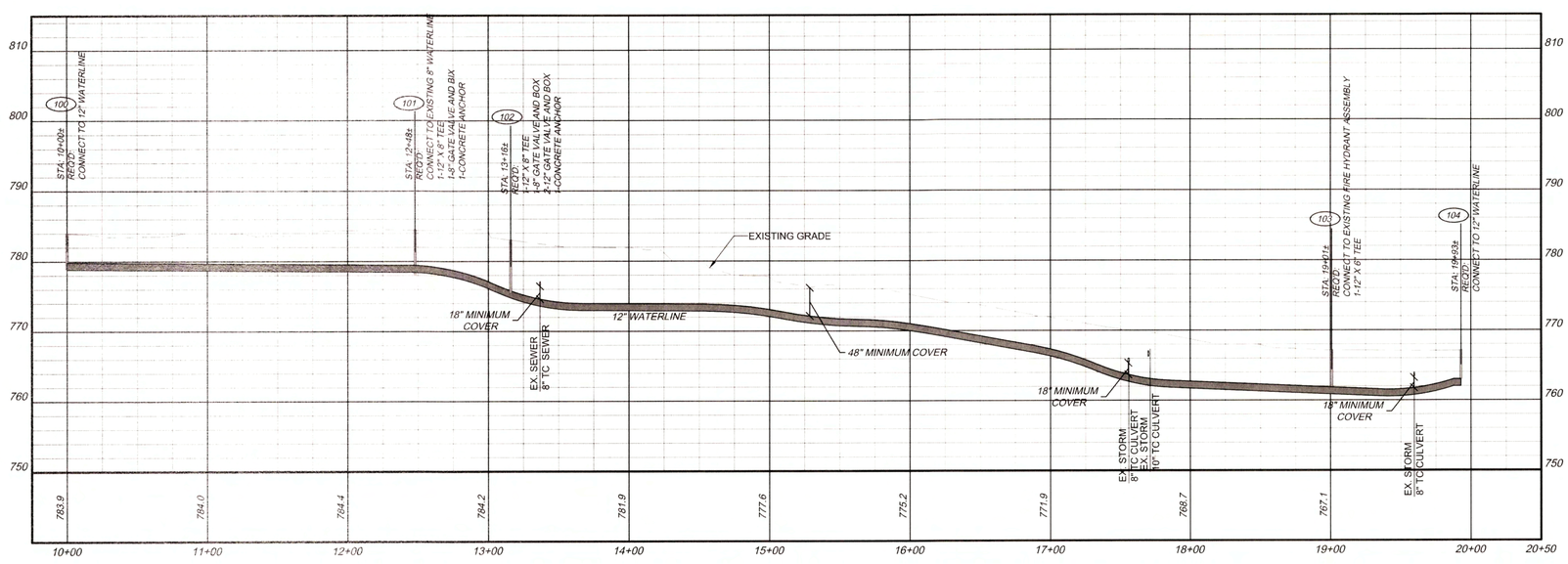

SANITARY SCHEDULE

(A) MANHOLE
TOP 783.14'
INV IN 778.2'
INV OUT 776.9'

(B) MANHOLE
TOP 782.52'
INV IN(12"TC) 779.5'
INV IN(8"TC) 776.7'
INV IN(10"TC) 778.5'
INV OUT 776.8'

(C) MANHOLE
TOP 781.98'
INV IN FROM 'B' 775.8'
INV IN FROM 'A' 775.6'
INV OUT 775.5'

(D) MANHOLE
TOP 770.62'
INV IN 761.8'
INV OUT 761.7'

(E) MANHOLE
TOP 776.15'
INV IN 759.9'
INV OUT 759.8'

(F) MANHOLE
TOP 768.13'
INV IN(8"TC) 757.3'
INV IN(8"TC) 757.3'
INV IN(15"RCP) 764.0'
INV OUT 757.2'

(G) MANHOLE
VERTICAL PIPE
(POSSIBLE CLEANOUT)

(H) MANHOLE
TOP 783.83'
INV IN(10"TC) 778.5'
INV IN(A) 775.7'
INV IN(B) 775.5'
INV IN(4"PVC) 779.2'
INV OUT 775.6'

STORM SCHEDULE

(1) CURB INLET
TOP 767.85'
INV OUT 766.9'

(2) MANHOLE
TOP 768.14'
INV IN(12"RCP) 761.1'
INV IN(12"TC) 761.1'
INV OUT 759.1'

(3) MANHOLE
TOP 767.62'
INV IN(12"TC) 761.3'
INV IN(10"RCP) 763.0'
INV OUT 761.2'

(4) MANHOLE
TOP 769.70'
INV IN(10"TC) 764.9'
INV IN(8"TC) 765.0'
INV OUT 764.7'

(5) GRATED INLET
TOP 771.10'
INV IN 766.2'
INV OUT 766.0'

(6) CURB INLET
TOP 769.99'
INV OUT 766.9'

(7) CURB INLET
TOP 783.10'
INV IN 779.9'
INV OUT NOT VISIBLE
(FULL OF WATER)

(8) CURB INLET
TOP 783.01'
(FULL OF DEBRIS)

(9) GRATED INLET
TOP 782.25'
INV OUT 779.3'

(10) CURB INLET
TOP 766.56'
INV IN(6"TC) 764.3'
INV IN(6"TC)764.3'
INV OUT 764.0'

(11) CURB INLET
TOP 767.50'
(FULL OF DEBRIS)

(12) CURB INLET
TOP 783.61'
INV OUT 780.6'

2	8/25/14	CITY COMMENTS
1	7/18/14	CITY COMMENTS

HURT & PROFFITT
2524 LANGHORNE ROAD
LYNCHBURG, VA 24501
800.242.4906 TOLL FREE
434.847.7796 MAIN
434.847.0047 FAX
ENGINEERING • SURVEYING • LAND DEVELOPMENT • ENVIRONMENTAL
GEOTECHNICAL • CONSTRUCTION TESTING & INSPECTION • CULTURAL RESOURCES

WATERLINE PLAN AND PROFILE
FOR
PARK AVENUE WATERLINE REPLACEMENT PROJECT
CITY OF LYNCHBURG, VIRGINIA

PROJECT NO.	20140638
LATITUDE:	37°24'16" N
LONGITUDE:	79°09'50" W
DATE:	7/16/14
DRAWN BY:	WCH
CHECKED BY:	BLC

COMMONWEALTH OF VIRGINIA
BRIAN L. COSSMAN
Lic. No. 039637
8/25/14
PROFESSIONAL ENGINEER

SHEET NO.
C1.0

Aug 25, 2014 - 11:40am \\DATA01\Projects\2014\20140638\CAD\Water Design.dwg

EROSION AND SEDIMENT CONTROL NARRATIVE

I. PROJECT DESCRIPTION

THE PROJECT CONSISTS OF WATERLINE REPLACEMENT ON PARK AVENUE IN THE CITY OF LYNCHBURG. INCLUDED IN THE PROJECT ARE INSTALLATION OF APPROXIMATELY 993 LF OF WATER LINE, AND APPURTENANCES. THE TOTAL AREA TO BE DISTURBED BY THE PROJECT IS APPROXIMATELY 0.75 ACRES. THERE IS NO CHANGE TO PERCENT IMPERVIOUS AREA WITH THIS PROJECT.

II. EXISTING SITE CONDITIONS

THE PROJECT AREA IS ZONED R-2. CURRENTLY THE SITE INVOLVES MULTIPLE RESIDENTIAL STREETS WITH MULTIPLE LOTS AND DRIVEWAYS CONNECTING TO THE EXISTING ROADWAY. EXISTING VEGETATION RANGES FROM GRASS LOTS, SMALL SHRUBS, AND TREES 4" TO 14" IN DIAMETER. THERE ARE CURRENTLY NO WATER QUALITY MEASURES IN PLACE.

III. ADJACENT PROPERTY

THE EXISTING PARCELS SURROUNDING THE PROPOSED IMPROVEMENTS ARE PROPERTIES ZONED B-3 AND B-5.

IV. OFFSITE AREAS

NO WORK WILL OCCUR OFFSITE.

V. SOILS

THE SOIL SURVEY MAP FOR LYNCHBURG SHOWS THE SITE TO BE MAINLY COMPRISED OF CULLEN LOAM (CuC2). SLOPES ARE 6% TO 15% ERODED. RUNOFF IS MEDIUM TO RAPID AS THIS SOIL IS SUSCEPTIBLE TO EROSION WHEN IT HAS BEEN DISTURBED OR TILLED.

VI. CRITICAL AREAS

THE DEVELOPMENT WILL NEED EROSION AND SEDIMENT CONTROL MEASURES DURING CONSTRUCTION ACTIVITIES. CONTRACTOR SHALL KEEP EXISTING ROADS FREE OF CONSTRUCTION DEBRIS.

VII. EROSION AND SEDIMENT CONTROL

ALL VEGETATIVE AND STRUCTURAL EROSION AND SEDIMENT CONTROL PRACTICES SHALL BE CONSTRUCTED AND MAINTAINED BY THE CONTRACTOR IN ACCORDANCE WITH THE LATEST EDITION OF THE VIRGINIA EROSION AND SEDIMENT CONTROL HANDBOOK. SYMBOLS, DETAILS, AND DIMENSIONS USED ARE TAKEN FROM THE HANDBOOK, AS WELL AS THE VIRGINIA DEPARTMENT OF TRANSPORTATION ROAD AND BRIDGE STANDARDS, 2001 EDITION, VOLUME 1 OF 2.

A. STRUCTURAL PRACTICES

3.05 SILT FENCE (SF) - A TEMPORARY SEDIMENT BARRIER CONSTRUCTED OF POSTS PLACED ACROSS OR AT THE TOE OF A SLOPE OR IN A MINOR DRAINAGE WAY TO INTERCEPT AND DETAIN SEDIMENT AND DECREASE FLOW VELOCITIES FROM DRAINAGE AREAS OF LIMITED SIZE. SILT FENCE SHALL BE INSTALLED ALONG THE EDGE OF PAVEMENT AT THE LIMITS OF GRADING AS SHOWN ON THE PLANS.

3.07 INLET PROTECTION (IP) - A SEDIMENT FILTER AROUND A DROP INLET OR CURB INLET TO PREVENT SEDIMENT FROM ENTERING STORM DRAINAGE SYSTEMS PRIOR TO PERMANENT STABILIZATION OF THE DISTURBED AREA.

B. VEGETATIVE PRACTICES

SEEDING MEASURES SHALL BE USED ON DISTURBED SOIL AT CUT/FILL SLOPES, SIDES OF SEDIMENT BASINS, DITCH LINES, OR AREAS OUTSIDE OF ON-GOING CONSTRUCTION PRACTICES WITHIN SEVEN (7) DAYS OF COMPLETED GRADING. ALL AREAS DISTURBED BY CONSTRUCTION WILL BE STABILIZED WITH PERMANENT SEEDING IMMEDIATELY FOLLOWING FINAL GRADING.

UNLESS OTHERWISE INDICATED, ALL EROSION AND SEDIMENT CONTROL PRACTICES SHALL BE CONSTRUCTED AND MAINTAINED ACCORDING TO MINIMUM STANDARDS AND SPECIFICATIONS OF THE LATEST EDITION OF THE VIRGINIA EROSION AND SEDIMENT CONTROL HANDBOOK.

3.31 TEMPORARY SEEDING (TS) - THE CONTRACTOR IS TO IMPLEMENT TEMPORARY SEEDING IF DISTURBED LAND IS LEFT EXPOSED FOR OVER 30 DAYS AND CONSTRUCTION IS NOT COMPLETE IN THIS AREA.

3.32 PERMANENT SEEDING (PS) - ESTABLISHMENT OF PERENNIAL VEGETATIVE COVER BY PLANTING SEED ON ROUGH-GRADED AREAS THAT WILL NOT BE BROUGHT TO FINAL GRADE FOR A YEAR OR MORE OR WHERE PERMANENT, LONG-LIVED VEGETATIVE COVER IS NEEDED ON FINE-GRADED AREAS.

3.35 MULCHING (MU) - APPLICATION OF PLANT RESIDUES OR OTHER SUITABLE MATERIALS TO DISTURBED SURFACES TO PREVENT EROSION AND REDUCE OVERLAND FLOW VELOCITIES. FOSTERS PLANT GROWTH BY INCREASING AVAILABLE MOISTURE AND PROVIDING INSULATION AGAINST EXTREME HEAT OR COLD. EC-2 SHALL BE USED AS MULCHING MATERIAL FOR THIS PROJECT.

C. MINIMUM STANDARDS (MS):

ALL APPLICABLE VIRGINIA EROSION AND SEDIMENT CONTROL REGULATIONS AND MINIMUM STANDARDS SHALL BE ADHERED TO DURING ALL PHASES OF CONSTRUCTION. THESE INCLUDE, BUT ARE NOT LIMITED TO THE FOLLOWING:

MS-1 STABILIZATION OF DENUDED AREAS:
PERMANENT OR TEMPORARY SOIL STABILIZATION SHALL BE APPLIED TO BARE AREAS WITHIN 7 DAYS AFTER FINAL GRADE IS REACHED ON ANY PORTION OF THE SITE UNLESS OTHERWISE SHOWN. TEMPORARY SOIL STABILIZATION SHALL BE APPLIED WITHIN 7 DAYS TO DENUDED AREAS THAT MAY NOT BE AT FINAL GRADE, BUT WILL REMAIN DORMANT OR UNDISTURBED FOR LONGER THEN 30 DAYS. PERMANENT STABILIZATION SHALL BE APPLIED TO AREAS THAT ARE TO BE LEFT DORMANT FOR MORE THAN ONE YEAR.

MS-2 STABILIZATION OF SOIL STOCKPILES:
DURING CONSTRUCTION OF THE PROJECT, SOIL STOCKPILES SHALL BE STABILIZED OR PROTECTED WITH SEDIMENT TRAPPING MEASURES. THE APPLICANT IS RESPONSIBLE FOR TEMPORARY PROTECTION AND PERMANENT STABILIZATION OF ALL STOCKPILES ON SITE AS WELL AS SOIL INTENTIONALLY TRANSPORTED FROM THE PROJECT SITE.

MS-3 PERMANENT VEGETATIVE COVER:
A PERMANENT VEGETATIVE COVER SHALL BE ESTABLISHED ON DENUDED AREAS NOT OTHERWISE PERMANENTLY STABILIZED. PERMANENT VEGETATION SHALL NOT BE CONSIDERED ESTABLISHED UNTIL A GROUND COVER IS ACHIEVED THAT, IN THE OPINION OF THE CITY INSPECTOR, IS UNIFORM AND MATURE ENOUGH TO SURVIVE AND INHIBIT EROSION.

MS-4 TIMING AND STABILIZATION OF SILT TRAPPING MEASURES:
SEDIMENT TRAPS, STORM DRAIN INLET PROTECTION, SILT FENCING, AND OTHER MEASURES INTENDED TO TRAP SEDIMENT SHALL BE CONSTRUCTED AS A FIRST STEP IN ANY LAND DISTURBING ACTIVITY. THE STRUCTURES SHALL BE MADE FUNCTIONAL BEFORE UPSLOPE LAND DISTURBANCE TAKES PLACE.

MS-5 STABILIZATION OF EARTHEN STRUCTURES:
STABILIZATION MEASURES SHALL BE APPLIED TO EARTHEN STRUCTURES SUCH AS DAMS, DIKES, AND DIVERSIONS IMMEDIATELY AFTER INSTALLATION.

MS-6 SEDIMENT BASINS:
A SEDIMENT BASIN SHALL CONTROL SURFACE RUNOFF FROM DISTURBED AREAS THAT IS COMPRISED OF FLOW FROM DRAINAGE AREAS GREATER THAN OR EQUAL TO THREE ACRES. THE SEDIMENT BASIN SHALL BE DESIGNED AND CONSTRUCTED TO ACCOMMODATE THE ANTICIPATED SEDIMENT LOADING FOR THE LAND DISTURBING ACTIVITY. THE OUTFALL DEVISE OR SYSTEM DEVICE SHALL TAKE INTO ACCOUNT THE TOTAL DRAINAGE AREA FLOWING THROUGH THE DISTURBED AREA TO BE SERVED BY THE BASIN.

MS-7 CUT AND FILL SLOPES:
CUT AND FILL SLOPES SHALL BE CONSTRUCTED IN A MANNER THAT WILL MINIMIZE EROSION. SLOPES THAT ARE FOUND TO BE ERODING EXCESSIVELY WITHIN ONE YEAR OF PERMANENT STABILIZATION SHALL BE PROVIDED WITH ADDITIONAL SLOPE STABILIZING MEASURES UNTIL THE PROBLEM IS CORRECTED.

MS-8 CONCENTRATED RUNOFF DOWN CUT OR FILL SLOPES:
CONCENTRATED RUNOFF SHALL NOT FLOW DOWN CUT OR FILL SLOPES UNLESS CONTAINED WITHIN AN ADEQUATE TEMPORARY OR PERMANENT CHANNEL, FLUME, OR SLOPE DRAIN STRUCTURE.

MS-9 WATER SEEPS FROM A SLOPE FACE:
WHENEVER WATER SEEPS FROM A SLOPE FACE, ADEQUATE DRAINAGE OR OTHER PROTECTION SHALL BE PROVIDED.

MS-10 STORM SEWER INLET PROTECTION:
ALL STORM SEWER INLETS SHALL BE PROTECTED SO THAT SEDIMENT-LADEN WATER CANNOT ENTER THE CONVEYANCE SYSTEM WITHOUT FIRST BEING FILTERED OR OTHERWISE TREATED TO REMOVE SEDIMENT.

MS-11 STABILIZATION OF OUTLETS:
BEFORE NEWLY CONSTRUCTED STORM WATER CONVEYANCE CHANNELS ARE MADE OPERATIONAL, ADEQUATE OUTLET PROTECTION AND ANY REQUIRED TEMPORARY OR PERMANENT CHANNEL LINING SHALL BE INSTALLED IN BOTH THE CONVEYANCE CHANNEL AND RECEIVING CHANNEL.

MS-12 WORK IN LIVE WATERCOURSES:
PRECAUTIONS SHALL BE TAKEN TO MINIMIZE ENCROACHMENT AND SEDIMENT TRANSPORT WHEN WORKING IN LIVE WATERCOURSES. THE WORK AREA SHALL BE STABILIZED TO THE GREATEST EXTENT POSSIBLE DURING CONSTRUCTION OF CAUSEWAYS AND COFFERDAMS. EARTHEN FILL MAY BE USED FOR THESE STRUCTURES IF ARMORED BY NON-ERODIBLE COVER MATERIALS.

MS-13 CROSSING A LIVE WATERCOURSE:
WHEN A LIVE WATERCOURSE MUST BE CROSSED BY CONSTRUCTION VEHICLES MORE THAN TWICE IN ANY SIX MONTH PERIOD, A TEMPORARY STREAM CROSSING CONSTRUCTED OF NON-ERODIBLE MATERIALS SHALL BE PROVIDED.

MS-14 APPLICABLE REGULATIONS:
ALL APPLICABLE FEDERAL, STATE, AND LOCAL REGULATIONS PERTAINING TO WORKING IN OR CROSSING LIVE WATERCOURSES SHALL BE MET.

MS-15 STABILIZATION OF BED AND BANKS:
THE BED AND BANKS OF A WATERCOURSE SHALL BE STABILIZED IMMEDIATELY AFTER WORK IN THE WATERCOURSE IS COMPLETED.

MS-16 UNDERGROUND UTILITIES:
UNDERGROUND UTILITIES SHALL BE INSTALLED IN ACCORDANCE WITH THE FOLLOWING STANDARDS IN ADDITION TO OTHER APPLICABLE CRITERIA:
A. NO MORE THAN 500 LINEAR FEET OF TRENCH MAY BE OPEN AT ONE TIME.
B. EXCAVATED MATERIAL SHALL BE PLACE ON THE UPHILL SIDE OF TRENCHES.
C. EFFLUENT FOR DEWATERING OPERATIONS SHALL BE FILTERED OR PASSED THROUGH AN APPROVED SEDIMENT TRAPPING DEVISE, OR BOTH, AND DISCHARGED IN A MANNER THAT DOES NOT ADVERSELY AFFECT FLOWING STREAMS OR OFFSITE PROPERTY.
D. RE-STABILIZATION SHALL BE ACCOMPLISHED IN ACCORDANCE WITH THESE REGULATIONS.
E. APPLICABLE SAFETY REGULATIONS SHALL BE COMPILED WITH AT ALL TIMES.

MS-17 CONSTRUCTION ACCESS ROUTES:
WHERE CONSTRUCTION VEHICLE ACCESS ROUTES INTERSECT PAVED PUBLIC ROADS, PROVISIONS SHALL BE MADE TO MINIMIZE THE TRANSPORT OF SEDIMENT BY VEHICULAR TRACKING ONTO THE PAVED SURFACE. WHERE SEDIMENT IS TRANSPORTED ONTO A PAVED OR PUBLIC ROAD SURFACE, THE ROAD SURFACE SHALL BE CLEANED THOROUGHLY AT THE END OF EACH DAY. SEDIMENT SHALL BE REMOVED FROM THE ROADS BY SHOVELING OR SEEPING AND TRANSPORTED TO A SEDIMENT CONTROL DISPOSAL AREA. STREET WASHING SHALL BE ALLOWED ONLY AFTER SEDIMENT IS REMOVED IN THIS MANNER. THIS PROVISION SHALL APPLY TO INDIVIDUAL DEVELOPMENT LOTS, AS WELL AS TO LARGER LAND-DISTURBING ACTIVITIES.

MS-18 TEMPORARY E&S CONTROL MEASURE REMOVAL:
ALL TEMPORARY EROSION AND SEDIMENT CONTROL MEASURES SHALL BE REMOVED WITHIN 30 DAYS AFTER FINAL SITE STABILIZATION OR AFTER TEMPORARY MEASURES ARE NO LONGER NEEDED, UNLESS OTHERWISE AUTHORIZED BY THE CITY INSPECTOR.

MS-19 ADEQUACY OF RECEIVING CHANNELS:
PROPERTIES AND WATERWAYS DOWNSTREAM FROM THE DEVELOPMENT SITE SHALL BE PROTECTED FROM SEDIMENT DEPOSITION, EROSION, AND DAMAGE DUE TO INCREASES IN VOLUME, VELOCITY, AND PEAK FLOW RATES OF STORM WATER RUNOFF FOR THE STATED FREQUENCY STORM OF 24 HOUR DURATION.

MANAGEMENT STRATEGIES

EROSION AND SEDIMENT CONTROL SHALL BE DISCUSSED BETWEEN THE GRADING CONTRACTOR AND THE OWNER PRIOR TO ANY EXCAVATION SO THAT LIMITS OF CONSTRUCTION AND EROSION CONTROL METHODS ARE CLEARLY UNDERSTOOD BY BOTH PARTIES. CONSTRUCTION WILL BE SEQUENCED SO THAT GRADING OPERATIONS CAN BEGIN AND END AS QUICKLY AS POSSIBLE. THERE IS TO BE NO TRACKING OF MUD OR DIRT BY CONSTRUCTION EQUIPMENT ONTO ANY PAVED DRIVES OR ROADS. SEDIMENT TRAPPING MEASURES WILL BE INSTALLED AS A FIRST STEP IN GRADING AND WILL BE SEEDED AND MULCHED IMMEDIATELY FOLLOWING INSTALLATION. SEEDING OR OTHER STABILIZATION WILL FOLLOW IMMEDIATELY AFTER GRADING. AREAS WHICH ARE NOT TO BE DISTURBED WILL BE CLEARLY MARKED BY FLAGS, SIGNS, ETC. AFTER ACHIEVING ADEQUATE STABILIZATION, THE TEMPORARY E&S CONTROLS WILL BE CLEANED AND REMOVED.

D. MAINTENANCE

THE CONTRACTOR IS RESPONSIBLE FOR MAINTAINING ALL EROSION AND SEDIMENT CONTROL MEASURES. THESE SHALL BE CHECKED DAILY AND AFTER EACH SIGNIFICANT RAINFALL; ANY DEFICIENCIES SHALL BE REPAIRED IMMEDIATELY IN ACCORDANCE WITH THE LATEST EDITION OF THE VESCH OR AS DEEMED NECESSARY BY THE LOCAL APPROVING AUTHORITY.

VIII. CONSTRUCTION SEQUENCE

1. INSTALL ALL SILT FENCE BARRIERS AS SHOWN ON THE PLANS.
2. CONTRACTOR SHALL STABILIZE ALL TEMPORARY EROSION CONTROL MEASURES PRIOR TO ANY GRADING, OR SITE CLEARING ACTIVITIES.
3. INSTALL PIPING.
4. TEMPORARY AND PERMANENT SEEDING AND MULCHING TO BE PLACED ON ALL DISTURBED AREAS.
5. CONTRACTOR TO RESTORE ALL AREAS BACK TO EITHER PROPOSED GRADES OR EXISTING CONDITIONS AFTER COMPLETION OF THE PROJECT. ALL DISTURBED AREA, HAUL ROADS, CONSTRUCTION ROADS, LAY DOWN AREA, ETC. SHALL BE RESTORED.
6. ALL TEMPORARY EROSION CONTROL DEVICES SHALL BE REMOVED, AFTER FINAL STABILIZATION OF SITE HAS BEEN ACHIEVED.

EROSION AND SEDIMENT CONTROL NOTES:

E1. PERMANENT OR TEMPORARY SOIL STABILIZATION SHALL BE APPLIED TO DENUDED AREAS WITHIN SEVEN DAYS AFTER FINAL GRADE IS REACHED ON ANY PORTION OF THE SITE. TEMPORARY SOIL STABILIZATION SHALL BE APPLIED WITHIN SEVEN DAYS TO DENUDED AREAS THAT MAY NOT BE AT FINAL GRADE, BUT WILL REMAIN DORMANT (UNDISTURBED) FOR LONGER THAN 30 DAYS. PERMANENT STABILIZATION SHALL BE APPLIED TO AREAS THAT ARE TO BE LEFT DORMANT FOR MORE THAN ONE YEAR.

E2. EXCESS EXCAVATION DISPOSED OF OFF THE SITE SHALL BE DISPOSED OF IN ACCORDANCE WITH THE VIRGINIA EROSION AND SEDIMENT CONTROL HANDBOOK.

E3. UNLESS OTHERWISE INDICATED, ALL VEGETATIVE AND STRUCTURAL EROSION AND SEDIMENT CONTROL PRACTICES WILL BE CONSTRUCTED AND MAINTAINED ACCORDING TO MINIMUM STANDARDS AND SPECIFICATION OF THE LATEST EDITION OF VIRGINIA EROSION AND SEDIMENT CONTROL HANDBOOK AND VIRGINIA REGULATIONS A VAC50-30 EROSION AND SEDIMENT CONTROL REGULATIONS.

E4. EROSION AND SEDIMENT CONTROLS SHALL BE MAINTAINED SO THAT SEDIMENT CARRYING RUNOFF FROM THE SITE WILL NOT ENTER STORM DRAINAGE FACILITIES.

E5. EROSION AND SEDIMENT CONTROLS SHALL BE MAINTAINED UNTIL THE DISTURBED AREA IS STABILIZED.

E6. PROPERTIES ADJOINING THE SITE SHALL BE KEPT CLEAN OF MUD OR SILT CARRIED FROM THE SITE BY VEHICULAR TRAFFIC OR RUNOFF.

E7. THE DISPOSAL OF WASTE MATERIALS REMOVED FROM EROSION AND SEDIMENT CONTROL FACILITIES AND THE DISPOSAL OF THESE FACILITIES SHALL BE IN ACCORDANCE WITH THE VIRGINIA EROSION AND SEDIMENT CONTROL HANDBOOK. SETTLED, TRAPPED, AND FILTERED RESIDUES SHALL NOT BE REUSED AT THIS SITE.

E8. IT IS THE CONTRACTOR'S RESPONSIBILITY TO PERIODICALLY INSPECT ALL SEDIMENT AND EROSION CONTROL DEVICES AND INSURE THAT THEY ARE IN GOOD WORKING ORDER. AT A MINIMUM, ALL DEVICES SHALL BE INSPECTED WEEKLY AND AFTER MAJOR RAINFALL EVENTS. ANY DEVICE NEEDING REPAIRS SHALL BE REPAIRED WITHIN 24 HOURS.

E9. THE CONTRACTOR SHALL INSTALL ADDITIONAL EROSION AND SEDIMENT CONTROL DEVICES IF, DURING THE COURSE OF CONSTRUCTION, CITY OF LYNCHBURG DETERMINES THAT THEY ARE REQUIRED.

E10. THE PLAN APPROVING AUTHORITY, CITY ENGINEER, AND CITY E&S ADMINISTRATOR MUST BE NOTIFIED ONE WEEK PRIOR TO THE PRE-CONSTRUCTION CONFERENCE, ONE WEEK PRIOR TO THE COMMENCEMENT OF LAND DISTURBING ACTIVITIES AND ONE WEEK PRIOR TO THE FINAL INSPECTION.

E11. A COPY OF THE APPROVED EROSION AND SEDIMENT CONTROL PLAN SHALL BE MAINTAINED ON THE SITE AT ALL TIMES.

E12. PRIOR TO COMMENCING LAND DISTURBING ACTIVITIES IN AREAS OTHER THAN INDICATED ON THESE PLANS (INCLUDING , BUT NOT LIMITED TO, OFF SITE BORROW OR WASTE AREAS), THE CONTRACTOR SHALL SUBMIT A SUPPLEMENTAL EROSION AND SEDIMENT CONTROL PLAN TO THE OWNER FOR REVIEW AND APPROVAL BY THE PLAN APPROVING AUTHORITY.

E13. FAILURE TO MAINTAIN CONSTRUCTION ENTRANCES WILL RESULT IN THE INSTALLATION OF A VEHICLE WASHING FACILITY.

E14. ALL EARTHEN STRUCTURES ARE TO BE STABILIZED UPON COMPLETION.

E15. NO EROSION CONTROLS CAN BE REMOVED WITH OUT PERMISSION FROM THE CITY OF LYNCHBURG E&S ADMINISTRATOR OR HIS/HER DESIGNEE.

E16. THE CITY OF LYNCHBURG E&S ADMINISTRATOR OR HIS/HER DESIGNEE HAS THE AUTHORITY TO ADD OR DELETE EROSION CONTROLS ON AN AS NEEDED BASIS.

E17. ALL SILT FENCE ON SITE SHALL BE REINFORCED WITH WIRE BACKING.

SEEDING SPECIFICATIONS:

(TS) TEMPORARY SEEDING-

WINTER - 40 LBS/AC ANNUAL RYE GRASS AND
40 LBS/AC CEREALE (WINTER) RYE
SUMMER - 40 LBS/AC ANNUAL RYE AND 40 LBS/AC FOXTAIL MILLET

FERTILIZER - 1500 LBS. 10-18-10/ACRE
LIME - 2 TONS/ACRE

(PS) PERMANENT SEEDING-

SEASONAL SPECIFICATION - PER ACRE

O2/01 THRU 05/15 100 LBS. TALL FESCUE
2 LBS. RED CLOVER
15 LBS. ANNUAL RYE

05/16 THRU 07/31 120 LBS. TALL FESCUE
2 LBS. RED CLOVER
10 LBS. FOXTAIL MILLET

08/01 THRU 09/15 100 LBS. TALL FESCUE
2 LBS. RED CLOVER
15 LBS. ANNUAL RYE

09/16 THRU 01/31 120 LBS. TALL FESCUE
2 LBS. RED CLOVER
10 LBS. CEREALE RYE

FERTILIZER - ALL SEASONS - 1500 LBS. 10-18-10/ACRE
LIME - ALL SEASONS - 2 TONS/ACRE

(MU) * A MULCH COVER IS REQUIRED ON EVERY SEEDING

* STRAW AT 80 BALES PER ACRE OR AN APPROVED MANUFACTURED MULCH/STABILIZATION MATERIAL

VIRGINIA EROSION AND SEDIMENT CONTROL REGULATIONS MINIMUM STANDARD #1

PERMANENT OR TEMPORARY SOIL STABILIZATION SHALL BE APPLIED TO DENUDED AREAS WITHIN 7 DAYS AFTER FINAL GRADE IS REACHED ON ANY PORTION OF THE SITE.

TEMPORARY SOIL STABILIZATION SHALL BE APPLIED WITHIN SEVEN DAYS TO DENUDED AREAS THAT MAY NOT BE AT FINAL GRADE BUT WILL REMAIN DORMANT (UNDISTURBED) FOR LONGER THAN 30 DAYS. PERMANENT STABILIZATION SHALL BE APPLIED TO AREAS THAT ARE TO BE LEFT DORMANT FOR MORE THAN ONE YEAR.

E&S MAINTENANCE SECTIONS

SECTION 3.05- SILT FENCE

MAINTENANCE
1. SILT FENCES SHALL BE INSPECTED IMMEDIATELY AFTER EACH RAINFALL AND AT LEAST DAILY DURING PROLONGED RAINFALL. ANY REQUIRED REPAIRS SHALL BE MADE IMMEDIATELY.
2. CLOSE ATTENTION SHALL BE PAID TO THE REPAIR OF DAMAGED SILT FENCE RESULTING FROM END RUNS AND UNDERCUTTING.
3. SHOULD THE FABRIC ON A SILT FENCE DECOMPOSE OR BECOME INEFFECTIVE PRIOR TO THE END OF THE EXPECTED USABLE LIFE AND THE BARRIER STILL BE NECESSARY, THE FABRIC SHALL BE REPLACED PROMPTLY.
4. SEDIMENT DEPOSITS SHOULD BE REMOVED AFTER EACH STORM EVENT. THEY MUST BE REMOVED WHEN DEPOSITS REACH APPROXIMATELY ONE-HALF THE HEIGHT OF THE BARRIER.
5. ANY SEDIMENT DEPOSITS REMAINING IN PLACE AFTER THE SILT FENCE IS NO LONGER REQUIRED SHALL BE DRESSED TO CONFORM WITH THE EXISTING GRADE, PREPARED AND SEEDED.

E&S MAINTENANCE SECTIONS

SECTION 3.32- PERMANENT SEEDING

MAINTENANCE
1. EVEN WITH CAREFUL, WELL-PLANNED SEEDING OPERATIONS, FAILURES CAN OCCUR. WHEN IT IS CLEAR THAT PLANTS HAVE NOT GERMINATED ON AN AREA OR HAVE DIED THESE AREAS MUST BE RESEEDED IMMEDIATELY TO PREVENT EROSION DAMAGE. HOWEVER, IT IS EXTREMELY IMPORTANT TO DETERMINE FOR WHAT REASON GERMINATION DID NOT TAKE PLACE AND MAKE ANY CORRECTIVE ACTION NECESSARY PRIOR TO RESEEDING THE AREA. HEALTHY VEGETATION IS THE MOST EFFECTIVE EROSION CONTROL AVAILABLE.

SECTION 3.35- MULCHING

MAINTENANCE
1. ALL MULCHES AND SOIL COVERINGS SHOULD BE INSPECTED PERIODICALLY (PARTICULARLY AFTER RAINSTORMS) TO CHECK FOR EROSION. WHERE EROSION IS OBSERVED IN MULCHED AREAS, ADDITIONAL MULCH SHOULD BE APPLIED. NETS AND MATS SHOULD BE INSPECTED AFTER RAINSTORMS FOR DISLOCATION OR FAILURE. IF WASHOUTS OR BREAKAGE OCCUR, RE-INSTALL NETTING OR MATTING AS NECESSARY AFTER REPAIRING DAMAGE TO THE SLOPE OR DITCH. INSPECTIONS SHOULD TAKE PLACE UP UNTIL GRASSES ARE FIRMLY ESTABLISHED. WHERE MULCH IS USED IN CONJUNCTION WITH ORNAMENTAL PLANTINGS, INSPECT PERIODICALLY THROUGHOUT THE YEAR TO DETERMINE IF MULCH IS MAINTAINING COVERAGE OF THE SOIL SURFACE; REPAIR AS NEEDED.

GRAVEL CURB INLET SEDIMENT FILTER (IP)
VESHC STD. 3.07

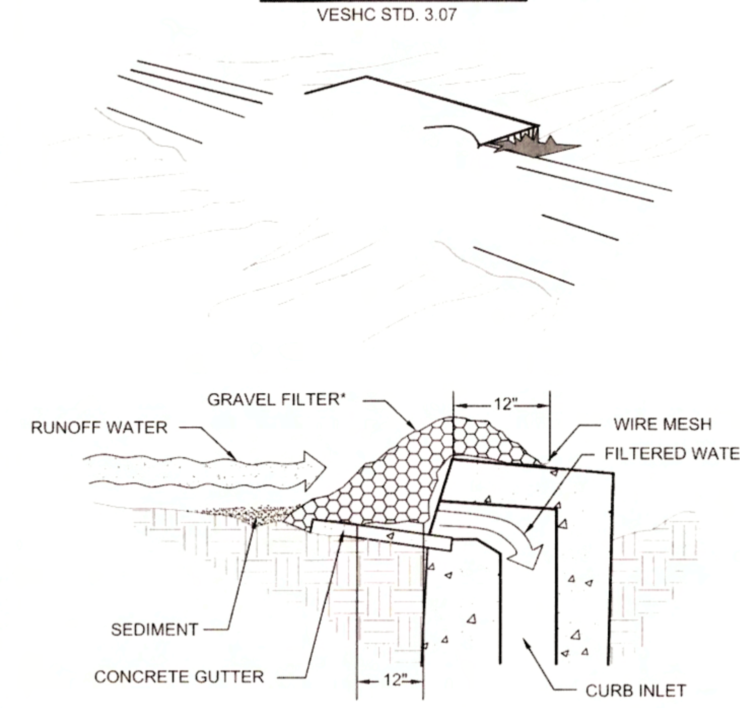

SPECIFIC APPLICATION

THIS METHOD OF INLET PROTECTION IS APPLICABLE AT CURB INLETS WHERE PONDING IN FRONT OF THE STRUCTURE IS NOT LIKELY TO CAUSE INCONVENIENCE OR DAMAGE TO ADJACENT STRUCTURES AND UNPROTECTED AREAS.

* GRAVEL SHALL BE VDOT #3, #357 OR 5 COARSE AGGREGATE.

SOURCE: VA. DSWC PLATE 3.07-6

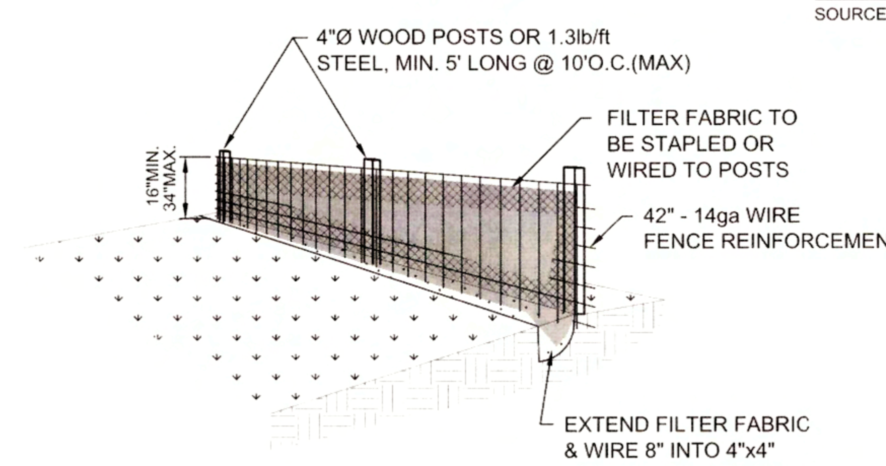

(SF) SILT FENCE
(WITH WIRE SUPPORT)
N.T.S.

EROSION AND SEDIMENT CONTROL MAINTENANCE:
THE CONTRACTOR IS RESPONSIBLE FOR MAINTAINING ALL EROSION CONTROL DEVICES FOR THE DURATION OF THE PROJECT. ALL EROSION AND SEDIMENT CONTROL DEVICES SHALL BE CHECKED WEEKLY AND AFTER EACH SIGNIFICANT RAINFALL TO INSURE THAT ALL DEVICES ARE IN PLACE AND FUNCTIONING AS REQUIRED. ALL EROSION AND SEDIMENT CONTROL DEVICES SHALL BE MAINTAINED PER THE LATEST EDITION OF THE VIRGINIA EROSION AND SEDIMENT CONTROL HANDBOOK. IN GENERAL, IF THE SILT BUILT UP BEHIND A BARRIER BECOMES AS DEEP AS 9 INCHES, THE SILT IS TO BE REMOVED AND THE BARRIER REPAIRED OR REPLACED. AFTER COMPLETION OF THE PROJECT, AND PERMANENT SEEDING HAS BEEN ESTABLISHED, EROSION CONTROL DEVICES AND ANY SILT BUILT UP SHALL BE REMOVED. DISTURBED AREAS DUE TO THIS CLEANUP OPERATION SHALL BE REPAIRED, RESEEDED AND REMULCHED.

EROSION AND SEDIMENT CONTROL DEVICES:
PERIMETER EROSION AND SEDIMENT CONTROL DEVICES SHALL BE INSTALLED PRIOR TO ANY LAND DISTURBING ACTIVITY. AS CONSTRUCTION PROCEEDS, ALL ADDITIONAL EROSION AND SEDIMENT CONTROL DEVICES SHALL BE INSTALLED AS SOON AS POSSIBLE. EROSION AND SEDIMENT CONTROL DEVICES AS SHOWN ON THE PLAN ARE A MINIMUM AND THE PROJECT CONDITION MAY DICTATE ADDITIONAL CONTROL. ALL EROSION AND SEDIMENT CONTROL DEVICES SHALL BE PER THE LATEST EDITION OF THE VIRGINIA EROSION AND SEDIMENT CONTROL HANDBOOK.

2	8/25/14	CITY COMMENTS
1	7/18/14	CITY COMMENTS

HURT & PROFFITT
2524 LANGHORNE ROAD
LYNCHBURG VA 24501
800.242.4906 TOLL FREE
434.847.7796 MAIN
434.847.0047 FAX
ENGINEERING • SURVEYING • LAND DEVELOPMENT • ENVIRONMENTAL
GEOTECHNICAL • CONSTRUCTION TESTING & INSPECTION • CULTURAL RESOURCES

E&S NOTES AND DETAILS
FOR
PARK AVENUE WATERLINE REPLACEMENT PROJECT
CITY OF LYNCHBURG, VIRGINIA

PROJECT NO.	20140638
LATITUDE:	37°24'16" N
LONGITUDE:	79°09'50" W
DATE:	7/16/14
DRAWN BY:	WCH
CHECKED BY:	BLC

COMMONWEALTH OF VIRGINIA
BRIAN L. COSSMAN
Lic. No. 039637
8/25/14
PROFESSIONAL ENGINEER

SHEET NO.
C0.1

Aug 25, 2014 - 11:49am \\DATA01\Projects\2014\20140638\CAD\Cover.dwg