CITY OF LYNCHBURG
GENERATOR UPGRADES
LYNCHBURG, VIRGINIA

FOR CONSTRUCTION
DECEMBER 13, 2013

GENERAL INFORMATION:

PROJECT INFORMATION:
AGENCY: CITY OF LYNCHBURG

ADDRESSES:
FIRE STATION #1
801 CLAY STREET, LYNCHBURG, VIRGINIA 24502

FIRE STATION #7
2624 LAKESIDE DRIVE, LYNCHBURG, VIRGINIA 24502

PUBLIC WORKS ADMINISTRATION BUILDING
1700 MEMORIAL AVENUE, LYNCHBURG, VIRGINIA 24501

APPLICABLE CODES:
BUILDING CODES: 2009 VIRGINIA UNIFORM STATEWIDE BUILDING CODE – VUSBC (EFFECTIVE MARCH 1, 2011)

NATIONAL ELECTRICAL CODE – NFPA–70 (2008)

ASBESTOS DISCLOSURE STATEMENT:

AN ASBESTOS INSPECTION WAS NOT PERFORMED. THE CONTRACTOR SHALL NOTIFY THE CITY'S PROJECT MANAGER OF ANY SUSPECTED MATERIALS FOR REMOVAL BY THE CITY OF LYNCHBURG.

LEAD PAINT DISCLOSURE STATEMENT:

A LEAD–BASED PAINT INSPECTION WAS NOT PERFORMED. THE CONTRACTOR SHALL NOTIFY THE CITY'S PROJECT MANAGER OF ANY SUSPECTED MATERIALS FOR REMOVAL BY THE CITY OF LYNCHBURG.

GENERAL NOTES:

1. THESE DRAWINGS ARE SCHEMATIC IN NATURE AND ARE NOT INTENDED FOR USE AS FABRICATION DRAWINGS. THESE DRAWINGS INDICATE THE GENERAL AND APPROXIMATE SIZE AND LOCATION OF MATERIAL. FIELD VERIFY ALL DIMENSIONS AND LOCATIONS PRIOR TO BEGINNING WORK. ALL UTILITIES NOTED ON PLANS ARE APPROXIMATE AND CONTRACTOR SHALL FIELD VERIFY LOCATION.
2. ALL WORK SHALL BE INSTALLED IN ACCORDANCE WITH APPLICABLE CODES AND REGULATIONS, INCLUDING, BUT NOT LIMITED TO, THE 2009 VIRGINIA UNIFORM STATEWIDE BUILDING CODE AND ASSOCIATED CODES OF REFERENCE. REFER TO APPLICABLE CODES LIST THIS SHEET.
3. CONTRACTOR SHALL OBTAIN ALL BUILDING AND TRADE PERMITS FOR CONSTRUCTION, HOWEVER THE CITY OF LYNCHBURG SHALL WAIVE ALL FEES REQUIRED FOR PERMITS.
4. ALL MATERIAL SHALL BE NEW UNLESS OTHERWISE NOTED. MATERIALS ARE BASED ON THE INDICATED MANUFACTURERS/MODELS AND ARE INTENDED ONLY TO SHOW THE GENERAL SIZE, CONFIGURATION, LOCATION, CONNECTIONS, AND SUPPORT FOR INDICATED MATERIAL WITH RELATION TO OTHER BUILDING SYSTEMS. MATERIAL BY ANY MANUFACTURER THAT MEETS THE SCHEDULED CRITERIA IS ACCEPTABLE. CONTRACTOR SHALL BE RESPONSIBLE FOR COORDINATING ACTUAL INSTALLED MATERIAL AND EQUIPMENT AND ASSOCIATED CHANGES.
5. THE CONTRACTOR SHALL COORDINATE THE WORK WITH EXISTING CONDITIONS, INCLUDING BEAMS, COLUMNS, AND OTHER OBSTRUCTIONS, WHETHER OR NOT SUCH IS SHOWN ON DRAWINGS.
6. THE CONTRACTOR SHALL COORDINATE THE WORK BETWEEN ALL TRADES. MATERIAL AND EQUIPMENT LOCATIONS SHALL BE COORDINATED BETWEEN ARCHITECTURAL, MECHANICAL, ELECTRICAL, AND DEMOLITION PLANS TO AVOID CONFLICTS.
7. EXISTING MATERIAL TO BE REMOVED SHALL BE REMOVED CAREFULLY TO AVOID DAMAGING MATERIAL TO REMAIN. THE CONTRACTOR SHALL BE RESPONSIBLE FOR DAMAGE THAT OCCURS TO EXISTING MATERIAL TO REMAIN OR TO BE RELOCATED DURING DEMOLITION AND CONSTRUCTION.
8. ALL MATERIAL AND EQUIPMENT SHALL BE INSTALLED ACCORDING TO MANUFACTURER'S WRITTEN INSTALLATION INSTRUCTIONS, MAINTAINING ALL REQUIRED CLEARANCES AND WITH ALL COMPONENTS ACCESSIBLE AND SERVICEABLE.
9. CONTRACTOR SHALL PROVIDE MATERIAL DATA SUBMITTALS FOR ALL NEW MATERIAL WHERE REQUIRED BY EACH DISCIPLINE. A LIST OF SUBMITTALS IS PROVIDED ON THIS DRAWING. REFER TO INDIVIDUAL SHEETS FOR ADDITIONAL SUBMITTAL REQUIREMENTS.
10. THE CONTRACTOR SHALL BE RESPONSIBLE FOR ASSEMBLING OPERATION AND MAINTENANCE MANUALS CONTAINING ALL MATERIAL SUBMITTALS, INSTALLATION AND OPERATING INSTRUCTIONS, AND WARRANTY INFORMATION. THREE (3) COPIES OF O&M MANUALS SHALL BE SUBMITTED TO THE OWNER AT THE TIME OF SUBSTANTIAL COMPLETION.
11. THE CONTRACTOR SHALL BE RESPONSIBLE FOR MAINTAINING A SET OF AS–BUILT DRAWINGS ON SITE WHICH INDICATE IN RED ALL DEVIATIONS FROM ORIGINAL CONSTRUCTION DOCUMENTS, INCLUDING APPROVED CONSTRUCTION CHANGE ORDERS. AS–BUILT DRAWINGS SHALL BE SUBMITTED TO THE OWNER AT THE TIME OF SUBSTANTIAL COMPLETION. AS–BUILT DRAWINGS SHALL BE CLEARLY LEGIBLE AND COMPLETE.
12. CONTRACTOR SHALL KEEP PUBLIC AREAS FREE OF TRASH AND CONSTRUCTION DEBRIS AND CLEAN ENTIRE WORK AREA ON A DAILY BASIS.
13. TEMPORARY POWER AND WATER SERVICE ARE AVAILABLE FOR THE CONTRACTOR'S USE. CONTRACTOR SHALL COORDINATE ACCESS WITH OWNER AND SHALL PROVIDE ANY REQUIRED TEMPORARY CONNECTIONS AND EXTENSIONS.
14. CONTRACTOR SHALL PROVIDE PORTABLE TOILETS FOR CONSTRUCTION PERSONNEL.
15. CONTRACTOR SHALL VISIT THE SITE TO BECOME FAMILIAR WITH THE SCOPE OF WORK AND TO VERIFY EXISTING CONDITIONS PRIOR TO BIDDING THIS PROJECT. ANY DISCREPANCIES OR AMBIGUOUS ITEMS MUST BE REPORTED TO THE OWNER FOR CLARIFICATION PRIOR TO BIDDING.
16. THE CONTRACTOR IS TYPICALLY PERMITTED TO WORK BETWEEN 7:00 AM AND 6:00 PM MONDAY THRU FRIDAY. WORK OUTSIDE THESE HOURS SHALL BE COORDINATED WITH OWNER'S PROJECT MANAGER DURING CONSTRUCTION.
17. CONTRACTOR SHALL PROVIDE A DUST–PROOF BARRIER BETWEEN THE CONSTRUCTION ZONE AND OCCUPIED PORTIONS OF THE BUILDING. CONTRACTOR SHALL FILTER EXISTING HVAC GRILLES IN WORK AREA TO MITIGATE SPREAD OF DUST INTO OCCUPIED AREAS OF THE BUILDING.
18. CONTRACTOR SHALL PROTECT THE BUILDING, ADJACENT FEATURES, ROADWAYS, WALKWAYS, SITE IMPROVEMENTS, ETC. AS REQUIRED FROM DAMAGE AND CORRECT DAMAGE RESULTING FROM CONSTRUCTION ACTIVITIES TO THE SATISFACTION OF THE OWNER.
19. CONTRACTOR SHALL COLLECT DEMOLISHED MATERIALS AND PLACE IN APPROPRIATE DISPOSAL CONTAINERS. DEMOLISHED MATERIALS SHALL BE PROMPTLY REMOVED FROM THE OWNER'S PROPERTY AND DISPOSED OF LEGALLY.
20. CONTRACTOR SHALL COORDINATE MATERIAL STORAGE AND DUMPSTER LOCATION WITH OWNER DURING CONSTRUCTION.
21. CONTRACTOR SHALL PROVIDE PRE–DEMOLITION PHOTOGRAPHIC OR VIDEOGRAPHIC DOCUMENTATION TO SHOW EXISTING CONDITIONS OF FINISHED SURFACES IN WORK AREA AND ADJOINING CONSTRUCTION INCLUDING SITE STORAGE AND ACCESS AREAS A MINIMUM OF 10 WORKING DAYS PRIOR TO COMMENCEMENT OF WORK.
22. CONTRACTOR SHALL NOTIFY OWNER SEVEN(7) DAYS IN ADVANCE OF ANY POWER INTERRUPTIONS INCLUDING BUT NOT LIMITED TO WATER, COMMUNICATIONS, ETC. COORDINATE OUTAGE WITH OWNER.
23. DEFINITIONS:

    FURNISH: SUPPLY AND DELIVER TO PROJECT SITE FOR INSTALLATION BY OTHERS.

    INSTALL: INSTALL ITEMS FURNISHED BY OTHERS, INCLUDING UNLOADING, TEMPORARILY STORING, UNPACKING, AND ASSEMBLY.

    PROVIDE: FURNISH AND INSTALL, COMPLETE AND READY FOR THE INTENDED USE.

    REMOVE: DETACH ITEMS FROM EXISTING CONSTRUCTION AND LEGALLY DISPOSE OF THEM OFF–SITE UNLESS INDICATED TO BE REMOVED AND SALVAGED OR REMOVED AND REINSTALLED.

    REMOVE AND REINSTALL: DETACH ITEMS FROM EXISTING CONSTRUCTION, PREPARE FOR REUSE, AND REINSTALL WHERE INDICATED.

    REMOVE AND SALVAGE: CAREFULLY DETACH FROM EXISTING CONSTRUCTION, IN A MANNER TO PREVENT DAMAGE, AND DELIVER TO OWNER.

DRAWING LIST:

DRAWING NO	TITLE
T1	TITLE SHEET
D1	FIRE STATION #1 PARTIAL PLAN AND POWER DISTRIBUTION DIAGRAM
D2	FIRE STATION #7 PARTIAL FLOOR/SITE PLAN AND SINGLE LINE DIAGRAM
D3	PUBLIC WORKS ADMINISTRATION BUILDING PARTIAL FIRST FLOOR AND POWER DISTRIBUTION DIAGRAM
D4	ADDITIVE BID ITEM NO. 1 FIRE STATION #7 PARTIAL PLAN SHOP BLDG AND SHOP POWER DISTRIBUTION DIAGRAM
E1	LEGEND, ABBREVIATIONS, AND GENERAL NOTES
E2	FIRE STATION #1 PARTIAL TERRACE AND SITE PLAN, PROPOSED POWER DISTRIBUTION DIAGRAM
E3	FIRE STATION #7 PARTIAL FLOOR AND SITE PLAN, PROPOSED POWER DISTRIBUTION DIAGRAM
E4	PUBLIC WORKS ADMINISTRATION BUILDING PARTIAL FIRST FLOOR AND SITE PLAN, PROPOSED POWER DISTRIBUTION DIAGRAM
E5	DETAILS
E6	INTERNET MONITORING
E7	SCHEDULES
E8	ADDITIVE BID ITEM NO. 1 – FIRE STATION #7 SHOP BLDG PLAN AND PROPOSED POWER DISTRIBUTION DIAGRAM
E9	ADDITIVE BID ITEM NO. 1 – SCHEDULES

SUBMITTALS LIST:

SUBMITTALS LIST TO BE VERIFIED BY CONTRACTOR WITH REQUIREMENTS THROUGHOUT THE CONSTRUCTION DOCUMENTS:

1. WORK SCHEDULE
2. SCHEDULE OF VALUES
3. GENERATORS
4. AUTOMATIC TRANSFER SWITCHES
5. PANELBOARDS
6. RECEPTACLES
7. SOIL REPORT
8. GROUNDING MATERIALS
9. CONDUIT, WIRE, AND CABLE
10. CONCRETE MIX
11. SNMP INTERNET APPLIANCE

VIRGINIA A&E, PLLC
1115 VISTA PARK DRIVE
FOREST, VA 24551
PHONE: (434) 316-6001

Virginia A&E

COMMONWEALTH OF VIRGINIA
Scott Burger
SCOTT F. BURGER
Lic. No. 034338
12/13/2013
PROFESSIONAL ENGINEER

VAE PROJECT NO: 13104

Job No.: 13104

Drawing No.:
T1

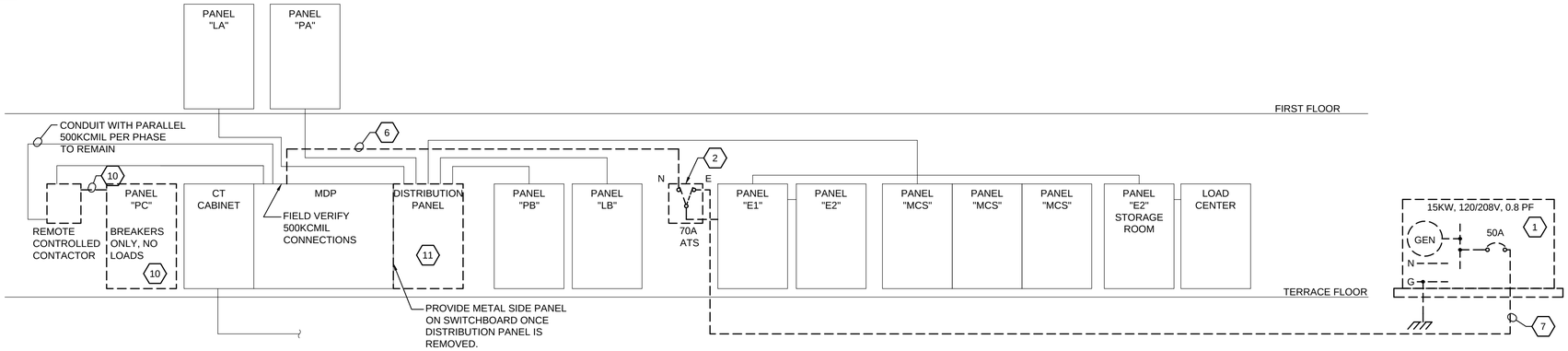

SINGLE LINE DIAGRAM

SCALE: NONE

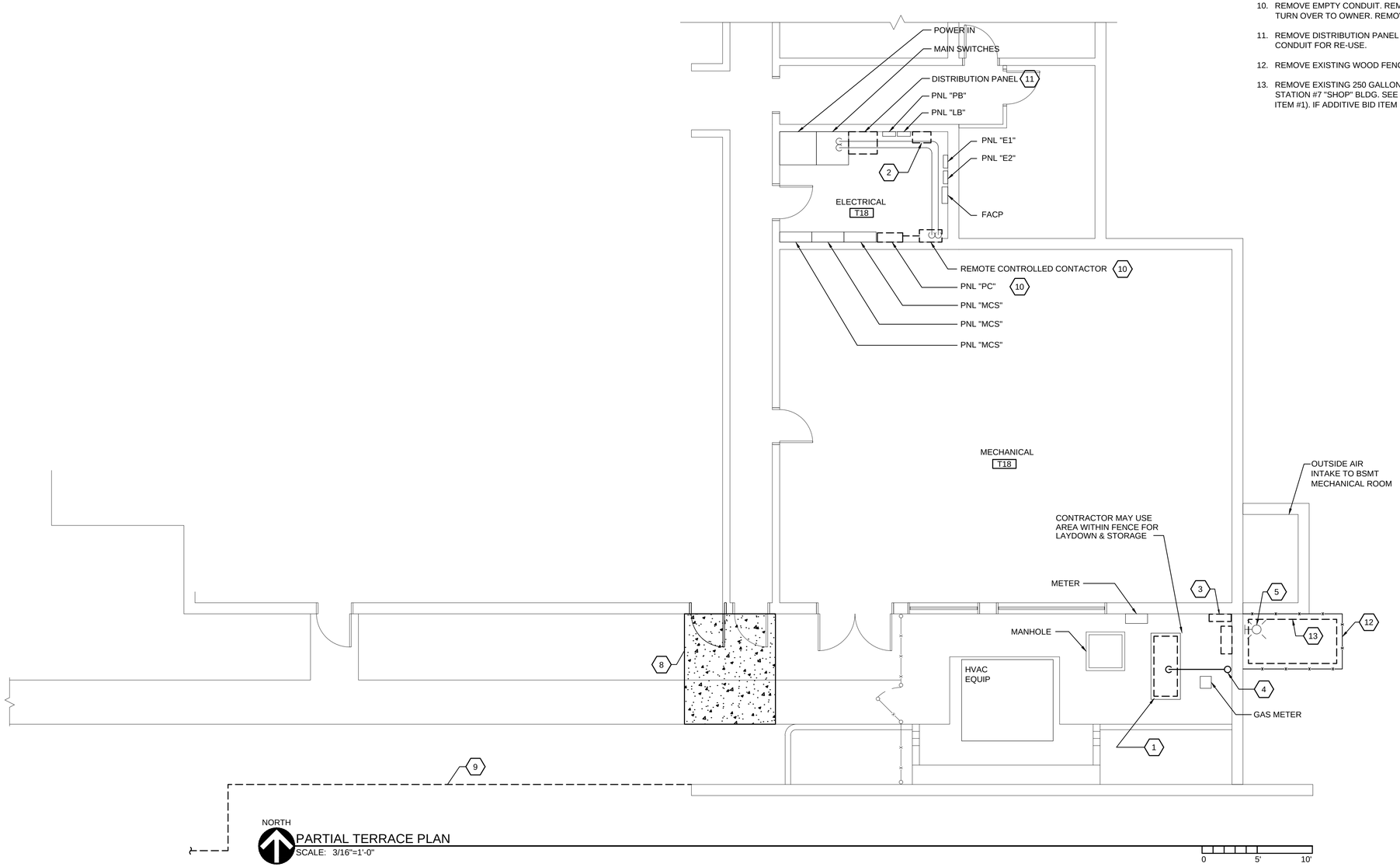

PARTIAL TERRACE PLAN

SCALE: 3/16"=1'-0"

DEMOLITION SYMBOLS LEGEND:

- XX — DEMOLITION NOTE
- LIMIT OF DEMOLITION

DEMOLITION NOTES:

1. REMOVE EXISTING 15KW GENERATOR AND INSTALL AT STATION #1 SHOP PER DWG E8 (ADDITIVE BID ITEM #1). IF ADDITIVE BIG ITEM IS NOT ACCEPTED, TURN GENERATOR OVER TO OWNER.
2. REMOVE EXISTING 70 AMP AUTOMATIC TRANSFER SWITCH AND TURN OVER TO OWNER.
3. REMOVE EXISTING GENERATOR FUEL EQUIPMENT AND INSTALL AT STATION #1 SHOP PER DWG E8.
4. REMOVE EXHAUST PIPING.
5. DISCONNECT ALARM AND RETAIN FOR RE-USE.
6. REMOVE EXISTING CONDUCTORS AND CONDUIT.
7. LEAVE CONDUIT, PULL OUT CONDUCTORS.
8. SAWCUT CONCRETE SIDEWALK FOR EMERGENCY POWER CONDUITS.
9. REMOVE DECORATIVE FENCE AND RETAIN FOR RE-INSTALLATION.
10. REMOVE EMPTY CONDUIT. REMOVE REMOTE CONTROLLED CONTACTOR AND TURN OVER TO OWNER. REMOVE (E)PANEL "PC" AND TURN OVER TO OWNER.
11. REMOVE DISTRIBUTION PANEL AND TURN OVER TO OWNER. RETAIN CABLE AND CONDUIT FOR RE-USE.
12. REMOVE EXISTING WOOD FENCE (APPROX 4' HIGH).
13. REMOVE EXISTING 250 GALLON FUEL CONVAULT TANK AND RELOCATE TO STATION #7 "SHOP" BLDG. SEE DWG E8 FOR INSTALLATION DETAILS (ADDITIVE BID ITEM #1). IF ADDITIVE BID ITEM IS NOT ACCEPTED, TURN TANK OVER TO OWNER.

NO.	BY	REVISIONS	DATE
0	SFB	FOR CONSTRUCTION	13 DEC 13

COMMONWEALTH OF VIRGINIA
Scott Burger
SCOTT F. BURGER
Lic. No. 034338
12/13/2013
PROFESSIONAL ENGINEER

Virginia A & E
VIRGINIA A&E, PLLC
1115 VISTA PARK DRIVE
FOREST, VIRGINIA 24551
PHONE: (434) 316-6001

CITY OF LYNCHBURG
BACKUP
GENERATOR REPLACEMENT

CLIENT PROJECT CODE:
LYNCHBURG, VIRGINIA

FIRE STATION #1
PARTIAL PLAN AND
POWER DISTRIBUTION DIAGRAM

DATE: DEC 13, 2013

PROJECT NO: 13104

Full Scale Verification
0" 1"

Drawing No.:
D1

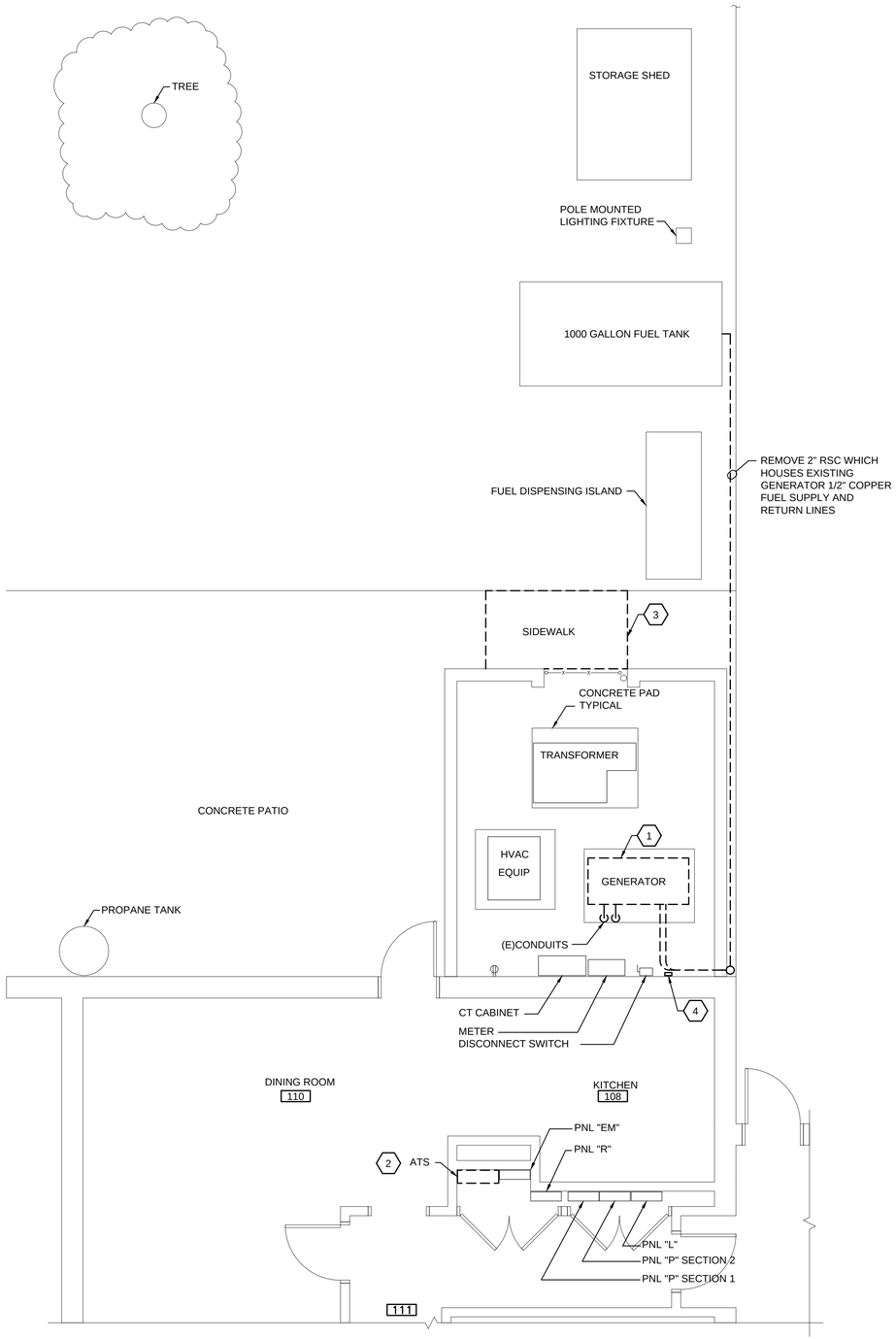

PARTIAL FLOOR AND SITE PLAN
SCALE: 1/4"=1'-0"

0 1' 5' 10'

DEMOLITION SYMBOLS LEGEND:

XX DEMOLITION NOTE

LIMIT OF DEMOLITION

XX DEMOLITION NOTES:

1. REMOVE EXISTING 15KW GENERATOR AND TURN OVER OWNER.
2. REMOVE EXISTING 70 AMP AUTOMATIC TRANSFER SWITCH AND TURN OVER TO OWNER.
3. SAWCUT CONCRETE SIDEWALK TO PREPARE ROUTE FOR NEW EMERGENCY FEEDER UNDERGROUND CONDUITS.
4. RELOCATE (E)JUNCTION BOX TO PROVIDE CLEARANCE FOR NEW TRANSFER SWITCH.
5. REMOVE CABLE AND CONDUIT FROM (E)AUTOMATIC TRANSFER SWITCH TO (E)PANEL "P" SECTION 1.
6. REMOVE CABLE AND CONDUIT FROM (E)GENERATOR TO (E0AUTOMATIC TRANSFER SWITCH.
7. REMOVE CABLE AND CONDUIT FROM (E)PANEL "P" SECTION 1 TO (E)CT CABINET.

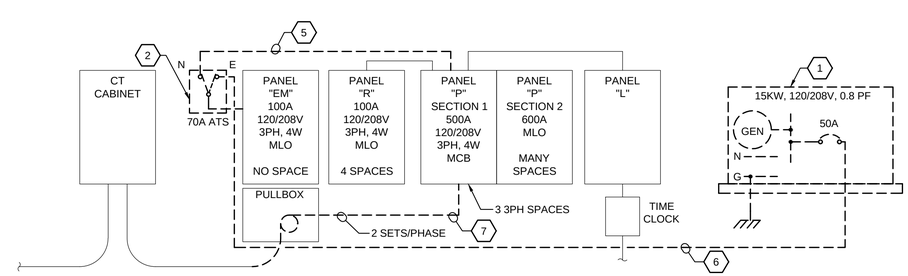

SINGLE LINE DIAGRAM
SCALE: NONE

NO.	BY	REVISIONS	DATE
0	SFB	FOR CONSTRUCTION	13 DEC 13

COMMONWEALTH OF VIRGINIA
Scott Burger
SCOTT F. BURGER
Lic. No. 034338
12/13/2013
PROFESSIONAL ENGINEER

Virginia A & E
VIRGINIA A&E, PLLC
1115 VISTA PARK DRIVE
FOREST, VIRGINIA 24551
PHONE: (434) 316-6001

CITY OF LYNCHBURG
BACKUP
GENERATOR REPLACEMENT

CLIENT PROJECT CODE:
LYNCHBURG, VIRGINIA

FIRE STATION #7
PARTIAL FLOOR/SITE PLAN
AND POWER DISTRIBUTION
DIAGRAM

DATE: DEC 13, 2013
PROJECT NO: 13104

Full Scale Verification
0" 1"

Drawing No.:
D2

DEMOLITION SYMBOLS LEGEND:

- (XX) DEMOLITION NOTE
- LIMIT OF DEMOLITION

(XX) DEMOLITION NOTES:

1. REMOVE EXISTING 15KW GENERATOR AND SUB-BASE FUEL TANK. TURN OVER TO OWNER.
2. REMOVE EXISTING AUTOMATIC TRANSFER SWITCH. TURN OVER TO OWNER.
3. REMOVE CONDUCTORS AND CONDUIT. PATCH WALL TO MATCH ADJACENT.
4. REMOVE CONDUCTORS AND CONDUIT. WIREWAY TO REMAIN.
5. REMOVE CONDUCTORS AND CONDUIT.

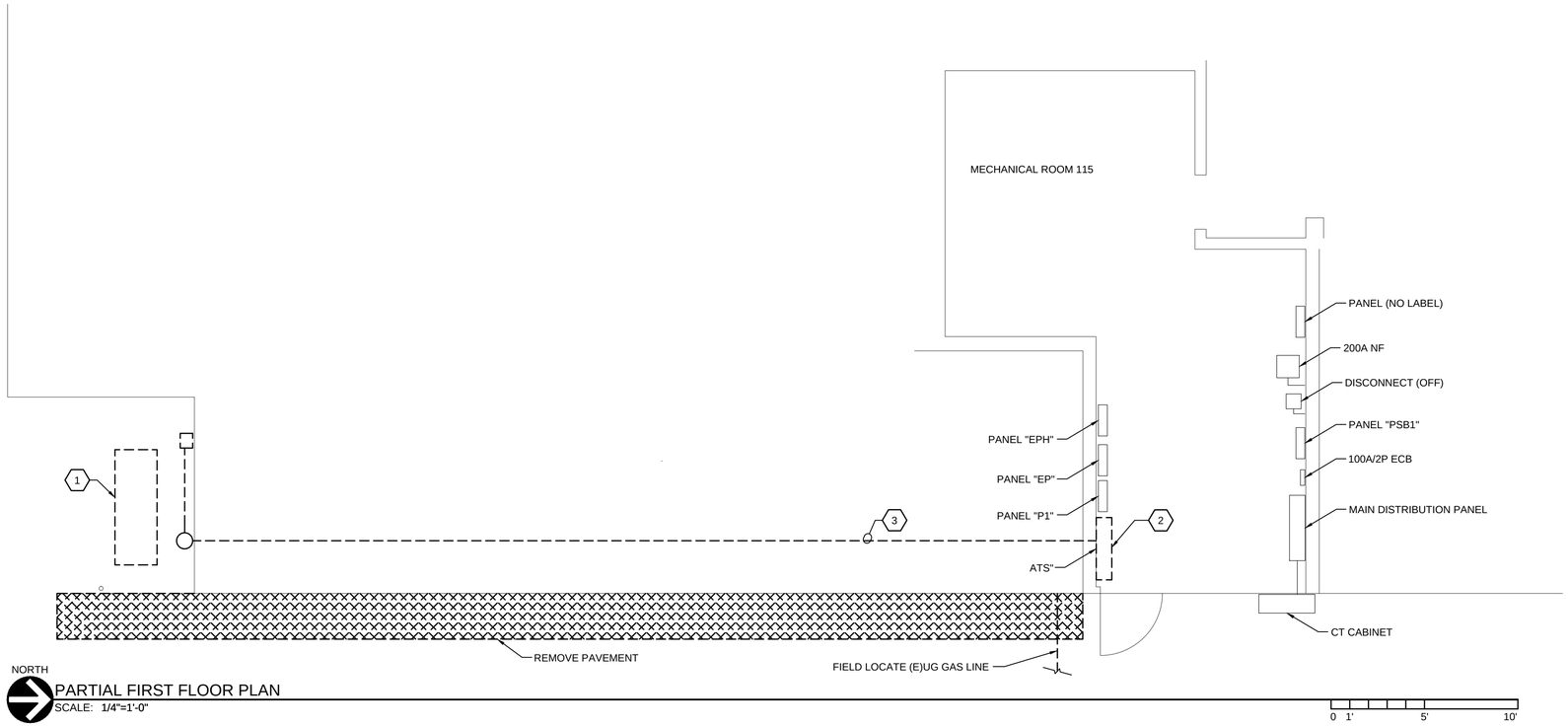

PARTIAL FIRST FLOOR PLAN
SCALE: 1/4"=1'-0"

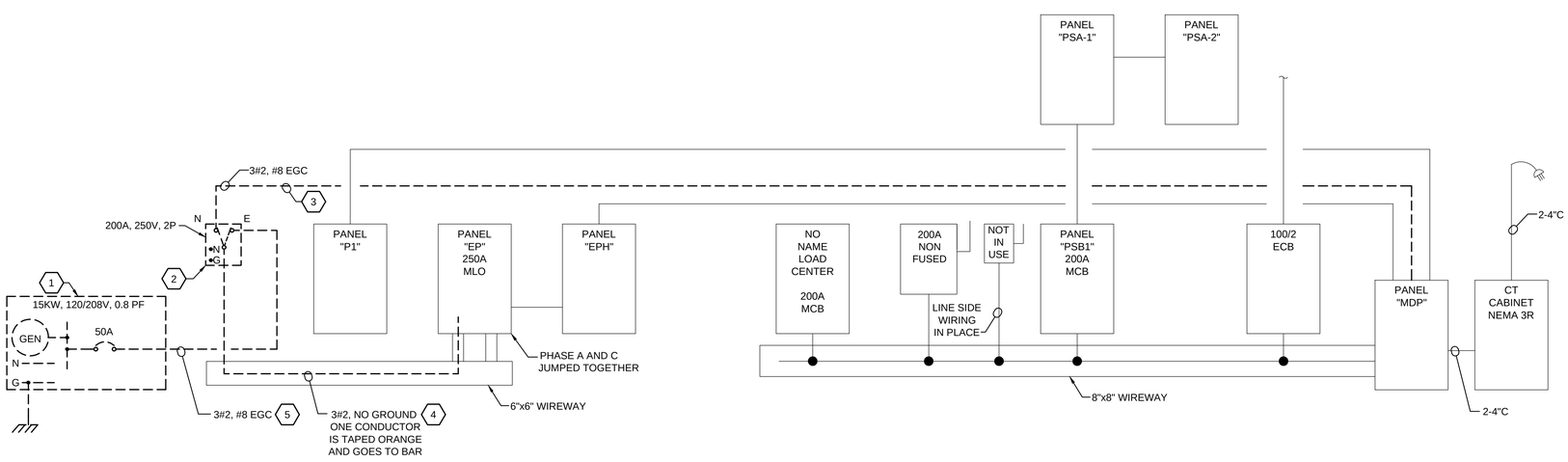

POWER DISTRIBUTION DIAGRAM
SCALE: NONE

NO.	BY	REVISIONS	DATE
0	SFB	FOR CONSTRUCTION	13 DEC 13

COMMONWEALTH OF VIRGINIA
Scott Burger
SCOTT F. BURGER
Lic. No. 034338
12/13/2013
PROFESSIONAL ENGINEER

Virginia A & E
VIRGINIA A&E, PLLC
1115 VISTA PARK DRIVE
FOREST, VIRGINIA 24551
PHONE: (434) 316-6001

CITY OF LYNCHBURG
BACKUP
GENERATOR REPLACEMENT
CLIENT PROJECT CODE:
LYNCHBURG, VIRGINIA

PUBLIC WORKS
ADMINISTRATION
BUILDING
PARTIAL FIRST FLOOR PLAN
AND POWER DISTRIBUTION
DIAGRAM

DATE: DEC 13, 2013
PROJECT NO: 13104

Full Scale Verification
0" 1"

Drawing No.:
D3

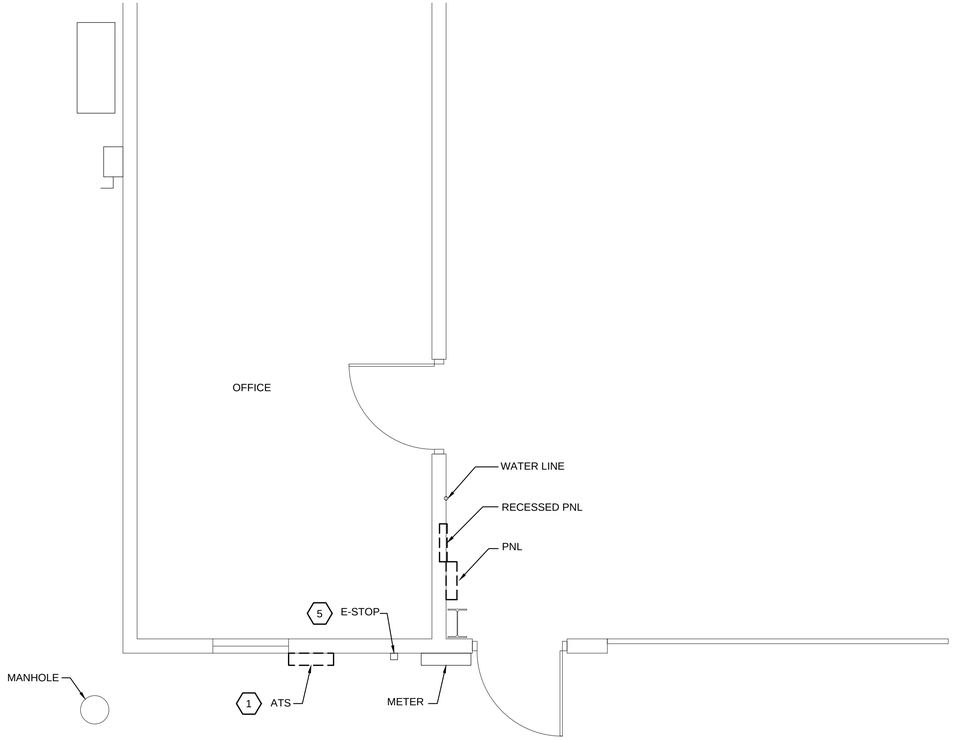

PARTIAL PLAN SHOP BLDG

SCALE: 3/8"=1'-0"

0 6" 1' 2' 3' 4' 5'

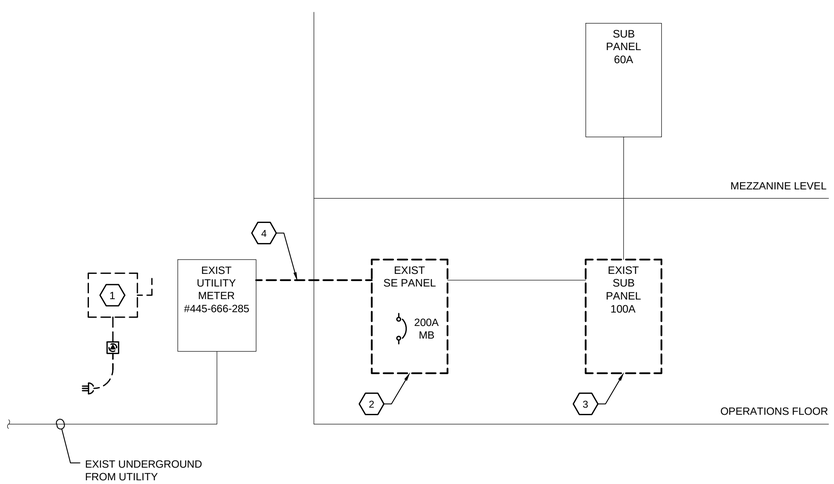

SHOP POWER DISTRIBUTION DIAGRAM

SCALE: NONE

DEMOLITION SYMBOLS LEGEND:

XX DEMOLITION NOTE

LIMIT OF DEMOLITION

XX DEMOLITION NOTES:

1. REMOVE (E)MANUAL TRANSFER SWITCH AND DELIVER TO OWNER.
2. REMOVE (E) PANELBOARD. RETAIN BRANCH CIRCUITS FOR RE-USE.
3. REMOVE (E) PANELBOARD. RETAIN BRANCH CIRCUITS FOR RE-USE.
4. INTERCEPT SERVICE ENTRANCE WIRING AND RETAIN FOR RE-USE.
5. REMOVE (E) E-STOP.

NO.	BY	REVISIONS	DATE
0	SFB	FOR CONSTRUCTION	13 DEC 13

COMMONWEALTH OF VIRGINIA
Scott Burger
SCOTT F. BURGER
Lic. No. 034338
12/13/2013
PROFESSIONAL ENGINEER

Virginia A & E
VIRGINIA A&E, PLLC
1115 VISTA PARK DRIVE
FOREST, VIRGINIA 24551
PHONE: (434) 316-6001

CITY OF LYNCHBURG
BACKUP
GENERATOR REPLACEMENT

CLIENT PROJECT CODE:

LYNCHBURG, VIRGINIA

ADDITIVE BID ITEM NO. 1
PARTIAL PLAN SHOP BLDG
AND SHOP POWER
DISTRIBUTION DIAGRAM

DATE: DEC 13, 2013

PROJECT NO: 13104

Full Scale Verification

0" 1"

Drawing No.:

D4

ELECTRICAL LEGEND AND SYMBOLS

1 — CONSTRUCTION NOTE

1 — DEMOLITION NOTE

LIMIT OF DEMOLITION

NEW–TO–EXISTING POINT OF CONNECTION

POWER

(E) — EQUIPMENT CONNECTION

WP — DUPLEX RECEPTACLE, WALL MOUNTED 18" AFF, UON.
WP = WEATHERPROOF WITH GROUND FAULT CIRCUIT PROTECTION
AC = MOUNT 3" ABOVE COUNTER BACKSPLASH
GFI = GROUND FAULT PROTECTION

QUAD RECEPTACLE, MOUNT 18" AFF, UON.

SIMPLEX RECEPTACLE, MOUNT 18" AFF, UON.

SPECIAL PURPOSE RECEPTACLE, AS NOTED, WALL MOUNT 18" AFF, UON.

S_M — MANUAL MOTOR STARTER WITH THERMAL OVERLOADS, WALL-MOUNT 48" AFF UON.

480V, 3P, 100A / 70A, NEMA 1 — DISCONNECT — VOLTAGE, POLES, AMP RATING / FUSE SIZE, ENCLOSURE TYPE

480V, 3P, 0 / FVNR, 3R, CB — MOTOR STARTER — VOLTAGE, POLES, NEMA SIZE / TYPE, ENCLOSURE, DISCONNECT

400A / 300A — FUSED SWITCH — SWITCH SIZE / FUSE SIZE

400AF / 300AT — CIRCUIT BREAKER — AMP FRAME / AMP TRIP

N E — TRANSFER SWITCH

LP3
120/208
3P/4W
225A
MCB

PANELBOARD — PANELBOARD NUMBER, VOLTAGE, POLES, WIRES, AMP RATING

GROUND ROD

B — EXOTHERMIC BOND CONDUCTOR TO CONDUCTOR

CONDUCTORS AND RACEWAYS

CONDUIT RUN CONCEALED UNDER FLOOR

CONDUIT RUN EXPOSED OR ABOVE CEILING

(3)#12
IN 3/4"C — HOMERUN CIRCUIT TO OTHER CIRCUIT. CONDUCTORS AND RACEWAY, SIZE AS NOTED.

MDP-1 — HOMERUN TO PANEL AND CIRCUIT NUMBER AS INDICATED. CONDUCTOR AND RACEWAY SIZE AS INDICATED IN PANELBOARD SCHEDULE, UON.

MDP-1 — INDICATES MULTIPLE HOMERUN CIRCUITS FROM SINGLE PANEL /CIRCUIT.

JB — JUNCTION BOX

CONDUIT TURNING DOWN

CONDUIT TURNING UP

SPECIAL SYSTEMS

PUSHBUTTON STATION. MOUNT 48" AFF, UON.

ABBREVIATIONS

A	AMPERE
AC	ABOVE COUNTER
A/E	ARCHITECT/ENGINEER
AF	AMP FRAME
AT	AMP TRIP
AFF	ABOVE FINISHED FLOOR
APPROX	APPROXIMATE
C	CONDUIT
CB	CIRCUIT BREAKER
CRSI	CONCRETE REINFORCING STEEL INSTITUTE
DWG	DRAWING
(E)	EXISTING
EGC	EQUIPMENT GROUND CONDUCTOR
EMT	ELECTRICAL METALLIC TUBING
FD	FUSED DISCONNECT
FMC	FLEXIBLE METALLIC CONDUIT
FTL	FEED THROUGH LUGS
FVNR	FULL VOLTAGE NON REVERSING
G, GND	GROUND
GFI	GROUND FAULT INTERRUPTING
HOA	HAND-OFF-AUTO
HP	HORSEPOWER
HVAC	HEATING, VENTILATING, AND AIR CONDITIONING
JB	JUNCTION BOX
KVA	KILOVOLTAMPS
LFMC	LIQUID-TIGHT FLEXIBLE METALL CONDUIT
MAX	MAXIMUM
MC	METAL CLAD CABLE
MCA	MIN CIRCUIT AMPACITY
MCB	MAIN CIRCUIT BREAKER
MIN	MINIMUM
MLO	MAIN LUGS ONLY
MOPD	MAX OVERCURRENT PROTECTION DEVICE
N	NEUTRAL
NF	NON FUSED
NIC	NOT IN CONTRACT
OCPD	OVERCURRENT PROTECTION DEVICE
P	PHASES OR POLES
PB	PUSHBUTTON
RNC	RIGID NONMETALLIC CONDUIT
RSC	RIGID STEEL CONDUIT
STP	SHIELDED TWISTED PAIR
TVSS	TRANSIENT VOLTAGE SURGE SUPPRESSION
TYP	TYPICAL
UG	UNDERGROUND
UON	UNLESS OTHERWISE NOTED
UTP	UNSHIELDED TWISTED PAIR
V	VOLTS
VFD	VARIABLE FREQUENCY DRIVE
W	WIRES
W/	WITH
W/O	WITHOUT
WP	WEATHERPROOF
XFMR	TRANSFORMER

GENERAL NOTES:

1. THESE DRAWINGS ARE SCHEMATIC IN NATURE AND INDICATE THE GENERAL AND APPROXIMATE LOCATION OF EQUIPMENT AND EXISTING CONSTRUCTION. FIELD-VERIFY ALL DIMENSIONS AND LOCATIONS. INDICATED UNDERGROUND OBSTRUCTIONS WERE DEVELOPED FROM EXISTING RECORDS AND ABOVE GROUND INSPECTION. ACCURACY OR COMPLETENESS OF LOCATION AND DEPTH OF UNDERGROUND UTILITIES AND STRUCTURES CANNOT BE GUARANTEED. VERIFY LOCATION AND DEPTH OF ALL UNDERGROUND FACILITIES BEFORE STARTING WORK.
2. ALL ELECTRICAL WORK ON THIS PROJECT SHALL BE INSTALLED IN ACCORDANCE WITH THE 2009 VIRGINIA UNIFORM STATEWIDE BUILDING CODE, NFPA 70-2008 (NATIONAL ELECTRICAL CODE). AND REFERENCED CODES.
3. COORDINATE ARRANGEMENT, MOUNTING, AND SUPPORT OF ELECTRICAL EQUIPMENT TO AVOID INTERFERENCES WITH ELECTRICAL AND OTHER TRADES. COORDINATE WORK WITH EXISTING CONDITIONS INCLUDING BEAMS, COLUMNS, SITE FEATURES, AN OTHER CONSTRUCTION WHETHER OR NOT SUCH IS SHOWN ON THE DRAWINGS. SET SLEEVES IN CAST-IN-PLACE CONCRETE AND MASONRY WALLS, AS THEY ARE CONSTRUCTED. COORDINATE LOCATION OF ACCESS PANELS AND DOORS FOR ELECTRICAL EQUIPMENT THAT ARE BEHIND FINISHED SURFACES OR ARE OTHERWISE CONCEALED. COORDINATE AMPACITY VOLTAGE, PHASING, OVERCURRENT PROTECTION, LOCAL DISCONNECT REQUIREMENTS WITH ACTUAL EQUIPMENT PROVIDED.
4. CUT EXISTING CONSTRUCTION AS NEEDED FOR DEMOLITION AND CONSTRUCTION. USE CUTTING METHODS THAT MINIMIZE DAMAGE TO FINISHED AND ADJACENT SURFACES. PATCH EXISTING AND NEW CONSTRUCTION AND REPAIR ALL DAMAGED SURFACES TO MATCH EXISTING. PATCH UNUSED AND ABANDONED PENETRATIONS.

NO.	BY	REVISIONS	DATE
0	SFB	FOR CONSTRUCTION	13 DEC 13

COMMONWEALTH OF VIRGINIA
Scott Burger
SCOTT F. BURGER
Lic. No. 034338
12/13/2013
PROFESSIONAL ENGINEER

Virginia A&E
VIRGINIA A&E, PLLC
1115 VISTA PARK DRIVE
FOREST, VIRGINIA 24551
PHONE: (434) 316-6001

CITY OF LYNCHBURG
BACKUP
GENERATOR REPLACEMENT

CLIENT PROJECT CODE:
LYNCHBURG, VIRGINIA

LEGEND, ABBREVIATIONS, AND GENERAL NOTES

DATE: DEC 13, 2013

PROJECT NO: 13104

Full Scale Verification
0" 1"

Drawing No.:
E1

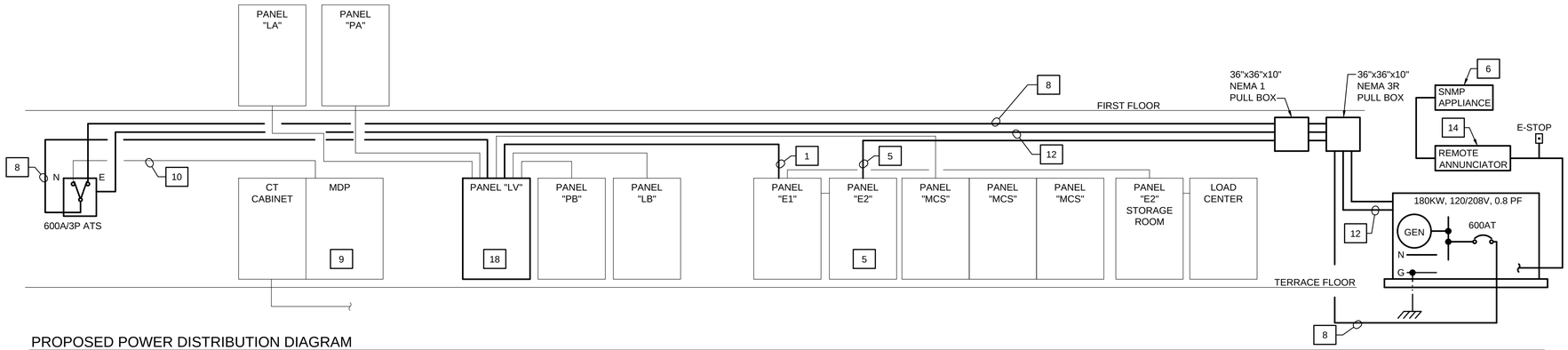

PROPOSED POWER DISTRIBUTION DIAGRAM

SCALE: NONE

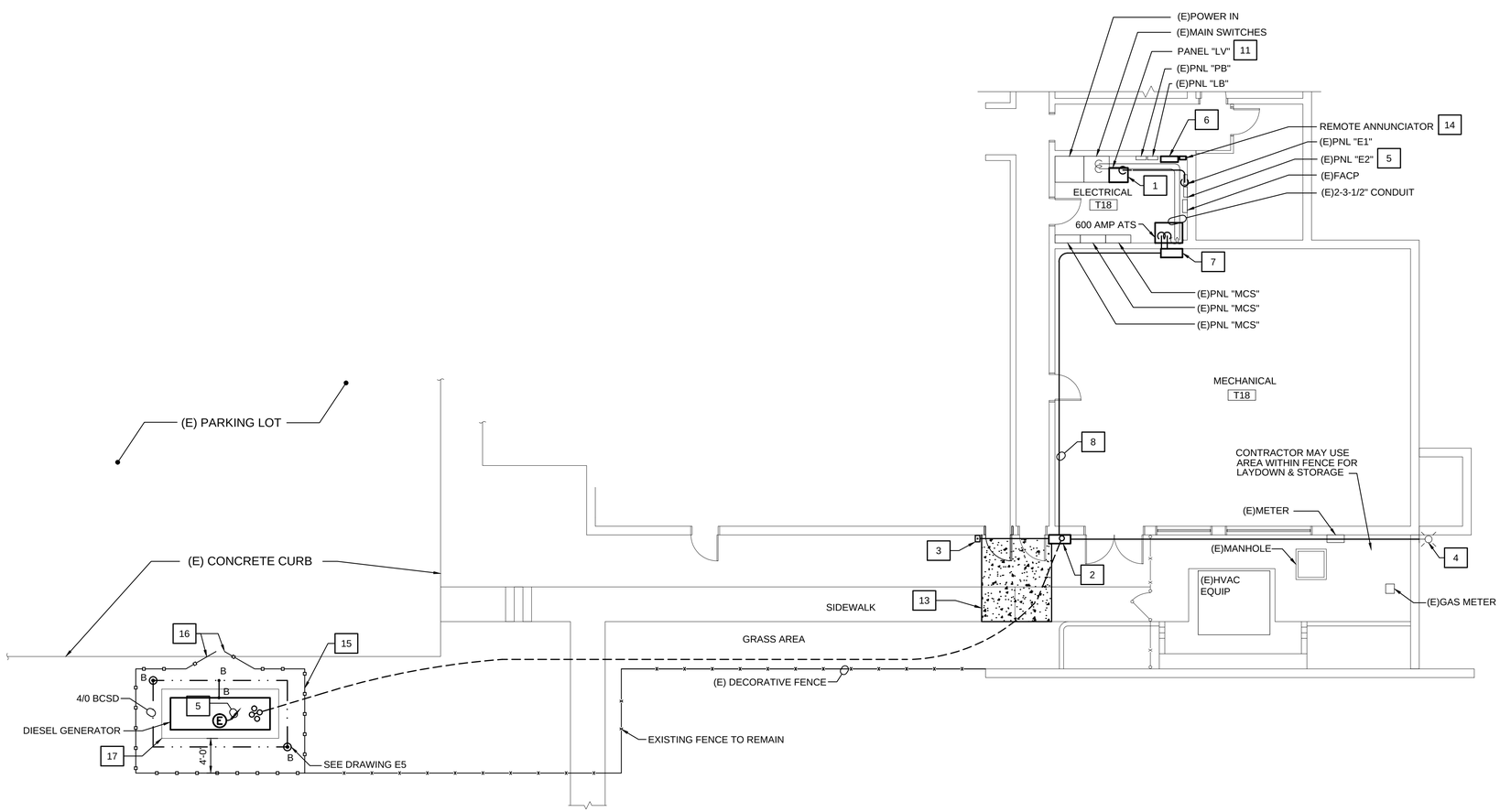

NORTH

PARTIAL TERRACE AND SITE PLAN

SCALE: 1/8"=1'-0"

0 5' 10' 15' 20'

XX CONSTRUCTION NOTES:

1. EXTEND (4)#3, (1)#8 GROUND, 1-1/4" CONDUIT TO (E)PANEL "E1".
2. PROVIDE 36"x36"x10" NEMA 3R PULL BOX.
3. MOUNT E-STOP PUSHBUTTON AT +48" AFG. EXTEND 3/4" CONDUIT TO GENERATOR.
4. EXTEND (E)WIRING FROM RETAINED ALARM TO GENERATOR.
5. PROVIDE (2)20A/1P BREAKERS IN (E)PANEL "E2". EXTEND (5)#10, 3/4" CONDUIT FOR BATTERY CHARGER AND BLOCK HEATER. (E)PANEL "E2" IS SQUARE D QOC30US.
6. PROVIDE SNMP INTERNET APPLIANCE WITHIN WALL-MOUNT RACK CABINET. ENCLOSURE TO INCLUDE TERMINAL STRIPS, INTERNET APPLIANCE, AS INDICATED ON DRAWING E6.
7. PROVIDE 36"x36"x10" NEMA 1 PULL BOX.
8. 2 SETS OF (4#400KCMIL, 1#1 EGC., 3"C).
9. (E)600A FUSED SWITCH WITH 600A FUSES SHALL BE UTILIZED TO FEED AUTOMATIC TRANSFER SWITCH.
10. RECONNECT (E)CONDUCTORS AND CONDUIT.
11. PROVIDE TOPHAT ABOVE PANEL "LV" WITH A DEPTH OF 20".
12. EXTEND CABLE IN 1" CONDUIT TO AUTOMATIC TRANSFER SWITCH FOR GENERATOR CONTROLS.
13. CONCRETE SIDEWALK SHALL BE 4" THICK. PLACE CONCRETE ON WELL COMPACTED SOIL. CONCRETE SHALL BE FIBER REINFORCED. EXPOSED EXTERIOR GRADE, AND MINIMUM STRENGTH 3500 PSI. CLEAN SURFACE, MATCH (E)GRADE. PROVIDE TOOLED JOINT WHERE NEW SIDEWALK ADJOINS EXISTING. BROOM FINISH SIDEWALK TO MATCH DIRECTION OF EXISTING.
14. CONNECT REMOTE ANNUNCIATOR TO GENERATOR FOLLOWING MANUFACTURER REQUIREMENTS.
15. PROVIDE ADDITIONAL DECORATIVE FENCING TO MATCH EXISTING CONSTRUCTION, MATERIALS, COLOR, AND DESIGN.
16. PROVIDE 2-4' WIDE HINGED GATES TO MATCH EXIST DECORATIVE FENCE. GATES SHALL BE CENTERED ON GENERATOR FOR MAINTENANCE ACCESS.
17. FINISH ELEVATION OF GENERATOR PAD SHALL MATCH ELEVATION OF ADJACENT PARKING LOT.
18. PROVIDE PANEL AS SCHEDULED.

NO.	BY	REVISIONS	DATE
0	SFB	FOR CONSTRUCTION	13 DEC 13

COMMONWEALTH OF VIRGINIA
Scott Burger
SCOTT F. BURGER
Lic. No. 034338
12/13/2013
PROFESSIONAL ENGINEER

Virginia A & E
VIRGINIA A&E, PLLC
1115 VISTA PARK DRIVE
FOREST, VIRGINIA 24551
PHONE: (434) 316-6001

CITY OF LYNCHBURG
BACKUP
GENERATOR REPLACEMENT

CLIENT PROJECT CODE:
LYNCHBURG, VIRGINIA

FIRE STATION #1
PARTIAL TERRACE
AND SITE PLAN,
PROPOSED POWER
DISTRIBUTION DIAGRAM

DATE: DEC 13, 2013

PROJECT NO: 13104

Full Scale Verification
0" 1"

Drawing No.:
E2

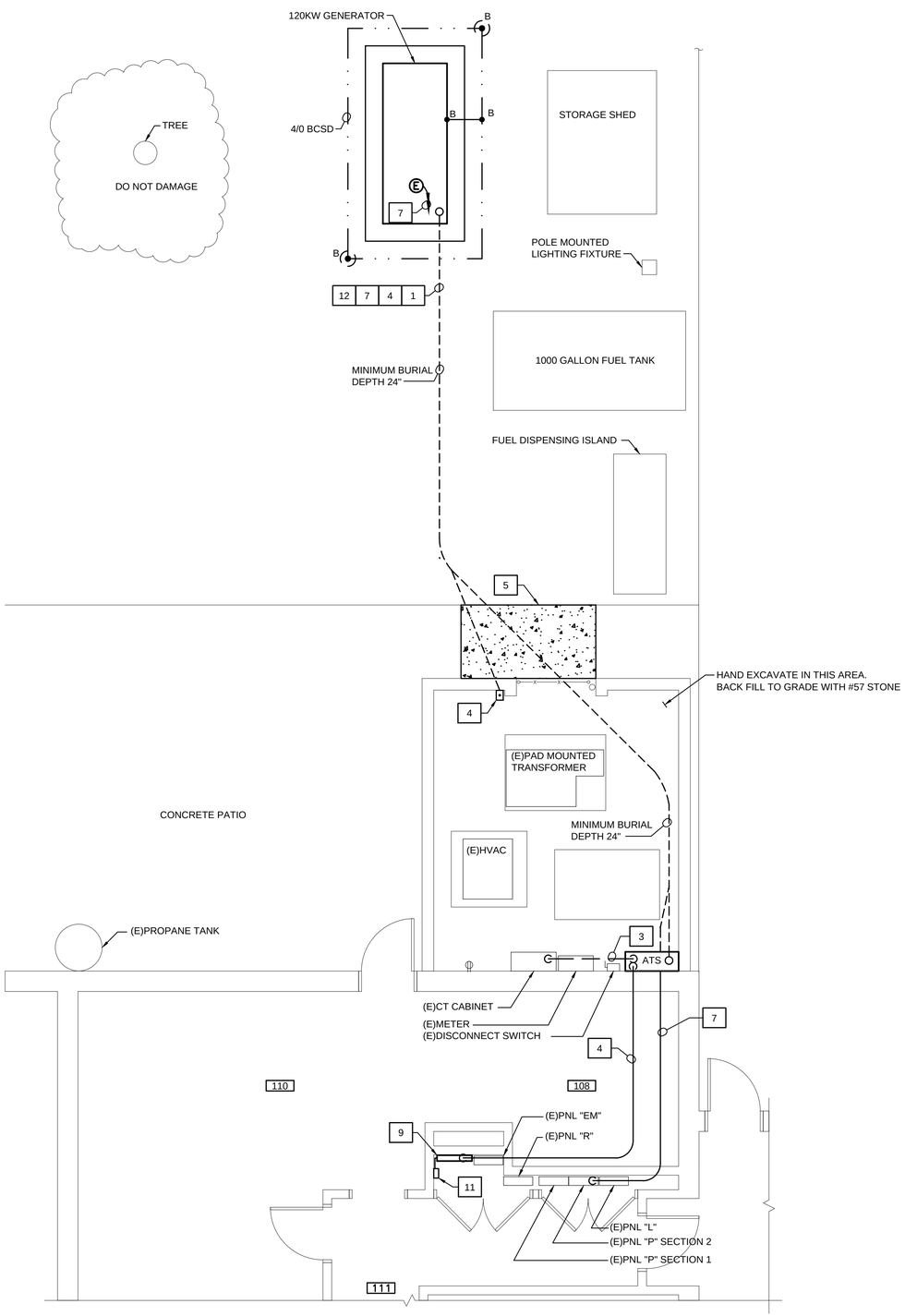

PARTIAL FLOOR AND SITE PLAN - CONSTRUCTION

SCALE: 1/4"=1'-0"

0 1' 5' 10'

XX CONSTRUCTION NOTES:

1. EXTEND 2 SETS OF (4#3/0, (1)#3 EGC., 2" C) TO AUTOMATIC TRANSFER SWITCH.
2. PROVIDE 100A/3P BREAKER IN (E)PANEL "P" SECTION 2. EXTEND (4)#3, (1)#8 GROUND IN 1-1/4" CONDUIT TO (E)PANEL "EM".
3. EXTEND 2 SETS OF (4#3/0, #3 EGC. IN 10"x10" NEMA 3R TROUGH.
4. MOUNT E-STOP PUSHBUTTON AT +48" AFF. EXTEND 3/4" CONDUIT TO GENERATOR.
5. CONCRETE SIDEWALK SHALL BE 4" THICK. PLACE CONCRETE ON WELL COMPACTED SOIL. CONCRETE SHALL BE FIBER REINFORCED, EXPOSED EXTERIOR GRADE, AND MINIMUM STRENGTH 3500 PSI. CLEAN SURFACE, MATCH (E)GRADE. PROVIDE TOOLED JOINT WHERE NEW SIDEWALK ADJOINS EXISTING. BROOM FINISH SIDEWALK TO MATCH DIRECTION OF EXISTING.
6. NOT USED.
7. PROVIDE (2)20A/1P BREAKERS IN (E)PANEL "P" SECTION 2. EXTEND (5)#10, 1" CONDUIT FOR BATTERY CHARGER AND BLOCK HEATER. (E)PANELBOARD IS WESTINGHOUSE POWERLINE 1.
8. NOT USED.
9. PROVIDE SNMP INTERNET APPLIANCE WITHIN 24"x24"x8" ENCLOSURE. ENCLOSURE TO INCLUDE TERMINAL STRIPS, INTERNET APPLIANCE AS INDICATED ON DRAWING E6.
10. NOT USED.
11. MOUNT ANNUNCIATOR +48"AFF. CONNECT TO GENERATOR FOLLOWING MANUFACTURER REQUIREMENTS FOR CONDUIT AND CABLE.
12. EXTEND CABLE IN 1" CONDUIT TO AUTOAMATIC TRANSFER SWITCH FOR GENERATOR START SIGNAL AND OTHER CONTROLS.

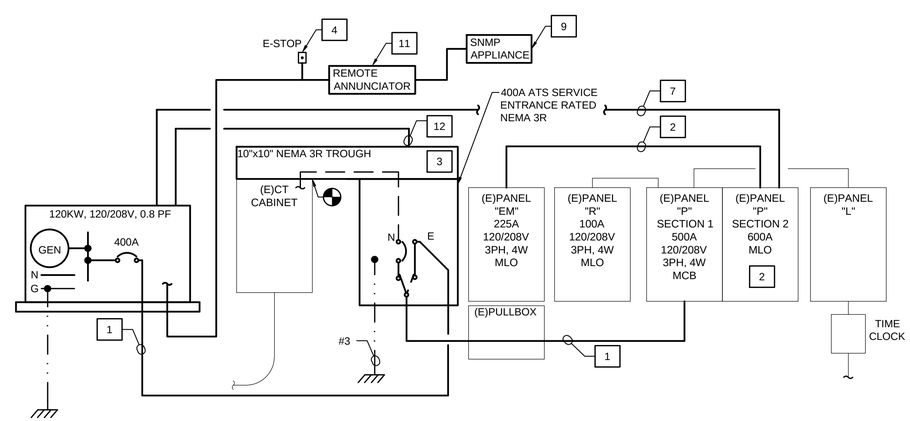

PROPOSED POWER DISTRIBUTION DIAGRAM

SCALE: NONE

NO.	BY	REVISIONS	DATE
0	SFB	FOR CONSTRUCTION	13 DEC 13

COMMONWEALTH OF VIRGINIA
Scott Burger
SCOTT F. BURGER
Lic. No. 034338
12/13/2013
PROFESSIONAL ENGINEER

Virginia A & E
VIRGINIA A&E, PLLC
1115 VISTA PARK DRIVE
FOREST, VIRGINIA 24551
PHONE: (434) 316-6001

CITY OF LYNCHBURG
BACKUP
GENERATOR REPLACEMENT

CLIENT PROJECT CODE:
LYNCHBURG, VIRGINIA

FIRE STATION #7
PARTIAL FLOOR AND SITE PLAN,
PROPOSED POWER
DISTRIBUTION DIAGRAM

DATE: DEC 13, 2013

PROJECT NO: 13104

Full Scale Verification
0" 1"

Drawing No.:

E3

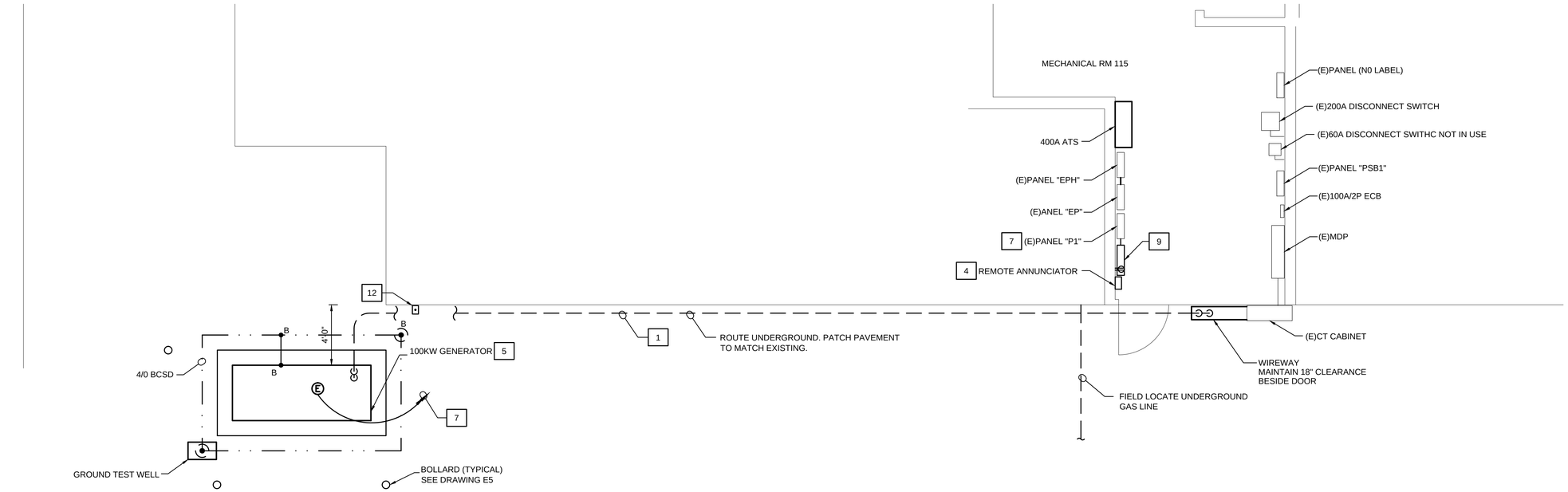

NORTH

PARTIAL FIRST FLOOR AND SITE PLAN

SCALE: 1/4"=1'-0"

0 1' 5' 10'

XX CONSTRUCTION NOTES:

1. EXTEND 2 SETS OF (4#3/0, 1#3 EGC., 2"C) TO AUTOMATIC TRANSFER SWITCH.
2. NOT USED.
3. NOT USED.
4. MOUNT REMOTE ANNUNCIATOR AT +48" AFF. EXTEND 1" CONDUIT TO GENERATOR.
5. PATCH ASPHALT TO MATCH EXISTING
6. NOT USED.
7. PROVIDE (2)20A/1P BREAKERS IN (E)PANEL "P1". EXTEND (5)#10, 1" CONDUIT FOR BATTERY CHARGER AND BLOCK HEATER. (E)PANEL "P1" IS SIEMENS S1C42ML250ATS.
8. EXTEND CABLE IN 1" CONDUIT TO AUTOMATIC TRANSFER SWITCH START SIGNAL.
9. PROVIDE SNMP INTERNET APPLIANCE WITHIN 24"x24"x8" ENCLOSURE. ENCLOSURE TO INCLUDE TERMINAL STRIPS, INTERNET APPLIANCE AS INDICATED ON DRAWING E6. PROVIDE 20A/1P BREAKER IN (E)PANEL "P1". EXTEND (3)#12, 3/4" CONDUIT.
10. PROVIDE 100A/3P CIRCUIT BREAKER TO FEED (E)PANEL "EP". (E)PANEL "EPH" IS SIEMENS S1C420J225ATS.
11. EXTEND (3)#1, (1)#1 NEUT, (1)#8 EGC., 2"C FROM 100A/3P BREAKER IN NOTE 10 TO MLO OF (E)PANEL "EP".
12. MOUNT NEMA 3R E-STOP PUSHBUTTON AT +48" AFG. EXTEND 3/4" CONDUIT TO GENERATOR.

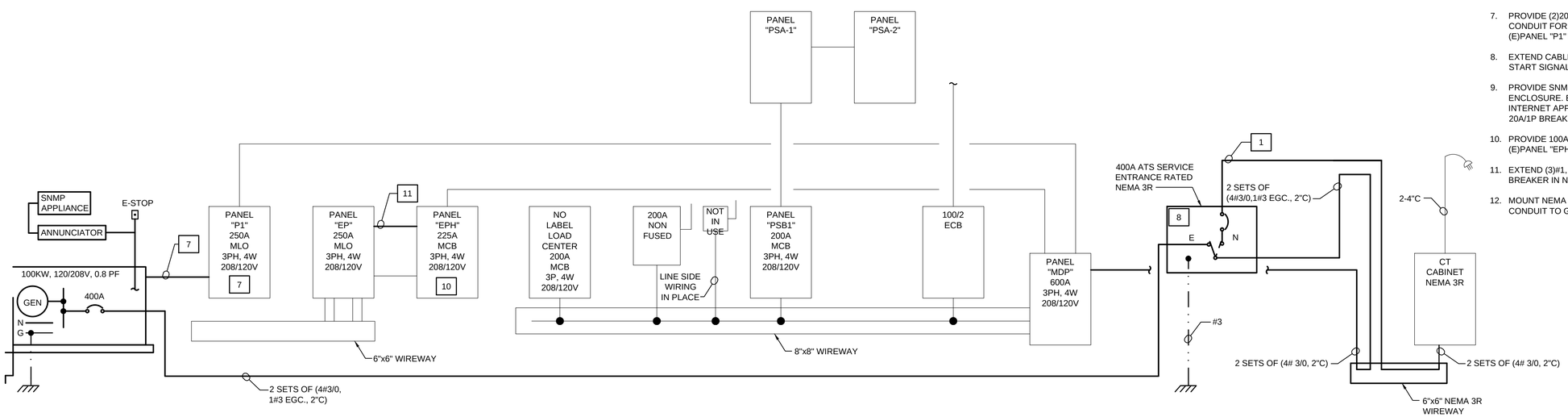

PROPOSED POWER DISTRIBUTION DIAGRAM

SCALE: NONE

NO.	BY	REVISIONS	DATE
0	SFB	FOR CONSTRUCTION	13 DEC 13

COMMONWEALTH OF VIRGINIA
Scott Burger
SCOTT F. BURGER
Lic. No. 034338
12/13/2013
PROFESSIONAL ENGINEER

Virginia A & E
VIRGINIA A&E, PLLC
1115 VISTA PARK DRIVE
FOREST, VIRGINIA 24551
PHONE: (434) 316-6001

CITY OF LYNCHBURG
BACKUP
GENERATOR REPLACEMENT

CLIENT PROJECT CODE:
LYNCHBURG, VIRGINIA

PUBLIC WORKS
ADMINISTRATION BUILDING
PARTIAL FIRST FLOOR AND SITE PLAN,
PROPOSED POWER DISTRIBUTION DIAGRAM

DATE: DEC 13, 2013

PROJECT NO: 13104

Full Scale Verification
0" 1"

Drawing No.:
E4

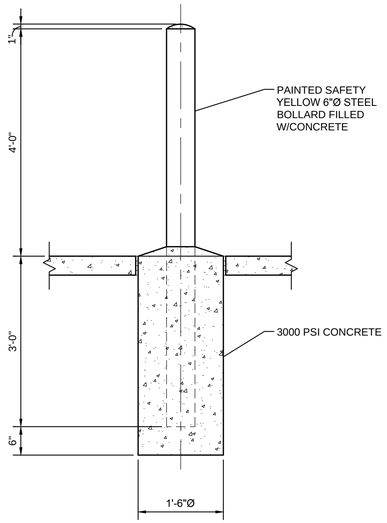

BOLLARD DETAIL
SCALE: NONE

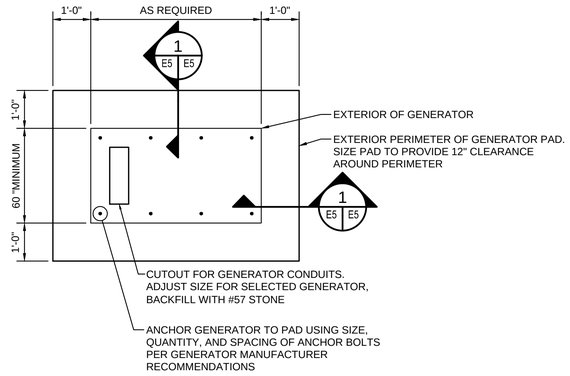

A E5 E5 GENERATOR PAD ENLARGED PLAN
SCALE: NONE

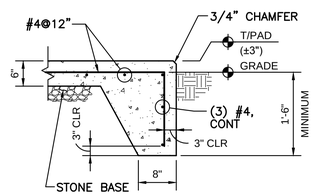

1 E5 E5 GENERATOR PAD SECTION
SCALE: NONE

CONCRETE AND REINFORCEMENT NOTES:

1. GENERATOR PAD SOIL BEARING CAPACITY SHALL BE A MINIMUM 1,500 PSF. CONTRACTOR SHALL ENGAGE INSPECTOR TO VERIFY SOIL BEARING CAPACITY AND REINFORCEMENT PLACEMENT PRIOR TO CONCRETE PLACEMENT. SUBMIT INSPECTION REPORT TO A/E FOR REVIEW.
2. CONCRETE SHALL BE NORMAL WEIGHT 145 PCF WITH A MINIMUM COMPRESSIVE STRENGTH OF 4,000 PSI AT 28 DAYS.
3. REINFORCING BARS SHALL BE ROLLED FROM NEW BILLET STEEL CONFORMING WITH ASTM A615/A615M, GRADE 60, UNLESS OTHERWISE NOTED.
4. THE FOLLOWING MINIMUM CONCRETE COVER SHALL BE PROVIDED FOR ALL REINFORCEMENT, UNLESS OTHERWISE NOTED:
   A. CONCRETE CAST AGAINST AND PERMANENTLY EXPOSED TO EARTH: 3"
   B. CONCRETE EXPOSED TO EARTH OR WEATHER: #5 BAR AND SMALLER: 1 1/2"
5. LAP ALL REINFORCING SPLICES AT LEAST 48 BAR DIAMETERS (24" MINIMUM) UNLESS OTHERWISE NOTED.
6. ALL REINFORCING SHALL BE SECURELY WIRED TOGETHER IN FORMS AS CALLED FOR IN "PLACING REINFORCING BARS" BY CRSI.
7. STONE BASE SHALL BE 4" THICK, #57 STONE.

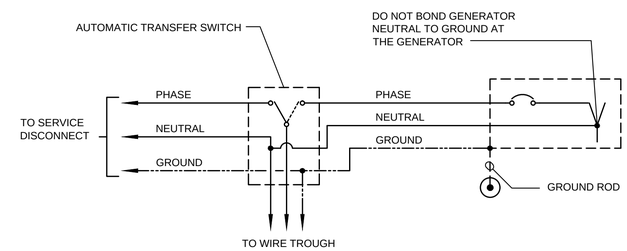

GENERATOR - NEUTRAL AND GROUND CONNECTION DIAGRAM
SCALE: NONE

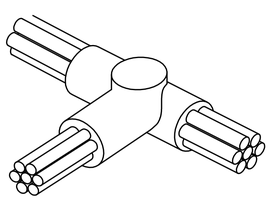

DETAIL - EXOTHERMIC CONNECTION WIRE TO WIRE
SCALE: NONE

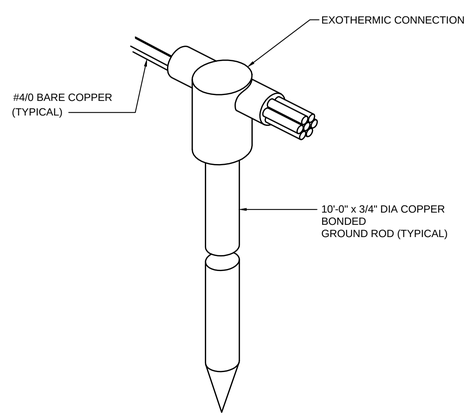

DETAIL - EXOTHERMIC CONNECTION WIRE TO GROUND ROD
SCALE: NONE

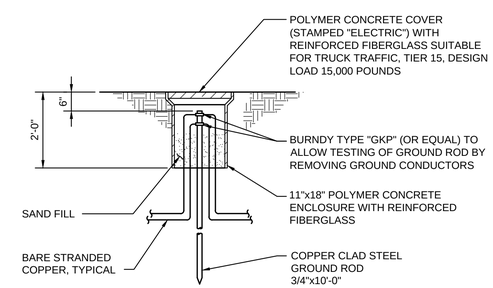

GROUND ROD TEST WELL - PUBLIC WORKS ADMINISTRATION BUILDING
SCALE: NONE

NO.	BY	REVISIONS	DATE
0	SFB	FOR CONSTRUCTION	13 DEC 13

COMMONWEALTH OF VIRGINIA
Scott Burger
SCOTT F. BURGER
Lic. No. 034338
12/13/2013
PROFESSIONAL ENGINEER

Virginia A&E
VIRGINIA A&E, PLLC
1115 VISTA PARK DRIVE
FOREST, VIRGINIA 24551
PHONE: (434) 316-6001

CITY OF LYNCHBURG
BACKUP
GENERATOR REPLACEMENT

CLIENT PROJECT CODE:
LYNCHBURG, VIRGINIA

DETAILS

DATE: DEC 13, 2013

PROJECT NO: 13104

Full Scale Verification
0" 1"

Drawing No.:
E5

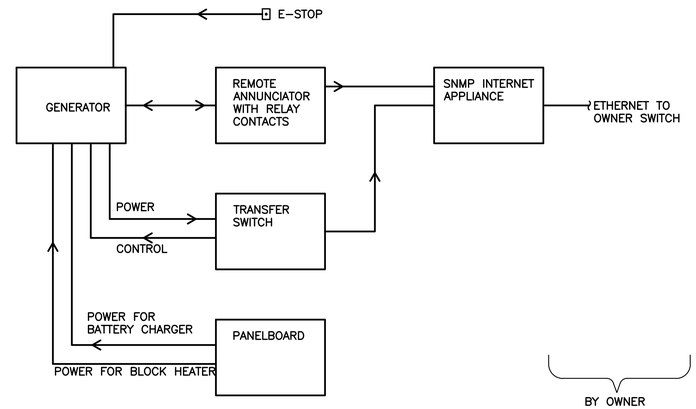

6 E8 E6 GENERATOR INTERCONNECTION
SCALE: NONE

INTERNET APPLIANCE SPECIFICATIONS:

1. PROVIDE SNMP INTERNET APPLIANCE WITHIN 24"x24"x8" ENCLOSURE. PROVIDE ONE PER GENERATOR. MOUNT ON WALL NEAR REMOTE GENERATOR ANNUNCIATOR AS INDICATED.
2. INTERNET SNMP APPLIANCE ENCLOSURE TO INCLUDE TERMINAL STRIPS AND INTERNET APPLIANCE.
3. PROVIDE INTERNET APPLIANCE. AVTECH ROOM ALERT RA32E-TH1-RAS.

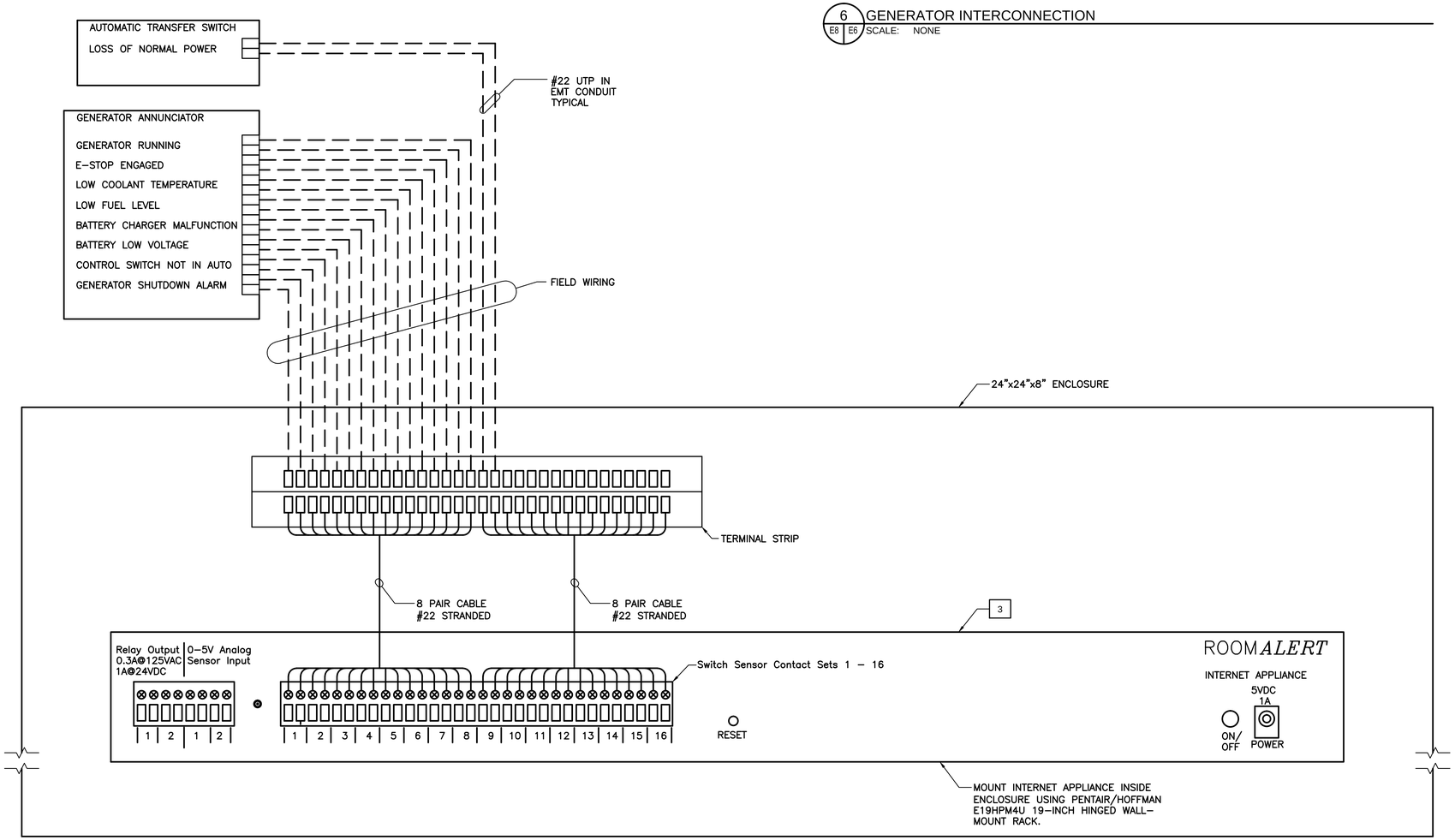

A E6 E6 INTERNET APPLIANCE ENCLOSURE ELEVATION AND INTERCONNECTION
SCALE: NONE

NO.	BY	REVISIONS	DATE
0	SFB	FOR CONSTRUCTION	13 DEC 13

COMMONWEALTH OF VIRGINIA
Scott Burger
SCOTT F. BURGER
Lic. No. 034338
12/13/2013
PROFESSIONAL ENGINEER

Virginia A & E
VIRGINIA A&E, PLLC
1115 VISTA PARK DRIVE
FOREST, VIRGINIA 24551
PHONE: (434) 316-6001

CITY OF LYNCHBURG
BACKUP
GENERATOR REPLACEMENT
CLIENT PROJECT CODE:
LYNCHBURG, VIRGINIA

INTERNET MONITORING

DATE: DEC 13, 2013
PROJECT NO: 13104

Full Scale Verification
0" 1"

Drawing No.:
E6

PANEL "LV" SCHEDULE - (I-LINE TYPE) - FIRE STATION #1

PANELBOARD CHARACTERISTICS:
VOLTS: 208/120
PHASES: 3
WIRES: 4
SOLID NEUTRAL, GROUND BAR

PHASE TO PHASE VOLTS: 208
PHASE TO NEUT. VOLTS: 120
800 AMP MAIN LUGS ONLY
MINIMUM SHORT CIRCUIT RATING: 42,000 RMS SYM AMPS
ENCLOSURE: SURFACE-NEMA 1, FLOOR MOUNTED
SERVICE ENTRANCE RATED: NO

POLE NO.	DESCRIPTION	LOAD TYPE	CONN. KVA	CONN. AMPS A	CONN. AMPS B	CONN. AMPS C	BREAKER P	BREAKER AT	NO. & WIRE SIZE PHASE	NO. & WIRE SIZE NEUT.	NO. & WIRE SIZE GND	COND SIZE	NOTES
1													
3	PANEL "LB"						3	225					1
5													
7													
9	PANEL "PB"						3	125					1
11													
13													
15	CHILLER						3	400					1
17													
19													
21	NO LABEL						3	100					1
23													
25													
27	PANEL 'E1"						3	50	#3	#3	#8	1 1/4"	
29													
31													
33	SPACE						3						
35													
2													
4	PANEL 'LA"						3	100					1
6													
8													
10	PANEL "PA"						3	125					1
12													
14													
16	MCS						3	400					1
18													
20													
22	RANGE						3	90					1
24													
26													
28	SPACE						3						
30													
32													
34	SPACE						3						
36													
	TOTALS												

NOTES:
1. EXISTING CONDUCTORS AND CONDUIT

NO.	BY	REVISIONS	DATE
0	SFB	FOR CONSTRUCTION	13 DEC 13

COMMONWEALTH OF VIRGINIA
Scott Burger
SCOTT F. BURGER
Lic. No. 034338
12/13/2013
PROFESSIONAL ENGINEER

Virginia A&E
VIRGINIA A&E, PLLC
1115 VISTA PARK DRIVE
FOREST, VIRGINIA 24551
PHONE: (434) 316-6001

CITY OF LYNCHBURG
BACKUP
GENERATOR REPLACEMENT
CLIENT PROJECT CODE:
LYNCHBURG, VIRGINIA

SCHEDULES

DATE: DEC 13, 2013
PROJECT NO: 13104

Full Scale Verification
0" 1"

Drawing No.:
E7

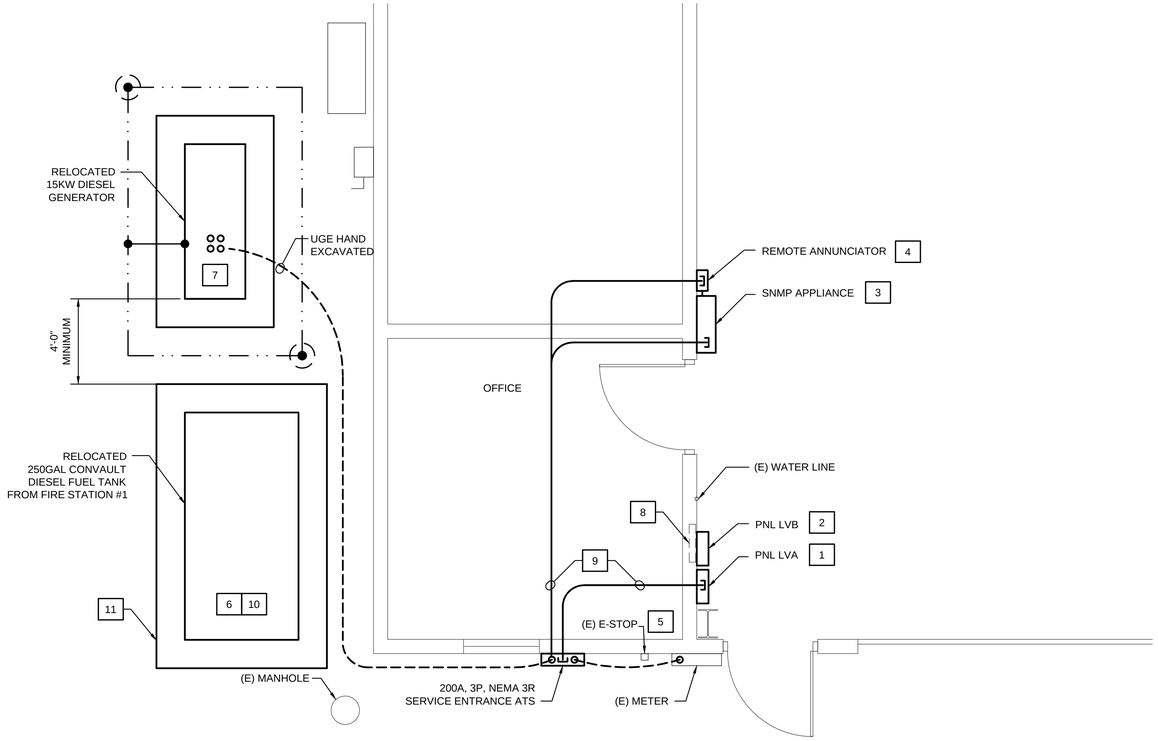

PARTIAL PLAN - STATION #7 - CONSTRUCTION

SCALE: 3/8"=1'-0"

0 6" 1' 2' 3' 4' 5'

XX CONSTRUCTION NOTES:

1. SEE SCHEDULE ON DWG E9.
2. SEE SCHEDULE ON DWG E9.
3. PROVIDE SNMP INTERNET APPLIANCE WITHIN WALL-MOUNT RACK CABINET. ENCLOSURE TO INCLUDE TERMINAL STRIPS, INTERNET APPLIANCE, AS INDICATED ON DRAWING E6.
4. CONNECT REMOTE ANNUNCIATOR TO GENERATOR FOLLOWING MANUFACTURER REQUIREMENTS.
5. PLACE NEW E-STOP AT SAME LOCATION AS OLD E-STOP.
6. FUEL TANK RELOCATED FROM FIRE STATION #1.
7. GENERATOR RELOCATED FROM FIRE STATION #1.
8. EXIST RECESSED PANEL SHALL BE REPLACED WITH SURFACE MOUNTED PANEL "LVA."
9. INSTALL POWER, CONTROL, AND ALARM CONDUITS ABOVE CEILING.
10. PROVIDE SUPPLY AND RETURN FUEL OIL PIPING FROM FUEL TANK TO GENERATOR TO MATCH EXISTING CONNECTIONS, FUEL OIL PIPING AND VALVES SHALL BE NEW. INSULATE FUEL PIPING WITH 1" STYROFOAM INSULATION WITH PVC JACKET.
11. PROVIDE 6" DEEP #57 STONE BASE FOR FUEL TANK. EXTEND BASE OUT 12" ALL AROUND TANK.

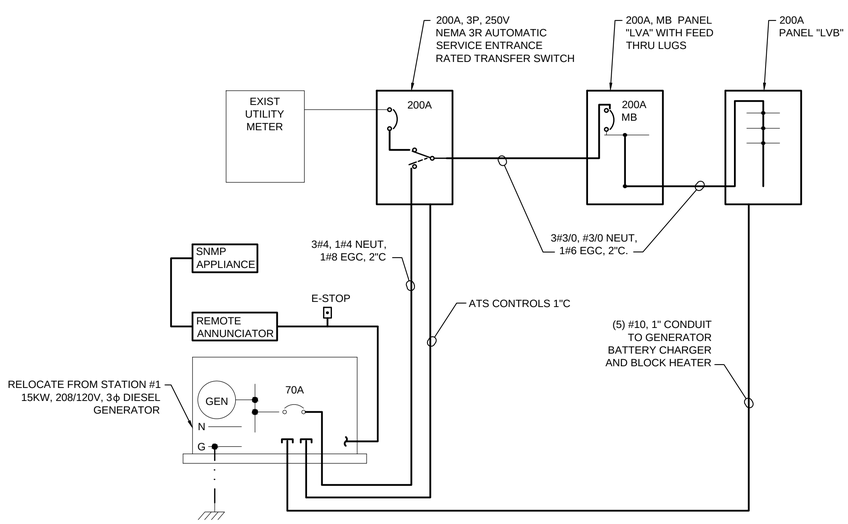

PROPOSED STATION #7 - SHOP POWER DISTRIBUTION DIAGRAM - CONSTRUCTION

SCALE: NONE

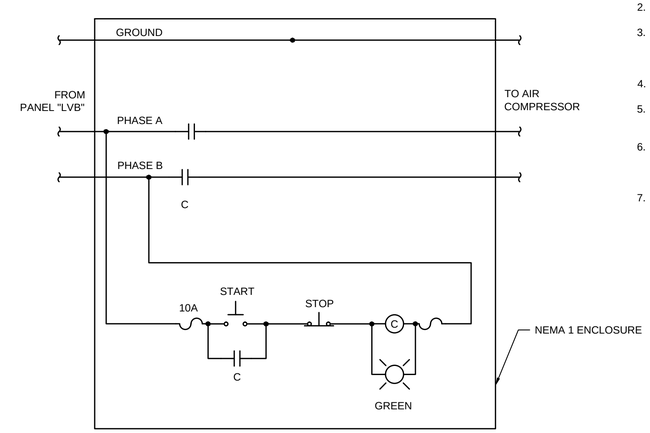

NOTES:

1. PROVIDE CONTACTOR AND CONTROL RELAYS WITHIN NEMA 1 BOX.
2. NEMA 1 BOX TO HAVE HINGED FRONT COVER.
3. START PUSHBUTTON, STOP PUSHBUTTON, AND GREEN INDICATOR LIGHT TO BE MOUNTED ON FRONT OF DOOR.
4. LOCATE CONTROLLER NEAR AIR COMPRESSOR.
5. INSERT CONTROLLER WITHIN BRANCH CIRCUIT SERVING AIR COMPRESSOR.
6. PURPOSE OF CONTROLLER IS TO PREVENT AUTO RESTART OF AIR COMPRESSOR WHILE BUILDING IS BEING SERVED BY GENERATOR.
7. CONTACTOR TO BE RATED 50A MINIMUM.

GENERATOR LOAD CONTROL CONTACTOR DIAGRAM

SCALE: NONE

NO.	BY	REVISIONS	DATE
0	SFB	FOR CONSTRUCTION	13 DEC 13

COMMONWEALTH OF VIRGINIA
Scott Burger
SCOTT F. BURGER
Lic. No. 034338
12/13/2013
PROFESSIONAL ENGINEER

Virginia A & E
VIRGINIA A&E, PLLC
1115 VISTA PARK DRIVE
FOREST, VIRGINIA 24551
PHONE: (434) 316-6001

CITY OF LYNCHBURG
BACKUP
GENERATOR REPLACEMENT

CLIENT PROJECT CODE:
LYNCHBURG, VIRGINIA

ADDITIVE BID ITEM NO. 1
FIRE STATION #7
SHOP BLDG PARTIAL PLAN
AND PROPOSED POWER
DISTRIBUTION DIAGRAM

DATE: DEC 13, 2013

PROJECT NO: 13104

Full Scale Verification
0" 1"

Drawing No.:
E8

PANEL "LVA" SCHEDULE

PANELBOARD CHARACTERISTICS:
VOLTS: 120/208
PHASES: 3
WIRES: 4
SOLID NEUTRAL, GROUND BAR

PHASE TO PHASE VOLTS: 208
PHASE TO NEUT. VOLTS: 120
200 AMP MAIN CIRCUIT BREAKER
MINIMUM SHORT CIRCUIT RATING: 14,000 RMS SYM AMPS
ENCLOSURE: SURFACE/NEMA 1
WITH FEED THRU LUGS

POLE NO.	DESCRIPTION	LOAD TYPE	CONN. KVA	CONN. AMPS A	CONN. AMPS B	CONN. AMPS C	BREAKER P	BREAKER AT	NO. & WIRE SIZE PHASE	NO. & WIRE SIZE NEUT.	NO. & WIRE SIZE GND	COND SIZE	NOTES
1	RCPT	R					1	20	*	*	*		
3	EWC						1	20	*	*	*		
5	WELDING RCPT						1	20	*	*	*		
7	WELDING RCPT						1	20	*	*	*		
9	RCPT						1	20	*	*	*		
11	RCPT						1	20	*	*	*		
13	RCPT-WELDING						2	20	*	*	*		
15	-						-		*	*	*		
17	OFFICE						1	20	*	*	*		
19	RCPT						1	20	*	*	*		
21	LIGHTS-OUTSIDE						1	20	*	*	*		
23	RCPT						1	20	*	*	*		
25	-						-		*	*	*		
27	WELDING RCPT						3		*	*	*		
29	-						-		*	*	*		
31	RCPT-OFFICE						1	20	*	*	*		
33	UNKNOWN						1	20	*	*	*		
35	LIGHTS						1	20	*	*	*		
37	-						-		*	*	*		
39	OIL PUMP						3	30	*	*	*		
41	-						-		*	*	*		
2	-						-		*	*	*		
4	SPARE						3	20	*	*	*		
6	-						-		*	*	*		
8	-						-		*	*	*		
10	RCPT-WELDING						3		*	*	*		
12	-						-		*	*	*		
14	HEAT						2	30	*	*	*		
16	-						-		*	*	*		
18	UNKNOWN						2	20	*	*	*		
20	-						-		*	*	*		
22	WELDING RCPT						2	20	*	*	*		
24	-						-		*	*	*		
26	OFFICE HEAT						2	20	*	*	*		
28	-						-		*	*	*		
30	HEAT						2	30	*	*	*		
32	-						-		*	*	*		
34	RCPT						1	20	*	*	*		
36	-						-		*	*	*		
38	CRANE						3		*	*	*		
40	-						-		*	*	*		
42													
	TOTALS												

NOTES
* RECONNECT EXISTING BRANCH CIRCUITS

PANEL "LVB" SCHEDULE

PANELBOARD CHARACTERISTICS:
VOLTS: 120/208
PHASES: 3
WIRES: 4
SOLID NEUTRAL, GROUND BAR

PHASE TO PHASE VOLTS: 208
PHASE TO NEUT. VOLTS: 120
200 AMP MAIN LUGS ONLY
MINIMUM SHORT CIRCUIT RATING: 14,000 RMS SYM AMPS
ENCLOSURE: SURFACE/NEMA 1

POLE NO.	DESCRIPTION	LOAD TYPE	CONN. KVA	CONN. AMPS A	CONN. AMPS B	CONN. AMPS C	BREAKER P	BREAKER AT	NO. & WIRE SIZE PHASE	NO. & WIRE SIZE NEUT.	NO. & WIRE SIZE GND	COND SIZE	NOTES
1	SHOP LIGHTS	L					1	20	*	*	*		
3	SHOP LIGHTS	L					1	20	*	*	*		
5	SHOP LIGHTS	L					1	20	*	*	*		
7	SHOP LIGHTS	L					1	20	*	*	*		
9	UNKNOWN						1	20	*	*	*		
11	OH DOORS	E					1	20	*	*	*		
13	OH DOORS	E					1	20	*	*	*		
15	OH DOORS	E					1	20	*	*	*		
17	LIGHTS	L					1	20	*	*	*		
19	LIGHTS	L					1	20	*	*	*		
21	SPARE						1	20					
23	SPARE						1	20					
25	SPARE						1	20					
27	SPARE						1	20					
29	SPARE						1	20					
31	SPARE						1	20					
33	SPARE						1	20					
35	SPARE						1	20					
37	SPARE						1	20					
39	SPARE						1	20					
41	SPARE						1	20					
2							-	-					
4	SPARE						3	20					
6							-	-					
8	GAS PUMP	E					1	20	*	*	*		
10	MEZZ PNL	E					2	60	*	*	*		
12							-	-	*	*	*		
14	AIR COMPRESSOR 7HP	E					2	50	*	*	*		
16							-	-	*	*	*		
18	UNKNOWN						1	20	*	*	*		
20	GENERATOR BLOCK HTR	E	2.0	9.6			2	20	10	-			
22					9.6		-		10				
24	GENERATOR BATTERY CHARGER	E					1	20	10	10	10	1"	
26	SPACE												
28	SPACE												
30	SPACE												
32	SPACE												
34	SPACE												
36	SPACE												
38	SPACE												
40	SPACE												
42	SPACE												
	TOTALS		2.0	9.6	9.6								

NOTES
* RECONNECT EXISTING BRANCH CIRCUITS

NO.	BY	REVISIONS	DATE
0	SFB	FOR CONSTRUCTION	13 DEC 13

COMMONWEALTH OF VIRGINIA
Scott Burger
SCOTT F. BURGER
Lic. No. 034338
12/13/2013
PROFESSIONAL ENGINEER

Virginia A & E
VIRGINIA A&E, PLLC
1115 VISTA PARK DRIVE
FOREST, VIRGINIA 24551
PHONE: (434) 316-6001

CITY OF LYNCHBURG
BACKUP
GENERATOR REPLACEMENT

CLIENT PROJECT CODE:
LYNCHBURG, VIRGINIA

ADDITIVE BID ITEM NO. 1
SCHEDULES

DATE: DEC 13, 2013
PROJECT NO: 13104

Full Scale Verification
0" 1"

Drawing No.:
E9