PROJECT MANAGER SHARON WHITE (VDOT)
SURVEYED BY GUFFEY WARNER & ASSOC. AND NXL, INC.
DESIGN SUPERVISED BY DONALD DeBERRY, P.E. (CITY OF LYNCHBURG) 434-455-3935
DESIGNED BY RICK J. DELONG (MCCORMICK TAYLOR, INC.)

STATE	FEDERAL AID PROJECT	STATE ROUTE	STATE PROJECT	SHEET NO.
VA.		163	(NFO) 0163-118-192 SEE TABULATIONS BELOW FOR SECTION NUMBERS	1

FHWA-534-3E021

City Project Number 11011-RWS

INDEX OF SHEETS:

SHEET NO.	
" " 1	TITLE SHEET
" " ~~2~~	~~PROJECT DATA SHEET~~ (NIC)
" " ~~2A(1) - 2A(3)~~	~~CONCEPTUAL MAINTENANCE OF TRAFFIC (MOT) PLAN~~ (NIC)
" " ~~3~~	~~TYPICAL SECTIONS & NOTES~~ (NIC)
" " ~~4~~	~~SIGNING & PAVEMENT MARKING PLAN~~ (NIC)
" " ~~5~~	~~ROADWAY PLAN~~ (NIC)
" " ~~5(A) - 5(B)~~	~~EROSION & SEDIMENT CONTROL PLAN~~ (NIC)
" " ~~6~~	~~LAKESIDE DR/PARK AVE PROFILE~~ (NIC)
" " ~~7~~	~~MEMORIAL AVE & ENTRANCE PROFILES~~ (NIC)
" " ~~8(A) - 8(F)~~	~~TRAFFIC SIGNAL PLANS~~ (NIC)
" " 9(A)-9(B)	WATER LINE RELOCATION PLANS
" " ~~10 - 14~~	~~CROSS SECTIONS~~ (NIC)

THIS PROJECT WAS DEVELOPED UTILIZING THE DEPARTMENT'S ENGINEERING DESIGN PACKAGE (GEOPAK).
GEOPAK Computer Identification No. 86544

COMMONWEALTH OF VIRGINIA

THE CITY OF LYNCHBURG

PLAN AND PROFILE OF PROPOSED ROADWAY IMPROVEMENTS

CITY OF LYNCHBURG
MEMORIAL AVENUE / LAKESIDE DRIVE / PARK AVENUE
INTERSECTION IMPROVEMENTS

FUNCTIONAL CLASSIFICATION AND TRAFFIC DATA	
URBAN PRINCIPAL ARTERIAL (GS-5)-ROLLING-30MPH DESIGN SPEED	
VA 163 (Memorial Avenue)	Fr: 0.02 Mi. S. Int. Memorial Ave./Lakeside Dr./Park Ave. To: 0.01 Mi. N. Int. Memorial Ave./Lakeside Dr./Park Ave.
ADT (2010)	13,000
ADT (2034)	18,600
DHV	1,700
D (%)	58%
T (%)	1%
V (MPH)	30

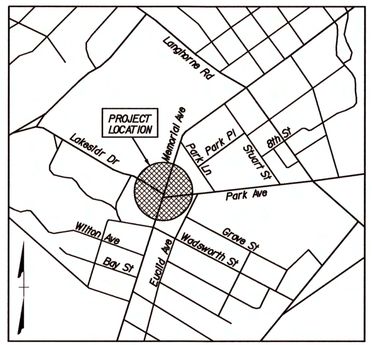

LOCATION MAP
NOT TO SCALE

THE COMPLETE ELECTRONIC .PDF VERSION OF THE PLAN ASSEMBLY AS AWARDED, INCLUDING ALL SUBSEQUENT REVISIONS, WILL BE THE OFFICIAL CONSTRUCTION PLANS.

DESIGN FEATURES RELATING TO CONSTRUCTION OR TO REGULATION AND CONTROL OF TRAFFIC MAY BE SUBJECT TO CHANGE AS DEEMED NECESSARY BY THE DEPARTMENT.

THIS PROJECT IS TO BE CONSTRUCTED IN ACCORDANCE WITH THE DEPARTMENT'S 2007 ROAD AND BRIDGE SPECIFICATIONS, 2008 ROAD AND BRIDGE STANDARDS, 2009 MUTCD, 2011 VIRGINIA SUPPLEMENT TO THE MUTCD, 2011 VIRGINIA WORK AREA PROTECTION MANUAL, THE CITY OF LYNCHBURG MANUAL OF SPECIFICATIONS AND STANDARD DETAILS, AND AS AMENDED BY CONTRACT PROVISIONS AND THE COMPLETE ELECTRONIC PDF VERSION OF THE PLAN ASSEMBLY.

ALL CURVES ARE TO BE SUPERELEVATED, TRANSITIONED AND WIDENED IN ACCORDANCE WITH STANDARD TC-5.04ULS, EXCEPT WHERE OTHERWISE NOTED.

NIC - NOT IN CONTRACT

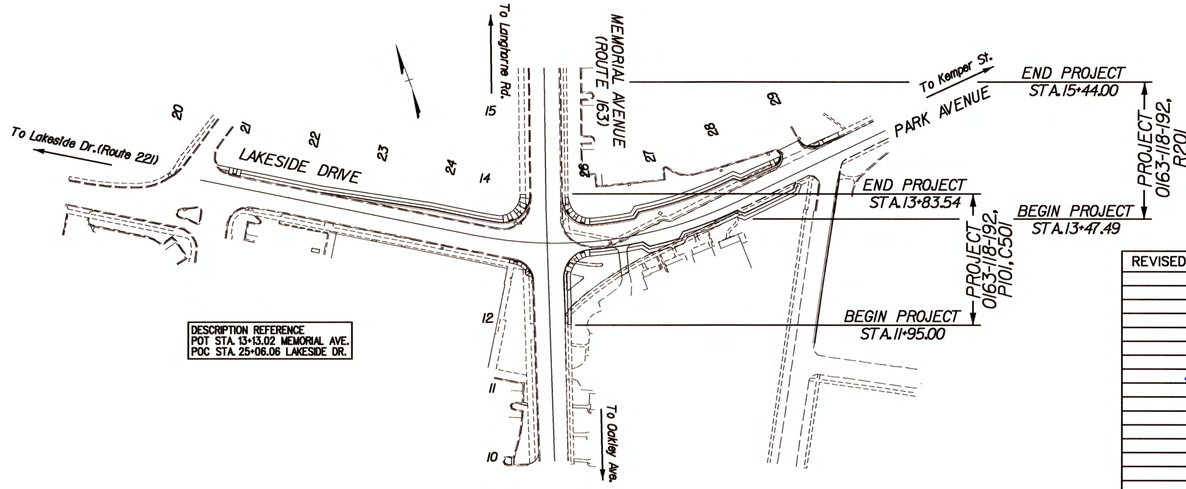

POPULATION 75,568 (2010 CENSUS)

CONVENTIONAL SIGNS

STATE LINE
COUNTY LINE
CITY,TOWN OR VILLAGE
RIGHT OF WAY LINE
FENCE LINE
UNFENCED PROPERTY LINE
FENCED PROPERTY LINE
WATER LINE
SANITARY SEWER LINE
GAS LINE
ELECTRIC UNDERGROUND CABLE
TRAVELED WAY
GUARD RAIL
RETAINING WALL
RAILROADS
BASE OR SURVEY LINE
LEVEE OR EMBANKMENT
BRIDGES
CULVERTS
DROP INLET
POWER POLES
TELEPHONE OR TELEGRAPH POLES
TELEPHONE OR TELEGRAPH LINES
HEDGE
TREES
HEAVY WOODS
GROUND ELEVATION
GRADE ELEVATION

STATE PROJECT NO.	SECTION	FEDERAL AID PROJECT NO.	TYPE CODE	PPMS NO.	LENGTH INCLUDING BRIDGE(S) FEET	LENGTH INCLUDING BRIDGE(S) MILES	LENGTH EXCLUDING BRIDGE(S) FEET	LENGTH EXCLUDING BRIDGE(S) MILES	TYPE PROJECT	DESCRIPTION
0163-118-192	P101	HSIP-5118(191)	PENG	86544	188.54	0.04	188.54	0.04	Prelim. Engr.	From: 0.02 Mi. S. Int. Memorial Ave./ Lakeside Dr./Park Ave. To: 0.01 Mi. N. Int. Memorial Ave./ Lakeside Dr./Park Ave.
	C501	HSIP-5118(212)	I000	86544	188.54	0.04	188.54	0.04	Construction	
	R201	HSIP-5118(228)	ROWA	86544	196.51	0.04	196.51	0.04	Right-of-Way	From: 0.01 Mi. N. Int. Memorial Ave./ Lakeside Dr./Park Ave. To: 0.04 Mi. N. Int. Memorial Ave./ Lakeside Dr./Park Ave.

NOTE: PROJECT LENGTH BASED ON LAKESIDE DRIVE/PARK AVE CONSTRUCTION BASELINE

COMMONWEALTH OF VIRGINIA
Rick James DeLong
Lic. No. 031642
05-27-14
PROFESSIONAL ENGINEER

McCormick Taylor, Inc.
Verona, Virginia
ROADWAY ENGINEER

TIER 1 PROJECT

LOCALLY ADMINISTERED PROJECTS

CITY OF LYNCHBURG

J. LEE NEWLAND, P.E.
RECOMMENDED FOR APPROVAL FOR RIGHT OF WAY ACQUISITION
9/22/14 — CITY ENGINEER
DATE — TITLE OF POSITION

J. LEE NEWLAND, P.E.
RECOMMENDED FOR APPROVAL FOR CONSTRUCTION
9/22/14 — CITY ENGINEER
DATE — TITLE OF POSITION

SCOTT PARKINS, P.E.
RECOMMENDED FOR APPROVAL FOR CONSTRUCTION
9/22/2014 — CITY UTILITIES ENGINEER
DATE — TITLE OF POSITION

22 Sept. 2014
J.P. MORRIS, P.E.
RECOMMENDED FOR APPROVAL FOR CONSTRUCTION
ENGINEERING PROJECT MANAGER
DATE — TITLE OF POSITION

REVISED

RECOMMENDED FOR APPROVAL FOR CONSTRUCTION
DATE — DISTRICT PLANNING AND INVESTMENT MANAGER
DATE — DISTRICT PROJECT DEVELOPMENT ENGINEER

APPROVED FOR CONSTRUCTION
DATE — DISTRICT ADMINISTRATOR

Copyright 2013, Commonwealth of Virginia

PROJECT MANAGER SHARON WHITE (VDOT)
SURVEYED BY GUFFEY WARNER & ASSOC. AND NXL, INC.
DESIGN SUPERVISED BY DONALD DeBERRY, P.E. (CITY OF LYNCHBURG) 434-455-3935
DESIGNED BY RICK J. DELONG (MCCORMICK TAYLOR, INC.)

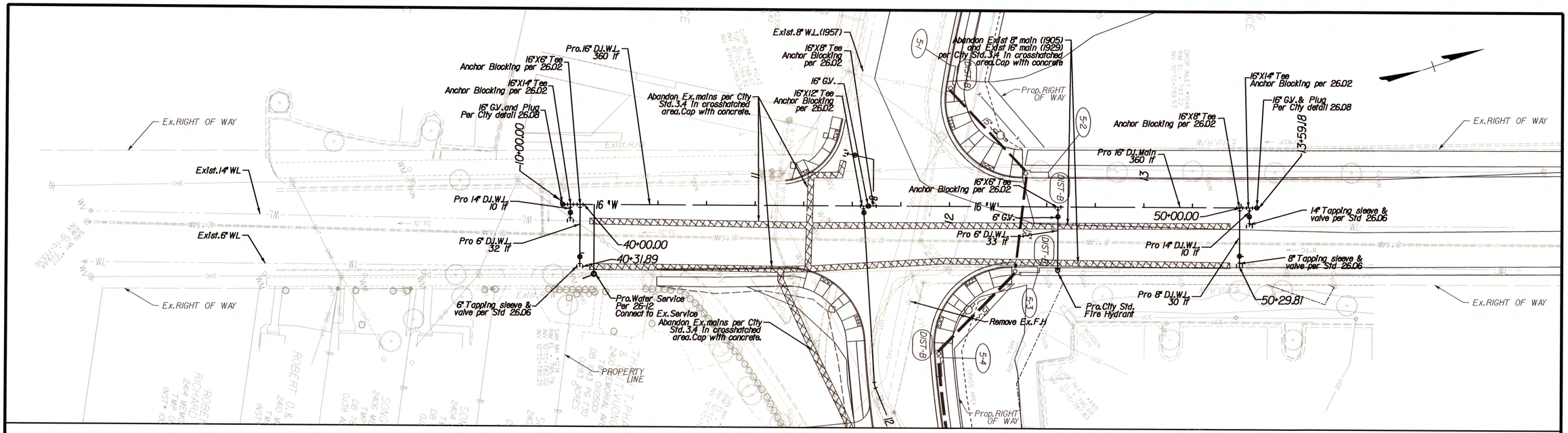

NOTES:

1) LOCATION & DEPTHS OF EXISTING WATER,GAS,AND OTHER UTILITY MAINS AS SHOWN ARE APPROXIMATE ONLY. CONTRACTOR TO VERIFY LOCATION & DEPTHS PRIOR TO CONSTRUCTION & CONTACT THE CITY ABOUT ANY CONFLICTS.

2) MAINTAIN 18" MIN.VERTICAL SEPARATION AT UTILITY CROSSINGS.

3) MAINTAIN 48" MINIMUM COVER ON PROPOSED WATER MAINS.

4) FOR ABANDONMENT OF THE PIPE, AFTER THE PIPE IS PHYSICALLY CUT AND SEPARATED,PUT 1 FOOT OF CONCRETE IN THE ABANDONED PIPE TO CAP IT.PROVIDE CAP ON PIPE REMAINING IN SERVICE AND PROVIDE THRUST BLOCK RESTRAINT.

5) ALL EXCAVATION FOR WATER LINES SHALL BE UNCLASSIFIED.UNCLASSIFIED SHALL INCLUDE ALL NATURAL OBSTRUCTIONS.

6) AT CLOSE OF PROJECT CONTRACTOR IS TO PROVIDE AS-BUILT SURVEY INCLUDING N/E COORDINATES ON ALL VALVES,HYDRANTS,METER BOXES. CITY DESIGN MANUAL HAS SPECIFICATION OF AS-BUILT DRAWING AND SURVEY REQUIREMENTS.

7) CONTRACTOR SHALL REMOVE EXISTING WATER METER BOXES AS PART OF RECONNECTION OF SERVICE.

8) CONTRACTOR SHALL CORRIDINATE WITH CITY STAFF THE REMOVAL OF EXISTING WATER METERS AND INSTALLATION OF NEW WATER METERS.

PROP.6" WATER MAIN CONNECTION (STA.40+00 - STA.40+13.89)

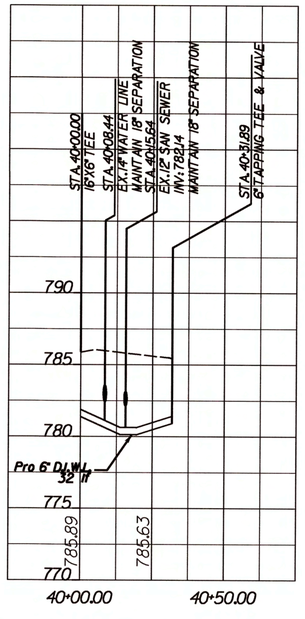

PROP.16" WATER MAIN (STA.10+00 - STA.13+59.18)

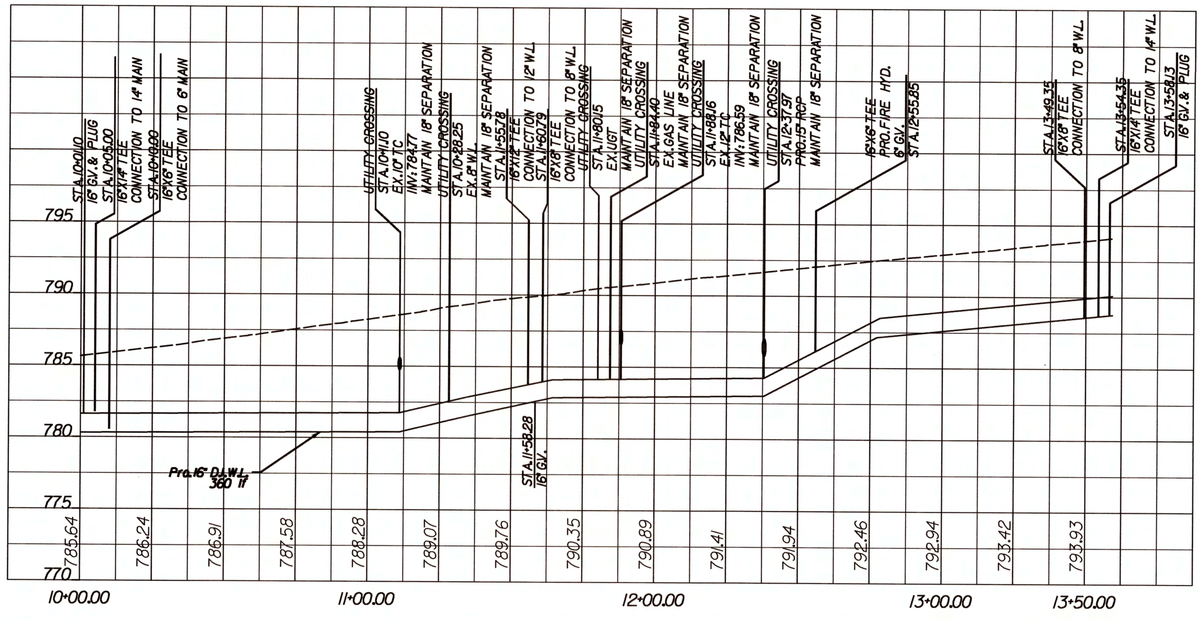

PROP.8" WATER MAIN CONNECTION (STA.50+00 - STA.50+29.81)

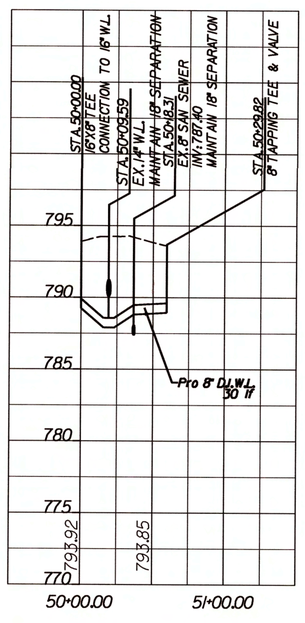

McCormick Taylor
Engineers & Planners
Since 1946

PREPARED BY:
McCORMICK TAYLOR
NORTH SHORE COMMONS A
4951 LAKE BROOK DRIVE, SUITE 275
GLEN ALLEN, VA 23060

PREPARED FOR:
CITY OF LYNCHBURG
DEPARTMENT OF PUBLIC WORKS
ENGINEERING DIVISION

COMMONWEALTH OF VIRGINIA
RICK JAMES DeLONG
Lic. No. 031642
05-27-14
PROFESSIONAL ENGINEER

NO.	REVISIONS	DATE	APPR.

MEMORIAL AVE/LAKESIDE DR/PARK AVE
INTERSECTION IMPROVEMENTS
VDOT PROJECT NO. 0163-118-192
FEDERAL PROJECT NO. HSIP-5118
CITY PROJECT NUMBER. 11011-R WS

SCALE
0 25' 50'

WATER LINE RELOCATION PLAN

DATE: MAY. 27, 2014

SHEET NO. 9(A) of 14

PROJECT MANAGER SHARON WHITE (VDOT)
SURVEYED BY GUFFEY WARNER & ASSOC. AND NXL, INC.
DESIGN SUPERVISED BY DONALD DeBERRY, P.E. (CITY OF LYNCHBURG) 434-455-3935
DESIGNED BY RICK J. DELONG (MCCORMICK TAYLOR, INC.)

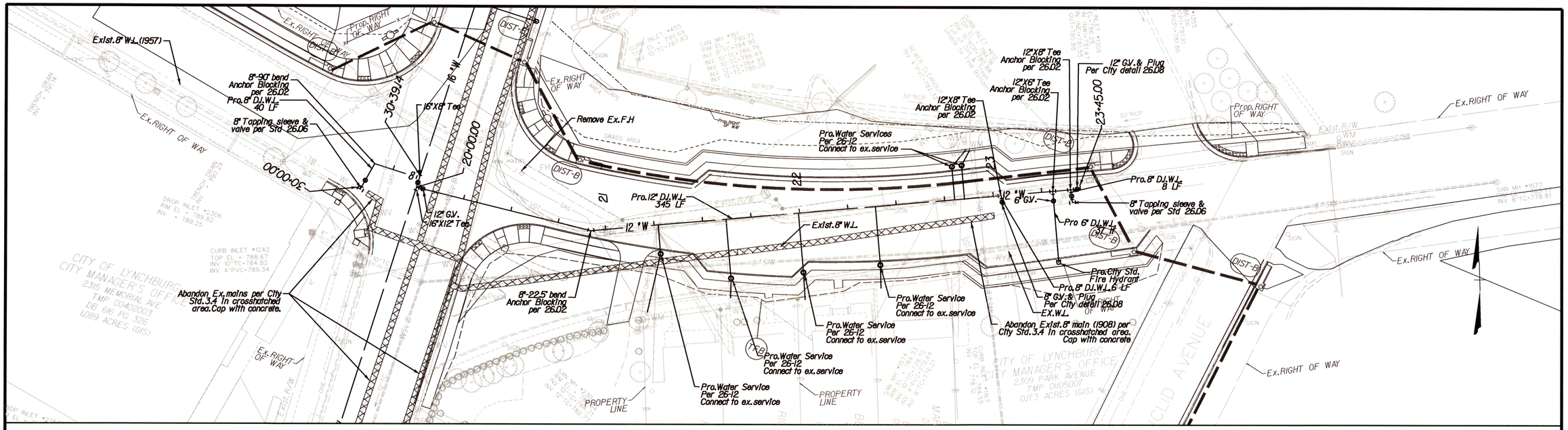

PROP.8" WATER MAIN RELOCATION (STA.30+00 - STA.30+39.14)

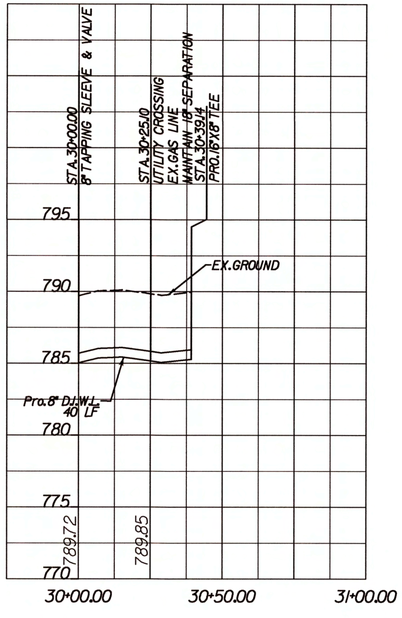

NOTES:

1) LOCATION & DEPTHS OF EXISTING WATER,GAS,AND OTHER UTILITY MAINS AS SHOWN ARE APPROXIMATE ONLY. CONTRACTOR TO VERIFY LOCATION & DEPTHS PRIOR TO CONSTRUCTION & CONTACT THE CITY ABOUT ANY CONFLICTS.

2) MAINTAIN 18" MIN.VERTICAL SEPARATION AT UTILITY CROSSINGS.

3) MAINTAIN 48" MINIMUM COVER ON PROPOSED WATER MAINS.

4) FOR ABANDONMENT OF THE PIPE, AFTER THE PIPE IS PHYSICALLY CUT AND SEPARATED,PUT 1 FOOT OF CONCRETE IN THE ABANDONED PIPE TO CAP IT.PROVIDE CAP ON PIPE REMAINING IN SERVICE AND PROVIDE THRUST BLOCK RESTRAINT.

5) ALL EXCAVATION FOR WATER LINES SHALL BE UNCLASSIFIED.UNCLASSIFIED SHALL INCLUDE ALL NATURAL OBSTRUCTIONS.

6) AT CLOSE OF PROJECT CONTRACTOR IS TO PROVIDE AS-BUILT SURVEY INCLUDING N/E COORDINATES ON ALL VALVES,HYDRANTS,METER BOXES. CITY DESIGN MANUAL HAS SPECIFICATION OF AS-BUILT DRAWING AND SURVEY REQUIREMENTS.

7) CONTRACTOR SHALL REMOVE EXISTING WATER METER BOXES AS PART OF RECONNECTION OF SERVICE.

8) CONTRACTOR SHALL CORRIDINATE WITH CITY STAFF THE REMOVAL OF EXISTING WATER METERS AND INSTALLATION OF NEW WATER METERS.

PROP.12" WATER MAIN RELOCATION (STA.20+00 - STA.23+45)

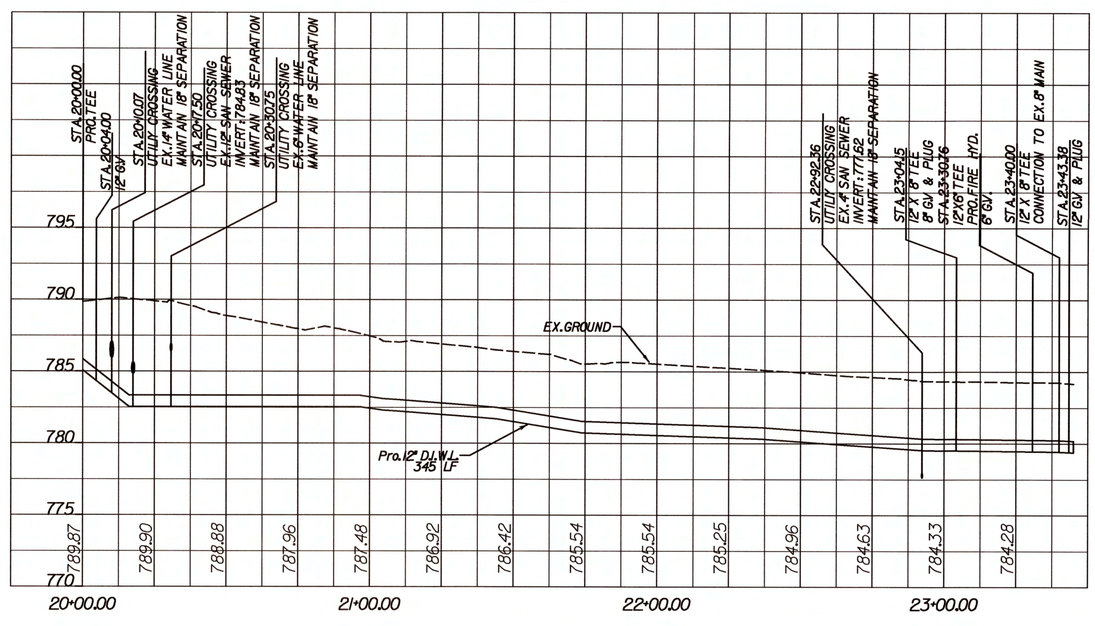

McCormick Taylor
Engineers & Planners Since 1946

PREPARED BY:
McCORMICK TAYLOR
NORTH SHORE COMMONS A
4951 LAKE BROOK DRIVE, SUITE 275
GLEN ALLEN, VA 23060

PREPARED FOR:
CITY OF LYNCHBURG
DEPARTMENT OF PUBLIC WORKS
ENGINEERING DIVISION

COMMONWEALTH OF VIRGINIA
RICHARD J. DeLONG
Lic. No. 031642
05-27-14
PROFESSIONAL ENGINEER

NO.	REVISIONS	DATE	APPR.

MEMORIAL AVE/LAKESIDE DR/PARK AVE INTERSECTION IMPROVEMENTS
VDOT PROJECT NO. 0163-118-192
FEDERAL PROJECT NO. HSIP-5118
CITY PROJECT NUMBER. 11011-R WS

SCALE 0 25' 50'

WATER LINE RELOCATION PLAN

DATE: MAY. 27, 2014

SHEET NO. 9(B) of 14