PROJECT MANUAL
FOR
CITY OF LYNCHBURG

May 21, 2013

Roof Replacement for

Task 2: Public Safety Building

905 Court Street Lynchburg, VA 24504

Lynchburg City Building Number CT303

PROCUREMENT DIVISION
3RD FLOOR CITY HALL
900 CHURCH STREET
LYNCHBURG, VA 24504
TELEPHONE (434) 455-3961
FAX (434) 845-0711

SECTION 00-0110

TABLE OF CONTENTS

PROCUREMENT AND CONTRACTING REQUIREMENTS

Division 00 -- Procurement and Contracting Requirements

00-0110 - Table of Contents

SPECIFICATIONS

Division 01 -- General Requirements

01-1000 - Summary

01-3000 - Administrative Requirements

01-4000 - Quality Requirements

01-5000 - Temporary Facilities and Controls

01-6000 - Product Requirements

01-7000 - Execution and Closeout Requirements

Division 05 -- Metals

05-5000 - Metal Fabrications

Division 06 -- Wood, Plastics, and Composites

06-1000 - Rough Carpentry

Division 07 -- Thermal and Moisture Protection

07-0150.19 - Preparation for Re-Roofing

07-5300 - Elastomeric Membrane Roofing

07-6200 - Sheet Metal Flashing and Trim

07-7200 - Roof Accessories

END OF TABLE OF CONTENTS

SECTION 01-1000

SUMMARY

PART 1 GENERAL

1.01 PROJECT

A. Project Name: Roof Replacement for Task 2: Public Safety Building.

B. City's Building No CT303.

C. Owner's Name: City of Lynchburg.
   1. Owner's Project Representitive: Scott Glass, AIA

D. Architect's Name: Craddock Cunningham Architectural Partners.
   1. Project Architect: Mark W. Smith

E. The Project consists of the removal and replacement of the EPDM roof memebrane, insulation and flashings. Stone ballast to be removed and new system shall be adhered.
   1. Roof area is approximately 7,850 square feet.
   2. Replacemet of gutter and downspouts.
   3. Reuse of the existing internal downspout drains or use of replacement drains (contractor's option).
   4. Removal and replacement of large mechanical units on the roof with the addition of new equipment curb required.

1.02 CONTRACT DESCRIPTION

A. Contract Type: A single prime contract based on a Stipulated Price as described in agreement.

1.03 OWNER OCCUPANCY

A. Owner intends to occupy the Project during roof replacement.

B. Cooperate with Owner to minimize conflict and to facilitate Owner's operations.

C. Schedule the Work to accommodate Owner occupancy.

1.04 EMERGENCY REPAIRS

A. Roof leaks that occur during construction will require emergency repair due to finished spaces located below this roof area. Contractor shall provide 24/7 type call service with response to site available in 4 hours of call.

1.05 CONTRACTOR USE OF SITE AND PREMISES

A. Construction Operations: Limited to roof area and unloading areas located at parking lot. 9th Street will need to remain available for Owner's operations and public access..

B. Arrange use of site and premises to allow:
   1. Owner occupancy.
   2. Use of site and premises by the public.

C. Existing building spaces may not be used for storage.

D. Parking: The contractor may obtain a Construction Parking Permit from the City of Lynchburg's for use of parking spaces at adjacent parking deck. Coordinate with City for use of private parking at the south end of site and the use of 9th Street for material handling. Storage of material will be on the roof or off-site.

PART 2 PRODUCTS - NOT USED

PART 3 EXECUTION - NOT USED

END OF SECTION

SECTION 01-3000

ADMINISTRATIVE REQUIREMENTS

PART 1 GENERAL

1.01 SECTION INCLUDES

A. Preconstruction meeting.

B. Submittals for review, information, and project closeout.

C. Submittal procedures.

1.02 RELATED REQUIREMENTS

A. Section 01-7000 - Execution and Closeout Requirements: Additional coordination requirements.

1.03 PROJECT COORDINATION

A. Project Coordinator: Scott Glass.

B. Cooperate with the Project Coordinator in allocation of mobilization areas of site for temporary storage, access, traffic, and parking facilities.

C. During construction, coordinate use of site and facilities through the Project Coordinator.

D. Comply with instructions of the Project Coordinator for use of temporary utilities and construction facilities.

E. The project coordinator may allow the general contractor to submit the following directly to the architect. This will be determined at the pre-construction meeting:
   1. Requests for interpretation.
   2. Requests for substitution.
   3. Shop drawings, product data, and samples.
   4. Test and inspection reports.
   5. Manufacturer's instructions and field reports.
   6. Applications for payment and change order requests.

PART 2 PRODUCTS - NOT USED

PART 3 EXECUTION

3.01 PRECONSTRUCTION MEETING

A. Owner will schedule a meeting after Notice of Award.

B. Attendance Required:
   1. Owner.
   2. Architect.
   3. Contractor.

C. Agenda:
   1. Designation of personnel representing the parties to Contract, Contractor and Architect.
   2. Procedures and processing of field decisions, submittals, substitutions, applications for payments, proposal request, Change Orders, and Contract closeout procedures.
   3. Use of premises by Owner and Contractor.
   4. Scheduling.
   5. Procedures for maintaining record documents.
   6. Security and housekeeping procedures.
   7. Temporary utilities provided by Owner.

D. Record minutes and distribute copies within two days after meeting to participants, with two copies to Architect, Owner, participants, and those affected by decisions made.

3.02 SUBMITTALS FOR REVIEW

A. When the following are specified in individual sections, submit them for review:
   1. Product data.
   2. Shop drawings.
   3. Samples for selection.
   4. Samples for verification.

B. Submit to Architect for review for the limited purpose of checking for conformance with information given and the design concept expressed in the contract documents.

C. Samples will be reviewed only for aesthetic, color, or finish selection.

3.03 SUBMITTALS FOR PROJECT CLOSEOUT

A. When the following are specified in individual sections, submit them at project closeout:
   1. Project record documents.
   2. Operation and maintenance data.
   3. Warranties.
   4. Bonds.
   5. Other types as indicated.

B. Submit for Owner's benefit during and after project completion.

3.04 SUBMITTAL PROCEDURES

A. Transmit each submittal with architect provided form.

B. Apply Contractor's stamp, signed or initialed certifying that review, approval, verification of Products required, field dimensions, adjacent construction Work, and coordination of information is in accordance with the requirements of the Work and Contract Documents.

C. Deliver submittals to Architect at business address.

D. For each submittal for review, allow 15 days excluding delivery time to and from the Contractor.

E. Identify variations from Contract Documents and Product or system limitations that may be detrimental to successful performance of the completed Work.

F. Provide space for Contractor and Architect review stamps.

G. When revised for resubmission, identify all changes made since previous submission.

H. Distribute reviewed submittals as appropriate. Instruct parties to promptly report any inability to comply with requirements.

I. Submittals not requested will not be recognized or processed.

END OF SECTION

SECTION 01-4000

QUALITY REQUIREMENTS

PART 1 GENERAL

1.01 SECTION INCLUDES

A. Control of installation.

B. Manufacturers' field services.

1.02 RELATED REQUIREMENTS

A. Section 01-3000 - Administrative Requirements: Submittal procedures.

1.03 SUBMITTALS

A. Manufacturer's Instructions: When specified in individual specification sections, submit printed instructions for delivery, storage, assembly, installation, adjusting, and finishing, for the Owner's information. Indicate special procedures, perimeter conditions requiring special attention, and special environmental criteria required for application or installation.

B. Manufacturer's Field Reports: Submit reports for Architect's benefit as contract administrator or for Owner.
   1. Submit for information for the limited purpose of assessing conformance with information given and the design concept expressed in the contract documents.

PART 2 PRODUCTS - NOT USED

PART 3 EXECUTION

3.01 CONTROL OF INSTALLATION

A. Monitor quality control over suppliers, manufacturers, products, services, site conditions, and workmanship, to produce Work of specified quality.

B. Comply with manufacturers' instructions, including each step in sequence.

C. Should manufacturers' instructions conflict with Contract Documents, request clarification from Architect before proceeding.

D. Comply with specified standards as minimum quality for the Work except where more stringent tolerances, codes, or specified requirements indicate higher standards or more precise workmanship.

E. Have Work performed by persons qualified to produce required and specified quality.

F. Verify that field measurements are as indicated on shop drawings or as instructed by the manufacturer.

G. Secure products in place with positive anchorage devices designed and sized to withstand stresses, vibration, physical distortion, and disfigurement.

3.02 MANUFACTURERS' FIELD SERVICES

A. When specified in individual specification sections, require material or product suppliers or manufacturers to provide qualified staff personnel to observe site conditions, conditions of surfaces and installation, quality of workmanship, as applicable, and to initiate instructions when necessary.

B. Report observations and site decisions or instructions given to applicators or installers that are supplemental or contrary to manufacturers' written instructions.

3.03 DEFECT ASSESSMENT

A. Replace Work or portions of the Work not conforming to specified requirements.

B. If, in the opinion of Architect, it is not practical to remove and replace the Work, Architect will direct an appropriate remedy or adjust payment.

END OF SECTION

SECTION 01-5000

TEMPORARY FACILITIES AND CONTROLS

PART 1 GENERAL

1.01 SECTION INCLUDES

A. Temporary utilities.

B. Temporary sanitary facilities.

C. Temporary Controls: Barriers and enclosures.

D. Security requirements.

E. Vehicular access and parking.

F. Waste removal facilities and services.

1.02 TEMPORARY UTILITIES

A. Owner will provide the following:
   1. Electrical power, consisting of connection to existing facilities.
   2. Water supply, consisting of connection to existing facilities.

B. Use trigger-operated nozzles for water hoses, to avoid waste of water.

1.03 TEMPORARY SANITARY FACILITIES

A. Provide and maintain required facilities and enclosures. Provide at time of project mobilization.

B. Maintain daily in clean and sanitary condition.

1.04 BARRIERS

A. Provide barriers to prevent unauthorized entry to construction areas, to prevent access to areas that could be hazardous to workers or the public, to allow for owner's use of site and to protect existing facilities and adjacent properties from damage from construction operations.

B. Provide barricades and covered walkways required by governing authorities for public rights-of-way and for public access to existing building.

C. Provide protection for plants designated to remain. Replace damaged plants.

D. Protect non-owned vehicular traffic, stored materials, site, and structures from damage.

E. Traffic Controls: Coordinate with City's traffic engineer.

1.05 EXTERIOR ENCLOSURES

A. Provide temporary roofing.

1.06 SECURITY

A. Provide security and facilities to protect Work, existing facilities, and Owner's operations from unauthorized entry, vandalism, or theft.

B. Coordinate with Owner's security program.

1.07 VEHICULAR ACCESS AND PARKING

A. Comply with regulations relating to use of streets and sidewalks, access to emergency facilities, and access for emergency vehicles.

B. Coordinate access and haul routes with governing authorities and Owner.

C. Provide and maintain access to fire hydrants, free of obstructions.

D. Existing parking areas located at public parking areas may be used for construction parking.

E. Additional Parking: The contractor may obtain a Construction Parking Permit from the City of Lynchburg's Inspections Department. This permit alls for street-side parking as required for construction operations.

1.08 WASTE REMOVAL

A. Provide daily removal of construction waste. No dumpster will be allowed on-site. Removal of roof materials will be direct closed type chute to truck and disposed of on a daily basis.

PART 2 PRODUCTS - NOT USED

PART 3 EXECUTION - NOT USED

END OF SECTION

SECTION 01-6000

PRODUCT REQUIREMENTS

PART 1 GENERAL

1.01 SECTION INCLUDES

A. Transportation, handling, storage and protection.

B. Product option requirements.

C. Substitution limitations and procedures.

1.02 SUBMITTALS

A. Product Data Submittals: Submit manufacturer's standard published data. Mark each copy to identify applicable products, models, options, and other data. Supplement manufacturers' standard data to provide information specific to this Project.

B. Shop Drawing Submittals: Prepared specifically for this Project; indicate utility and electrical characteristics, utility connection requirements, and location of utility outlets for service for functional equipment and appliances.

C. Sample Submittals: Illustrate functional and aesthetic characteristics of the product, with integral parts and attachment devices. Coordinate sample submittals for interfacing work.
   1. For selection from standard finishes, submit samples of the full range of the manufacturer's standard colors, textures, and patterns.

PART 2 PRODUCTS

2.01 EXISTING PRODUCTS

A. Do not use materials and equipment removed from existing premises unless specifically required or permitted by the Contract Documents.

B. Existing materials and equipment indicated to be removed, but not to be re-used, relocated, reinstalled, delivered to the Owner, or otherwise indicated as to remain the property of the Owner, become the property of the Contractor; remove from site.

2.02 NEW PRODUCTS

A. Provide new products unless specifically required or permitted by the Contract Documents.

2.03 PRODUCT OPTIONS

A. Products Specified by Reference Standards or by Description Only: Use any product meeting those standards or description.

B. Products Specified by Naming One or More Manufacturers: Use a product of one of the manufacturers named and meeting specifications, no options or substitutions allowed.

C. Products Specified by Naming One or More Manufacturers with a Provision for Substitutions: Submit a request for substitution for any manufacturer not named.

PART 3 EXECUTION

3.01 SUBSTITUTION PROCEDURES

A. Instructions to Bidders specify time restrictions for submitting requests for substitutions during the bidding period. Comply with requirements specified in this section.

B. Architect will consider requests for substitutions only within 15 days after date established in Notice to Proceed.

C. Substitutions may be considered when a product becomes unavailable through no fault of the Contractor.

D. Document each request with complete data substantiating compliance of proposed substitution with Contract Documents.

E. A request for substitution constitutes a representation that the submitter:
   1. Has investigated proposed product and determined that it meets or exceeds the quality level of the specified product.
   2. Will provide the same warranty for the substitution as for the specified product.
   3. Will coordinate installation and make changes to other Work that may be required for the Work to be complete with no additional cost to Owner.
   4. Waives claims for additional costs or time extension that may subsequently become apparent.

F. Substitution Submittal Procedure:
   1. Submit three copies of request for substitution for consideration. Limit each request to one proposed substitution.
   2. Submit shop drawings, product data, and certified test results attesting to the proposed product equivalence. Burden of proof is on proposer.
   3. The Architect will notify Contractor in writing of decision to accept or reject request.

3.02 TRANSPORTATION AND HANDLING

A. Coordinate schedule of product delivery to designated prepared areas in order to minimize site storage time and potential damage to stored materials.

B. Transport and handle products in accordance with manufacturer's instructions.

C. Transport materials in covered trucks to prevent contamination of product and littering of surrounding areas.

D. Promptly inspect shipments to ensure that products comply with requirements, quantities are correct, and products are undamaged.

E. Provide equipment and personnel to handle products by methods to prevent soiling, disfigurement, or damage.

F. Arrange for the return of packing materials, such as wood pallets, where economically feasible.

3.03 STORAGE AND PROTECTION

A. Designate receiving/storage areas for incoming products so that they are delivered according to installation schedule and placed convenient to work area in order to minimize waste due to excessive materials handling and misapplication.

B. Store and protect products in accordance with manufacturers' instructions.

C. Store with seals and labels intact and legible.

D. Store sensitive products in weather tight, climate controlled, enclosures in an environment favorable to product.

E. For exterior storage of fabricated products, place on sloped supports above ground.

F. Provide bonded off-site storage and protection when site does not permit on-site storage or protection.

G. Cover products subject to deterioration with impervious sheet covering. Provide ventilation to prevent condensation and degradation of products.

H. Prevent contact with material that may cause corrosion, discoloration, or staining.

I. Provide equipment and personnel to store products by methods to prevent soiling, disfigurement, or damage.

J. Arrange storage of products to permit access for inspection. Periodically inspect to verify products are undamaged and are maintained in acceptable condition.

END OF SECTION

SECTION 01-7000

EXECUTION AND CLOSEOUT REQUIREMENTS

PART 1 GENERAL

1.01 SECTION INCLUDES

A. Examination, preparation, and general installation procedures.

B. Requirements for alterations work, including selective demolition, except removal, disposal, and/or remediation of hazardous materials and toxic substances.

C. Pre-installation meetings.

D. Cutting and patching.

E. Cleaning and protection.

F. Closeout procedures, except payment procedures.

1.02 RELATED REQUIREMENTS

A. Section 01-1000 - Summary: Limitations on working in existing building; continued occupancy; work sequence; identification of salvaged and relocated materials.

B. Section 01-5000 - Temporary Facilities and Controls: Temporary exterior enclosures.

1.03 REFERENCE STANDARDS

A. NFPA 241 - Standard for Safeguarding Construction, Alteration, and Demolition Operations; 2009.

1.04 SUBMITTALS

A. See Section 01-3000 - Administrative Requirements, for submittal procedures.

B. Cutting and Patching: Submit written request in advance of cutting or alteration that affects:
1. Structural integrity of any element of Project.
2. Integrity of weather exposed or moisture resistant element.
3. Efficiency, maintenance, or safety of any operational element.
4. Visual qualities of sight exposed elements.

1.05 PROJECT CONDITIONS

A. Noise Control: Provide methods, means, and facilities to minimize noise produced by construction operations.

B. Pollution Control: Provide methods, means, and facilities to prevent contamination of soil, water, and atmosphere from discharge of noxious, toxic substances, and pollutants produced by construction operations. Comply with federal, state, and local regulations.

1.06 COORDINATION

A. Coordinate scheduling, submittals, and work of the various sections of the Project Manual to ensure efficient and orderly sequence of installation of interdependent construction elements.

B. Coordinate access to building for owner and visitors to keep facility accessible throughout construction period. Phasing of project will be required.

C. Coordinate completion and clean-up of work of separate sections.

PART 2 PRODUCTS

2.01 PATCHING MATERIALS

A. New Materials: As specified in product sections; match existing products and work for patching and extending work.

B. Type and Quality of Existing Products: Determine by inspecting and testing products where necessary, referring to existing work as a standard.

C. Product Substitution: For any proposed change in materials, submit request for substitution described in Section 01-6000.

PART 3 EXECUTION

3.01 EXAMINATION

A. Verify that existing site conditions and substrate surfaces are acceptable for subsequent work. Start of work means acceptance of existing conditions.

B. Verify that existing substrate is capable of structural support or attachment of new work being applied or attached.

C. Examine and verify specific conditions described in individual specification sections.

D. Take field measurements before confirming product orders or beginning fabrication, to minimize waste due to over-ordering or misfabrication.

E. Verify that utility services are available, of the correct characteristics, and in the correct locations.

F. Prior to Cutting: Examine existing conditions prior to commencing work, including elements subject to damage or movement during cutting and patching. After uncovering existing work, assess conditions affecting performance of work. Beginning of cutting or patching means acceptance of existing conditions.

3.02 PREPARATION

A. Clean substrate surfaces prior to applying next material or substance.

B. Seal cracks or openings of substrate prior to applying next material or substance.

C. Apply manufacturer required or recommended substrate primer, sealer, or conditioner prior to applying any new material or substance in contact or bond.

3.03 PREINSTALLATION MEETINGS

A. When required in individual specification sections, convene a preinstallation meeting at the site prior to commencing work of the section.

B. Require attendance of parties directly affecting, or affected by, work of the specific section.

C. Notify Architect four days in advance of meeting date.

D. Prepare agenda and preside at meeting:
   1. Review conditions of examination, preparation and installation procedures.
   2. Review coordination with related work.

E. Record minutes and distribute copies within two days after meeting to participants, with two copies to Architect, Owner, participants, and those affected by decisions made.

3.04 GENERAL INSTALLATION REQUIREMENTS

A. In addition to compliance with regulatory requirements, conduct construction operations in compliance with NFPA 241, including applicable recommendations in Appendix A.

B. Install products as specified in individual sections, in accordance with manufacturer's instructions and recommendations, and so as to avoid waste due to necessity for replacement.

C. Make vertical elements plumb and horizontal elements level, unless otherwise indicated.

D. Install equipment and fittings plumb and level, neatly aligned with adjacent vertical and horizontal lines, unless otherwise indicated.

E. Make consistent texture on surfaces, with seamless transitions, unless otherwise indicated.

F. Make neat transitions between different surfaces, maintaining texture and appearance.

3.05 ALTERATIONS

A. Drawings showing existing construction and utilities are based on casual field observation and existing record documents only.
   1. Verify that construction and utility arrangements are as shown.
   2. Report discrepancies to Architect before disturbing existing installation.

B. Maintain weatherproof exterior building enclosure except for interruptions required for replacement or modifications; take care to prevent water and humidity damage.
   1. Where openings in exterior enclosure exist, provide construction to make exterior enclosure weatherproof.

C. Remove existing work as indicated and as required to accomplish new work.
   1. Remove items indicated on drawings.
   2. Where new surface finishes are to be applied to existing work, perform removals, patch, and prepare existing surfaces as required to receive new finish; remove existing finish if necessary for successful application of new finish.
   3. Where new surface finishes are not specified or indicated, patch holes and damaged surfaces to match adjacent finished surfaces as closely as possible.

D. Protect existing work to remain.
   1. Prevent movement of structure; provide shoring and bracing if necessary.
   2. Perform cutting to accomplish removals neatly and as specified for cutting new work.
   3. Repair adjacent construction and finishes damaged during removal work.

E. Adapt existing work to fit new work: Make as neat and smooth transition as possible.

3.06 CUTTING AND PATCHING

A. Whenever possible, execute the work by methods that avoid cutting or patching.

B. See Alterations article above for additional requirements.

C. Perform whatever cutting and patching is necessary to:
   1. Complete the work.
   2. Fit products together to integrate with other work.
   3. Match work that has been cut to adjacent work.
   4. Repair areas adjacent to cuts to required condition.
   5. Repair new work damaged by subsequent work.
   6. Remove and replace defective and non-conforming work.

D. Execute work by methods that avoid damage to other work and that will provide appropriate surfaces to receive patching and finishing. In existing work, minimize damage and restore to specified condition.

E. Restore work with new products in accordance with requirements of Contract Documents.

F. Patching:
   1. Repair patched surfaces that are damaged, lifted, discolored, or showing other imperfections due to patching work. If defects are due to condition of substrate, repair substrate prior to repairing finish.

3.07 PROGRESS CLEANING

A. Maintain areas free of waste materials, debris, and rubbish. Maintain site in a clean and orderly condition.

3.08 PROTECTION OF INSTALLED WORK

A. Protect installed work from damage by construction operations.

B. Provide special protection where specified in individual specification sections.

C. Provide temporary and removable protection for installed products. Control activity in immediate work area to prevent damage.

3.09 FINAL CLEANING

A. Execute final cleaning prior to final project assessment.

B. Clean interior and exterior glass, surfaces exposed to view; remove temporary labels, stains and foreign substances, polish transparent and glossy surfaces,

C. Clean debris from roofs, gutters, downspouts, and drainage systems.

D. Clean site; sweep paved areas, rake clean landscaped surfaces.

E. Remove waste, surplus materials, trash/rubbish, and construction facilities from the site; dispose of in legal manner; do not burn or bury.

3.10 CLOSEOUT PROCEDURES

A. Notify Architect when work is considered ready for Substantial Completion.

B. Correct items of work listed in executed Certificates of Substantial Completion and comply with requirements for access to Owner-occupied areas.

C. Accompany Project Coordinator on preliminary final inspection.

D. Notify Architect when work is considered finally complete.

E. Complete items of work determined by Architect's final inspection.

END OF SECTION

SECTION 06-1000

ROUGH CARPENTRY

PART 1 GENERAL

1.01 SECTION INCLUDES

A. Roof-mounted curbs.

B. Preservative treated wood materials.

C. Concealed wood blocking, nailers, and supports.

PART 2 PRODUCTS

2.01 GENERAL REQUIREMENTS

A. Dimension Lumber: Comply with PS 20 and requirements of specified grading agencies.
   1. Species: Southern Pine, unless otherwise indicated.

2.02 DIMENSION LUMBER FOR CONCEALED APPLICATIONS

A. Sizes: Nominal sizes as indicated on drawings, S4S.

B. Moisture Content: S-dry or MC19.

C. Miscellaneous Framing, Blocking, Nailers, Grounds, and Furring:
   1. Lumber: S4S, No. 2 or Standard Grade.

2.03 ACCESSORIES

A. Fasteners and Anchors:
   1. Metal and Finish: Hot-dipped galvanized steel per ASTM A 153/A 153M for high humidity and preservative-treated wood locations, unfinished steel elsewhere.

2.04 FACTORY WOOD TREATMENT

A. Treated Lumber and Plywood: Comply with requirements of AWPA U1 - Use Category System for wood treatments determined by use categories, expected service conditions, and specific applications.
   1. Preservative-Treated Wood: Provide lumber and plywood marked or stamped by an ALSC-accredited testing agency, certifying level and type of treatment in accordance with AWPA standards.

B. Preservative Treatment:
   1. Preservative Pressure Treatment of Lumber Above Grade: AWPA U1, Use Category UC3B, Commodity Specification A using waterborne preservative to 0.25 lb/cu ft retention.
      a. Kiln dry lumber after treatment to maximum moisture content of 19 percent.
      b. Treat lumber exposed to weather.
      c. Treat lumber in contact with roofing, flashing, or waterproofing.
   2. Preservative Pressure Treatment of Plywood Above Grade: AWPA U1, Use Category UC2 and UC3B, Commodity Specification F using waterborne preservative to 0.25 lb/cu ft retention.
      a. Kiln dry plywood after treatment to maximum moisture content of 19 percent.
      b. Treat plywood in contact with roofing, flashing, or waterproofing.

PART 3 EXECUTION

3.01 ROOF-RELATED CARPENTRY

A. Install wood blocking and curbs as required for new roofing and flashings.

B. Set wood blocking at height above roof insulation for termination of roof to be 8 inch minimum from horizontal plane.

C. Attach wood with adequate fasteners to prevent warp and displacement of blocking.

END OF SECTION

SECTION 07-0150.19

PREPARATION FOR RE-ROOFING

PART 1 GENERAL

1.01 SECTION INCLUDES

A. Removal of existing roofing system in preparation for a new roof membrane system.

1.02 ADMINISTRATIVE REQUIREMENTS

A. Coordinate with affected mechanical and electrical work associated with roof penetrations.

B. Preinstallation Meeting: Convene one week before starting work of this section.

C. Schedule work to coincide with commencement of installation of new roofing system.

1.03 FIELD CONDITIONS

A. Do not remove existing roofing membrane when weather conditions threaten the integrity of the building contents or intended continued occupancy.

B. Maintain continuous temporary protection prior to and during installation of new roofing system.

PART 2 PRODUCTS

2.01 MATERIALS

A. Materials as deemed neccessary by contractor for protection and weather-tightness of interior spaces.

PART 3 EXECUTION

3.01 MATERIAL REMOVAL

A. Remove only existing roofing materials that can be replaced with new materials as the weather will permit.

B. Remove metal counter flashings.

C. Remove insulation and fasteners, nailer strips, blocking, and ballast and equipment as indicated.

3.02 FIELD QUALITY CONTROL

A. The drawings identify the approximate limits to material removal.

END OF SECTION

SECTION 07-5300

ELASTOMERIC MEMBRANE ROOFING

PART 1 GENERAL

1.01 SECTION INCLUDES

A. Elastomeric roofing membrane, adhered conventional application.

B. Insulation, flat and tapered.

C. Flashings.

D. Roofing stack boots and walkway pads.

E. Reuse/repair or replacement type roof drains

1.02 RELATED REQUIREMENTS

A. Section 06-1000 - Rough Carpentry: Wood nailers and curbs.

B. Section 07-0150.19 - Preparation for Re-Roofing.

C. Section 07-6200 - Sheet Metal Flashing and Trim: Counterflashings, reglets, and copings.

1.03 ADMINISTRATIVE REQUIREMENTS

A. Preinstallation Meeting: Convene a preinstallation meeting one week before starting work of this section; require attendance by all affected installers; review preparation and installation procedures and coordination and scheduling necessary for related work.

1.04 SUBMITTALS

A. See Section 01-3000 - Administrative Requirements, for submittal procedures.

B. Product Data: Provide data indicating membrane materials, flashing materials, insulation, fasteners, and walkway pads.

C. Manufacturer's Installation Instructions: Indicate membrane seaming precautions and perimeter conditions requiring special attention.

D. Warranty: Submit manufacturer warranty and ensure forms have been completed in Owner's name and registered with manufacturer.

1.05 QUALITY ASSURANCE

A. Perform work in accordance with NRCA Roofing and Waterproofing Manual and manufacturer's instructions.

B. Manufacturer Qualifications: Company specializing in manufacturing the products specified in this section with minimum 10 years of documented experience.

C. Applicator Qualifications: Company specializing in performing the work of this section with minimum 10 years experience and approved by manufacturer.

1.06 DELIVERY, STORAGE, AND HANDLING

A. Deliver products in manufacturer's original containers, dry, undamaged, with seals and labels intact.

B. Store products in weather protected environment, clear of ground and moisture.

C. Protect foam insulation from direct exposure to sunlight.

1.07 FIELD CONDITIONS

A. Do not apply roofing membrane during unsuitable weather.

B. Do not apply roofing membrane to damp or frozen deck surface or when precipitation is expected or occurring.

1.08 WARRANTY

A. Correct defective Work within a two year period after Date of Substantial Completion.

B. Provide twenty year manufacturer's material and labor warranty to cover failure to prevent penetration of water.

C. Provide manufacturer's roof damage warranty as standard with installation of a reinforced membrane.

PART 2 PRODUCTS

2.01 MANUFACTURERS

A. EPDM Membrane Materials:
   1. Carlisle SynTec: www.carlisle-syntec.com.
   2. Firestone Building Products Co: www.firestonebpco.com.
   3. GenFlex Roofing Systems: www.genflex.com.

B. Insulation:
   1. Any manufacturer approved by roof membrane manufacturer.

2.02 ROOFING

A. Elastomeric Membrane Roofing: One ply membrane, fully adhered, over insulation.

B. Acceptable Insulation Types - Constant Thickness Application:
   1. Minimum 2 layers of polyisocyanurate board.

C. Acceptable Insulation Types - Tapered Application:
   1. Tapered polyisocyanurate board.

2.03 ROOFING MEMBRANE AND ASSOCIATED MATERIALS

A. Membrane: Ethylene-propylene-diene-terpolymer (EPDM); internally reinforced with fabric or scrim.
   1. Thickness: 0.060 inch.
   2. Color: Black.

B. Seaming Materials: As recommended by membrane manufacturer.

C. Membrane Fasteners: As recommended by and approved by membrane manufacturer.

D. Flexible Flashing Material: Same material as membrane; conforming to the following:
   1. Thickness: 0.60 mil.
   2. Color: Black.

2.04 INSULATION

A. Polyisocyanurate Board Insulation: Rigid cellular foam, complying with ASTM C1289, and with the following characteristics:
   1. Compressive Strength: 20 psi
   2. Board Thickness: 2 layers for a total of 4 inch.
   3. Thermal Resistance: R-value of 25.
   4. Manufacturer: As approved by roof membrane manufacturer.

2.05 ACCESSORIES

A. Stack Boots: Prefabricated flexible boot and collar for pipe stacks through membrane; same material as membrane.
   1. Use 2- piece split boot for existing mechanical post, piping and conduits.

B. Insulation Fasteners: Appropriate for purpose intended and approved by roofing

manufacturer.

C. Membrane Adhesive: As recommended by membrane manufacturer.

D. Insulation Adhesive: As recommended by insulation manufacturer.

E. Walkway Pads: Suitable for maintenance traffic, contrasting color or otherwise visually distinctive from roof membrane.
   1. Composition: Asphaltic with mineral granule surface or Roofing membrane manufacturer's standard.
   2. Size: 18 x 18 inch.

2.06 ROOF DRAINS

A. Roof Drain: Repair/reuse existing cast iron drains or as a Contractor's option use Zurn, Josam or OMG replacement roof drain. Sized to suit existing roof drain body. Verify roof drain diameter. Base the bid on a 4 inch drain and field verify prior to submittal.

PART 3 EXECUTION

3.01 EXAMINATION

A. Verify that surfaces and site conditions are ready to receive work.

B. Verify deck is clean and smooth, flat, free of depressions, waves, or projections, properly sloped and suitable for installation of roof system.

C. Verify deck surfaces are dry and free of snow or ice.

D. Verify that roof openings, curbs, and penetrations through roof are solidly set, and nailing strips and reglets are in place.

3.02 INSULATION - UNDER MEMBRANE

A. Attachment of Insulation:
   1. Mechanically fasten or adhere first layer of insulation to concrete deck in accordance with roofing manufacturer's instructions and Factory Mutual requirements. Attachment method will be the contractor's option.
   2. Embed second layer of insulation into full bed of adhesive in accordance with roofing and insulation manufacturers' instructions.

B. Lay subsequent layers of insulation with joints staggered minimum 6 inch from joints of preceding layer.

C. Place tapered insulation to the required slope pattern in accordance with manufacturer's instructions.

D. Lay boards with edges in moderate contact without forcing. Cut insulation to fit neatly to perimeter blocking and around penetrations through roof.

E. At roof drains, use boards cut to slope to slope down to roof drains over a distance of 12 inches.
   1. See drawings for tapered insulation layout for crickets to drain.

F. Do not apply more insulation than can be covered with membrane in same day.

3.03 MEMBRANE APPLICATION

A. Roll out membrane, free from wrinkles or tears. Place sheet into place without stretching.

B. Shingle joints on sloped substrate in direction of drainage.

C. Fully Adhered Application: Fully embed membrane in adhesive except in areas directly over or within 3 inches of expansion joints. Fully adhere one roll before proceeding to adjacent rolls.

D. At intersections with vertical surfaces:
   1. Fully adhere flexible flashing over membrane and up to nailing strips.

E. Around roof penetrations, seal flanges and flashings with flexible flashing.

F. Coordinate installation of roof drains and curbs and pipe penetrations and related flashings.

3.04 ROOF DRAIN INSTALLATION

A. Repair roof drain to accept new membrane or Install roof drain inside the existing drain as instructed by manufacturer.

3.05 PROTECTION

A. Protect installed roofing and flashings from construction operations.

B. Where traffic must continue over finished roof membrane, protect surfaces using durable materials.

END OF SECTION

SECTION 07-6200

SHEET METAL FLASHING AND TRIM

PART 1 GENERAL

1.01 SECTION INCLUDES

A. Fabricated sheet metal items, including flashings, counterflashings, gutters, and downspouts.

B. Sealant.

C. Coping can be reused or replaced (Contractor Option).

D. Sheet metal splash pans.

1.02 RELATED REQUIREMENTS

A. Section 06-1000 - Rough Carpentry: Wood blocking.

1.03 SUBMITTALS

A. See Section 01-3000 - Administrative Requirements, for submittal procedures.

B. Samples: Submit two samples 2x3 inch in size illustrating metal finish color.

1.04 QUALITY ASSURANCE

A. Perform work in accordance with SMACNA Architectural Sheet Metal Manual requirements, except as otherwise indicated.

PART 2 PRODUCTS

2.01 SHEET MATERIALS

A. Pre-Finished Galvanized Steel: ASTM A653/A653M, with G90/Z275 zinc coating; minimum 0.02 inch thick base metal, shop pre-coated with PVDF coating.
   1. PVDF (Polyvinylidene Fluoride) Coating: Superior Performance Organic Finish, AAMA 2605; multiple coat, thermally cured fluoropolymer finish system.
   2. Color: As selected by Architect from manufacturer's standard colors.

2.02 ACCESSORIES

A. Fasteners: Galvanized steel.(neoprene washers where exposed fasteners can only be used). Drilled and adhesive type at limestone coping.

B. Sealant: Polyurethane or silicone as recommended by roof installer.

2.03 FABRICATION

A. Form sections true to shape, accurate in size, square, and free from distortion or defects.

B. Form pieces in longest possible lengths.

C. Hem exposed edges on underside 1/2 inch; miter and seam corners.

D. Form material with flat lock seams, except where otherwise indicated. At moving joints, use sealed lapped, bayonet-type or interlocking hooked seams.

E. Fabricate corners from one piece with minimum 18 inch long legs; seam for rigidity, seal with sealant.

F. Fabricate vertical faces with bottom edge formed outward 1/4 inch (6 mm) and hemmed to form drip.

G. Cleats formed to conceal fasteners and shall be continuous.

H. Fabricate pedestal hood to suit the frame fabrication as indicated.

2.04 GUTTER AND DOWNSPOUT FABRICATION

A. Gutters: SMACNA Architectural Sheet Metal Manual, Rectangular profile.

B. Gutters and Downspouts: Size indicated.

C. Accessories: Profiled to suit gutters and downspouts.
   1. Gutter Supports: Brackets.
   2. Downspout Supports: Straps.

D. Splash Pans: Same metal type as downspouts, formed to 12x30 inches size; rolled sides of 4 inch high for inverted pan placement.

E. Seal metal joints.

PART 3 EXECUTION

3.01 EXAMINATION

A. Verify roof openings, curbs, pipes, sleeves, ducts, and vents through roof are solidly set, reglets in place, and nailing strips located.

B. Verify roofing termination and base flashings are in place, sealed, and secure.

3.02 INSTALLATION

A. Secure flashings in place using concealed fasteners. Use exposed fasteners only where permitted.

B. Fit flashings tight in place. Make corners square, surfaces true and straight in planes, and lines accurate to profiles.

C. Seal metal joints watertight.

D. Apply sealants to joints that can not be sealed by any other means.

E. Secure gutters and downspouts in place using concealed fasteners.

F. Slope gutters 1/8 inch per foot minimum.

G. Set splash pans under downspouts.

END OF SECTION

SECTION 07-7200

ROOF ACCESSORIES

PART 1 GENERAL

1.01 SECTION INCLUDES

A. Manufactured curbs and conduit and pipe support.

1.02 SUBMITTALS

A. See Section 01-3000 - Administrative Requirements, for submittal procedures.

B. Product Data: Manufacturer's data sheets on each product to be used.
   1. Installation methods.
   2. Maintenance requirements.

PART 2 PRODUCTS

2.01 MANUFACTURED CURBS

A. Manufactured Curbs, Equipment Rails, and Other Roof Mounting Assemblies:
   1. AES Manufacturing Inc.: www.aescurb.com.
   2. The Pate Company: www.patecurbs.com.
   3. Roof Products & Systems (RPS) by Commercial Products Group of Hart & Cooley, Inc: www.rpscurbs.com.
   4. Substitutions: See Section 01-6000 - Product Requirements.

B. Manufactured Curbs, Equipment Rails, and Other Roof Mounting Assemblies: Factory-assembled hollow sheet metal construction with fully mitered and welded corners, integral counterflashing, internal reinforcing, and top side and edges formed to shed water.
   1. Sheet Metal: Hot-dip zinc coated steel sheet complying with ASTM A653/A653M, SS Grade 33 ; G60 coating designation; 18 gage, 0.048 inch thick.
   2. Manufacture curb bottom and mounting flanges for installation directly on roof deck, not on insulation; match slope and configuration of roof deck.
   3. Provide the layouts and configurations shown on the drawings.

C. Curbs Adjacent to Roof Openings: Provide curb on all sides of opening, with top of curb horizontal for equipment mounting.
   1. Provide preservative treated wood nailers along top of curb.
   2. Insulate inside curbs with 1-1/2 inch thick fiberglass insulation.
   3. Height Above Finished Roof Surface: 6 inches, minimum.
   4. Height Above Roof Deck: 12 inches, minimum.

2.02 NON-PENETRATING ROOFTOP SUPPORTS

A. Manufacturers - Non-Penetrating Rooftop Assemblies:
   1. PHP Systems/Design: www.phpsd.com.
   2. OMG Roofing Products; www.olyfast.com.

B. Non-Penetrating Rooftop Assemblies: Manufacturer-engineered and factory-fabricated, with pedestal bases that rest on top of roofing membrane, not requiring any attachment to the roof structure and not penetrating the roofing assembly.
   1. Design Loadings and Configurations: As required by applicable codes.
   2. Height: Provide minimum clearance of 6 inches under supported items to top of roofing.
   3. Support Spacing and Base Sizes: As required to distribute load sufficiently to prevent indentation of roofing assembly.
   4. Steel Components: Stainless steel, or carbon steel hot-dip galvanized after fabrication in accordance with ASTM A123/A123M.
   5. Hardware, Bolts, Nuts, and Washers: Stainless steel, or carbon steel hot-dip galvanized after fabrication in accordance with ASTM A153/A153M.

C. Pipe Supports: Provide attachment fixtures complying with MSS SP-58 and as indicated.

1. Attachment/Support Fixtures: As recommended by manufacturer, same type as indicated for equivalent indoor hangers and supports; corrosion resistant material.

D. Non-Penetrating Pedestals: Steel pedestals with square, round, or rectangular bases.
1. Bases: High density polypropylene.
2. Base Sizes: As required to distribute load sufficiently to prevent indentation of roofing assembly.
3. Steel Components: Stainless steel, or carbon steel hot-dip galvanized after fabrication in accordance with ASTM A123/A123M.

E. Mechanical Equipment Pad: Plastic skid type that is manufacteured for pupose of setting small mechanical units (less than 400 lbs) on roof surface. Note: the use of treated wood for support is not acceptable.

PART 3 EXECUTION

3.01 INSTALLATION

A. Install in accordance with manufacturer's instructions, in manner that maintains roofing weather integrity.

END OF SECTION

Appendix Photos for
Task 2: Public Safety Building

Photo 1.JPG

Photo 2.JPG

Photo 3.JPG

Photo 4.JPG

Photo 5.JPG

Photo 6.JPG

Appendix Photos for
Task 2: Public Safety Building

Photo 7.JPG

Photo 8.JPG

Photo 9.JPG

Photo 10.JPG

Photo 11.JPG

Photo 12.JPG

Appendix Photos for
Task 2: Public Safety Building

Photo 13.JPG

Photo 14.JPG

Photo 15.JPG

Photo 16.JPG

ROOF REPLACEMENT
FOR
TASK 2: PUBLIC SAFETY BUILDING

905 COURT STREET LYNCHBURG, VIRGINIA 24504

LYNCHBURG CITY BUILDING NO. CT303

ARCHITECT

CRADDOCK CUNNINGHAM
ARCHITECTURAL PARTNERS P.C.

10 NINTH STREET
LYNCHBURG, VA. 24504
phone: (434) 846-8456
fax: (434) 846-4534
email: info@ccappc.com
contact person: Mark Smith, Architect
direct email: mark@ccappc.com

OWNER

CITY OF LYNCHBURG, VA
PUBLIC WORKS DEPARTMENT

BUILDINGS & GROUNDS DIVISION
800 ORCHARD STREET
LYNCHBURG, VA. 24501
phone: (434) 455-4409
fax: (434) 845-1813
email: scott.glass@lynchburgva.gov
contact person: Scott Glass, AIA

DRAWING LIST

CS1.1 Cover Sheet

A1.1 Roof Plan & Details

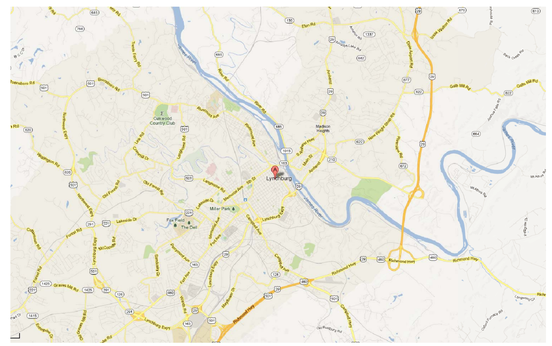

VICINITY MAP

NORTH

SITE MAP

NORTH

ABBREVIATIONS

AB	ANCHOR BOLT
ABV	ABOVE
ACST	ACOUSTIC
ACT	ACOUSTICAL CEILING TILE
AFF	ABOVE FINISHED FLOOR
AGGR	AGGREGATE
AHR	ANCHOR
AL	ALUMINUM
APC	ARCHITECTURAL PRECAST
APPROX	APPROXIMATE
ARCH	ARCHITECTURAL
AVG	AVERAGE
BD	BOARD
BET	BETWEEN
BLDG	BUILDING
BLK	BLOCKING
BM	BEAM
BOT	BOTTOM
BRG	BEARING
BUR	BUILT-UP ROOF(ING)
C/C	CENTER TO CENTER
CIP	CAST-IN-PLACE, CAST IRON PIPE
CJ	CONTROL JOINT
℄, CL	CENTER LINE
CFS	COLD FORMED STEEL
CFMF	COLD FORMED METAL FRAMING
CLG	CEILING
CLR	CLEAR
CMU	CONCRETE MASONRY UNIT
COL	COLUMN
COMP	COMPOSITE
CONC	CONCRETE, CONCENTRATED
CONN	CONNECT(ED), CONNECTION
CONSTR	CONSTRUCTION
CONT	CONTINUATION, CONTINUOUS, CONTROL
CONTR	CONTRACT, CONTRACTOR
COORD	COORDINATE
CORR	CORRIDOR, CORRUGATED
CT	CERAMIC TILE
CTNG	COATING
CTR	CENTER
CTSK	COUNTERSUNK DEPTH, DEEP
DBL	DOUBLE
DEPT	DEPARTMENT
DET	DETAIL(ED)
DIA	DIAMETER
DIAG	DIAGONAL, DIAGRAM
DIM	DIMENSION
DK	DECK
DN	DOWN
DOH	DOOR OPENING HEIGHT
DOW	DOOR OPENING WIDTH
DP	DAMPPROOFING
DR	DOOR
DS	DOWNSPOUT
DWG	DRAWING
EA	EACH
EIFS	EXTERIOR INSULATION FINISH SYSTEM
EJ	EXPANSION JOINT
EL	ELEVATION
ELEC	ELECTRIC(AL)
ELEV	ELEVATOR, ELEVATION
ENCL	ENCLOSE(URE)
EQ	EQUAL
EQPT	EQUIPMENT
EWC	ELECTRIC WATER COOLER
EXH	EXHAUST
EXIST	EXISTING
EXP	EXPOSED
EXPN	EXPANSION
EXT	EXTERIOR
FAW	FLASHING & WEEPS
FD	FLOOR DRAIN
FDN	FOUNDATION
F/F	FACE TO FACE
FIN	FINISH(ED)
FL	FLOOR
FRP	FIBERGLASS REINFORCED POLYESTER
FT	FOOT(FEET)
FRT	FIRE RETARDANT TREATED
FTG	FOOTING
FUT	FUTURE
GA	GAGE
GAL	GALLON
GALV	GALVANIZE(D)
GL	GLASS
GRTG	GRATING
GWB	GYPSUM WALLBOARD
GYP	GYPSUM
H	HEIGHT, HIGH
HB	HOSE BIBB
HBD	HARDBOARD
HC	HANDICAPPED
HDW	HARDWARE
HDWD	HARDWOOD
HM	HOLLOW METAL
HMD	HOLLOW METAL DOOR
HMF	HOLLOW METAL FRAME
HOR	HORIZONTAL
HPT	HIGH POINT
HR	HANDRAIL
HT	HEIGHT
HVAC	HEATING, VENTILATING & AIR CONDITIONING
HW	HOT WATER
ID	INSIDE DIAMETER
IN	INCH
INCL	INCLUSIVE
INSTL	INSTALL(ED)
INSUL	INSULATE(ED)(ING)(ION)
INT	INTERIOR
INTMD	INTERMEDIATE
ISOL	ISOLATION
JAN	JANITOR
JST	JOIST
JT	JOINT(S), POWER TRANSMITTER
KOP	KNOCKOUT PANEL
L	LENGTH, LINE, LONG
LAB	LABORATORY
LAM	LAMINATE
LAV	LAVATORY
LB	POUND
LF	LINEAR FOOT
LG	LENGTH, LONG
LIN	LINEAR
LL	LIVE LOAD
LLH	LONG LEG HORIZONTAL
LLV	LONG LEG VERTICAL
LOC	LOCATION
LONG	LONGITUDINAL
LPT	LOW POINT
MACH	MACHINE
MAS	MASONRY
MATL	MATERIAL
MAX	MAXIMUM
MCT	MARMOLEUM COMPOSITE TILE
MDF	MEDIUM DENSITY FIBERBOARD
MECH	MECHANICAL
MEZZ	MEZZANINE
MFR	MANUFACTURER
MIN	MINIMUM
MISC	MISCELLANEOUS
MO	MASONRY OPENING
MOH	MASONRY OPENING HEIGHT
MOW	MASONRY OPENING WIDTH
MT	MOUNT
MTL	METAL
MUL	MULLION
MWP	MEMBRANE WATERPROOFING
N	NORTH
NIC	NOT IN CONTRACT
NO.	NUMBER
NOM	NOMINAL
NST	NONSLIP TREAD
NTS	NOT TO SCALE
OAH	OVERALL HEIGHT
OAW	OVERALL WIDTH
OC	ON CENTER
OD	OUTSIDE DIAMETER
OFCI	OWNER FURNISHED CONTRACTOR INSTALLED
OFOI	OWNER FURNISHED OWNER INSTALLED
OFFI	OFFICE
OH	OVERHEAD
OPNG	OPENING
OPP	OPPOSITE
O/O	OUT TO OUT
PI	PERIMETER INSULATION
PL	PLATE
PL	PROPERTY LINE
PLAM	PLASTIC LAMINATE
PLAS	PLASTER
PLYWD	PLYWOOD
PNLG	PANELING
PR	PAIR
PSF	POUNDS PER SQUARE FOOT
PSI	POUNDS PER SQUARE INCH
PT	PRESSURE TREATED, POINT, POINT OF TANG.
PTN	PARTITION
PVC	POLYVINYL CHLORIDE, POINT OF VERTICAL CURVE
QT	QUARRY TILE
R	RADIUS,REACTION, RISER,RESISTANCE
RA	RETURN AIR
RAF	RESILIENT ATHLETIC FLOORING
RCP	REFLECTED CEILING PLAN
RCPT	RECEPTACLE(S)
RD	ROOF DRAIN
REF	REFERENCE
REINF	REINFORCE(MENT)(ING)
REQD	REQUIRED
REQMT	REQUIREMENT(S)
RESIL	RESILIENT
RET	RETURN
REV	REVERSE ACTING, REVISED, REVISION
RF	RETURN FAN, ROOF
RG	RETURN GRILLE
RM	ROOM
RO	ROUGH OPENING
RU	ROLL UP
S	SOLID, SOUTH, SWITCH
SA	STATUS ALARM, SUPPLY AIR
SCF	STEEL CHANNEL FRAME
SCHED	SCHEDULE
SECT	SECTION
SF	SQUARE FEET (FOOT)
SG	SUPPLY GRILLE
SGFU	STRUCTURAL GLAZED FACING UNITS
SH	SHEET
SIM	SIMILAR
SLP	SLOPE
SNT	SEALANT
SPEC	SPECIFICATION(S)
SPFI	SPRAY POLYURETHANE FOAM INSULATION
SPM	SINGLE PLY MEMBRANE
SQ	SQUARE
SST	STAINLESS STEEL
STC	SOUND TRANSMISSION COEFFICIENT
STD	STANDARD
STL	STEEL
STO	STORAGE
STRUCT	STRUCTURAL
SUSP	SUSPEND(ED)
SYM	SYMMETRICAL
SYS	SYSTEM
TEL	TELEPHONE
T&G	TONGUE AND GROOVE
THK	THICK(NESS)
THR	THRESHOLD
TOJ	TOP OF JOIST
TOS	TOP OF STEEL
TOT	TOTAL
TRD	TREAD
TRTD	TREATED
T'STAT	THERMOSTAT
TYP	TYPICAL
UON	UNLESS OTHERWISE NOTED
UTIL	UTILITY
VCT	VINYL COMPOSITION TILE
VENT	VENTILATE
VERT	VERTICAL
VEST	VESTIBULE
VIF	VERIFY IN FIELD
VNR	VENEER
VTR	VENT THRU ROOF
VWC	VINYL WALL COVERING
W/	WITH
WC	WATER CLOSET, WATER COLUMN
WD	WOOD
WDO	WINDOW
W/O	WITHOUT
WOH	WINDOW OPENING HEIGHT
WOW	WINDOW OPENING WIDTH
WP	WEATHERPROOF, WORKING POINT
WRGWB	WATER RESISTANT GYPSUM WALLBOARD
WWF	WELDED WIRE FABRIC
W	WEST

SYMBOL LEGEND

PRE CAST ARCHITECTURAL CONCRETE *APC*

GYPSUM WALLBOARD

BRICK OR MASONRY VENEER

CONCRETE MASONRY UNITS *CMU*

RIGID INSULATION

BATT INSULATION

COLUMN TAG

ELEVATION MARKER

WALL TYPE TAG

DOOR TAG

GENERAL NOTE TAG

LOUVER TAG

WINDOW TAG

INTERIOR ELEVATION MARKER

ELEVATION NUMBER

ELEVATION SHOWN ON THIS SHEET

FINSH SCHEDULE TAG

SOUTH WALL
CEILING
REMARKS
EAST WALL
WEST WALL
BASE
FLOOR
NORTH WALL

FINISH WOOD

PLYWOOD

CONCRETE

CRUSHED STONE BASE MATERIAL

EARTH

STEEL

ELEVATION REFERENCE SYMBOL

ELEV. SHOWN ON THIS DWG

DETAIL REFERENCE SYMBOL

DETAIL SHOWN ON THIS DWG

SECTION REFERENCE SYMBOL

SECTION SHOWN ON THIS DWG

SECTION REFERENCE SYMBOL 2

USED ON INT. ELEVS. WITH SEVERAL SECTIONS CUT FOUND ON A COMMON SHEET. SHEET NUMBER NOTED WITH SECTION DETAILS.

CRADDOCK CUNNINGHAM ARCHITECTURAL PARTNERS

ARCHITECTURE - PLANNING - INTERIOR DESIGN
10 9th Street, Lynchburg, Virginia 24504 p:434-846-8456 f:434-846-4534
www.craddockcunningham.com info@ccappc.com

CITY OF LYNCHBURG
TASK 2: PUBLIC SAFETY BUILDING
LYNCHBURG, VA PROJECT NO: 13102

COMMONWEALTH OF VIRGINIA
CHAL C. CRADDOCK
Certificate No. 4114
5-21-2013
CERTIFIED ARCHITECT

WRITTEN DIMENSIONS ON THESE DRAWINGS SHALL TAKE PRECEDENCE OVER SCALED DIMENSIONS. CONTRACTORS SHALL VERIFY AND BE RESPONSIBLE FOR, ALL DIMENSIONS AND CONDITIONS ON THE JOB AND THIS OFFICE MUST BE NOTIFIED OF ANY VARIATION FROM THE DIMENSIONS AND CONDITIONS SHOWN BY THESE DRAWINGS.

DESIGNED: MWS
DRAWN: TCC
CHECKED: MWS
DATE: 2013-05-21
REVISIONS:

COVER SHEET

CS1.1

©2007 CRADDOCK CUNNINGHAM ARCHITECTURAL PARTNERS P.C. REV. 2007-1

LEGEND

- ROOF SLOPE
- 01 PHOTO REFERENCE
- DRAIN
- HVAC/MECHANICAL UNIT
- VENT PIPE
- COPING CAP

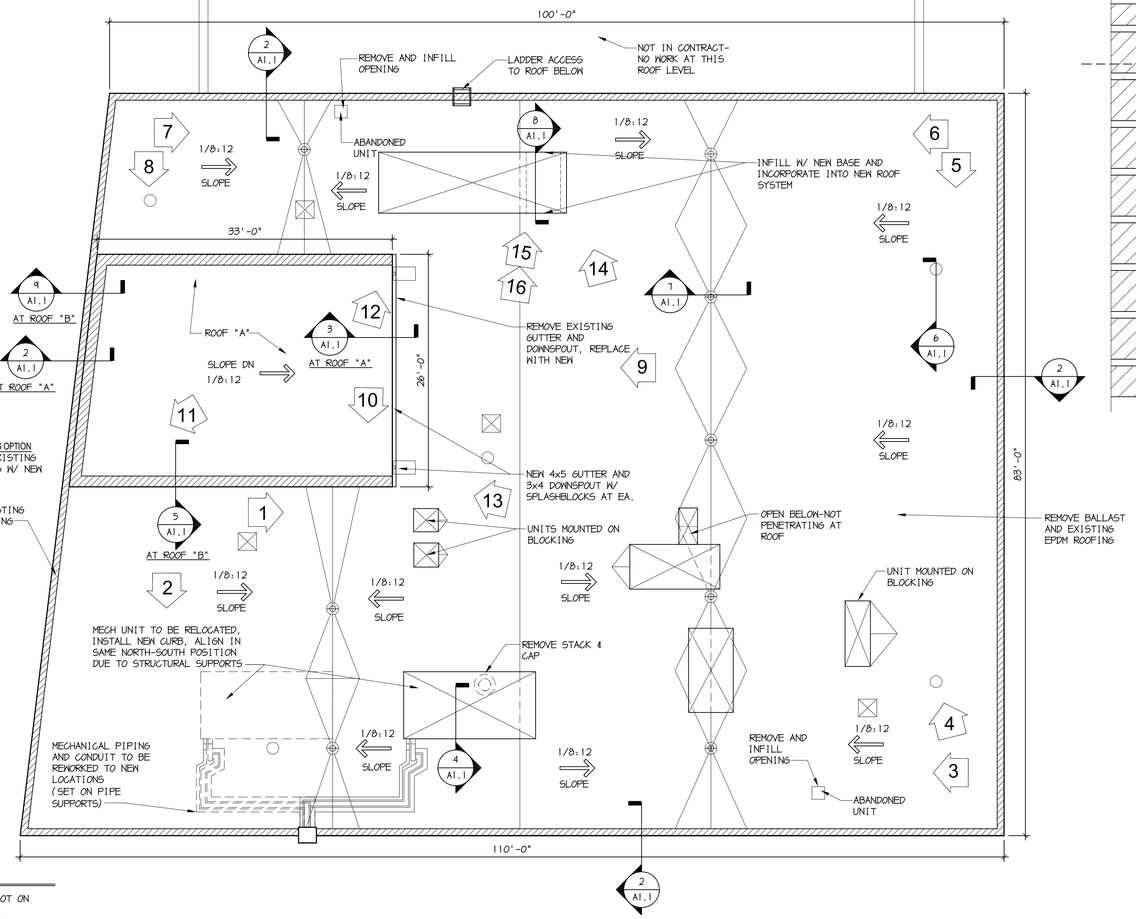

GENERAL NOTE

1. ALL DIMENSIONS ARE TAKEN LEVEL, NOT ON SLOPE OF ROOF. CONTRACTOR TO BE RESPONSIBLE FOR ALL QUANTITIES OF MATERIALS.
2. TAPER INSULATION TO ACHIEVE ¼"/FOOT SLOPE TO DRAINS. MINIMUM OF 1" DRAIN TAPER AT 18" RADIUS. VERIFY THICKNESS AT PERIMETER FOR WOOD BLOCKING AND INSULATION THICKNESS.

NORTH

1 / A1.1 ROOF PLAN BLDG. NO. CT303
1/8"=1'-0"

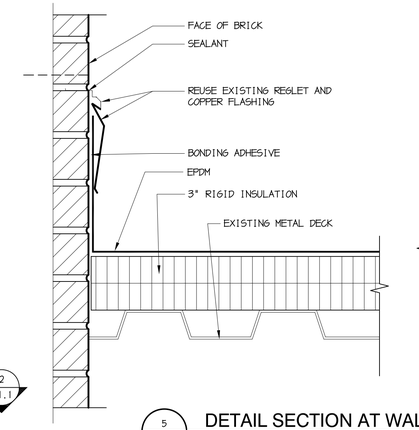

5 / A1.1 DETAIL SECTION AT WALL
3"=1'-0"

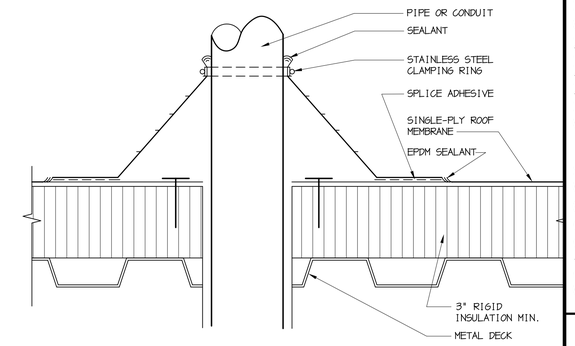

6 / A1.1 DETAIL SECTION AT VENT
3"=1'-0"

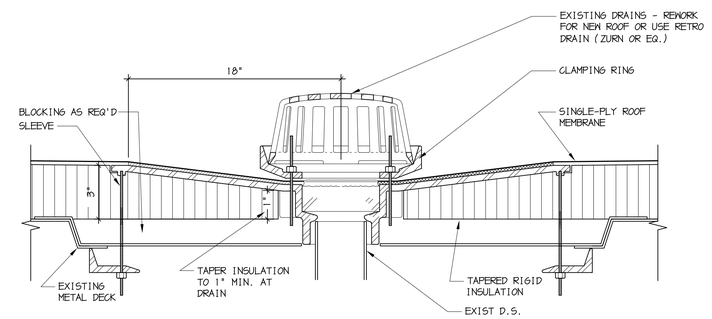

7 / A1.1 ROOF DRAIN DETAIL
1-1/2"=1'-0"

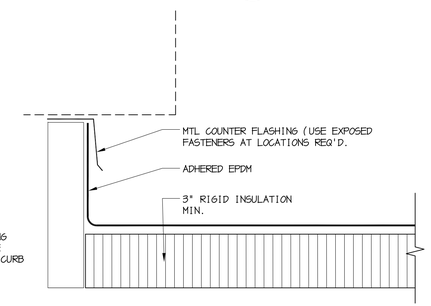

8 / A1.1 DETAIL AT EXISTING CURB
3"=1'-0"

CONTRACTOR'S OPTION

REPLACE EXISTING MTL COPING W/ NEW

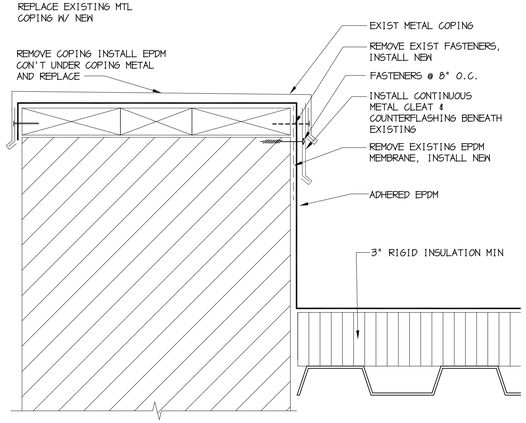

2 / A1.1 DETAIL SECTION
3"=1'-0"

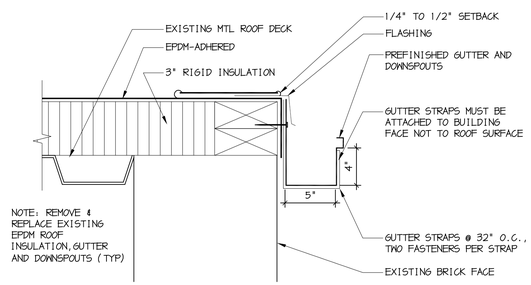

3 / A1.1 DETAIL SECTION AT GUTTER
3"=1'-0"

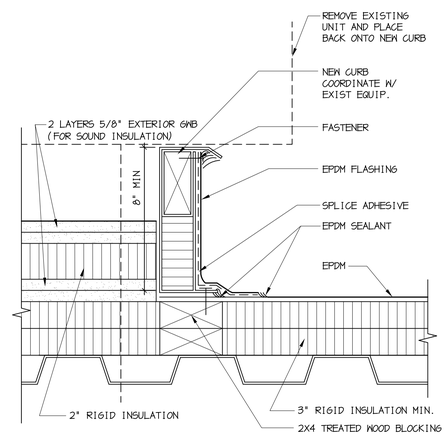

4 / A1.1 DETAIL SECTION AT NEW CURB
3"=1'-0"

DETAIL APPLIES ONLY IF COPING IS REPLACED

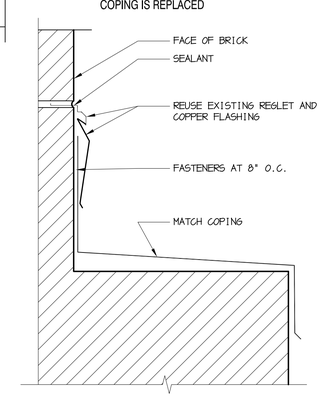

9 / A1.1 COPING DETAIL
3"=1'-0"

CRADDOCK CUNNINGHAM ARCHITECTURAL PARTNERS
ARCHITECTURE • PLANNING • INTERIOR DESIGN
10 9th Street, Lynchburg, Virginia 24504 p:434-846-8456 f:434-846-4534
www.craddockcunningham.com info@ccappc.com

CITY OF LYNCHBURG
TASK 2: PUBLIC SAFETY BUILDING

LYNCHBURG, VA

PROJECT NO: 13102

COMMONWEALTH OF VIRGINIA
CHAL C. CRADDOCK
Certificate No. 4114
5-21-2013
CERTIFIED ARCHITECT

WRITTEN DIMENSIONS ON THESE DRAWINGS SHALL TAKE PRECEDENCE OVER SCALED DIMENSIONS. CONTRACTORS SHALL VERIFY AND BE RESPONSIBLE FOR, ALL DIMENSIONS AND CONDITIONS ON THE JOB AND THIS OFFICE MUST BE NOTIFIED OF ANY VARIATION FROM THE DIMENSIONS AND CONDITIONS SHOWN BY THESE DRAWINGS.

DESIGNED: MWS
DRAWN: TCC
CHECKED: MWS
DATE: 2013-05-21
REVISIONS:

ROOF PLAN AND DETAILS

A1.1

©2007 CRADDOCK CUNNINGHAM ARCHITECTURAL PARTNERS, P.C. | REV. 2007-1