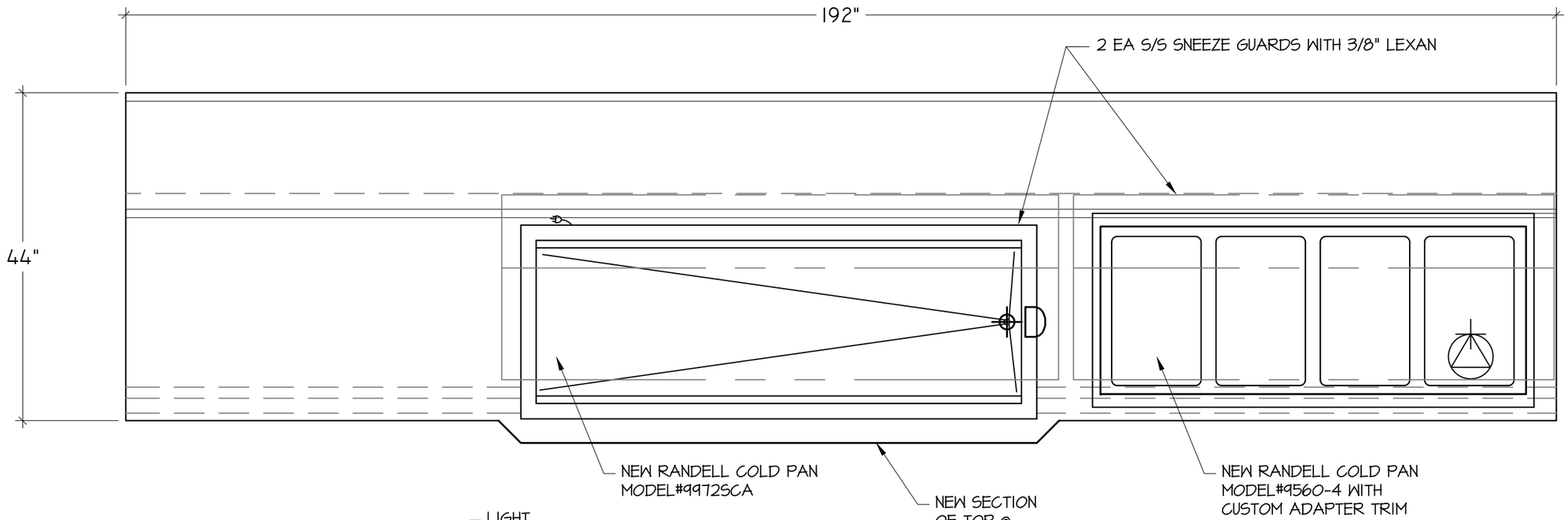

PLAN VIEW

Scale: 3/4" = 1'-0"

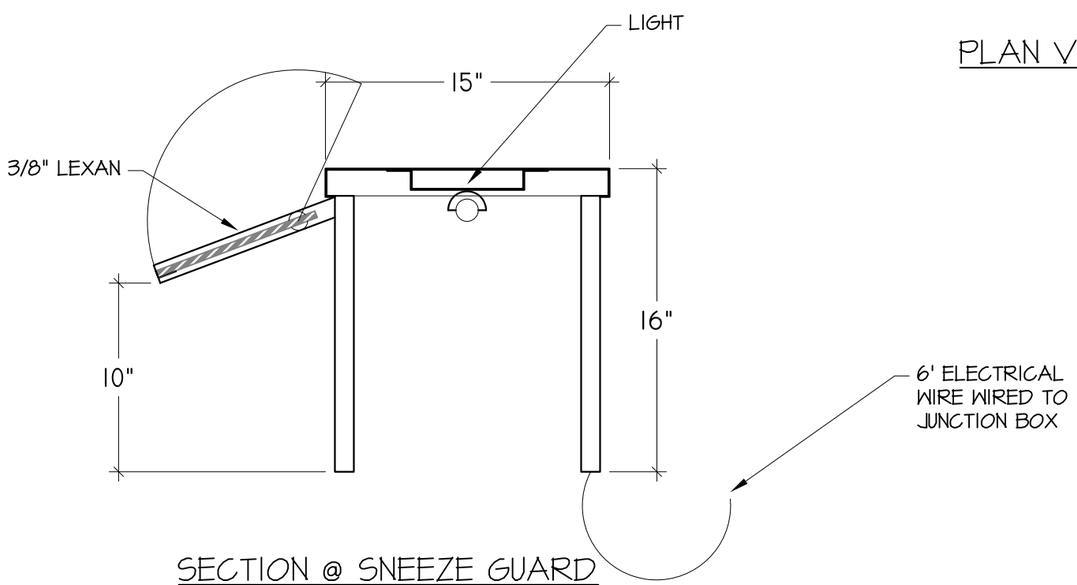

SECTION @ SNEEZE GUARD

Scale: 1-1/2" = 1'-0"

SANDUSKY QTY 2 EA 1 LEFT 1 RIGHT SERVING COUNTER MOD	OLD DOMINION METAL PRODUCTS INC. 1601-A OVERBROOK ROAD RICHMOND, VA 23220-1315 (804) 355-7123	SCALE: As Noted	DATE: 06/10/2013	SHEET NUMBER
		ESI DWG 13-050-1R1		1 OF 1

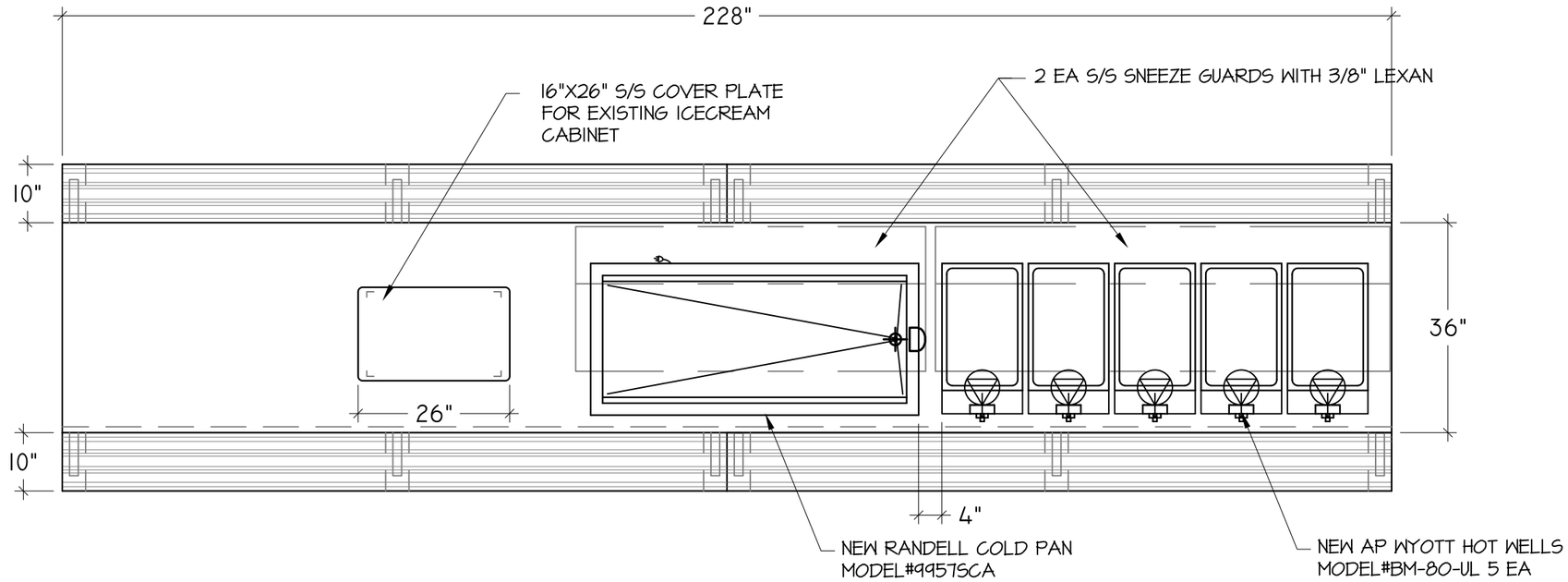

PLAN VIEW

Scale: 3/4" = 1'-0"

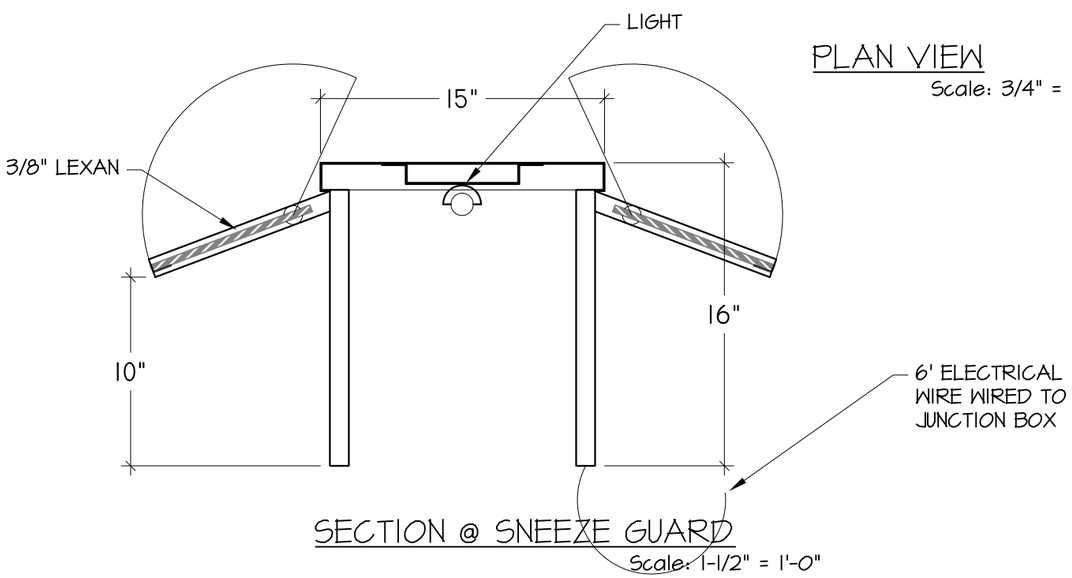

SECTION @ SNEEZE GUARD

Scale: 1-1/2" = 1'-0"

HERITAGE QTY 2 EA 1 LEFT 1 RIGHT SERVING COUNTER MOD	OLD DOMINION METAL PRODUCTS INC. 1601-A OVERBROOK ROAD RICHMOND, VA 23220-1315 (804) 355-7123	SCALE: As Noted	DATE: 06/10/2013	SHEET NUMBER
		ESI DWG 13-050-2R1		1 OF 1

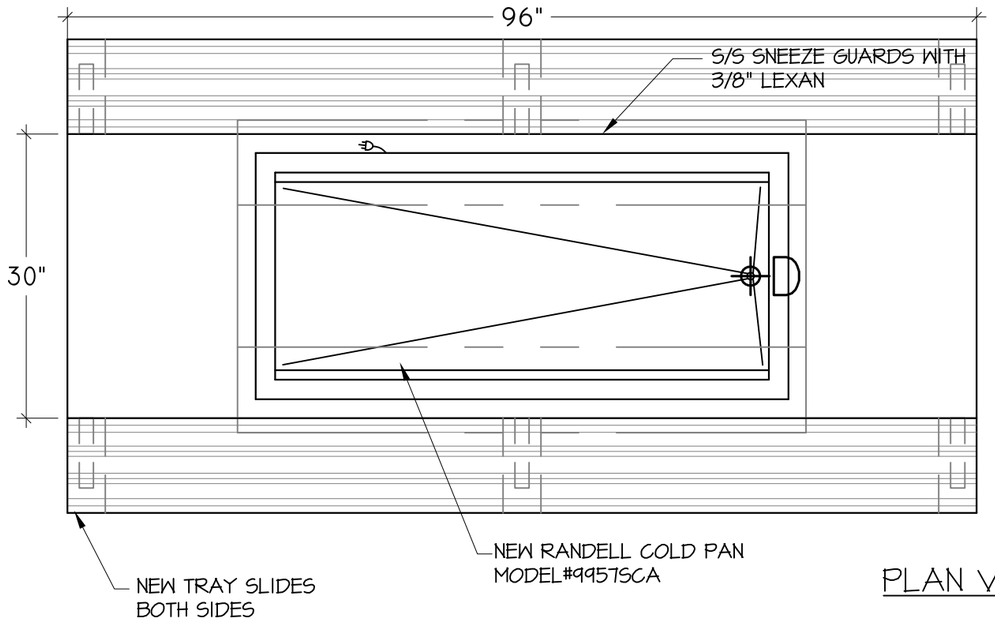

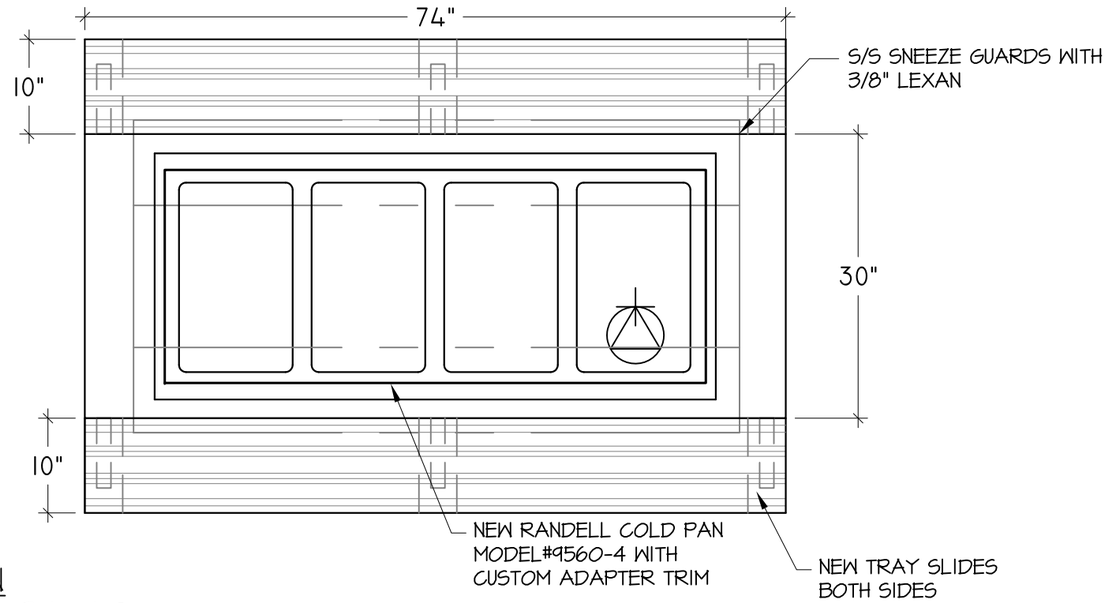

PLAN VIEW

Scale: 3/4" = 1'-0"

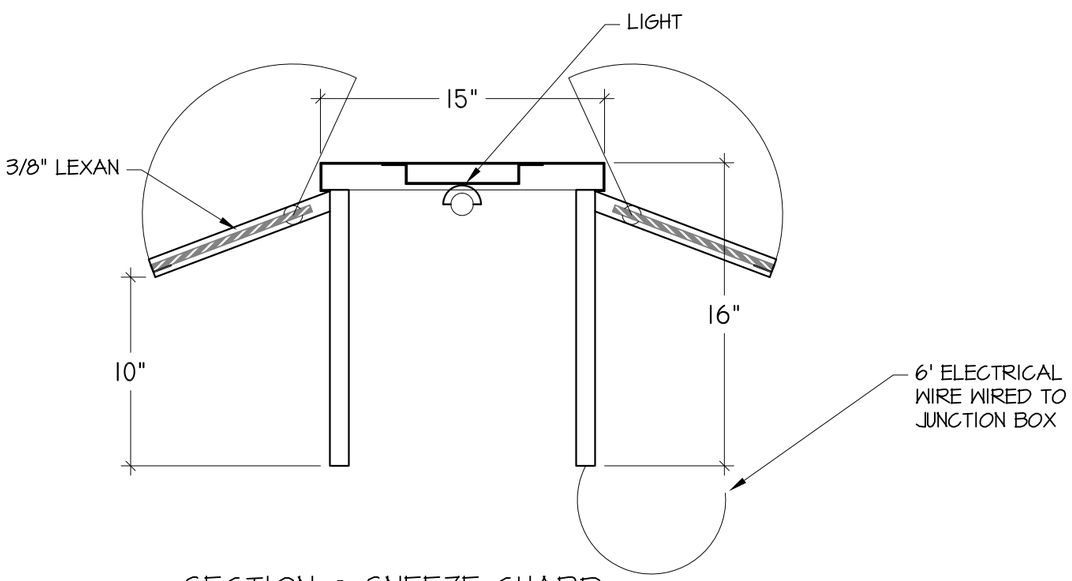

SECTION @ SNEEZE GUARD

Scale: 1-1/2" = 1'-0"

LINKHORNE MS QTY 1 EA SERVING COUNTER MOD	OLD DOMINION METAL PRODUCTS INC. 1601-A OVERBROOK ROAD RICHMOND, VA 23220-1315 (804) 355-7123	SCALE: As Noted	DATE: 06/10/2013	SHEET NUMBER
		ESI DWG 13-050-2R1		1 OF 1

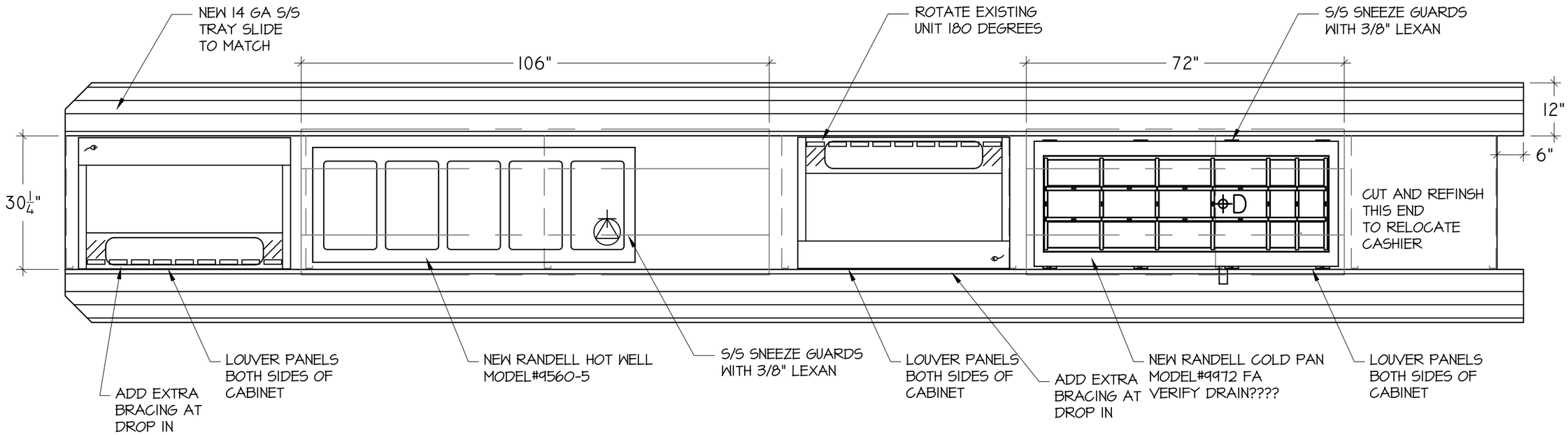

PLAN VIEW

Scale: 3/4" = 1'-0"

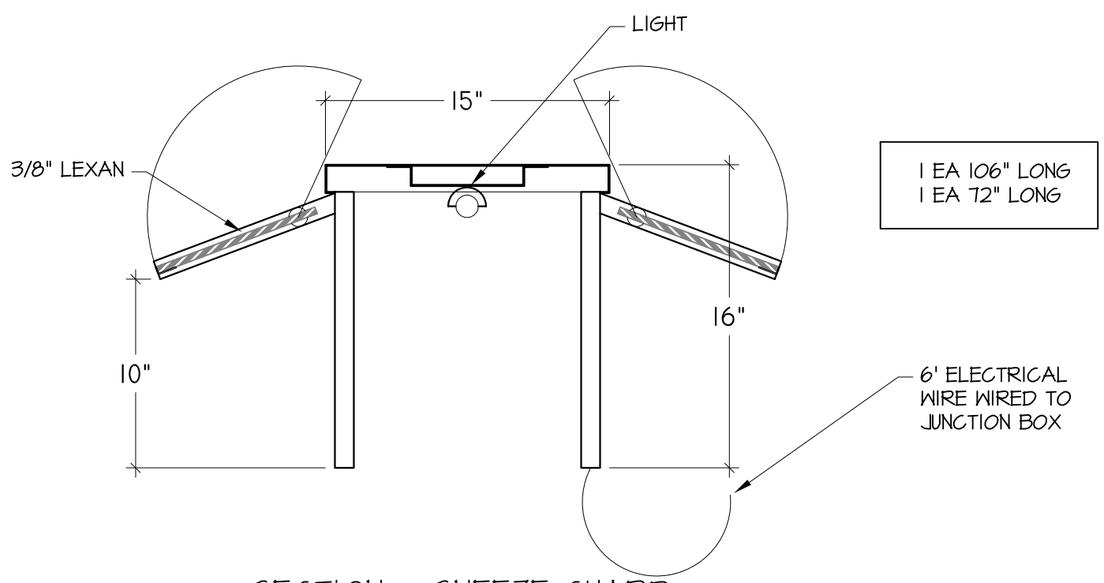

1 EA 106" LONG
1 EA 72" LONG

SECTION @ SNEEZE GUARD

Scale: 1-1/2" = 1'-0"

E.C. GLASS QTY 3 EA SERVING COUNTER MOD	OLD DOMINION METAL PRODUCTS INC. 1601-A OVERBROOK ROAD, RICHMOND, VA 23220-1315 (804) 355-7123	SCALE: As Noted	DATE: 06/25/2013	SHEET NUMBER
		ESI DWG 13-050-2		1 OF 1

192"