Stormwater Quality Design Protocol

INTRODUCTION

Article II of the City's Stormwater Ordinance provides for the submittal and review of stormwater management plans with development and redevelopment projects in excess of 1,000[1] square feet. This manual describes acceptable best management practices (BMPs) and design guidelines to comply with the ordinance. Other BMPs may also be proposed by applicants and considered by City staff during the review process. The City of Lynchburg will strive to model BMPs on its own construction projects where it can be addressed in this protocol.

BMP SELECTION PROCEDURES

The following discussion describes the standard Virginia Department of Conservation and Recreation (DCR) procedures for choosing BMPs for a development site. In some cases, the designer may wish to accommodate certain limiting feasibility factors by providing an innovative design which addresses or remedies the constraint outside of the standard procedures. In these cases it is strongly recommend that the desired mitigation strategy be presented to the City of Lynchburg's Phase II Stormwater Committee, along with the design features, supporting criteria, and any proposed compromises. This will facilitate the City's involvement and help avoid extensive revisions during the formal review process.

DCR STANDARD BMP SELECTION CRITERIA

The Virginia Stormwater Management Handbook presents two procedures for selecting stormwater quality BMPs. These are referred to as the *performance-based water quality criteria* and the *technology-based water quality criteria*.

Under the *performance-based* criteria, the site's theoretical post-development non-point pollution loading must be reduced by a specified percentage. The required pollutant reduction efficiency is based on a comparison of the site's pre-development percent impervious land cover, the site's post-development percent impervious land cover, and a City-wide standard value. The resulting required theoretical pollution reduction efficiency is then used to select an appropriate BMP from Table 1-1.

Under the *technology-based* water quality criteria, the appropriate BMP is selected from Table 1-1 based solely on the site's post-developed percent impervious.

PERFORMANCE-BASED BMP SELECTION CRITERIA

---

[1] Projects that have less than 5000 square feet of new or redeveloped impervious area may mitigate stormwater runoff by addressing landscaping/adequate channel requirements; as such, these projects may not require a formal stormwater management plan.

The *performance-based* criteria allows the designer to select a BMP based on a required pollutant load removal efficiency. To determine the required efficiency the site's pre-development and post-development impervious percentages are compared to the City-wide average land cover condition of 17%.

The comparison of impervious percentages will fall into one of the four situations described below:

> *In **Situation 1*** the existing percent impervious cover is less than or equal to the average land cover condition and the proposed improvements will create a total percent impervious cover which is still **less** than the average land cover condition.
>
> Pollutant Removal Requirement: No reduction in the post-development pollutant discharge is required.
>
> *In **Situation 2*** the existing percent impervious cover is less than or equal to the average land cover condition and the proposed improvements will create a total percent impervious cover which is **greater** than the average land cover condition.
>
> Pollutant Removal Requirement: The theoretical post-development pollutant discharge shall not exceed the theoretical average land cover pollutant discharge; a BMP (or BMPs) must be applied to mitigate the difference.
>
> *In **Situation 3*** the existing percent impervious cover is **greater** than the average land cover condition.
>
> Pollutant Removal Requirement: The theoretical post-development pollutant discharge shall not exceed the greater of (i) the pollutant discharge based on existing conditions less 10% or (ii) the pollutant discharge based on the average land cover condition; a BMP (or BMPs) may be required to mitigate the difference.
>
> *In **Situation 4*** the existing percent impervious cover is served by an **existing** stormwater management BMP that addresses water quality.
>
> Pollutant Removal Requirement: The pollutant discharge after development shall not exceed the theoretical pre-development pollutant discharge based on the existing BMP. The existing BMP shall be shown to have been designed and constructed in accordance with proper design standards and specifications, and to be in proper functioning condition. New maintenance agreements may be necessary for continued operation of the BMP, as well as design enhancements, to ensure continued successful operation in the redevelopment condition.

Since a project site may consist of several distinct drainage areas and discharge points, the designer must apply the removal efficiency of each BMP to the area draining to that BMP only. If this does not meet the overall removal requirement for the site, additional BMPs or more efficient BMPs must be selected, until the total pollutant removal satisfies the requirements. When BMPs are used in series the removal efficiency for each subsequent BMP shall be applied to the portion of the pollutant load being discharged by the next upstream facility.

POLLUTANT LOAD CACULATION

Using the Simple Method[2] the theoretical pollutant load is calculated for the post-development condition and for either the pre-development condition or for the average land cover condition, depending upon which situation discussed above is applicable.

Simple Method

$$L = [0.05 + (0.009 \times I)] \times A \times 2.28$$

Where: L = theoretical phosphorous load in pounds per year
I = percent impervious cover with percent expressed as a whole number
A = applicable area in acres

This formula is applied to the post-development condition and to either the pre-development and/or average land cover condition as appropriate. The required pollutant removal is then calculated for the condition as described under Situation 1 to Situation 4 on the previous page.

The required removal efficiency is then calculated by dividing the required pollutant removal by the post-development load.

Keystone Pollutant

The selection of a standard pollutant allows a consistent application of a performance based water quality criteria. The pollutant removal efficiencies in this methodology are based on the designated keystone pollutant which is phosphorous. Phosphorous was selected by the Chesapeake Bay Local Assistance Department in order to evaluate the performance of site design and BMPs at reducing pollutant export from a development site. Phosphorous was selected because it exhibits some of the characteristics of particulate pollutants, as well as those of soluble pollutants, making it a good indicator of urban pollutants in general. This is not meant to exclude other pollutants from being targeted. In situations where other pollutants are identified as a problem, such as from "stormwater hotspots"(Table 1-2), those other pollutants can be addressed.

---

[2] The *Simple Method* is empirical in nature and utilizes the extensive data base obtained in the Washington D. C. National Urban Runoff Pollution (N.U.R.P.) study, as well as the national N.U.R.P. data analysis (MWCOG, 1983) to establish pollutant loading values for various land uses. The derivation of the Simple Method can be found in Appendix A of Controlling Urban Runoff: A Practical Manual for Planning and Designing Urban BMPs, published by The Metropolitan Washington Council of Governments.

The calculated pollutant removal efficiency is identified in column 2 of Table 1-1 below and the resulting BMP is selected from column 3. The resulting BMP selection is subject to the constraints described below under Additional BMP Selection Criteria.

Table 1-1
Water Quality BMP Selection*

Column 1 for Technology Based Criteria (Using post-development percent impervious cover)	**Column 2 for Performance Based Criteria (Using target phosphorous removal efficiency)**	**Column 3 Appropriate Water Quality BMP**
16-21%	**10%**	**Vegetated filter strip**
	15%	**Grassed swale**
22-37%	**30%**	**Constructed wetlands**
	35%	**Extended detention with 2 x WQ volume**
	40%	**Retention basin I with 3 X WQ volume**
38-66%	**50%**	**Bioretention basin**
		Bioretention filter
		Enhanced extended detention
		Retention basin II with 4 X WQ volume
		Infiltration
67-100%	**65%**	**Sand filter**
		Infiltration with 2 X WQ volume
		Retention basin III with 4 X WQ volume and aquatic bench

*** Alternative BMPs, including manufactured systems may be used upon approval of City of Lynchburg Phase II Committee**

Special Cases for Some Less Impervious Sites

Since this methodology is based on impervious cover, there may be some developments such as golf courses, cemeteries, etc. which would be calculated as having no increase in pollutant load. Depending on the pre-developed land cover, this may or may not be the case. Unmanaged meadow which is graded into a golf course fairway will probably experience an increase in pollutant discharge. Since this is not accounted for in the calculation procedure, the designer and reviewer are encouraged to use sound engineering judgment in applying the water quality criteria. Site feasibility factors should be evaluated and an appropriate BMP selected where the calculation procedures do not accurately reflect the post-developed condition impact on water quality.

When improvements on a low density development are concentrated such that the impervious area is drained to a concentrated area, it is reasonable to expect that the developed condition of the runoff will have an overall impact on the receiving system in terms of water quality impairments, regardless of the overall “site” percent imperviousness, and therefore should be considered in the water quality strategy. In such cases the percent impervious cover calculation shall be based on the drainage area being collected by the improved drainage system. This strategy allows the overall impervious

cover to be kept low while allowing for the preservation of high priority open space such as stream buffers and unmanaged open space. However, the clustered development represents a significant source of increased runoff and pollutant load when directly connected to the drainage system. A low density development with scattered disconnected impervious cover can be considered to have negligible impacts on water quality if the clearing and grading has also been limited to the minimum needed to build the road and site the structures. Other considerations such as maintaining the natural stream buffers, avoiding steep slopes, and minimizing wetland impacts and tree removal should also be evaluated.

TECHNOLOGY-BASED BMP SELECTION CRITERIA

The selection of a BMP using the technology-based methodology is based on the post-development percent impervious. In Table 1-1, a water quality BMP is selected from Column 3 based on the post development percent impervious in Column 1.

The entire site must be addressed. For example, if an enhanced extended detention basin is selected, yet does not capture the runoff from the entire site to the effect that the calculated pollutant removal of the BMP does not satisfy the site or planning area pollutant removal requirement, then an additional BMP or a more efficient BMP must be designed. For example, consider a two acre parking area along the edge of an office park which does not drain to the enhanced extended detention facility. The designer may choose to incorporate a grassed swale with check dams to control the two acre drainage area.

SUBDIVISIONS

Except where Low Impact Development techniques are being implemented, the BMP selection criteria and calculation procedures should be applied to subdivision developments as a whole, and not to individual lots. Many subdivision developments can be effectively controlled with multiple BMPs serving individual lots or other concentrated areas of impervious cover. The calculation procedure accounting for all BMPs must still be applied to the development as a whole in order to calculate the total pollutant removal.

ADDITIONAL BMP SELECTION CRITERIA

The process of choosing a stormwater BMP must weigh the goals of the proposed facility against the limiting site feasibility factors of the proposed site or BMP location. The use of some BMPs are limited by site or watershed feasibility factors such as environmental impacts, drainage area, and topographic constraints. Some limiting factors include:

1. Topographic and Geologic Constraints

The physical characteristics of the site must be compatible with the performance of the BMP.

a. *High water table*: The water table should be between 2 and 4 feet below the bottom of any infiltration facility. A high water table will prevent the percolation of the stormwater into the sub soils, and may cause dry detention BMPs to evolve into wet facilities. While this may enhance pollutant removal by encouraging a marsh environment, it may not be the choice of design based on maintenance, aesthetics, etc. A high water table may also impact the construction of the embankment or impoundment facilities by making it difficult to achieve the proper compaction of the underlying foundation. Special geotechnical recommendations may be necessary to address impacts associated with a high water table.

b. *Bedrock:* The presence of bedrock close to the surface can have a significant impact on a development project. The cost of excavation increases considerably, especially if blasting is required. Blasting rock in the area of a proposed embankment is not acceptable unless a liner system is proposed for the basin. Blasting can open seams in the bedrock which may allow stormwater to drain out of (or under) the proposed facility. A thorough geotechnical investigation and report should verify the subsurface conditions for the presence of any of the above features. The scope and requirements of a geotechnical investigation may vary from site to site. Refer to **Virginia Stormwater Management Handbook Minimum Standard 3.10: General Infiltration Practices** for additional information on geotechnical investigations.

c. *Proximity to structures, steep slopes, and water supply wells.* One of the goals of stormwater facilities is to provide recharge of the groundwater. This tends to saturate the adjacent ground during, and for a period of time, aftera storm event. Buildings should be located at least 10 to 20 feet upslope of an infiltration facility and at least 100 feet away downslope. Saturating the soils on or adjacent to slopes 20 percent or greater can cause a failure of the slope and adjacent structures. The proximity to water supply wells raises concern over the introduction of pollutants into the water supply aquifer. The minimum distance from a water supply well is 100 feet.

2. Contributing Drainage Area Size

Some BMPs are restricted based upon the size of the contributing drainage area. The recommended maximum and minimum sizes are considered guidelines and some flexibility should be allowed. The exceptions, however, are the Manufactured BMP Systems. The manufacturer's design criteria should be adjusted or modified by the manufacturer only. The proper operation of these BMPs is dependent on the proper sizing of the structure.

3. Environmental Impacts

It is extremely important for the designer to asses the environmental impacts associated with the site development and the placement of the stormwater BMP. Local, State, and Federal regulations may restrict the disturbance, or encroachment upon any of the following: wetlands, Waters of the United States, stream or wetland buffers, floodplains, conservation easements, and other sensitive resources.

a. Virginia Water Protection Permit Program: The Virginia Department of Environmental Quality implements the Virginia Water Protection Permit (VWPP) Program. This program regulates all activities in Virginia which result in discharge of dredge or fill material into state waters. This can include wetlands, perennial streams, and other aquatic resources. The VWPP program is in conjunction with the U.S. Army Corps of Engineers Federal Permit authorized by the Clear Water Act. Some projects may require one or both permits. The permits typically require that the developer investigate alternatives to the proposed impacts. If no alternatives are viable, then possible design modifications may be needed, such as pre-treatment of stormwater prior to discharging into wetlands, thermal and dissolved oxygen impacts to the receiving stream be addressed, etc. The designer should contact the appropriate state and federal agencies prior to the design to identify such permit requirements.

b. National Flood Insurance Program: The Department of Conservation and Recreation (DCR) coordinates the Federal Emergency Management Agency (FEMA) National Flood Insurance Program (NFIP) in Virginia. Local governments implement local floodplain management ordinances consistent with the state and federal statutes. The designer should identify any mapped 100-year floodplain located on the project.

4. Multiple Discharge Points

The simplest site design includes a stormwater management strategy that consists of one discharge point from the site. Some developments, however, may contain multiple discharge locations as dictated by the topography. Traditionally, this situation has been addressed in one of two ways: 1) Provide a Stormwater BMP at each location as required by the size of the contributing drainage area and associated increase in project impacts, or 2) overcompensate at one or more discharge point(s) in order to allow other discharge point(s) to go uncontrolled.

a. Overcompensation of Peak Discharge is subject to the following conditions:
1. The discharge points shall be in the same watershed as defined by hydrologic unit codes (HUC). See Figure 1-1, Hydrologic Unit Map, for the four distinct HUC watersheds in the City of Lynchburg.
2. The discharge points are still subject to the requirements of MS-19, including that the receiving channel(s) be adequate to convey the increased flow and the discharge velocity.
3. The overall peak rate of discharge leaving the site must not exceed that of the pre-developed condition for the design events.

b. Overcompensation of Water Quality is subject to the following conditions:
1. The discharge points shall be in the same watershed as defined by hydrologic unit codes (HUC). See Figure 1-1, Hydrologic Unit Map, for the four distinct HUC watersheds in the City of Lynchburg.
2. Provide as much mitigation as practical in the uncontrolled or under-controlled drainage area.
3. The overall site water quality compliance must be determined using the performance-based water quality criteria.

Figure 1-1
Hydrologic Unit Map

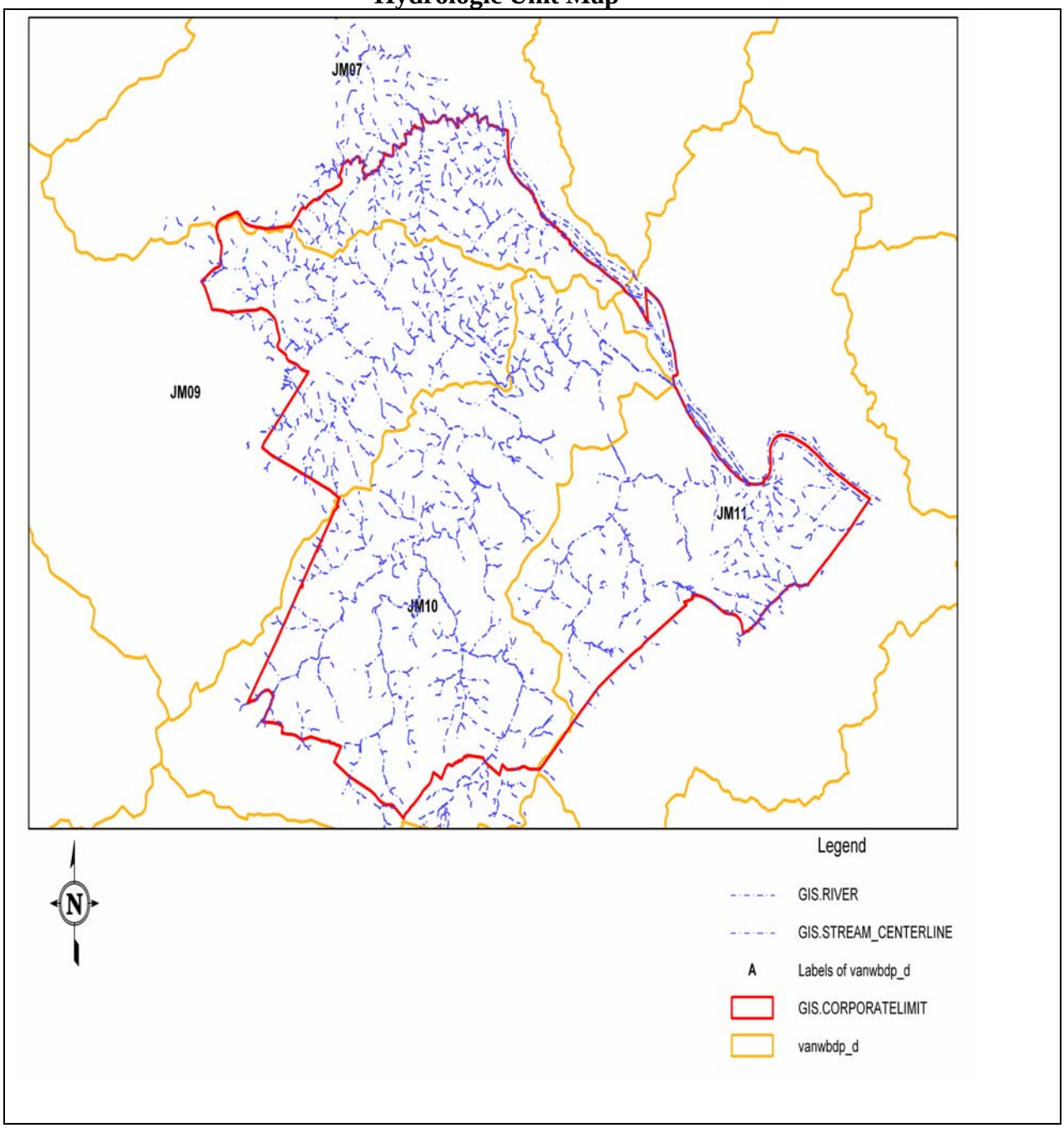

5. Pollutant Removal Efficiency

Years of pollutant removal monitoring of stormwater BMPs has provided a basic understanding of how efficient various BMPs are at removing urban pollutants. Most of this knowledge is limited to the older and more traditional impoundment BMP structures such as *retention* and *extended detention*. Recent regulatory requirements focused on reducing the export of non-point source pollution have given rise to new BMPs, some of

which have had very limited monitoring with which to verify removal efficiencies. The pollutant removal efficiencies provided in the stormwater regulations and this handbook are derived from the best available information. We recognize that these values are subject to change as more is learned about the practical application and maintenance of these new BMPs.

Stormwater Hotspots

Stormwater hotspots are defined as a land use or activity that generates higher concentrations of pollutants, such as sediment, hydrocarbons, trace metals, or toxicants, than are found in typical stormwater runoff. (Center for Watershed Protection, 1997). The use of some BMPs are limited on sites considered to be stormwater hotspots. This is due to the potential for the contamination of groundwater. *Infiltration facilities* are not permitted for hotspots for this reason. Further, impoundment type structures used for hotspots must have a minimum four foot separation from the groundwater table, or use an impermeable liner to prevent leachate infiltration.

Table 1-2
Stormwater Hotspots

The following land uses and activities are deemed stormwater hotspots
▪ **vehicle salvage yards and recycling facilities ***
▪ **vehicle fueling stations**
▪ **vehicle service and maintenance facilities**
▪ **vehicle and equipment cleaning facilities ***
▪ **fleet storage areas (bus, truck, etc.) ***
▪ **industrial sites (contact the Virginia Department of Environmental Quality for additional permit requirements)**
▪ **outdoor liquid container storage**
▪ **outdoor loading/unloading facilities**
▪ **public works storage areas**
▪ **facilities that generate and store hazardous materials ***
▪ **commercial nurseries**
**** indicates that the land use or activity is required to prepare a stormwater pollution prevention plan in accordance with the Virginia Pollution Discharge Elimination System program permit as required by the Virginia Department of Environmental Quality.***

Source: Center for Watershed Protection

STORMWATER MANAGEMENT PRIORITIES

Use of the performance and technology based selection criteria will frequently result in several alternative BMPs. To select among these alternatives, the following priorities are preferred by the City:

1. Reducing and/or disconnecting impervious cover
2. Infiltration with detention
3. Detention with other water quality features

Other BMPs not outlined in this Manual may be used in consultation with the Phase II Stormwater Committee. The applicant should provide supporting documentation, to include:

- Manufacturer's Specifications
- Locations of sites where the practice has been used successfully
- Computations for the specific application

• Other documentation requested by the City.

1. LOW IMPACT DEVELOPMENT

The first choice to meet the City's stormwater requirements is to incorporate "Low-Impact Development" (LID) strategies. These strategies are generally designed to replicate the pre-development hydrologic regime through a combination of small-scale, distributed practices.

Although there are some excellent national publications describing low impact development strategies, their use in this part of the country is not yet well established. In addition, the constraints upon the use of these strategies in areas with a concentration of clay type soils and steep slopes have not been fully explored. In spite of the current minimal experience with LID strategies in Piedmont communities, the City of Lynchburg does not want to discourage their application. Consequently, the Department of Community Development encourages pilot projects to apply these principals, and will potentially offer incentives to further encourage the LID strategies through case by case reviews of any development which wishes to investigate such alternatives.

Some of measures that can be incorporated into an overall LID design include:

- Green Roof Systems
- Porous Pavers
- Reduced Impervious Surfaces
- Distributed Stormwater Management Features
- Pilot BMP Measures

Design guidelines have not yet been established for these activities, but by meeting with Community Development staff prior to project submittals, implementation of these concepts will be encouraged. The incentive for application of these measures has generally involved waiving the formal quantification of the performance of the selected strategy; however, the intent of all stormwater management regulations must be met in all cases.

Each application of these strategies will be unique. These situations are intended to benefit developers who are willing to experiment with new strategies; developers selecting this route should anticipate a higher level of involvement than what would be involved for more standard stormwater management implementations. Since a significant level of experience will be gained with each application of these techniques, the level of effort required, and the level of incentive available is expected to differ for each project. The details of each project can not be expected to match the details of any preceding or succeeding effort.

2. INFILTRATION WITH DETENTION

The next preferred choice for BMPs to meet the City's stormwater requirements is to provide detention measures that also allow infiltration of stormwater into the underlying

soil. This is desirable because it provides reduction of both the peak rate and overall volume of runoff. Acceptable practices include:

- Bioretention (e.g., detention storage above the filter, with infiltration below the filter media).
- Infiltration Trenches and Roof Downspout Infiltration (e.g., gravel-filled trench with infiltration into the underlying soil).
- Manufactured BMPs with Infiltration (e.g., manufactured chambers for storage with infiltration into the underlying soil).

There are a few fundamental design guidelines with regard to practices designed to infiltrate water:

- Soils: The soil must be appropriate for infiltration. A soil study must be done in each area designated for infiltration. Soils should be investigated to a depth 4' below the bottom of the proposed facility. Soils acceptable for infiltration have infiltration rates of between 0.52 and 8.27 inches per hour, and include loam, sandy loam, and loamy sand.
- Depth to Water Table & Bedrock: There should be 2 to 4 feet from the bottom of the infiltration facility to the normal water table or bedrock, as determined by soil borings or test pits.
- Topography: Infiltration practices should not be located on slopes in excess of 20% and should not be located in fill material.
- Proximity to Buildings & Foundations: Infiltration practices should be located at least 10 to 20 feet down-slope and 100 feet upslope from building foundations without a sub-grade diversion. If infiltration will be used in an area with nearby basements, fill slopes, roads, and/or parking lots, then special precautions or studies should be undertaken to avoid problems with seepage.
- Construction Runoff: Any type of filter media used in the practice should not be put in place until the site is stabilized. If a filter is constructed before the site is stabilized, all construction runoff **MUST** then be diverted around infiltration practices. In addition, any infiltration site must be protected from compaction during construction. Construction equipment must be excluded from soil zones designed for infiltration.
- Long-Term Monitoring: All infiltration and underground detention facilities must be designed with observation wells or maintenance ports. Designs should take into account long-term inspection and maintenance requirements, and the responsible party should ensure adequate resources for future maintenance. For instance, practices constructed under turf areas will be easier to maintain than those located under parking lots.
- Site Selection: Infiltration practices are not appropriate for land uses that are considered "hot spots" (e.g., gas stations, automobile repair facilities, etc.) because of the concern for possible groundwater contamination. Infiltration practices are most practical for low to medium density development (66% impervious or less). Additional pretreatment (e.g., manufactured BMPs or vault systems that remove

sediment and other pollutants) may be able to mitigate for circumstances that don't meet these criteria.

• Mosquito Control: Infiltration practices should be designed to eliminate surface ponding within 48 hours.

3. DETENTION WITH OTHER WATER QUALITY FEATURES

In some cases, it will not be possible to provide infiltration because of site factors. In these cases, the detention measure must be combined with some other type of water quality treatment.

Examples include:

- Detention Basin with Pre-Treatment Measure such as a settling basin or forebay,
- Retention Basin with a permanent pool of water,
- Extended Detention Basin which stores runoff for a longer time than a regular detention basin and improves stormwater quality through settling,
- Water Quality Swale with either check dams to create ponding or detention storage within the subsurface media, or finally
- Manufactured BMP paired with a Detention Basin. The designer should consult with City staff prior to specifying a manufactured system to verify the system has been approved.

SPECIAL CONSIDERATIONS

There are unique aspects to every site that can not always be captured under formalized guidelines. In some circumstances, the program administer may determine that there are "other provisions for the disposition of surface water runoff (that) would equally or better serve the public interest and safety, and that such method of disposition would not adversely affect downstream properties or stream channels." In order to keep non-standard options other than low impact development open for consideration the program administrator may consider other alternative strategies.

When an applicant can present a compelling case as to why traditional treatment, in part or in whole, is impractical, the applicant can work with City staff to develop an off-site or other special solution. Some cases where this may apply include:

• Site factors, such as shallow bedrock,

• Desire to save important site features, such as significant trees, and the City and applicant concur on the strategy.

• Project sites that are less than 1% of the total drainage area at their discharge point.

• **Note: Cost to comply is not a legitimate reason for requesting special considerations.**

Impacts to adjacent parcels must be addressed and must not lead to erosion or other damaging conditions; in all cases, provisions of MS-19 of the Erosion & Sediment Control Regulations must be addressed.

The following BMPs can be considered for these situations:

- Stream Bank Restoration
- Stream Buffer Enhancement and Protection
- Repairing off-site drainage problems
- Off-Site applications of above described BMPs
- Participation in regional detention and/or BMPs

This will be case specific and at the discretion of the program administrator. The applicant must secure any required off-site easements or other property rights required for the project, or a project could be proposed on City owned right-of-way, parkland or other properties. The City may in the future develop a water quality inventory plan including a list of eligible projects, although this has currently not been established, nor is the City required to establish such an inventory.

The mitigation site should be in the same hydrologic unit basin as the development project. The initiating project owner must demonstrate that the off-site measure is providing equivalent or greater water quantity and/or quality benefits than that which would otherwise be required on-site.

BMP Guidance #1

Reduce & Disconnect Impervious Surfaces

• 1-A: Porous Parking Pavers

• 1-B: Green Roof Systems

References:

Low Impact Development Design Strategies: An Integrated Approach
Prepared by:
Prince George's County, Maryland
Department of Environmental Resource
Programs and Planning Division
9400 Peppercorn Place
Largo, Maryland 20774

The Environmental Services Division (ESD) pioneered a radically different approach to stormwater management known as Low Impact Development (LID). LID protects area streams and rivers by eliminating the need for curbs and gutters, and controlling urban stormwater runoff through the use of rain gardens, landscaping, and other means that mimic the natural conditions present before development occurs. LID reduces the need for clearing and grading, requires less impervious surface, and eliminates pipes, inlet structures and stormwater ponds. As a result, site development and maintenance costs can be reduced. For more information (publications, articles, etc.) on LID, please call ESD at (301) 883-5943.

The Georgia Stormwater Management Manual, Volume 2, Technical Handbook, First Edition, August 2001, Section 3.3.8, Modular Porous Paver Systems
http://www.georgiastormwater.com/

The Albemarle County Office Building green roof report was prepared by Richard Price, architect and green building expert from the Folsom Group, LLC, Charlottesville, Virginia, (434) 220-4666,
http://www.folsomgroup.com/pages/home.html

BMP Guidance #1
Low Impact Development

Definition:

The low-impact development (LID) approach combines a hydrologically functional site design with pollution prevention measures to compensate for land development impacts on hydrology and water quality. LID techniques can not only function to control site hydrology, but can be aesthetically pleasing.

Purpose:

The primary goal of Low Impact Development methods is to mimic the predevelopment site hydrology by using site design techniques that store, infiltrate, evaporate, and detain runoff. Use of these techniques helps to reduce off-site runoff and ensure adequate groundwater recharge. Since every aspect of site development affects the hydrologic response of the site, LID control techniques focus mainly on site hydrology. There are wide arrays of impact reduction and site design techniques that allow the site planner/engineer to create stormwater control mechanisms that function in a manner similar to that of natural control mechanisms. If LID techniques can be used for a particular site, the net result will be to more closely mimic the watersheds natural hydrologic functions or the water balance between runoff, infiltration, storage, groundwater recharge, and evapotranspiration. With the LID approach, receiving waters may experience fewer negative impacts in the volume, frequency, and quality of runoff, so as to maintain base flows and more closely approximate predevelopment runoff conditions.

The goals of low-impact development are discussed and demonstrated throughout the Prince George's County, Maryland Department of Environmental Resource's Low Impact Development Design Strategies: An Integrated Approach design manual. The list below highlights some of the main goals and principles of LID:

- Provide an improved technology for environmental protection of receiving waters.
- Provide economic incentives that encourage environmentally sensitive development.
- Develop the full potential of environmentally sensitive site planning and design.
- Encourage public education and participation in environmental protection.
- Help build communities based on environmental stewardship.
- Reduce construction and maintenance costs of the stormwater infrastructure.
- Introduce new concepts, technologies, and objectives for stormwater management such as micromanagement and multifunctional landscape features (bioretention areas, swales, and conservation areas); mimic or replicate

hydrologic functions; and maintain the ecological/biological integrity of receiving streams.

- Encourage flexibility in regulations that allows innovative engineering and site planning to promote “smart growth” principles.
- Encourage debate on the economic, environmental, and technical viability and applicability of current stormwater practices and alternative approaches.

LID is a comprehensive technology-based approach to managing urban stormwater. Stormwater is managed in small, cost-effective landscape features located on each lot rather than being conveyed and managed in large, costly pond facilities located at the bottom of drainage areas. The source control concept is quite different from conventional treatment (pipe and pond stormwater management site design). Hydrologic functions such as infiltration, frequency and volume of discharges, and groundwater recharge can be maintained with the use of reduced impervious surfaces, functional grading, open channel sections, disconnection of hydrologic flowpaths, and the use of bioretention/filtration landscape areas. LID also incorporates multifunctional site design elements into the stormwater management plan. Such alternative stormwater management practices as on-lot microstorage, functional landscaping, open drainage swales, reduced imperviousness, flatter grades, increased runoff travel time, and depression storage can be integrated into a multifunctional site design.

BMP Guidance documents within this section provides an overview of practices that virtually eliminate impervious runoff altogether. In addition, LID controls called Integrated Management Practices (IMPs) can reduce runoff by integrating stormwater controls throughout the site in many small, discrete units. IMPs are defined and described in the subsequent sections of this manual; these measures may be distributed in a small portion of each lot, near the source of impacts, virtually eliminating the need for a centralized best management practice (BMP) facility such as a stormwater management pond. By this process, a developed site can be designed as an integral part of the environment maintaining predevelopment hydrologic functions through the careful use of LID control measures.

LID designs can also significantly reduce development costs through smart site design by:

- Reducing impervious surfaces (roadways), curb, and gutters
- Decreasing the use of storm drain piping, inlet structures, and
- Eliminating or decreasing the size of large stormwater ponds.

One paradigm has typically dominated site planning and engineering. Stormwater runoff is undesirable and must be removed from the site as quickly as possible to achieve good drainage. Current site development techniques result in the creation of an extremely efficient stormwater runoff conveyance system. Every feature of a conventionally developed site is carefully planned to quickly convey runoff to a centrally located management device, usually at the end of a pipe system. Roadways, roofs, gutters, downspouts, driveways, curbs, pipes, drainage swales, parking, and grading are all typically designed to dispose of the runoff in a rapid fashion. The magnitude of

hydrologic changes (increases in volume, frequency, and rate of discharge) are amplified as natural storage is lost, the amount of impervious surfaces is increased, the time of concentration is decreased, runoff travel times are decreased, and the degree of hydraulic connection is increased. Typical conventional site design results in developments devoid of natural features that decrease travel times and that detain or infiltrate runoff. Lack of these features often adversely affects the ecosystem.

In contrast, the principal goal of low-impact development is to ensure maximum protection of the ecological integrity of the receiving waters by maintaining the watershed's hydrologic regime. This goal is accomplished by creatively designing hydrologic functions into the site design with the intent of replicating the predevelopment hydrology and thus having a significant positive effect on stream stability, habitat structure, base flows, and water quality. It is well documented that some conventional stormwater control measures can effectively remove pollutants from runoff. Water quality, however, is only one of several factors that affect aquatic biota or the ecological integrity of receiving streams. Fish macroinvertebrate surveys have demonstrated that good water quality is not the only determinant of biological integrity. In fact, the poor condition of the biological communities is usually attributed to poor habitat structure (cover, substrate, or sedimentation) or hydrology (inadequate base flow, thermal fluxes, or flashy hydrology). A conclusion that can be drawn from these studies and from direct experience is that perhaps stormwater pond technology is limited in its ability to protect the watershed and cannot reproduce predevelopment hydrological functions. With this in mind, LID can be a way to bridge this gap in protecting aquatic biota and provide good water quality as well.

BMP Guidance #1-A
Porous Pavers

The design guidance for the Georgia manual is based on an infiltration system. A concept design drawing is also provided for a filtration system that assumes that the underlying soils are not appropriate for infiltration or cannot infiltrate all of the water that moves to the subsurface. This concept includes a sand layer for filtration and an underdrain system for dewatering (drawing by Biohabitats of Virginia).

3.3.8 Modular Porous Paver Systems

Limited Application
Structural Stormwater Control

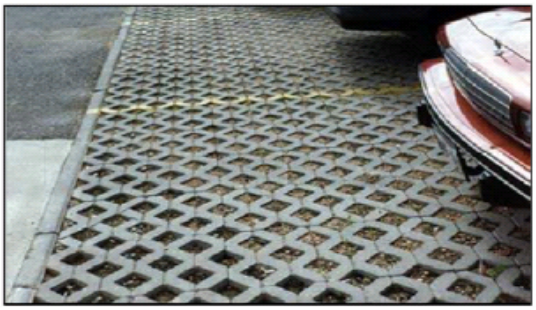

Description: A pavement surface composed of structural units with void areas that are filled with pervious materials such as sand or grass turf. Porous pavers are installed over a gravel base course that provides storage as runoff infiltrates through the porous paver system into underlying permeable soils.

REASONS FOR LIMITED USE

- Intended for low traffic areas, or for residential or overflow parking applications
- High maintenance requirements

KEY CONSIDERATIONS

- Soil infiltration rate of 0.5 in/hr or greater required
- High level of pollutant removal
- Provides reduction in runoff volume
- High cost compared to conventional pavements
- Potential for high failure rate if not adequately maintained or used in unstabilized areas
- Potential for groundwater contamination
- Available from commercial vendors

STORMWATER MANAGEMENT SUITABILITY

- ☑ Water Quality
- ✪ Channel/Flood Protection

SPECIAL APPLICATIONS

- ☐ Pretreatment
- ☑ High Density/Ultra-Urban
- ☑ Other: Overflow Parking, Driveways & related uses

Residential Subdivision Use: *Yes*

✪ in certain situations

3.3.8.1 General Description

Modular porous pavers are structural units, such as concrete blocks, bricks, or reinforced plastic mats, with regularly interdispersed void areas used to create a load-bearing pavement surface. The void areas are filled with pervious materials (gravel, sand, or grass turf) to create a system that allows for the infiltration of stormwater runoff. Porous paver systems provide water quality benefits in addition to groundwater recharge and a reduction in stormwater volume. The use of porous paver systems results in a reduction of the effective impervious area on a site.

There are many different types of modular porous pavers available from different manufacturers, including both pre-cast and mold in-place concrete blocks, concrete grids, interlocking bricks, and plastic mats with hollow rings or hexagonal cells (see Figure 3.3.8-1).

Modular porous pavers are typically placed on a gravel (stone aggregate) base course. Runoff infiltrates through the porous paver surface into the gravel base course, which acts as a storage reservoir as it exfiltrates to the underlying soil. The infiltration rate of the soils in the subgrade must be adequate to support drawdown of the entire runoff capture volume within 24 to 48 hours. Special care must be taken during construction to avoid undue compaction of the underlying soils, which could affect the soils' infiltration capability.

Modular porous paver systems are typically used in low-traffic areas such as the following types of applications:

- Parking pads in parking lots
- Overflow parking areas
- Residential driveways
- Residential street parking lanes
- Recreational trails
- Golf cart and pedestrian paths
- Emergency vehicle and fire access lanes

A major drawback is the cost and complexity of modular porous paver systems compared to conventional pavements. Porous paver systems require a very high level of construction workmanship to ensure that they function as designed. In addition, there is the difficulty and cost of rehabilitating the surfaces should they become clogged. Therefore, consideration of porous paver systems should include the construction and maintenance requirements and costs.

3.3.8.2 Pollutant Removal Capabilities

As they provide for the infiltration of stormwater runoff, porous paver systems have a high removal of both soluble and particulate pollutants, where they become trapped, absorbed or broken down in the underlying soil layers. Due to the potential for clogging, porous paver surfaces should not be used for the removal of sediment or other coarse particulate pollutants.

The following design pollutant removal rates are conservative average pollutant reduction percentages for design purposes derived from sampling data, modeling and professional judgment.

- **Total Suspended Solids – not applicable**
- **Total Phosphorus – 80%**
- **Total Nitrogen – 80%**
- **Fecal Coliform – insufficient data**
- **Heavy Metals – 90%**

3.3.8.3 Design Criteria and Specifications

- Porous paver systems can be used where the underlying in-situ subsoils have an infiltration rate of between 0.5 and 3.0 inches per hour. Therefore, porous paver systems are not suitable on sites with hydrologic group D or most group C soils, or soils with a high (>30%) clay content. During construction and preparation of the subgrade, special care must be taken to avoid compaction of the soils.

- Porous paver systems should typically be used in applications where the pavement receives tributary runoff only from impervious areas. The ratio of the contributing impervious area to the porous paver surface area should be no greater than 3:1.

- If runoff is coming from adjacent pervious areas, it is important that those areas be fully stabilized to reduce sediment loads and prevent clogging of the porous paver surface.

- Porous paver systems are not recommended on sites with a slope greater than 2%.

- A minimum of 2 feet of clearance is required between the bottom of the gravel base course and underlying bedrock or the seasonally high groundwater table.

- Porous paver systems should be sited at least 10 feet downgradient from buildings and 100 feet away from drinking water wells.

- An appropriate modular porous paver should be selected for the intended application. A minimum of 40% of the surface area should consist of open void space. If it is a load bearing surface, then the pavers should be able to support the maximum load.

- The porous paver infill is selected based upon the intended application and required infiltration rate. Masonry sand (such as ASTM C-33 concrete sand or GADOT Fine Aggregate Size No. 10) has a high infiltration rate (8 in/hr) and should be used in applications where no vegetation is desired. A sandy loam soil has a substantially lower infiltration rate (1 in/hr), but will provide for growth of a grass ground cover.

- A 1-inch top course (filter layer) of sand (ASTM C-33 concrete sand or GADOT Fine Aggregate Size No. 10) underlain by filter fabric is placed under the porous pavers and above the gravel base course.

- The gravel base course should be designed to store at a minimum the water quality volume (WQ_v). The stone aggregate used should be washed, bank-run gravel, 1.5 to 2.5 inches in diameter with a void space of about 40% (GADOT No.3 Stone). Aggregate contaminated with soil shall not be used. A porosity value (void space/total volume) of 0.32 should be used in calculations.

- The gravel base course must have a minimum depth of 9 inches. The following equation can be used to determine if the depth of the storage layer (gravel base course) needs to be greater than the minimum depth:

$$d = V / A * n$$

Where:
d = Gravel Layer Depth (feet)
V = Water Quality Volume –or– Total Volume to be Infiltrated
A = Surface Area (square feet)
n = Porosity (use n=0.32)

- The surface of the subgrade should be lined with filter fabric or an 8-inch layer of sand (ASTM C-33 concrete sand or GADOT Fine Aggregate Size No. 10) and be completely flat to promote infiltration across the entire surface.

- Porous paver system designs must use some method to convey larger storm event flows to the conveyance system. One option is to use storm drain inlets set slightly above the elevation of the pavement. This would allow for some ponding above the surface, but would accept bypass flows that are too large to be infiltrated by the porous paver system, or if the surface clogs.

- For the purpose of sizing downstream conveyance and structural control system, porous paver surface areas can be assumed to be 35% impervious. In addition, credit can taken for the runoff volume infiltrated from other impervious areas using the methodology in Section 3.1.

3.3.8.4 Inspection and Maintenance Requirements

Table 3.3.8-1 Typical Maintenance Activities for Modular Porous Paver Systems

Activity	Schedule
• Ensure that the porous paver surface is free of sediment. • Check to make sure that the system dewaters between storms.	Monthly
• Ensure that contributing area and porous paver surface are clear of debris. • Ensure that the contributing and adjacent area is stabilized and mowed, with clippings removed.	As needed, based on inspection
• Vacuum sweep porous paver surface to keep free of sediment.	Typically three to four times a year
• Inspect the surface for deterioration or spalling.	Annually
• Totally rehabilitate the porous paver system, including the top and base course, as needed.	Upon failure

3.3.8.5 Example Schematics

Figure 3.3.8-1 Examples of Modular Porous Pavers

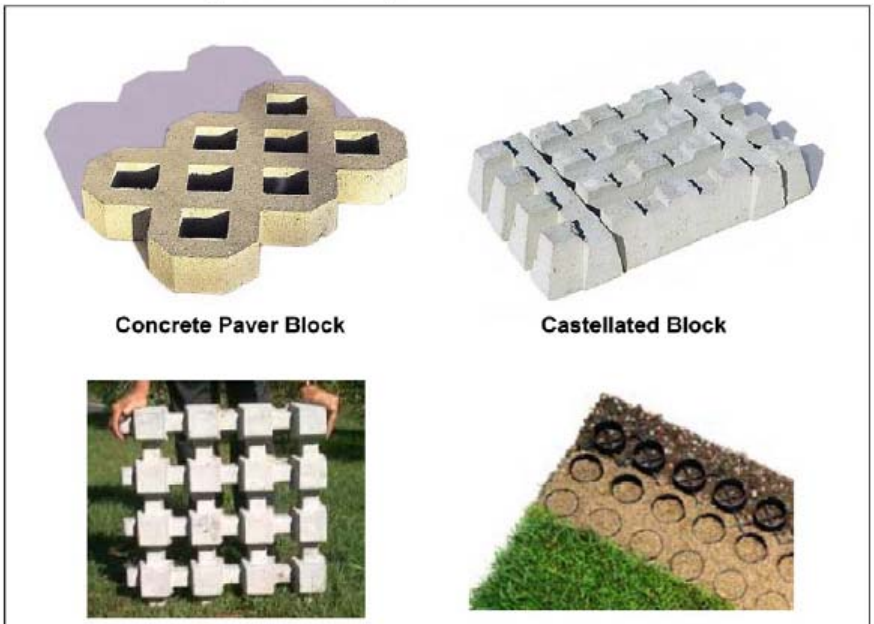

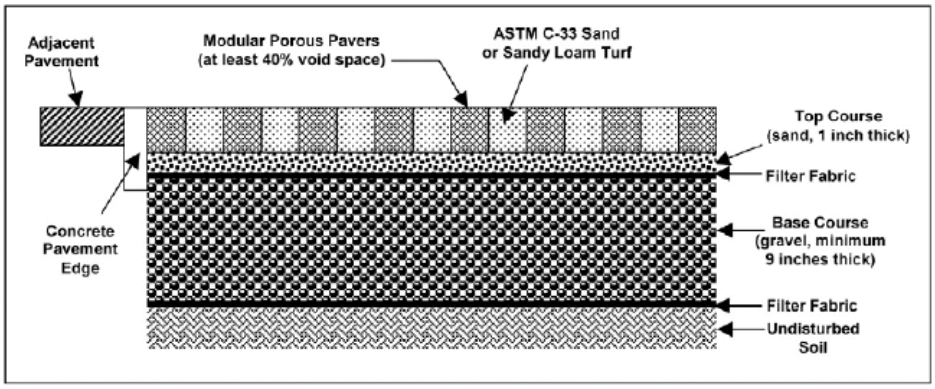

Figure 3.3.8-2 Modular Porous Paver System Section

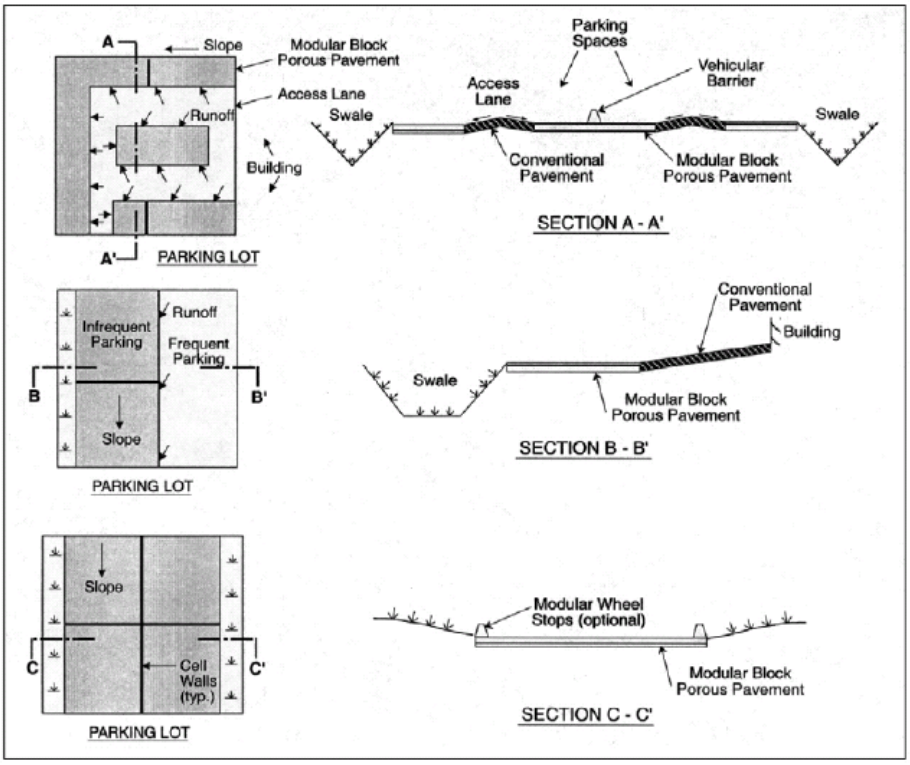

Figure 3.3.8-3 Typical Modular Porous Paver System Applications
(Source: UDFCD, 1999)

Figure 3.3.8-4 Examples of Porous Paver Surfaces
(Sources: Invisible Structures, Inc.; EP Henry Corp.)

Porous Pavers with Underdrain

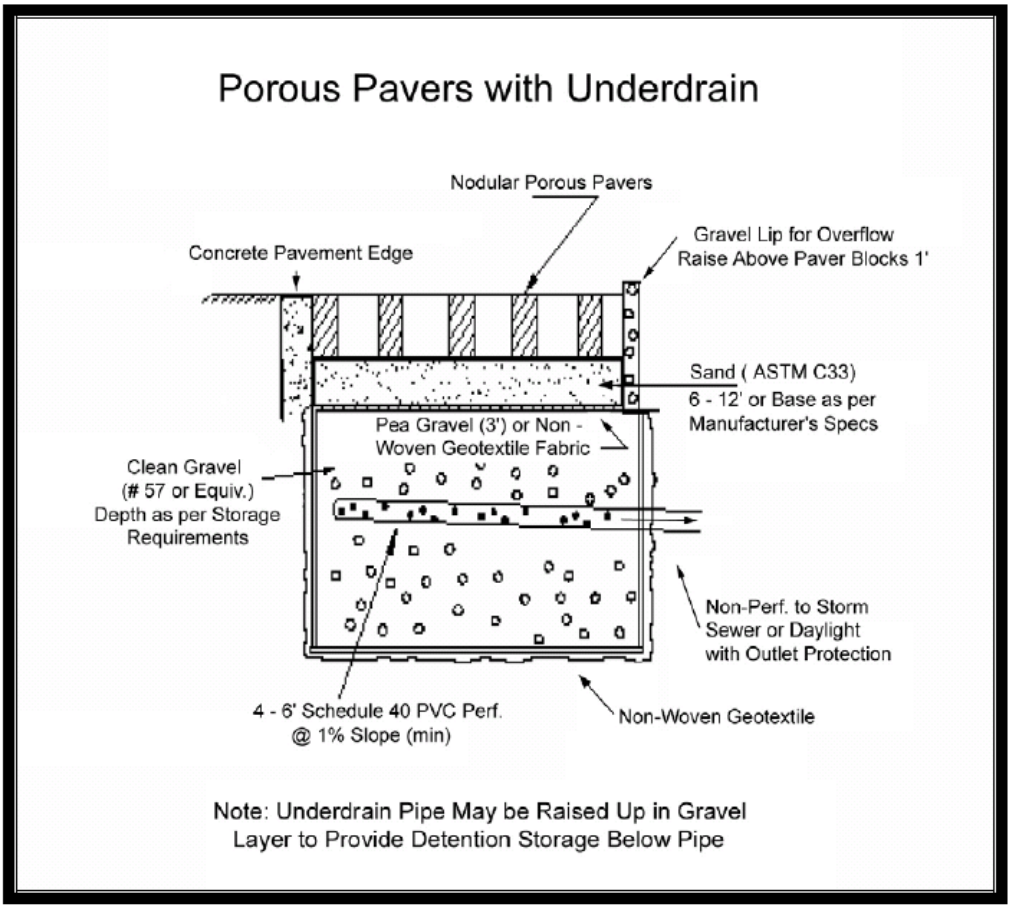

BMP Guidance #1-B
Green Roof Systems

The following report is excerpted from one prepared for the Albemarle County Office Building green roof project. It outlines the different types of green roof systems, general cost data, some environmental benefits of green roofs, and green roof vendors.

The report was prepared by Richard Price, architect and green building expert from the Folsom Group, LLC, Charlottesville, Virginia, (434) 220-4666, http://www.folsomgroup.com/pages/home.html

Feasibility study for:

Vegetated Roof for Albemarle County Office Building

Prepared for:
Albemarle County
Department of General Services
Michael Stumbaugh, Senior Project Manager

Prepared by:
The Folsom Group LLC
Charlottesville, VA

7/15/2004

1. Types of green roofs

Rooftop gardens, or green roofs, are conceptually identical to planted street-level plazas built over underground spaces, such as basements or parking garages. They are artificial environments, lacking the hydrological and organic sophistication of natural soils, and must be carefully designed to provide a viable growing medium. Although traditionally heavy and difficult to maintain, recent advances in technology have made green roofs lighter, more durable and better able to withstand the extreme climatic conditions of the rooftop.

Modern green roofs are a carefully engineered systems encompassing a waterproof membrane, thermal insulation and a multi-layered growing medium. They typically include a protection layer to prevent roots from damaging the membrane, a water retention system, a drainage layer and an engineered soil mix. They include specific details for a variety of edge and drainage conditions, and are designed to simulate the growing conditions of natural soils. They are typically relatively lightweight (starting at less than 10 lbs./ ft2), can be designed for minimal maintenance, and can be warranted for up to 15 years.

Conventional methods of growing plants on rooftops include planters and sod roofs. Planters, which can extend over an entire roof, generally consist of a roofing system topped by several inches of gravel and soil. They are typically heavy (120 lbs. / ft2 or more), subject to erosion, require irrigation and frequent maintenance and cannot be warranted as a system. Sod roofs, which have been used in indigenous architecture for centuries, are similar. A thick layer of sod is typically placed on a pitched roof, which acts as the drainage plane. Although sod roofs can take advantage of an existing root structure to minimize erosion, they suffer from many of the same drawbacks as planters.

© 2004 The Folsom Group

2. Options

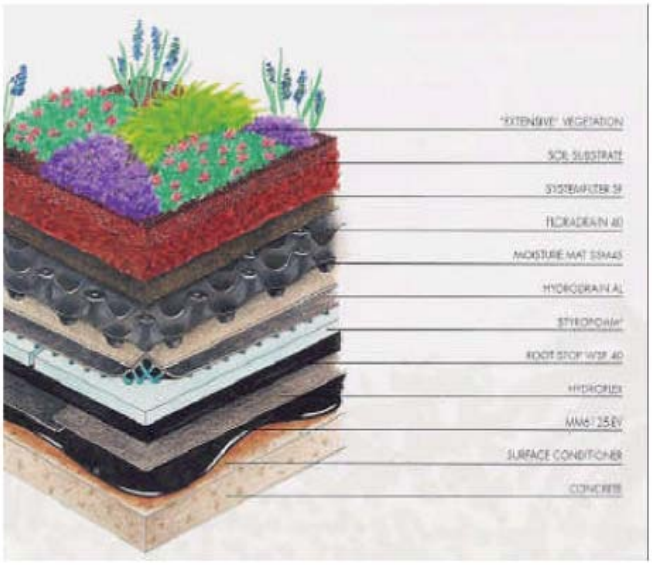

Green Roof system composition
American Hydrotech

There are several options to consider in selecting appropriate green roof systems:

- *Growing medium*. Green Roofs are generally available in both lightweight systems (called *extensive* in the industry), which have a thin (2 – 3 inch) layer of soil that will support the growth of a limited range of small plants, and in heavier systems (called *intensive*) which have 6 inches or more of soil and will support a wider variety of plants. The choice of the appropriate type is largely a function of available loading on the roof.

- *Roofing System*. The roofing membrane may be either a liquid-applied IRMA system (Inverted Roofing Membrane Assembly – meaning the insulation is on top of the waterproofing) or a high-performance roofing membrane installed over insulation (the conventional way). The liquid-applied membrane is generally thought to provide superior waterproofing and easier maintenance. Because it is applied as a liquid, it must be installed directly on the roofing deck, requiring that any existing roofing be completely removed. With certain limitations, sheet membranes may be installed over existing roofing, although manufacturers prefer that existing roofing be removed. Because they permit water migration under the waterproof layer, leaks in conventional membrane systems can also be more difficult to diagnose and repair.

© 2004 The Folsom Group

- *Installation method*. Traditionally, most green roof systems are designed for field assembly: materials are brought to the site and custom built on the rooftop. More recently, modular systems have become available, making installation simpler. These include tray systems and mat systems, both of which can be pre-grown and shipped to the project site for final installation.

- *Suppliers and warranty*. There are several vegetated roof systems available in the US market, with differing methods of providing materials and warranties. In general, the plant materials themselves are warranted for only one growing season.
    - *Single source*. Some companies offer turnkey green roof systems, which include the roofing membrane and the vegetated roof overburden. These include American HydroTech, Garland Roofing and Sopranature. Because they are from single sources, the entire green roof system can be warranted, up to 15 years.
    - *Mix and match*. Other systems are provided by roofing material suppliers, and can be installed over any compatible roofing membrane. These companies include Green Grid and Envirotech. When using this approach, care must be taken to assure that the overburden does not void the warranty of the roofing system, and that the roof warranty includes removal and re-installation of the green roof overburden.
    - *Green roof specialist*. A third alternative is to engage a green roof consultant, who will design and bid out the roofing system components. We are aware of only one company, Roofscapes, Inc, that takes this approach.

- *Maintenance* issues must also be considered.
    - *Leak repair*. Membrane roofing does occasionally begin to leak, especially in the early months of an installation as the system stabilizes. Modular systems are obviously simpler to remove and replace, although most vegetated roof systems include remove-and-replacement of the overburden when warranty repair is needed.
    - *Plant materials* are generally selected that will thrive and reproduce in the artificial rooftop environment. Watering during the establishment period (generally the first year) is required. Some annual maintenance to remove dead materials and interplant where needed is generally required as well. After the first couple of years, most systems become stable enough to preclude the need for further maintenance.

© 2004 The Folsom Group

3. Costs and Benefits of green roofs

Green roof system installation
Chicago City Hall

Manufacturers generally quote the installed cost of the vegetated overburden at $15 – 20 / sf for job-built intensive systems, $10 – 15 / sf for pre-planted modular systems, and start at $20 / sf for more extensive applications. A relatively new system marketed in the US under the name Envirotech uses an integrated membrane system available for under $10 per sf.

Structural analysis of the Albemarle County Office Building by Dunbar Milby Williams Pittman & Vaughan PC indicates that the roof structure will not accommodate additional loading. However, because the current roof is ballasted, a green roof system can safely be used that does not exceed the loading of the ballast (when saturated). The weight of the current ballast is estimated at 10 – 12 lbs / sf. This will permit the use of an extensive roof system with a soil medium of 2 – 3 inches.

The additional costs of vegetated roof systems are generally offset by greatly extended life of the roofing membrane, reduced energy consumption and the corresponding ability to reduce mechanical plant size. Various studies suggest that green roofs have a reasonable payback (10 years or less) when used on new construction, but may be less attractive when undertaken as a roof replacement project. The secondary benefits of using green roofs, however, are as compelling as they are difficult to quantify. In addition to the potential to mitigate the urban heat island effect, benefits include additional habitat for wildlife, carbon sequestration, the potential to use evapo-transpiration to assist in cooling the building, capture of airborne particulates and stormwater retention and cleansing.

© 2004 The Folsom Group

Several European studies have confirmed the one primary benefit of using a green roof system is the greatly increased useful life of the roofing membrane. The British Board of Adjustment, for example, which rates the life expectancy of various building materials, rates the longevity of protected, liquid-applied membranes, such as that used in the HydroTech system, as "the life of the building." Green roofs, in fact, protect membranes from the three primary causes of roofing degradation: accidental rupture, wide thermal swings, and prolonged exposure to ultraviolet light. In practical terms, 20 years is considered an average lifetime for an exposed bituminous roof, while green roof systems can be expected to last 40 years or more.

© 2004 The Folsom Group

4. Environmental Benefits

Infrared satellite image of Sacramento, CA
NASA Global Hydrology and Climate Center

Studies indicate that widespread application of green roof technology has the potential to mitigate the urban heat island effect, the buildup of heat that results from the concentration of heat absorbing surfaces, like pavement and rooftops, in urban areas. This global temperature reduction in a metropolitan area, when coupled with the expected reduction in energy consumption in buildings, would be significant enough to offset the need for several small fossil fuel generating plants required for cooling. When coupled with a strategy to increase the use of non-polluting, renewable energy sources, such as photovoltaics, wind generation and geothermal heating, the use of green roofs can be seen as an important part of a long-term strategy to reduce global warming and airborne emissions that result from fossil fuel consumption.

Scientists at Lawrence Berkley Labs point out, however, that many of these same benefits can be obtained using other technologies that are less costly than green roof systems. They rightly suggest that increased insulation, high albedo (heat-reflecting) coatings, and the use of rooftop misting can provide roughly equivalent energy savings with a much smaller initial investment. Green roofs, however, provide a number of benefits that the other technologies do not offer, and which should be taken into consideration when making policy and investment decisions.

Perhaps the most compelling secondary benefit is stormwater management. Green roofs are generally designed to hold at least a one-inch storm event, which comprises around 70% of all precipitation in most temperate areas. Rather than being collected in pipes and discharged directly into the municipal storm system, green roofs deal with stormwater in much the same way the natural ecosystem does. The water is filtered and cleansed by the soil, and much of it is transpired into the air. The small amount of water that does reach the stormwater system is generally

© 2004 The Folsom Group

cleaner and is released more slowly than is the case with conventional piped conveyance systems. Widespread use of green roofs would be expected to improve surface water quality, reduce the stress on the existing storm water system, and help mitigate the peak flow conditions that lead to flooding. Conventional rooftop retention does not offer improvements in water quality, and may in fact lead to increased contamination as stormwater remains in prolonged contact with roofing membranes. This is especially of concern with high-albedo coatings, which generally consist of inorganic polymers and heavy metals.

Green roofs are living ecosystems, albeit somewhat artificial ones. They provide habitat where none now exists, and can be expected to foster the return of insects, butterflies and migratory birds. The plant materials both shade the roof surface and evapotranspire moisture, in effect providing cooling powered by the sun. There is also empirical evidence that green roofs retain airborne particulates in the moist microclimate, helping to reduce atmospheric particulate matter.

Finally, green roofs are a compelling building material. Their mass and variety of densities makes them good acoustic insulators, while the fragmented surface condition presented by the plants should help to minimize acoustic reflection that exacerbates urban noise pollution. They also have the potential to be low maintenance and self-replicating, both highly desirable (and unusual) traits for building materials. And green roofs are an attractive alternative to the relentless sea of gray that characterizes so much of our urban environment.

© 2004 The Folsom Group

5. Available systems

The following manufacturers market vegetated roof systems in the U.S.:

American Hydrotech
303 East Ohio Street, Chicago, IL 60611 (312) 337-4998
www.hydrotechusa.com/garden.html

Hydrotech markets a proprietary system, 'Garden Roof' using materials developed by the German company ZinCo. The system is installed over an IRMA system using Hydrotech's liquid-applied waterproofing membrane. Liquid applied membranes are generally suitable only on concrete or other rigid, smooth decks.

Envirotech
Mike Perry, Building Logics
1033 Downshire Chase, Virginia Beach, VA 23452 (757) 340-4201
www.buildinglogics.com

Building Logics markets green roof systems using materials developed by FAMOS GmbH of Germany.

Green Grid
Sandra McCullough, Weston Solutions, Inc
3 First National Plaza, Chicago, IL 60602 (312) 424-3306
www.greengridroofs.com

Green Grid is a modular roof system, developed by the country's largest roofing materials supplier, ABC Roofing. It is marketed in this country by Weston Solutions, Inc.

Roofscapes, Inc
Charlie Miller
7114 McCallum Street, Philadelphia, PA 19119 (215) 247 8784
www.roofscapes.com

Roofscapes designs and installs custom green roof systems using materials developed by Optima of Germany. The roof systems are generally installed over single-ply roofing membranes above building insulation.

Soprema
Rob Bushnell
Unit 1, 10097 Tyler Place, Ijamsville, MD 21754 (301) 270 0522
www.soprema.com

Soprema USA is a subsidiary of a French roofing manufacturer which markets a proprietary green roof system called Sopranature. The system is installed over a single-ply membrane and insulation.

© 2004 The Folsom Group

6. Recommendations and project budget

Because the Albemarle County project will be used as a demonstration, The Folsom Group recommends the use of multiple vegetated roof systems in different areas of the roof. This will allow some comparison of the systems available, and demonstrate the range of systems available.

For reasons of price and performance, we recommend the use of these two systems:

Main Roof: Envirotech Famogreen Ret CU P4.

This integrated system of roof membrane and vegetated roof overburden is available for an upcharge of approximately $4 - 5 / sf over the cost of the membrane, $15 – 20 / sf as a complete system. If purchased as a system, it is by far the most cost effective system available, and can demonstrate the feasibility of wide-spread applications on larger roof areas. The roofing warranty includes removal and replacement of the overburden if roof repair is needed.

Small roof areas: Green Grid

The modular system is ideal for areas requiring ease of removal and where pre-planting may be advantageous. This system is available for approximately $10 – 12 / sf when installed over a high-quality roofing membrane.

© 2004 The Folsom Group

BMP Guidance #2

Detention with Water Quality by Infiltration

- **2-A: Bioretention and Biofilters**
- **2-B: Infiltration Trench**
- **2-C: Roof Downspout System**
- **2-D: Plastic Chamber Systems**
- **2-E: Filterra™**
- **2-F: Raintank™ Systems**

References:

The Virginia Stormwater Management Handbook, First Edition, 1999, Volume 1, Minimum Standard 3.10, Infiltration Practices.
http://www.dcr.virginia.gov/sw/stormwat.htm

Editors Note for Manufactured Best Management Practice systems

The City of Lynchburg does not endorse one proprietary system versus another. Applicants may contact various vendors and discuss the applicability of these products for specific sites. The Virginia Department of Conservation & Recreation (DCR) has published Technical Bulletins concerning several types of manufactured systems – plastic chamber systems (Technical Bulletin #3) and Filterra (Technical Bulletin #6). These are included in this section. However, their inclusion does not express a preference for these systems versus others that are commercially available. The link for the Technical Bulletins are at:
http://www.dcr.virginia.gov/sw/docs/swm/tecbltn3.PDF
http://www.dcr.state.va.us/sw/docs/tecbltn6.pdf

This section also includes several diagrams from Atlantis Water Management showing how manufactured systems can be used in a variety of applications, including infiltration, and in combination with bioretention. These diagrams are provided by ACF Environmental, Inc (www.acfenvironmental.com). Again, the inclusion of these diagrams does not express a preference for these particular products.

BMP Guidance #2
General Infiltration Practices

Definition

Infiltration facilities temporarily impound stormwater runoff and discharge it via infiltration into the surrounding soil.

Purpose

Infiltration facilities are primarily used for water quality enhancement. Infiltration practices that capture all of the runoff from the "first flush" (i.e., the water quality volume) may utilize dry storage above the water quality volume to provide sufficient reductions in the 1 or 2-year peak discharge as required. The "water quality volume" is defined by the Virginia Stormwater Management Regulations as "the volume equal to the first 1/2 inch of runoff multiplied by the impervious surface of the land development project" (4VAC3-20-10).

Infiltration practices are appealing in that they help to reverse the hydrologic consequences of urban development by reducing peak discharge and providing groundwater recharge.

Figure 1.1

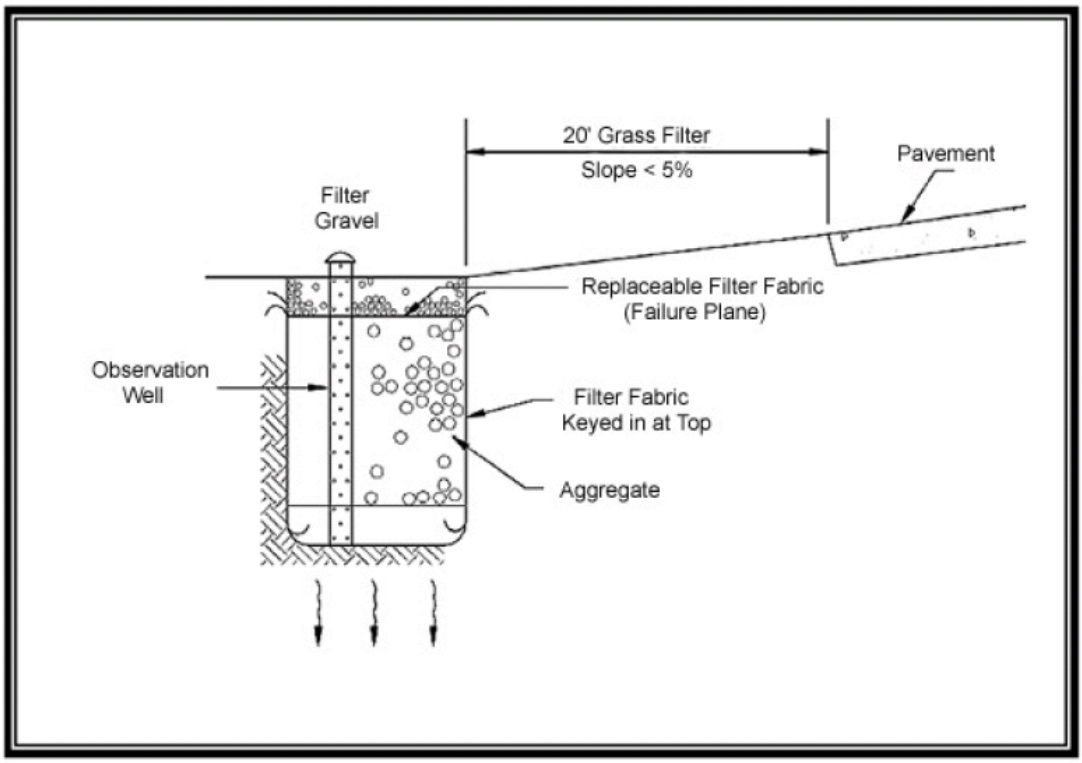

Infiltration Trench – Section

Conditions Where Practice Applies

Infiltration facilities are suitable for use where the subsoil is sufficiently permeable to provide a reasonable rate of infiltration and where the water table is sufficiently lower than the design depth of the facility to prevent pollution of the groundwater.

Infiltration facilities are subject to clogging and, therefore, are not recommended for areas where sediment, grease, or oil loadings may be high. Such areas include roadways, parking lots, car service facilities, etc. To increase the life expectancy of an infiltration facility, a pretreatment facility such as a settling basin or "cell", or additional BMP in series should be used to remove sediments or other substances from the stormwater runoff **before** it enters the infiltration facility.

Planning Consideration

The following planning considerations are provided for infiltration practices overall. More specific considerations that may be applicable are presented with each infiltration practice.

Site Conditions

In the past, many designs were accepted based on soils information compiled from available data, such as SCS soil surveys. While these sources may be appropriate for a pre-engineering feasibility study, final design and acceptance should be based on an actual subsurface analysis and permeability tests.

Site-specific soil borings should be undertaken to support the use of infiltration practices. The suitability of the soil for use with the desired infiltration practice can be determined from the soil boring analysis. In general, the following information should be included in a site-specific subsurface or geotechnical study:

1. Soil permeability

The soil types within the subsoil profile, extending a minimum of 4 feet below the bottom of the facility, should be identified to verify the **infiltration rate** or **permeability** of the soil. The infiltration rate, or permeability, measured in inches per hour, is the rate at which water passes through the soil profile during saturated conditions. Minimum and maximum infiltration rates establish the suitability of various soil textural classes for infiltration. Each soil texture and corresponding hydrologic properties within the soil profile are identified through analysis of a gradation test of the soil boring material. **Soil textures acceptable for use with infiltration systems include those with infiltration rates between 0.52 inches per hour and 8.27 inches per hour, and include loam, sandy loam, and loamy sand**.

Soils that have poor percolation capabilities or excessively drained soils, such as sand, should not be used for infiltration purposes. The soil textures presented in **Table 1.1** correspond to the soil textures of the U.S. Department of Agriculture (USDA) Textural Triangle. Note that actual permeability tests may indicate infiltration rates different from those in **Table 1.1.**

Predicting the ex-filtration of water from an infiltration facility is difficult, especially over an extended period, such as the desired life expectancy of the facility. A factor of safety should be applied in the design to ensure that the facility

is sized to function even when partially clogged. (This is discussed further in the **General Design Criteria** presented later in this section.)

Table 1.1

Texture Class	Effective Water Capacity (C_w) (inch per inch)	Minimum Infiltration Rate (f) (inch per hour)	Hydrologic Soil Grouping
Sand	0.35	8.27	A
Loamy Sand	0.31	2.41	A
Sandy Loam	0.25	1.02	B
Loam	0.19	0.52	B
Silt Loam	0.17	0.27	C
Sandy Clay Loam	0.14	0.17	C
Clay Loam	0.14	0.09	D
Silty Clay Loam	0.11	0.06	D
Sandy Clay	0.09	0.05	D
Silty Clay	0.09	0.04	D
Clay	0.08	0.02	D

Hydrologic Soil Properties Classified by Soil Texture

2. Depth to the seasonal high groundwater table and bedrock.

Typically, infiltration facilities are not recommended in areas with a high groundwater table due to the inability of the soil to adequately filter out pollutants before the stormwater enters the water table. A distance of **2** to **4** feet is required between the bottom of an infiltration facility and the existing water table or bedrock. Similarly, infiltration facilities are not recommended for areas where karst topography is present (in Virginia, west of the Blue Ridge Mountains) due to the possibility of causing subsurface collapse and sinkhole formation.

Determination of the seasonal high groundwater table elevation should be given a high priority because flooding of an infiltration facility will render it inoperable during periods of high precipitation.

Selecting the optimum depth of an infiltration facility is a process of analyzing constraints. It includes seeking those soil horizons, which have a permeability rate that will allow the structure to empty within 48 hours after a design storm event. The design elements of this process are covered in **General Design Criteria**, presented later in this section.

3. Topographic conditions

The topographic conditions of a development site represent feasibility factors that should be examined before designing an infiltration system. These factors include the slope of the land, the nature of the soil (natural or fill), and the proximity of building foundations and water supply wells.

Infiltration practices should be located in areas in which the slope does not exceed 20% (5H: 1V). Using infiltration practices on a steep grade increases the chance of water seepage from the sub-grade to the lower areas of the site and reduces the amount that infiltrates.

Developments occurring on sloping and rolling sites often require extensive cut and fill operations. The use of stormwater management infiltration systems on fill material is not recommended due to the possibility of creating an unstable sub-grade. Fill areas can be very susceptible to slope failure due to slippage along the interface of the in-situ and fill material. This condition could be aggravated if the fill material were allowed to become saturated through the use of infiltration practices.

Nearby building foundations should be at least 10 feet up-gradient of the infiltration system to prevent the possibility of flooding basements. Proximity to septic systems is also a concern and local health officials should be consulted for guidance on minimum setbacks. Additionally, the location of infiltration practices should be a minimum of 100 feet from any water supply well where the runoff is from commercial or industrial impervious parking areas.

Sediment Control

Provisions for long-term sediment control, or pretreatment of the stormwater runoff, must be incorporated into the design, along with precautions taken during onsite construction activities. Advance consideration should be given to the potential impacts that construction techniques, work sequence, and equipment could have on the future maintenance requirements of the BMP. Serious maintenance problems can be averted, or reduced, by the adoption of relatively simple measures during construction.

1. Construction Runoff

Infiltration facilities built prior to the completion of site construction activities often become choked with sediment, rendering them inoperable from the outset. Simply providing inlet protection or some other filtering mechanism during site construction may not adequately control the sediment. One large storm can overload protection devices and completely clog the infiltration facility.

The definition of the term “adequately stabilized” when describing the contributing drainage area of an infiltration BMP is critical to the success of the facility. An approved erosion and sediment control plan will specify various devices for trapping sediment during construction, such as silt fences, diversions, sediment traps, etc. It will also specify measures and provide specifications for site stabilization. Following construction activities, the temporary sediment control measures should be removed at the direction of the erosion control inspector when, at a minimum, stabilization measures, such as seed and mulch, are in place. This does not mean, however, that stabilization has occurred. Often, it may take one or more full growing seasons before the pervious areas are fully stabilized, and the construction-related sediment load is controlled. **Therefore, provisions to bypass the stormwater around, or away from, the infiltration facility during the stabilization period should be implemented.**

2. Urban Runoff

A fully stabilized site will generate a particulate pollutant load resulting from natural erosion, lawn and garden debris such as leaves, grass clippings, mulch, roadway sand, etc. Various measures can be incorporated into the design to protect the facility and facilitate regular maintenance.

Urban and ultra-urban development projects are usually limited to the use of infiltration trenches, which include **dry wells**, **porous pavement**, and **roof downspout systems**. Runoff to any infiltration trench must be filtered to remove sediment prior to entering the structure.

Runoff to an infiltration trench is usually **concentrated input**, which is conveyed by gutters, inlets, or pipes, and enters the facility at one or more points. Sediment control devices for concentrated input include in-line structures such as water quality inlets, sediment collection sumps or similar structures, provided there is an assured means of regular inspection and maintenance. Any pretreatment BMP that allows sediment- laden water to enter the infiltration facility upon failure of the pretreatment BMP should be avoided. Ideally, a clogged or failed pretreatment BMP should create a noticeable amount of overland flow bypassing the infiltration facility, which indicates that it is time to maintain the pretreatment device. Prompt maintenance of the pretreatment BMP will ensure that the infiltration facility remains intact.

Any sediment collection structure must be adequate to handle the expected flows. Therefore, filter systems should be designed with an additional capacity to account for eventual or partial clogging.

Runoff to an infiltration BMP may also be in the form of **sheet flow**, entering the top of the storage reservoir over a wide area. **Figure 1.1** portrays one such infiltration trench where overland sheet flow is directed across a gently sloping grassed filter strip to the surface of the infiltration trench. The grassed filter strip is the primary pretreatment

control and must be at least **20 feet wide** and have a **5% slope or less** to be effective. The entry berm must be parallel to the contour to maintain uniform flow to the trench.
The choice of vegetative cover should be made with respect to its tolerance to water, growth rate, climatic preference, stabilization capacity, and maintenance considerations. Refer to the VESCH DCR, 1992, and any local ordinances for specific vegetative recommendations. It is essential that a complete cover of dense turf be established **BEFORE** stormwater flows are allowed to enter the facility.

Figure 1.2
Concentrated Input Pretreatment

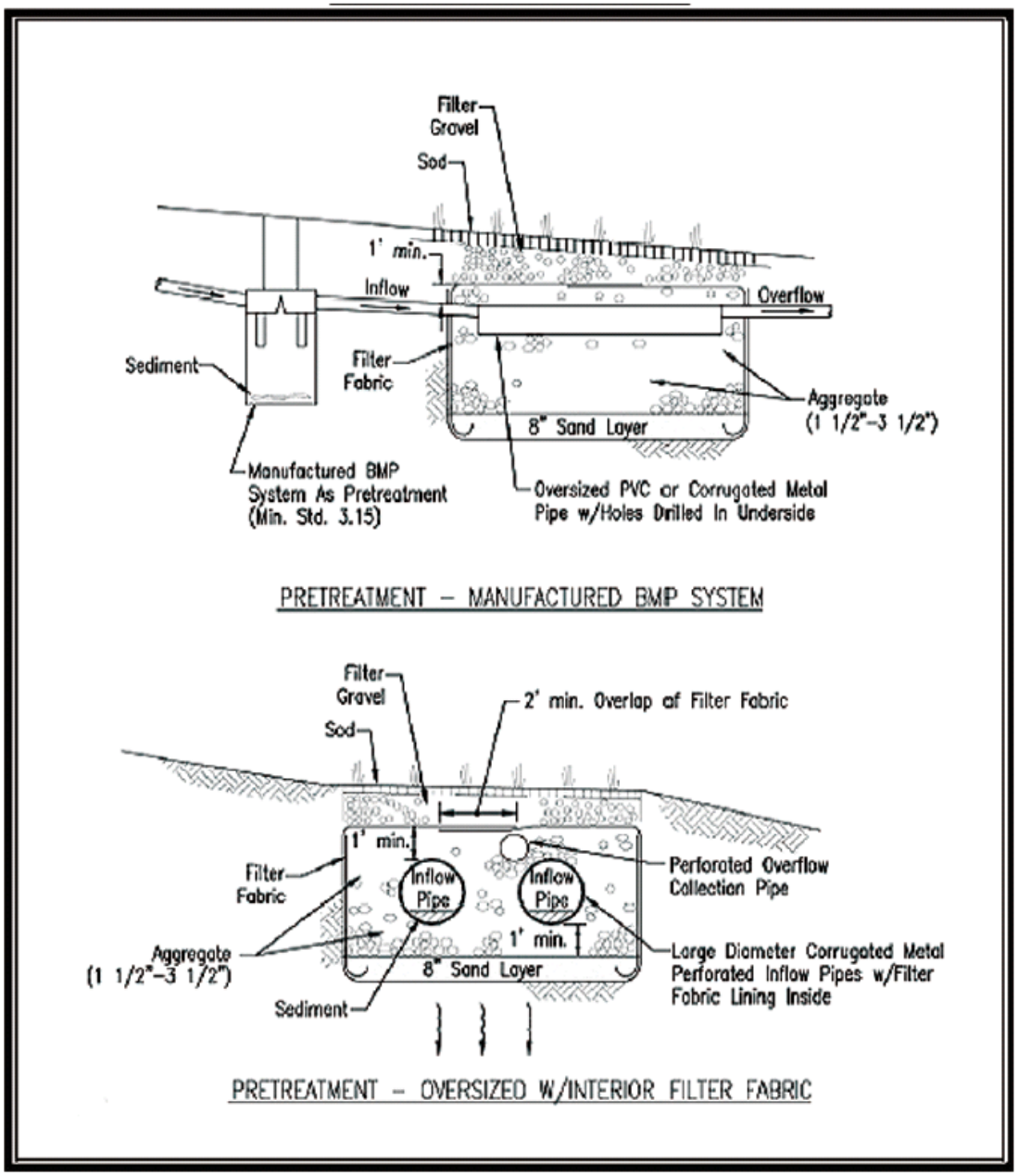

Figure 1.3

Observation Well

Maintenance

The maintenance requirements for a selected infiltration practice must be considered during the planning and design of the facility. Surface facilities such as basins and swales can be visually inspected and easily maintained. The surface of an infiltration trench or dry well can also be visually inspected and maintained if they are constructed at grade. Since their subsurface storage areas cannot be inspected above ground, **observation wells must be required** (refer to **Figure 1.3**). Maintenance of the subsurface storage area, however, short of excavating the facility, is very difficult. Therefore, many landowners, developers and local program administrators have been discouraged from using infiltration facilities.

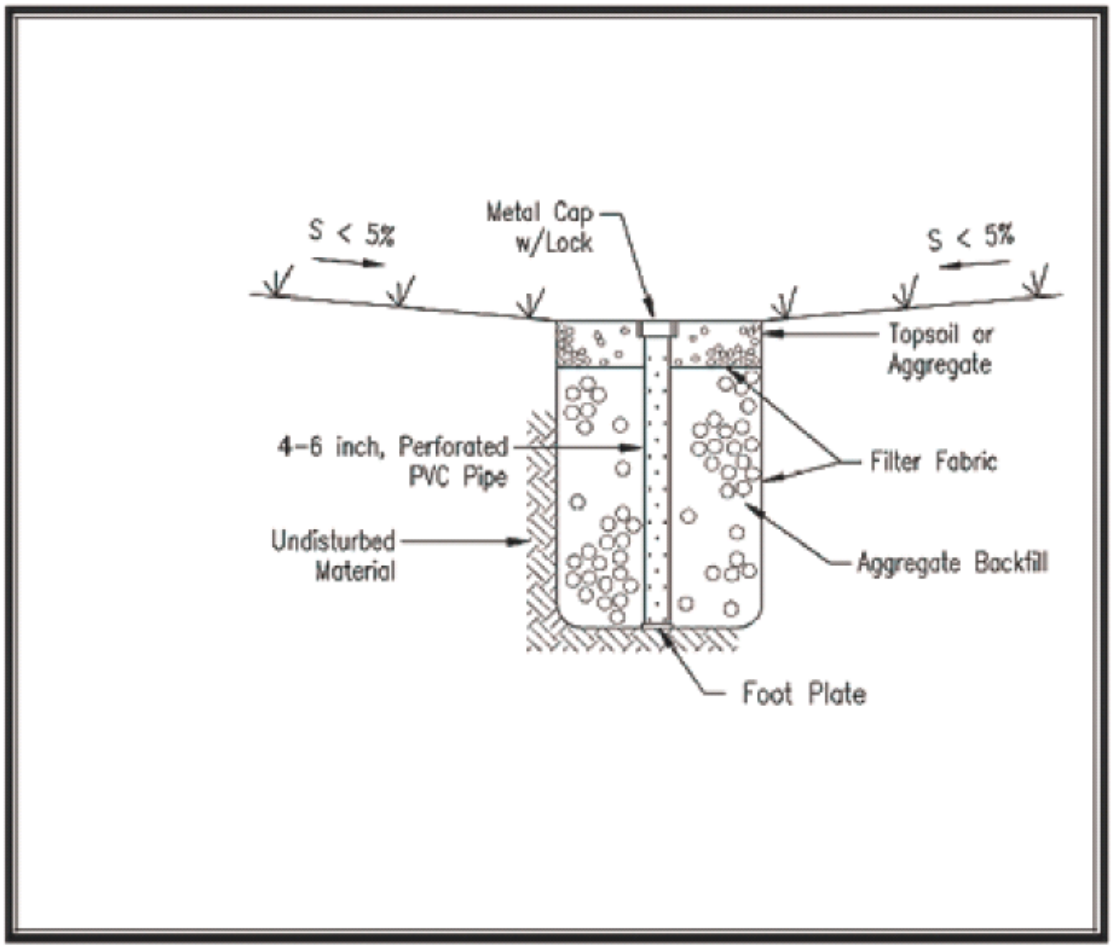

General Design

The purpose of this section is to provide recommendations and minimum criteria for the design of infiltration practices intended to comply with the runoff quality requirements of the Virginia Stormwater Management program.

The types of infiltration facilities that are recognized for stormwater management purposes are **infiltration basins** and **infiltration trenches**. The design, construction, and maintenance criteria for infiltration trenches are also applied to the design of the storage volume for **porous pavement** and **roof downspout systems** (or dry wells).

Sizing Procedure

A Darcy's Law approach is recommended for sizing water quality infiltration BMPs. This will assume that the drain time of the facility is controlled by one-dimensional flow through the bottom surface.

$$Q = f\ I\ SA$$

where: Q = rate of ex-filtration into soil, cfs
f = infiltration rate of the soil in ft/hr
I = hydraulic gradient
SA = bottom surface area of facility in ft^2

1. Infiltration Rate –

Over the life of an infiltration facility, the rate of infiltration into the soil, f, may gradually decrease due to clogging of the surface layer of soil. A safety factor should be built into the design of the facility to allow for future clogging. **A safety factor of 2** should be applied to the infiltration rate determined from the soil analysis. The design soil infiltration rate, f_d, therefore, is equal to one-half of the actual rate:

$$f_d = 0.5f$$

2. Hydraulic Gradient –

In areas with a shallow water table or impermeable layer, the hydraulic gradient may have an impact on the allowable design depth. The hydraulic gradient is given by the equation:

$$I = \left(\frac{h + L}{L}\right)$$

where: I = hydraulic gradient
h = height of the water column over the infiltrating surface, ft.
L = distance from the top surface of the BMP to the water table, bedrock, impermeable layer, or other soil layer of a different infiltration rate, ft.

The hydraulic gradient will be assumed to be equal to one in all infiltration designs since the gradient approaches unity as the facility drains. Therefore,

$$I=1$$

3. Maximum Ponding or Storage Time, T_{max} –

A water quality infiltration facility should be designed with a maximum drain time, T_{max} , of 48 hours for the total volume.

The maximum drain time, along with the minimum design soil infiltration rate, f_d , as verified through a subsurface investigation and analysis, **will dictate the maximum allowable design depth**, d_{max}, of the structure. The maximum depth for an infiltration basin and trench is covered in the following minimum standards.

BMP Guidance #2-A
Bioretention and Biofilters

The two terms, bioretention and biofilter, are often used interchangeably. For the purposes of this manual, the terms are defined as follows:

Bioretention systems are designed to filter water through various media – plants, mulch, soil – and then infiltrate it into the ground. As such, bioretention cells do not have underdrain systems OR the underdrain pipes are placed near the top of a deeper gravel layer to create temporary sump storage.

Biofilters include the filtering components of bioretention, but do not rely on infiltration for water to exit the facility. Biofilters include underdrain systems, and can be used in areas where the underlying soils are not conducive to infiltration.

Most of the details in this section are for biofilters, due to the general nature of soils in the Piedmont area. However, a detail is included for a bioretention system and these are encouraged where the soils conditions are suitable.

The use of bioretention/biofilters is a versatile stormwater management strategy that is usually space-efficient and aesthetically preferable to traditional basins. They can work well for small commercial settings, residential applications, and as retrofits to erosion control basins and silt traps. The following requirements apply to the design of biofilters, in addition to the design guidelines in the Virginia Stormwater Management Handbook.

1. Biofilters will be designed to capture and filter the first-flush (first half inch) of runoff from impervious surfaces. Space limitations generally preclude designs that capture and treat runoff from large storm events. Therefore, the design must include provisions to allow the by-pass of larger flows. This may be accomplished by allowing a water depth of 6 to 12 inches over the surface of the biofilter with the higher water levels overflowing to an inlet structure in the curb or other suitable and stable discharge.
2. Biofilters should be sized based on the impervious drainage area draining into each biofilter, with the biofilter surface area equal to 5% of the impervious drainage area. The biofilter surface area is only the area of the filter itself and does not include adjacent side slopes.
3. All pipe and culvert discharges into biofilters will require outlet protection and energy dissipators to distribute concentrated water into the biofilter.
4. Curb cut inlets into biofilters require appropriately sized stone or other erosion protection to prevent erosion at the curb openings. The top of the stone will be approximately 4 inches below the pavement height to prevent clogging of the curb cuts with debris and vegetation. The impervious area draining to the curb cuts will be graded so as to: evenly distribute water into and across the biofilter surface; prevent runoff from by-passing the biofilter; and to prevent the concentration of runoff at the outlet structure.
5. The crest of outlet structures (if used within the biofilter to allow the by-pass of large storm flows) will be 6” to 12” higher than the biofilter elevation. They will be

designed to assure capture of the overflow and to prevent erosion around the structure. This may be accomplished by ramping the top of the soil layer up to the crest of the structure or placing appropriately sized stone around the structure. In addition, the embankment around the biofilter must be high enough so that peak discharge from the 10-year storm is confined without overtopping the embankment.

6. The biofilter soil mix will be "Luck Bio-filter Mix" or a tested equivalent approved by the Plan Approving Authority.

7. In lieu of filter fabric, 3" of pea gravel will be used between the soil filter media and the underdrain stone. Alternately, the design may incorporate a permeable non-woven geotextile fabric designed for this type of purpose.

8. Biofilter under-drain pipe will be PVC - Schedule 40 or equivalent, unless otherwise specified by City staff. Perforations will be ¼" holes, 6" to 8" on-center and in a staggered pattern around the pipe, or equivalent approved by the City Engineer. Alternately, a 20-slot well screen may be substituted for the perforated pipe.

9. Biofilter designs will include a plan view detail, profile detail, appropriate cross-sections and elevations shown for the:

- Top of curb (if applicable)
- Top of the embankments
- Tops and inverts of the inlet/outlet structures
- Top of the soil mix
- Top of the under-drain layer
- Cleanouts

10. Biofilter planting plan may be customized to the site, but in general accord with the one of the following categories:

- Mulch Bed – 3" of fine-shredded hardwood mulch, with a variety of tree, shrub, and ground cover species (3 species minimum; the planting plan shall include sufficient ground cover to achieve the goal of covering the surface area of the filter within a short period of time).
- Wildflower/native grass, planted in plugs or seeded, with heavy straw mulch and EC-2 matting and a minimum of 3 tree and shrub species.
- Sod cover with a minimum of 3 tree and shrub species.

11. Plants for the biofilter will be selected from the plant list in Section 3-11 of the Virginia Stormwater Management Handbook. This list is not comprehensive with regard to ground covers and herbaceous plants. Therefore, the designer shall supplement the herbaceous layer from other plant lists that are suitable for "wet meadow" or riparian environments. The biofilter plan will include a planting plan and schedule showing the location, species, type, size of stock, and planting notes. This may also be a component of a landscape plan.

12. Biofilters must not be installed until the site is determined to be adequately stabilized by the erosion control inspectors.

13. The inspector must approve the under-drain installation and soil mix prior to backfilling the biofilter, as well as the completed installation. Therefore the following note will be added to the stormwater/BMP plan:
Contractor shall contact the City inspector 24 hours prior to backfilling the biofilter and request an inspection and approval of the under-drain installation and the soil mix.

The following standard details are provided for biofilters and bioretention areas:
Figure # 2.1
Standard Biofilter Detail

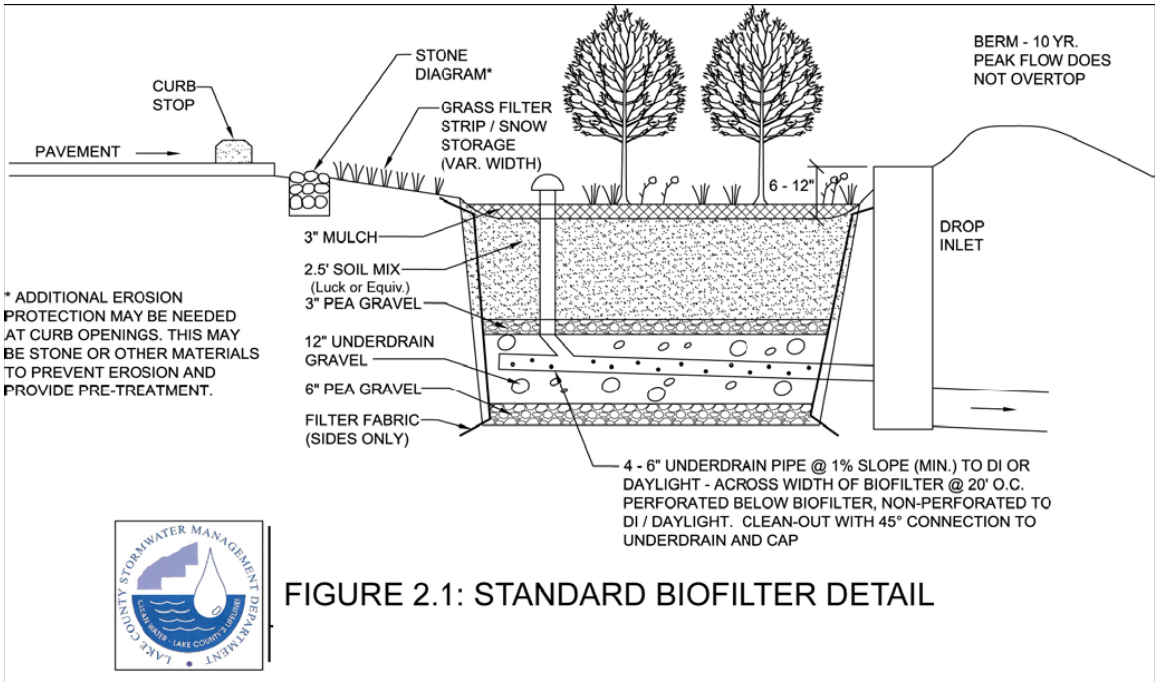

Figure # 2.2
Standard Bioretention Detail

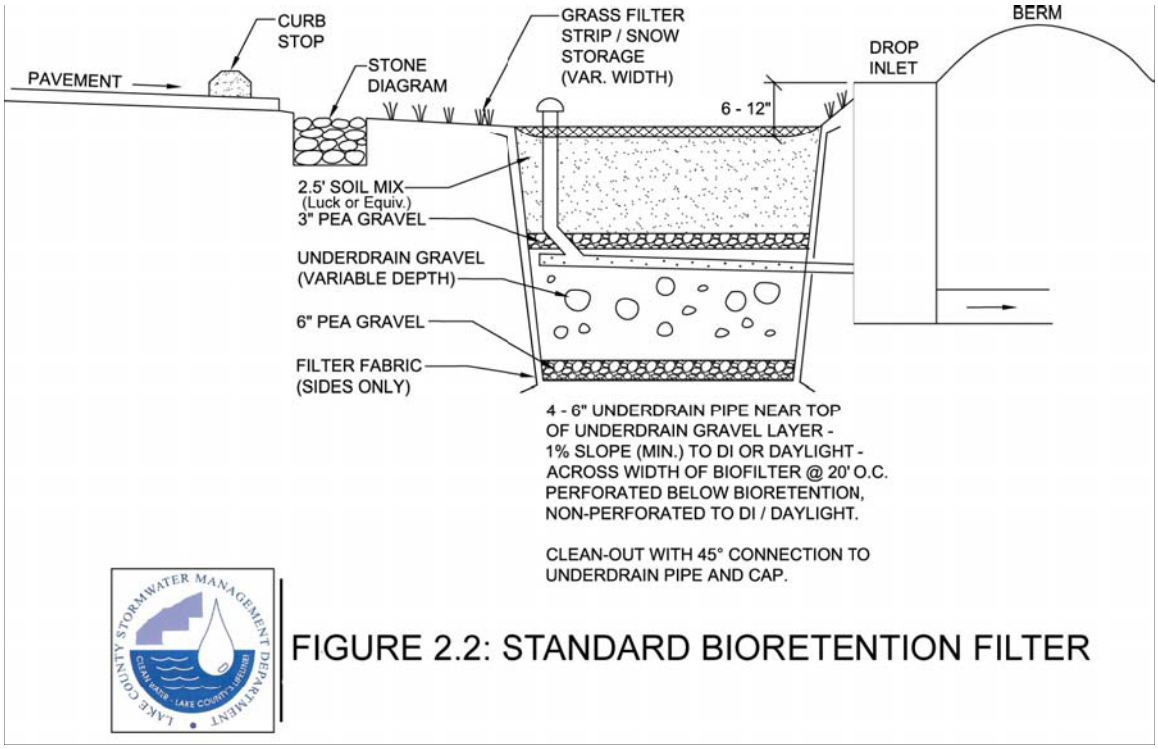

Figure # 2.3
Outlet Structures in Biofilters / Biorentention

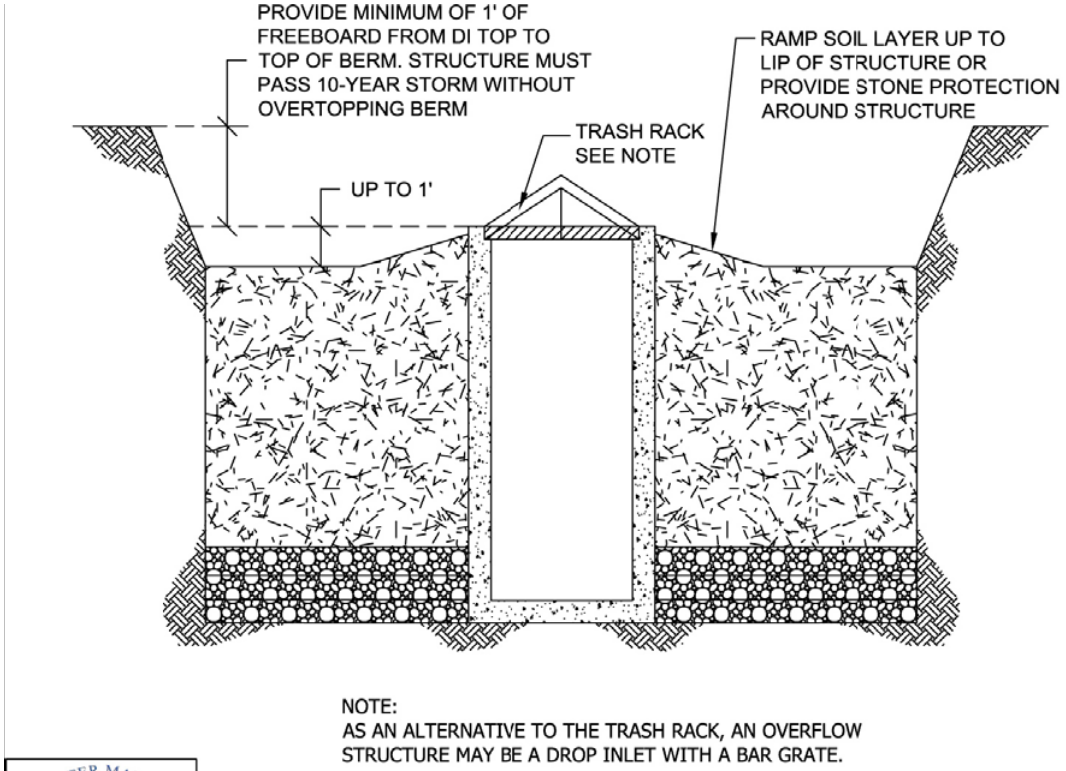

NOTE:
AS AN ALTERNATIVE TO THE TRASH RACK, AN OVERFLOW STRUCTURE MAY BE A DROP INLET WITH A BAR GRATE.

FIGURE 2.3: OUTLET STRUCTURES IN BIOFILTERS AND BIORETENTION

Figure # 2.4
Inlet Options

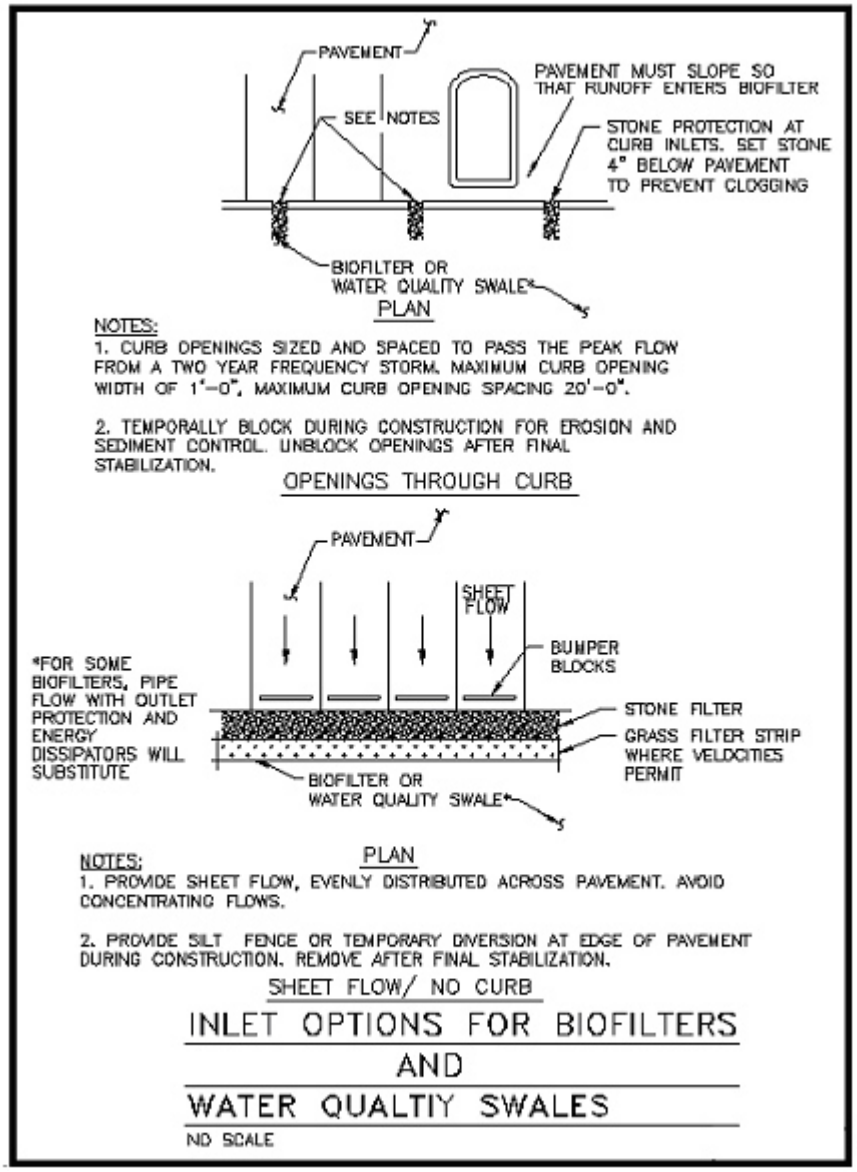

Figure # 2.5
Vegetative Cover Options

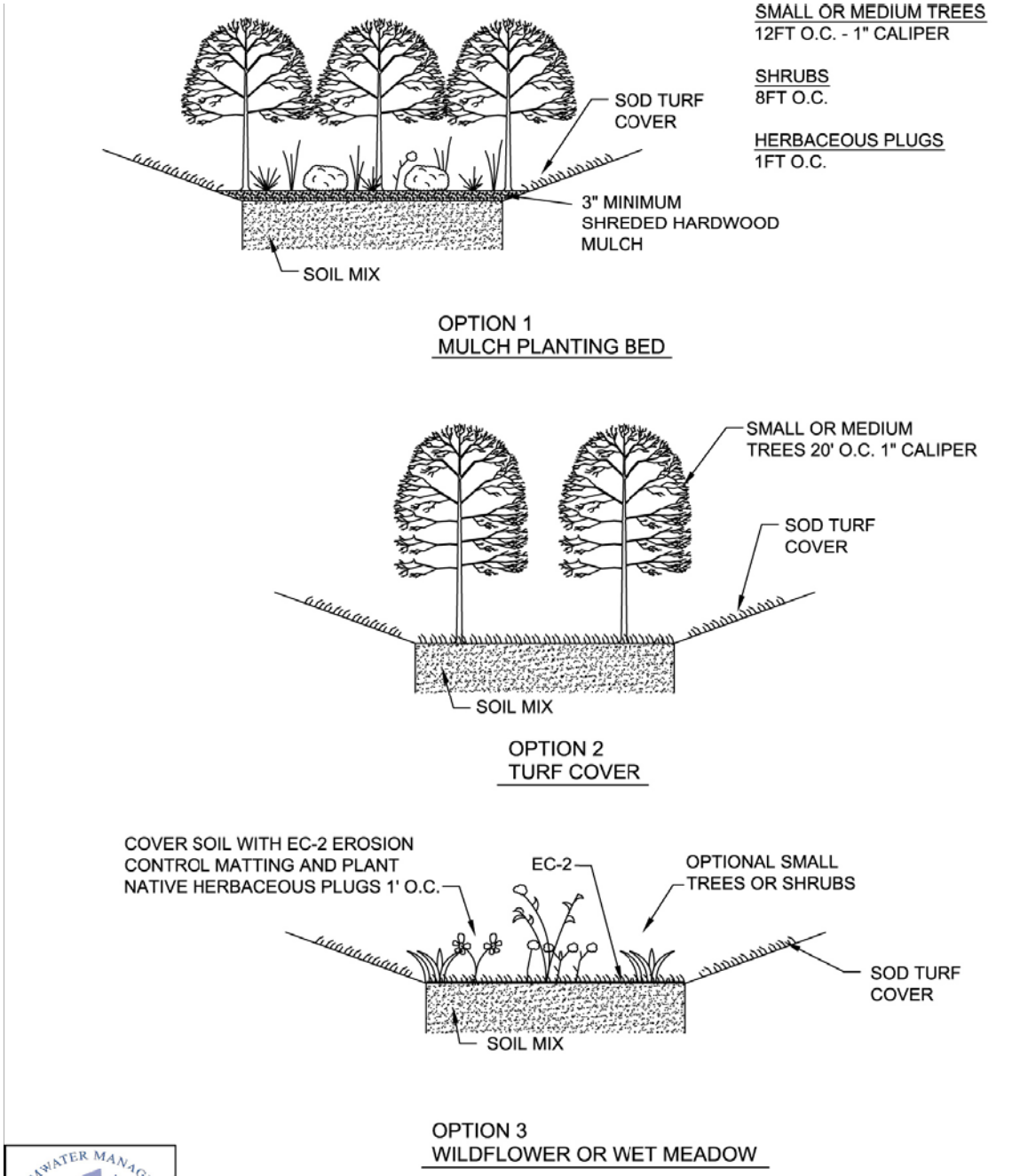

FIGURE 2.5: VEGETATIVE COVER OPTIONS

Maintenance/Inspection Guidelines

A schedule of recommended maintenance for bioretention areas is given in **Table 3.11-5**. The table gives general guidance regarding methods, frequency, and time of year for maintenance.

Planting Soil
Urban plant communities tend to become very acidic due to precipitation as well as the influences of storm water runoff. For this reason, it is recommended that the application of alkaline, such as limestone, be considered once to twice a year. Testing of the pH of the organic layer and soil, should precede the limestone application to determine the amount of limestone required. Soil testing should be conducted annually so that the accumulation of toxins and heavy metals can be detected or prevented. Over a period of time, heavy metals and other toxic substances will tend to accumulate in the soil and the plants. Data from other environs such as forest buffers and grass swales suggest accumulation of toxins and heavy metals within five years of installation. However, there is no methodology to estimate the level of toxic materials in the bioretention areas since runoff, soil, and plant characteristics will vary from site to site. As the toxic substances accumulate, the plant biologic functions may become impaired, and the plant may experience dwarfed growth followed by mortality. The biota within the soil can also become void and the natural soil chemistry may be altered. The preventative measures would include the removal of the contaminated soil. In some cases, removal and disposal of the entire soil base as well as the plant material may be required.

Mulch
Bioretention areas should be mulched once the planting of trees and shrubs has occurred. Any ground cover specified as plugs may be installed once the area has been mulched. Ground cover established by seeding and\or consisting of grass should not be covered with mulch.

Plant Materials
An important aspect of landscape architecture is to design areas that require little maintenance. Certain plant species involve maintenance problems due to dropping of fruit or other portions of the plant. Another problem includes plants, primarily trees, that are susceptible to windthrow, which creates a potential hazard to people and property (parked cars). As a result, some plant species will be limited to use in low-traffic areas. Ongoing monitoring and maintenance is vital to the overall success of bioretention areas. Annual maintenance will be required for plant material, mulch layer, and soil layer. A maintenance schedule should include all of the main considerations discussed below. The maintenance schedule usually includes maintenance as part of the construction phase of the project and for life of the design. An example maintenance schedule is shown in **Table 3.11-6**. Maintenance requirements will vary depending on the importance of aesthetics. Soil and mulch layer maintenance will be most likely limited to correcting areas of erosion. Replacement of mulch layers may be necessary every two to three years. Mulch should be replaced in the spring. When the mulch layer is replaced, the previous layer should be removed first. Plant material upkeep will include addressing problems

associated with disease or insect infestations, replacing dead plant material, and any necessary pruning.

Control of Sediments on the Drainage Shed

Care must be taken to protect the bioretention basin from excessive sediments from the drainage shed. Whenever additional land disturbing activity takes place in the area draining to the basin, effective erosion and sediment control measures must first be put in place to exclude sediments from the basin. Performance based special measures over and above those specified in the ***Virginia Erosion and Sediment Control Handbook***, latest edition, may be required to assure that the bioretention basin is not damaged by such land disturbance. When sand or other street abrasives are used during the snow or icing conditions to provide traction on roadways or parking lots draining to bioretention basins, the pavement should be power/vacuum swept as soon as freezing weather abates to prevent damage to the basins. The Construction Inspection and As-Built Checklist is for use in inspecting bioretention basins during construction and engineering certification of the basin construction. The Operation and Maintenance Inspection Checklist, is for use in conducting maintenance inspections of bioretention basins.

TABLE 3.11 - 6
Example Maintenance Schedule for Bioretention Basin

Description	Method	Frequency	Time of the year
SOIL			
Inspect and Repair Erosion	Visual	Monthly	Monthly
ORGANIC LAYER			
Remulch any void areas	By hand	Whenever needed	Whenever needed
Remove previous mulch layer before applying new layer (optional)	By hand	Once every two to three years	Spring
Any additional mulch added (optional)	By hand	Once a year	Spring
PLANTS			
Removal and replacement of all dead and diseased vegetation considered beyond treatment	See planting specifications	Twice a year	3/15 to 4/30 and 10/1 to 11/30
Treat all diseased trees and shrubs	Mechanical or by hand	N/A	Varies, depends on insect or disease infestation
Watering of plant material shall take place at the end of each day for fourteen consecutive days after planting has been completed	By hand	Immediately after completion of project	N/A
Replace stakes after one year	By hand	Once a year	Only remove stakes In the spring
Replace any deficient stakes or wires	By hand	N/A	Whenever needed
Check for accumulated sediments	Visual	Monthly	Monthly

Construction Inspection and As-Built Checklist

Date_____

Project_____ **Site Plan / SUP Number** _____
Location_____ **Date BMP Placed in Service** _____

Individual(s) Conducting the Inspection_____
"As Built" Plans available: Y / N

Warning: If any bioretention facility component has a watertight cover; be careful regarding the possibility of flammable gases within the facility. Care should be taken lighting a match or smoking while inspecting facilities that are not vented.

	Satisfactory	Observed and Confirmed by (Initial)
1. Flow Splitter or Overflow Drain		
Overflow Invert at correct elevation	_____	_____
Inflow pipe to filter plugged with watertight seal prior to site stabilization (where applicable)	_____	_____
2. Basin(s) and Basin Liner(s) (Where Applicable - Bioretention Filters)		
Basin(s) graded in conformance with plan	_____	_____
Basin liner material(s) conforms to specifications (attach 6" x 6" sample)	_____	_____
Basin liner installation(s) conforms to plans & specifications	_____	_____
3. Collector System(Where Applicable--Bioretention-Filters and Green Alleys)		
Collector pipes meet specs and hole patterns are correct	_____	_____
Collector pipes wrapped in geotextile meeting specs (attach 6" x 6" sample)	_____	_____
Specified galvanized hardware cloth installed over weepholes	_____	_____
Collector gravel meets specs and is installed to design depth	_____	_____
Pea gravel beneath sand meets spec and is installed to design depth	_____	_____
4. Sand and Planting Soil Components		
Filter sand meets specifications (attach lab report showing gradation, effective size and uniformity coefficient)	_____	_____
Filter sand installed to design depth	_____	_____
Planting soil meets design specifications	_____	_____
Planting soil installed to design depth, hydraulically compacted on _____(Date) , and refilled to design depth	_____	_____

Construction Inspection and As-Built Checklist

	Satisfactory	Observed and Confirmed by (Initial)
5. Bioretention Plant Materials		
Plants meet size and variety specifications	_____	_____
All plants installed per landscape plan	_____	_____
Mulch or cover crop installed according to plans and specifications	_____	_____
6. Clearwell Manhole (Where Applicable--Bioretention Filters and Some Green Alleys)		
Clearwell is free of construction debris and dirt	_____	_____
Outflow pipe invert is at the design elevation	_____	_____
Outflow pipe is capped with orifice drilled to design size	_____	_____
7. Monitoring Manholes (where required)		
Manhole shells and covers conform to specs	_____	_____
Inflow and outflow pipe slopes are as specified	_____	_____
Straight pipe runs through manholes are as specified (no bends)	_____	_____
Manholes and pipes are flushed clean	_____	_____

Note: If any of the answers under items 1 - 9 above are checked unsatisfactory, a time frame shall be established for their correction or and a reinspection shall be scheduled. A new form shall be completely filled out at the time of the reinspection. Only the form documenting completely satisfactory performance shall be submitted to the governing jurisdiction for certification. All persons initialing this form shall complete the table below:

Initial	Full Name	Signature	Title/Position and Organization

CERTIFICATION: Based on the above, I certify that the Best Management Practice covered by this report is constructed in accordance with the approved Final Site Plan and as designed.

_____
(Signature)

_____
(Typed Name and Title)
(Place professional seal on certification)

Operation and Maintenance Inspection Checklist

Date_____ Time_____

Project_____ Site Plan / SUP Number _____

Location_____

Date Placed in Service: _____ Date of Last Inspection: _____

Individual Conducting the Inspection _____

(Owner) _____

"As Built" Plans available: Y / N
Bioretention Facility Type: ____ Infiltration; _____ Filter; _____Green Alley

---

Warning: If filtration facility has a watertight cover; be careful regarding the possibility of flammable gases within the facility. Care should be taken lighting a match or smoking while inspecting facilities that are not vented. If filtration facility is in a completely enclosed vault, OSHA Confined Space Entry Procedures must be followed.

	Satisfactory	Unsatisfactory
1. Debris cleanout		
Contributing areas clean of debris	_____	_____
Bioretention facility clean of debris	_____	_____
Inlets and outlets clear of debris	_____	_____
2. Drainage Area Stabilization		
Contributing drainage area stabilized	_____	_____
No evidence of erosion	_____	_____
Area mowed and clippings removed	_____	_____
3. Oil and grease		
No evidence of filter surface clogging	_____	_____
Activities in drainage area minimize oil & grease entry	_____	_____
4. Overflow Structure		
Overflow grate/throat clear of debris	_____	_____
Any grates are in good condition	_____	_____
No evidence of erosion (if draining into a natural channel)	_____	_____

Operation and Maintenance Inspection Checklist

Site Plan/SUP Number _____ **Date:** _____

	Satisfactory	Unsatisfactory
5. Bioretention Planting Soil		
No evidence of planting soil erosion	_____	_____
Bioretention basin clean of sediments	_____	_____
6. Organic Layer		
Mulch covers entire area (NO voids) and to specified thickness	_____	_____
Mulch is in good condition	_____	_____
7. Plants		
Specified number and types of plants still in place	_____	_____
No dead or diseased plants	_____	_____
No evidence of plant stress from inadequate watering	_____	_____
No evidence of deficient stakes or wires	_____	_____

NOTE: Diseased plants must be treated by a qualified professional. Deficient stakes or wires must be replaced. Dead plants or plants diseased beyond treatment must be replaced by plants meeting original design specifications. New plants must be watered every day for the first 14 days after planting. Reinspections must be scheduled to occur following this period.

Action to be taken:

If any of the answers to the above items are checked unsatisfactory, a time frame shall be established for their correction or repair.

No action necessary. Continue routine inspections_____
Correct noted facility deficiencies by_____

Facility repairs were indicated and completed. Site reinspection is necessary to verify corrections or repairs.

Site reinspection accomplished on_____

Site reinspection was satisfactory. Next routine inspection is scheduled for approximately:_____

_____
Signature of inspector

BMP Guidance #2-B
Infiltration Trench

Definition

An infiltration trench is a shallow, excavated trench backfilled with a coarse stone aggregate to create an underground reservoir. Stormwater runoff diverted into the trench gradually infiltrates into the surrounding soils from the bottom and sides of the trench. The trench can be either an open surface trench or an underground facility.

Purpose

Infiltration trenches are used primarily as water quality BMPs. Trenches are generally 2 to 10 feet deep and are backfilled with a coarse stone aggregate, allowing for temporary storage of stormwater runoff in the voids between the aggregate material. Stored runoff gradually infiltrates into the surrounding soil. The surface of the trench can be covered with grating and/or consist of stone, gabion, sand, or a grassed area with a surface inlet. Utilizing underground pipes within the trench can increase the temporary storage capacity of the trench and can sometimes provide enough storage for flooding and/or stream channel erosion control (see **Figure 1.2**).

Conditions Where Practice Applies

An infiltration trench may be used where the subsoil is sufficiently permeable to provide a reasonable infiltration rate and where the water table is low enough to prevent pollution of groundwater.

Infiltration facilities are not recommended for areas where karst topography is present (in Virginia, west of the Blue Ridge Mountains) due to the possibility of causing subsurface collapse and sinkhole formation.

Drainage Area

Infiltration trenches are not practical for large drainage areas. Generally, the drainage area for infiltration trenches should be limited to 5 acres. Multiple trenches may be considered to control the runoff from a large site, but this also increases the associated maintenance responsibilities.

Development Conditions

Infiltration trenches can be installed in multi-use areas, such as along parking lot perimeters, or in small areas that cannot readily support retention basins or similar structures. Infiltration trenches can be used in residential areas, commercial areas, parking lots and open space areas. Unlike most BMPs, trenches can easily fit into the margin, perimeter, or other unused areas of developed sites, making them particularly suitable for retrofitting in existing developments or in conjunction with other BMPs. A trench may also be installed under a swale to increase the storage of the related infiltration system. In all cases, pretreatment of the stormwater runoff to remove course sediment and particulate pollutants prior to entering the infiltration trench should be provided.

Planning Considerations

Appropriate soil conditions and protection of groundwater are two important considerations when planning for an infiltration trench.

Design Criteria

The purpose of this section is to provide recommendations and minimum criteria for the design of infiltration trenches intended to comply with the runoff quality requirements of the Virginia Stormwater Management program.

General

Infiltration trenches are assumed to have rectangular cross-sections. Thus, the infiltration surface area (trench bottom) can be readily calculated from the trench geometry. The storage volume of the trench must be calculated using the void ratio of the backfill material that will be placed in it (e.g., 40% for uniformly graded clen #57 stone)..
The same general criteria presented for the design of infiltration basins apply to trenches; the following information is provided for additional guidance.

Soils Investigation

A soil boring log should be required for every 50 feet of trench length. A minimum of two soil boring logs should be required for each proposed trench location.

Topographic Conditions

Infiltration trenches should be located 20 feet down-slope and 100 feet up-slope from building foundations. An analysis should be completed to identify any possible adverse effects of seepage zones if there are nearby building foundations, basements, roads, parking lots or sloping sites. Developments on sloping sites often require the use of extensive cut and fill operations. **The use of infiltration trenches on fill sites is not permitted**.

Design Infiltration Rate

The design infiltration rate, f_d , should be set to equal one-half the infiltration rate obtained from the soil analysis. Therefore,

$$f_d = 0.5\ f$$

Maximum Storage Time and Trench Depth

All infiltration trenches should be designed to empty within 2 days following the occurrence of a storm event. Thus, a maximum allowable storage time, T_{max}, of 48 hours should be used.

The maximum depth for an infiltration **trench** may be defined as:

$$d_{\max} = \left(\frac{f_d T_{\max}}{V_r} \right)$$

where: d_{max} = maximum allowable depth of the facility, in ft;
f_d = design infiltration rate of the trench area soils, in ft/hr (f_d = 0.5f);
T_{max} = maximum allowable drain time = 48 hrs;
V_r = void ratio of the stone reservoir expressed in terms of the percentage of porosity divided by 100 (0.4 typ.).

Refer to the Virginia Department of Transportation's Road and Bridge Specifications, latest edition, for information and specifications for coarse aggregates. A void ratio of 0.40 is assumed for stone reservoirs using 1.5 to 3.5 inch stone - VDOT No. 1 Coarse-graded Aggregate.

The minimum surface area of the facility bottom may be defined as:

$$\mathbf{SA_{min} = Vol_{wq}/f_d T_{max}}$$

where: SAmin = minimum trench bottom surface area, in ft^2;
Vol_{wq} = water quality volume requirements, in ft^3;
f_d = design infiltration rate of the trench area soils, in ft/hr (f_d = 0.5f);
T_{max} = maximum allowable drain time = 48 hrs.

Runoff Pretreatment

When appropriate, infiltration trenches should be preceded by a pretreatment facility. Grease, oil, floatable organic materials, and settleable solids should be removed from the runoff before it enters the trench. Vegetated filters, sediment traps or forebays, and water quality inlets are just a few of the available pretreatment strategies.

A grass strip or other type of vegetated buffer at least 20 feet wide should be maintained around trenches that accept surface runoff as sheet flow. The slope of the filter strip should be approximately 1% along its entire length and 0% across its width. For areas receiving high-suspended solid loads, a minimum filter length of 50 feet is desirable.

All trenches with surface inlets should be engineered to capture sediment from the runoff before it enters the stone reservoir. Any pretreatment facility design should be included in the design of the trench, complete with maintenance and inspection requirements.

Backfill Material

An 8 inch deep bottom layer of course sand, free of clay and silt, (VDOT Fine Aggregate, Grading A or B) is required for all trenches to promote better drainage and reduce the risk of soil compaction when the trench is backfilled with stone. Backfill material for the infiltration trench should be clean aggregate with a maximum diameter of 3.5 inches and a minimum diameter of 1.5 inches (i.e., VDOT No. 1 Open-graded Coarse Aggregate or equivalent). The aggregate should contain few aggregates smaller than the selected size. Void space for VDOT No. 1 aggregate is assumed to be 40 percent.

A 4 to 6 inch thick top layer of VDOT No. 5 or No. 57 open graded rock is needed to stabilize the upper filter cloth and surfacing materials.

Filter Fabric

The aggregate fill material should be surrounded with an engineered filter fabric as shown in **Figure 1.4**. For an aggregate surface trench, filter fabric should surround all of the aggregate fill material except the top one-foot. A separate piece of fabric should be used for the top layer to act as a failure plane. This top piece can then be removed and replaced upon clogging. Note, however, that filter fabric should **not** be placed on the trench bottom. Refer to the Virginia Erosion and Sediment Control Handbook 1992 edition, for filter fabric specifications.

Overflow Channel

Usually, because of the small drainage areas controlled by an infiltration trench, an emergency spillway is not necessary. However, when the capacity of the trench is exceeded, the overland flow path taken by the surface runoff should always be evaluated. A non-erosive overflow channel leading to a stabilized watercourse should be provided, as necessary, to insure that uncontrolled, erosive, concentrated flow does not develop.

Observation Well

An observation well should be installed for every 50 feet of infiltration trench length. The observation well will show how quickly the trench dewaters following a storm, as well as providing a means of determining when the filter fabric is clogged and maintenance is needed (refer to **Figure 1.3**).

The observation well should consist of perforated PVC pipe, 4 to 6 inches in diameter. It should be installed in the center of the structure, flush with the ground elevation of the trench. For inspection purposes, it is best to put the observation well in a non-parking or traffic area or area where it will not be subject to getting crushed or damaged. The well should also be placed where it will not be crushed. The top of the well should be capped to discourage vandalism and tampering.

Figure 1.4

Filter Fabric Placement

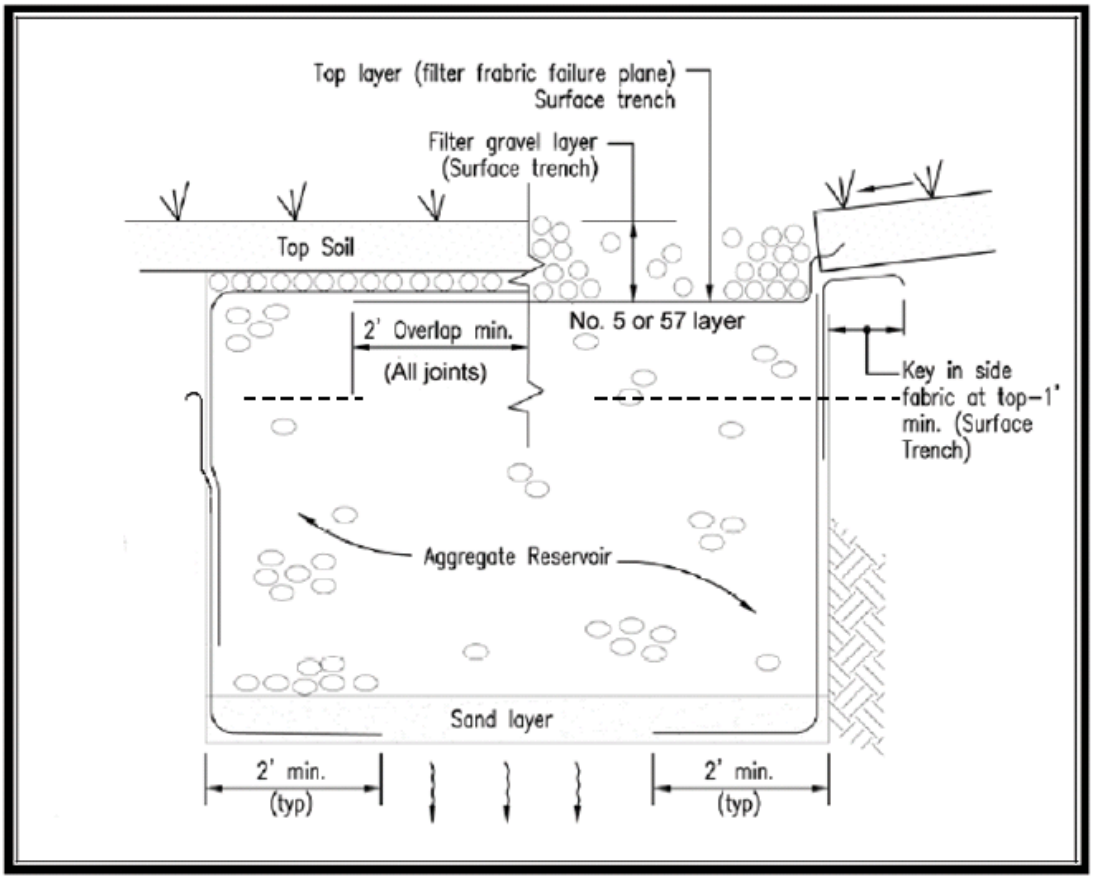

Construction Specifications

Overall, widely accepted construction standards and specifications, such as those developed by the USDA Soil Conservation Service or the U.S. Army Corps of Engineers, should be followed where applicable. Further guidance can be found in the Soil Conservation Service's Engineering Field Manual. Specifications for the work should conform to the methods and procedures indicated for installing earthwork, concrete, reinforcing steel, pipe, water gates, metal work, woodwork and masonry, as they apply to the site and the purpose of the structure. The specifications should also satisfy any requirements of the local government.

Construction of an infiltration trench should also be in conformance with the following:

Sequence of Construction

An infiltration trench should not be constructed or placed into service until all of the contributing drainage area has been stabilized. Runoff from untreated, recently constructed areas within the drainage area may load the newly formed trench and/or pretreatment facility with a large volume of fine sediment.

The specifications for the construction of an infiltration trench should state the following: 1) the earliest point at which storm drainage may be directed to the trench, and 2) the means by which this delay in use is to be accomplished. Due to the wide variety of conditions encountered among development projects, each project should be evaluated separately to postpone trench use for as long as possible.

Trench Preparation

Trench excavation should be limited to the specific trench dimensions. Excavated materials should be placed away from the trench sides to avoid impacting the trench wall stability.

The trench should be excavated with a backhoe or similar device that allows the equipment to stand away from the trench bottom. This bottom surface should be scarified with the excavator bucket teeth on the final pass to eliminate any smearing or shearing of the soil surface. Similarly, the sand filter material should be placed on the trench bottom so that it does not compact or smear the soil surface. The sand must be deposited ahead of the loader so the equipment is always supported by a minimum of 8 inches of sand.

Tree roots must be trimmed flush with the trench sides to prevent the fabric from puncturing or displacing during subsequent installation procedures. No voids between the filter fabric and the excavation walls should be present. If boulders or similar obstacles are removed from the excavated walls, natural soils should be placed in these voids before the filter fabric is installed. The sidewalls of the trench should be roughened where sheared and sealed by heavy equipment.

Vertically excavated walls may be difficult to maintain in areas where the soil moisture is high or where soft cohesive or cohesionless soils predominate. These conditions may require that the side slopes be laid back to maintain stability; trapezoidal rather than rectangular cross sections may result.

Fabric Lay Down

The roll of filter fabric should be cut to the proper width before installation. The width should allow for perimeter irregularities plus a minimum 24-inch longitudinal overlap at the top. When a fabric overlap is required elsewhere, the upstream section should overlap the downstream section by a minimum of 2 feet to ensure that the fabric conforms to the excavation surface during aggregate placement. Note that filter fabric should **not** be placed on the trench bottom.

Stone Aggregate Placement Compaction

The crushed stone aggregate should be placed in the trench in loose lifts of about 12 inches using a backhoe or front-end loader with a drop height near the bottom of the trench, and should be lightly compacted with plate compactors. Aggregate should not be dumped into the trench by a truck.

Backfill material for the infiltration trench should be clean, washed aggregate 1.5 to 3.5 inches in diameter (VDOT No. 1 Open-graded Coarse Aggregate or equivalent). The aggregate should contain few aggregates smaller than the selected size.

Overlapping and Covering

Following the stone aggregate placement, including the top stabilization layer, the filter fabric should be folded over the stone aggregate to form a 24-inch minimum longitudinal overlap. The desired fill soil or stone aggregate should be placed over the lap at sufficient intervals to maintain the lap during subsequent backfilling.

Potential Contamination

Clean aggregate **should not** be mixed with natural or fill soils. All contaminated aggregate should be removed and replaced with clean aggregate.

Traffic Control

To prevent or reduce compaction of the soil, heavy equipment and traffic should not travel over the infiltration trench.

Observation Well

Observation wells should be provided as specified in the design criteria. The depth of the well at the time of installation should be clearly marked on the well cap.

Maintenance & Inspection Guidelines

The following maintenance and inspection guidelines are not intended to be all-inclusive. Specific facilities may require other measures not discussed here.

Inspection Schedule

The observation well and pretreatment facility should be monitored quarterly and after every large storm event. It is recommended that a logbook be maintained showing the depth of water in the well at each observation in order to determine the rate at which the facility dewaters after runoff producing storm events. Once the performance characteristics of the structure have been verified, the monitoring schedule can be reduced to an annual basis, unless the performance data suggest that a more frequent schedule is required.

Sediment Control

Sediment buildup in the top foot of stone aggregate or the surface inlet should be monitored on the same schedule as the observation well. A monitoring well in the top foot of stone aggregate should be provided when the trench has a stone surface. Sediment deposited should not be allowed to build up to the point where it will reduce the infiltration rate into the trench.

It is recognized that infiltration facilities are subject to clogging. Once a trench facility has clogged, very little can be done to correct it, short of excavating the facility. Maintenance efforts, therefore, should focus on the measures used for pretreatment of runoff, in addition to the facility itself.

Vegetation Maintenance

Any vegetated buffers associated with an infiltration trench should be inspected regularly and maintained as needed. Signage should be placed at the buffer to provide notification that the buffer should not be removed. Regular maintenance of the buffer is necessary to promote dense turf with extensive root growth, which subsequently enhances runoff filtering, prevents erosion and sedimentation, and deters invasive weed growth. Bare spots should be immediately stabilized and re-vegetated. Fertilizers should be applied only as necessary and in limited amounts to avoid contributing to pollution problems that the infiltration basin helps to mitigate. Consult the Virginia Erosion & Sediment Control Handbook 992 edition for appropriate fertilizer types and application rates.

Design Procedures

The following design procedure represents a generic list of the steps typically required for the design of an infiltration trench.

1. Determine if the anticipated development conditions and drainage area are appropriate for an infiltration trench application.

2. Determine if the soils (permeability, bedrock, water table, Karst, etc.) and topographic conditions (slopes, building foundations, etc.) are appropriate for an infiltration trench application.
3. Locate the infiltration trench on the site within topographic constraints.
4. Determine the drainage area for each infiltration trench and calculate the required water quality volume.
5. Evaluate the hydrology of the contributing drainage area to determine peak rates of runoff.
6. Design the infiltration trench:
    - design infiltration rate, $f_d = 0.5$ f
    - max. storage time $T_{max} = 48$ hours
    - max. storage depth, d_{max}
    - max. storage depth, d_{max}
    - stone backfill of clean aggregate (1.5" to 3.5") VDOT No. 1 Open-Graded Course Aggregate
    - sand layer on trench bottom (8 inches)
    - runoff pretreatment - concentrated input, sheet flow input
    - vegetated buffer around trench to filter surface runoff

- filter fabric on trench sides and top (not on trench bottom) keyed into trench
- overflow channel or large storm bypass
- observation well

7. Provide material specifications.
8. Provide sequence of construction.
9. Provide maintenance and inspection requirements.

BMP Guidance #2-C
Roof Downspout System

Definition

A roof downspout system is an infiltration trench practice intended only for infiltrating rooftop runoff transported to the trench via roof downspout drains.

Purpose

The purpose of a roof downspout system is to provide water quality enhancement of rooftop runoff via infiltration of the water quality volume into the surrounding soils. This facility is not designed to infiltrate other surface water, (e.g. flow from eroding hillsides or parking lots) that could transport sediment or pollutants.

Conditions Where Practice Applies

Roof downspout systems may be used in any situation where disposing of rooftop runoff without direct connections to existing drainage systems or BMPs is acceptable and advantageous. Because of their small size, they are well suited for retrofitting in areas where runoff control of existing or new rooftop areas associated with building additions becomes necessary. As part of a low impact development strategy, roof downspout systems effectively disconnect the rooftop imperviousness from the drainage system, which helps reduce the stormwater impact of the development. Use of roof downspout systems (or infiltration trenches in general) in residential areas should be used with caution due to concern for the potential lack of inspections and maintenance, and ultimate failure and abandonment of the facility.

Planning Considerations

The planning considerations for roof downspout systems are the same as those for infiltration trenches (**Guidance 1-A**). The drainage area is limited to the rooftop areas of residential and/or commercial structures.

Design Criteria

This section provides recommendations and minimum criteria for the design of roof downspout systems intended to comply with the runoff quality requirements of the Virginia Stormwater Management program.

The design criteria for roof downspout systems are the same as those for infiltration trenches with the following exceptions and/or additions:

Distance from Structures

Roof downspout systems should be a minimum of 10 feet down-slope from any structure or property line, 30 feet upslope from any structure, and 30 feet from any septic tank or drain field.

Runoff Pre-Treatment

Gutters should be fitted with mesh screens to prevent leaf litter and other debris from entering the system in areas where there is tree cover. The expected growth of newly planted trees should be considered.

A pretreatment settling basin as shown in **Figure 1.5** should be provided on all roof downspout systems.

Overflow

An overflow outlet should be provided on the downspout at the surface elevation to allow flow to bypass the infiltration facility when it is full or clogged (See **Figure 1.5**). Adequate surface drainage away from the structure is required in compliance with appropriate building codes, without consideration of the infiltration system.

Dry Well Design

Figure 1.6 is an alternative detail for a roof drain "dry well." The dry well is similar to an infiltration trench, but is shaped more like a pit. The detail in **Figure 1.6** can also be used for wintertime drawdown of cisterns, when no water reuse is anticipated and storage capacity should be preserved by slowing percolating stored water into the ground (see **BMP Guidance 5, Rainwater Harvesting**).

Construction Specifications

The construction specifications for roof downspout systems are the same as those for infiltration trenches.

Maintenance and Inspection Guidelines

Maintenance procedures are identical for those of an infiltration trench. Since these facilities are installed on individual buildings and other structures, provisions need to be made for their maintenance, especially when they are installed on single-family dwellings. When flow is observed to be bypassing the facility, the system has clogged and should be evaluated for rehabilitation.

Design Procedures

The following design procedure represents a generic list of the steps typically required for the design of a roof downspout system.

1. Determine if the anticipated development conditions and rooftop areas are appropriate for a roof downspout system.
2. Determine if the soils (permeability, bedrock, water table, karst, etc.) and topographic conditions (slopes, building foundations, etc.) are appropriate for a roof downspout system.
3. Locate the roof downspout system on the site within site topographic constraints.
4. Determine the roof area for each roof downspout system and calculate the required water quality volume.
5. Design the roof downspout system:

   - design infiltration rate, $f_d = 0.5$ f
   - max. Storage time $T_{max} = 48$ hours
   - max. Storage depth, d_{max}
   - stone backfill of clean aggregate (1.5" to 3.5" diameter) - VDOT No. 1 Open-graded Course Aggregate
   - sand layer on trench bottom (8 inches)
   - runoff pretreatment – concentrated input: gutter screens, settling basin
   - filter fabric on trench sides and top (not on trench bottoms) keyed into trench
   - overflow channel or large storm bypass
   - observation well

6. Provide material specifications.
7. Provide sequence of construction.
8. Provide maintenance and inspection requirements.

Figure 1.5

Roof Downspout System with a Pretreatment Settling Basin

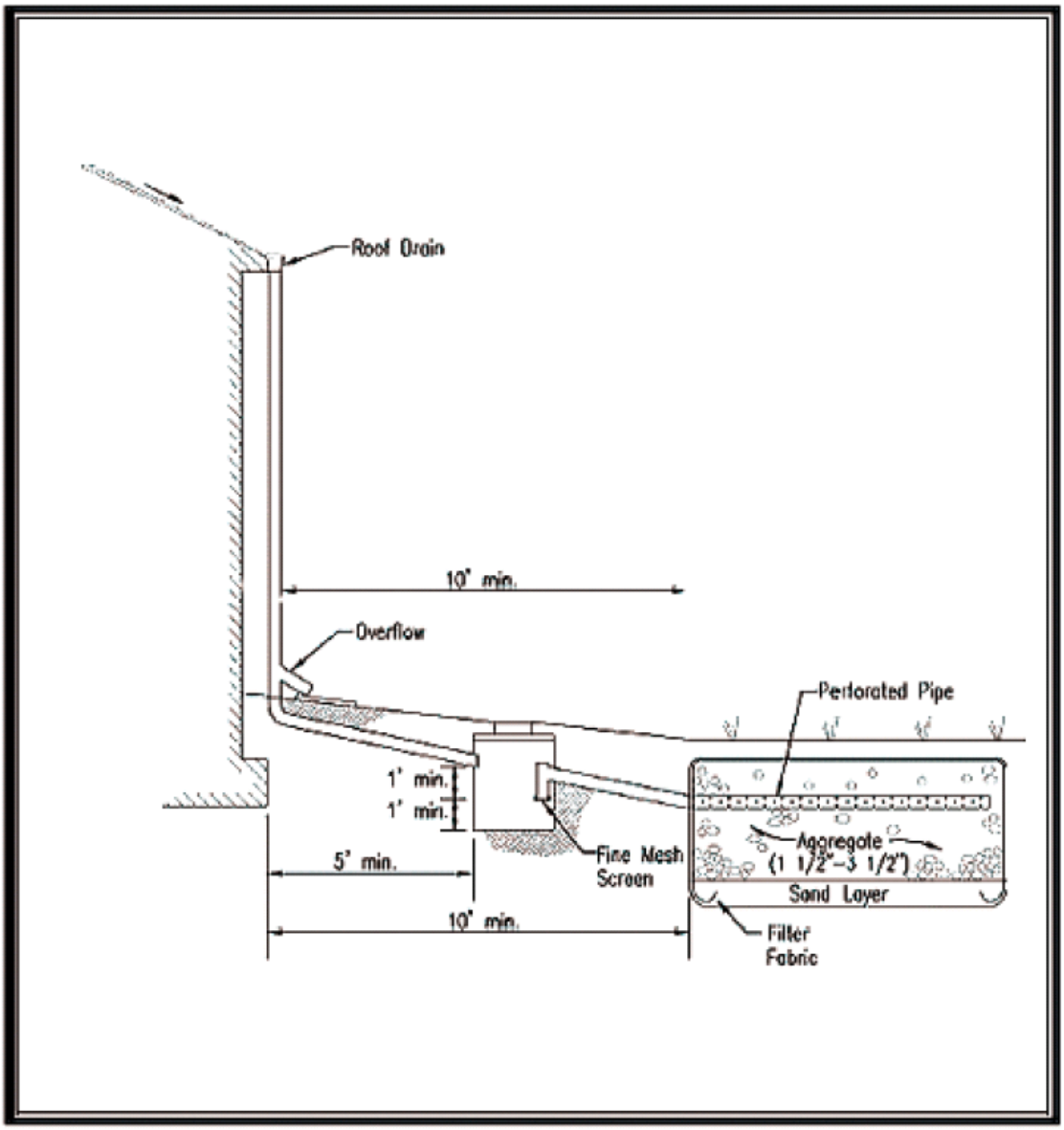

Figure 1.6
Dry Well

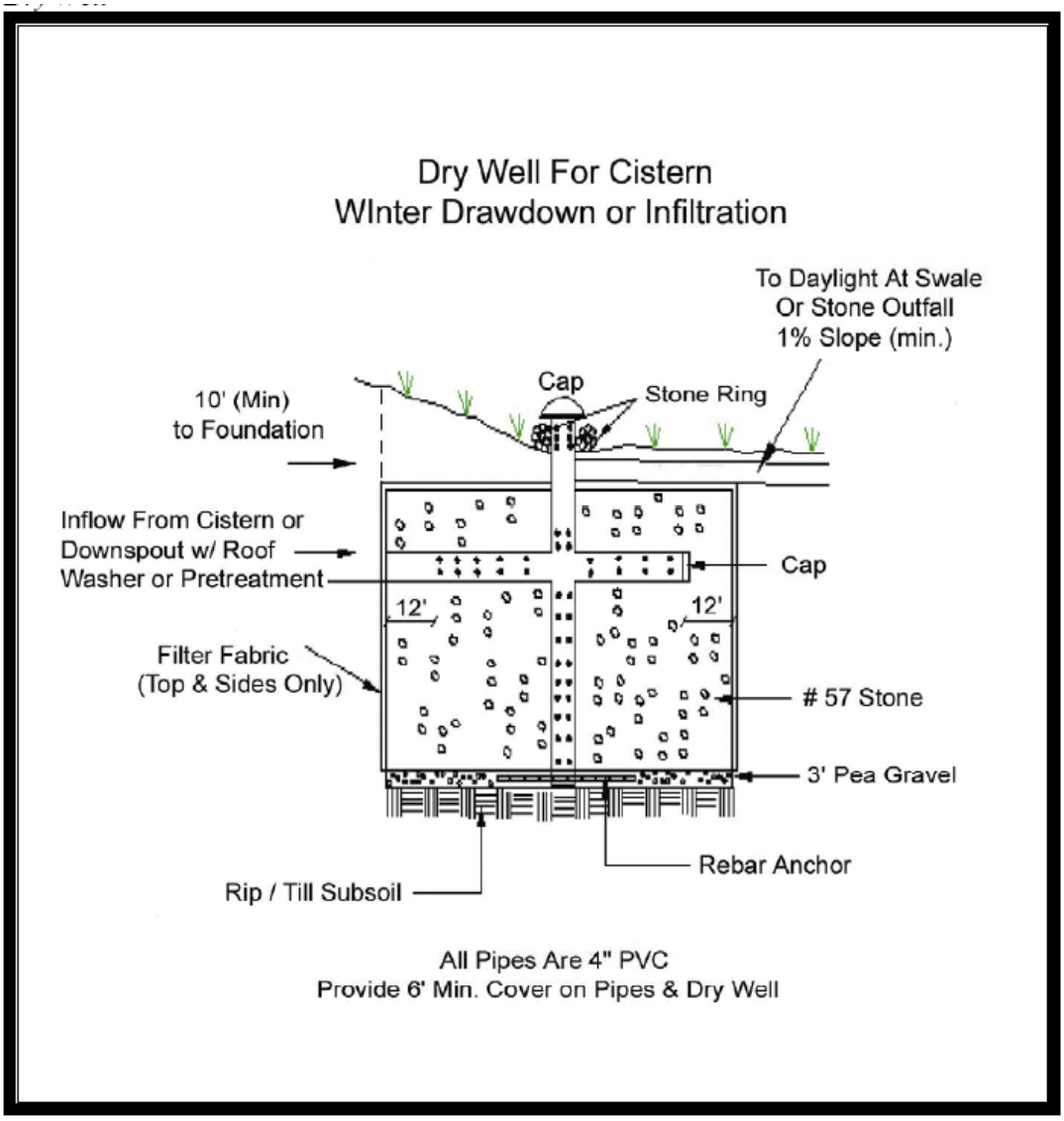

<u>BMP Guidance #2-D</u>
Plastic Chamber Systems

Definition

Plastic chambers are arch-shaped, open bottom, high-density plastic structures of various sizes and related storage capacities.

Purpose

Plastic chambers are typically used as a component to a water quality BMP for providing increased subsurface storage volume for stormwater runoff. Infiltration trenches rely on the void ratio of the stone reservoir to hold the runoff while it slowly infiltrates into the subsoil. These chambers provide a large void capacity and can be used to increase the storage volume in order to store and therefore infiltrate a greater volume of runoff, or they can be used to decrease the required trench size and stone necessary to provide the equivalent storage volume. The large open-bottom chamber design is also intended to provide increased water quality enhancement due to the relatively large area of bio-mat formation under the chambers, similar to the chambers' function when used for septic drain fields.

Plastic chamber systems can also be used to provide detention storage for purposes of stream channel erosion control, i.e. detention of runoff from the 1-year, 2-year, or even 10-year frequency storm.

It should be noted that these chambers could be used in a linear configuration, in place of conveyance pipe, from inlet structures to stormwater BMPs. Some of the larger chambers currently manufactured are capable of conveyance comparable to a 48 inch diameter pipe. An advantage of this alternative conveyance approach is to encourage infiltration in areas where it otherwise would not be provided.

Figure 7A.1 -
Plastic Chamber Systems

Plastic Chamber Systems

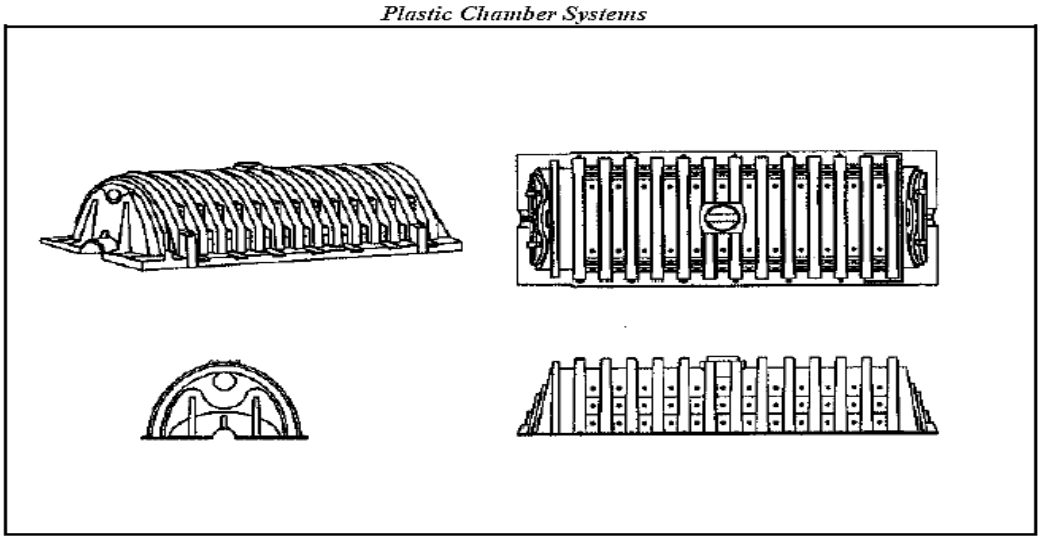

Note: Refer to manufacturer specification for dimensions. Several sizes and shapes are available.

Conditions where Practice Applies

Plastic chamber systems are presented here as a component of infiltration practices. Drainage Area and Development Condition considerations and limitations associated with Infiltration Practices and Plastic chamber systems are presented here as a component of infiltration practices. Drainage Area and Development Condition considerations and limitations associated with Infiltration Practices and Bioretention Basins will apply.

These chamber systems can be placed in the subsurface storage area of infiltration trenches, roof down spout systems, porous pavement, and bioretention basins and filters. These chamber systems are most effective where the subsoil is sufficiently permeable to provide a reasonable infiltration rate and where the water table is low enough to prevent pollution of groundwater. However, where the subsoil is not sufficiently permeable to provide a reasonable infiltration rate, plastic chamber systems can be used as subsurface detention facilities for purposes of stream channel erosion or flood control. When these systems are used for detention purposes, the economics of placing detention underground, and therefore freeing up property, which would otherwise be dedicated to a detention facility, must be weighed against the initial cost of the chamber system and the long-term maintenance costs of the system.

In general, a pretreatment design, which prevents trash, debris, or excessive sediment from entering the chambers and potentially clogging the outlet device, must be provided. Underground detention of stormwater raises concerns regarding maintenance. The structure will remain full of water for extended periods if debris clogs the outlet pipe. In some cases this may result in increased opportunities for infiltration. However, if the soils are not permeable, the structure will remain full and possibly cause the next storm to bypass or backup the system.

Plastic chambers are well suited for retrofit of existing stormwater systems to provide a water quality BMP and/or runoff quantity control benefits. This is **particularly applicable in highly developed areas** with storm sewer systems with little or no integrated water quality BMPs or water quantity controls. Relatively small plastic chamber systems can be “tucked” into available areas or used to replace existing stormwater conveyance pipe. They can even be set in place of conveyance pipe for new construction.

Plastic chambers can also be used as an integral component of other infiltration facilities. When used in place of perforated pipe in an infiltration trench, the functional life of the infiltration trench can be extended due to the open bottom area of the chambers. When used within the base area of a bioretention facility, they increase the amount of water, which can be filtered through the engineered soil media during storms that produce runoff in excess of the infiltration capacity of the underlying soils.

Infiltration facilities are not recommended for areas where karst topography is present due to the possibility of causing subsurface collapse and solution channel formation.

Drainage Area

Plastic chamber systems are practical for small to medium sized drainage areas. Generally, plastic chamber systems can be used for drainage areas of up to 10 acres. For infiltration facilities, which rely on the bottom surface area for infiltrating into the subsoil, the designer must check to verify that the facility will drain within the required

time period. When the chambers are used under a Bioretention Filter (with an under drain system), the surface or planting area of the facility will determine the allowable drainage area.

Development Conditions

Because plastic chamber systems can be installed under trafficked or non-trafficked, open space or paved areas, they are equally well suited for low- to high- density residential, commercial, and industrial developments. They can be installed under roadways or within the roadway shoulder, or under parking lots, landscaped areas, tennis and basketball courts, play areas, or athletic fields. Smaller, multiple systems can be scattered throughout a site, under various types of land uses, each separate from the others with its own inlet structures. Due to their great flexibility in configuration and installation, plastic chamber systems can be configured in a single long line or in a rectangular or square "block" of numerous parallel rows of chambers. Other configurations are also possible by altering the number of chambers in different rows.

Figure 7A.2 -
Application of Plastic Chamber System Under Porous Pavement and Open Space

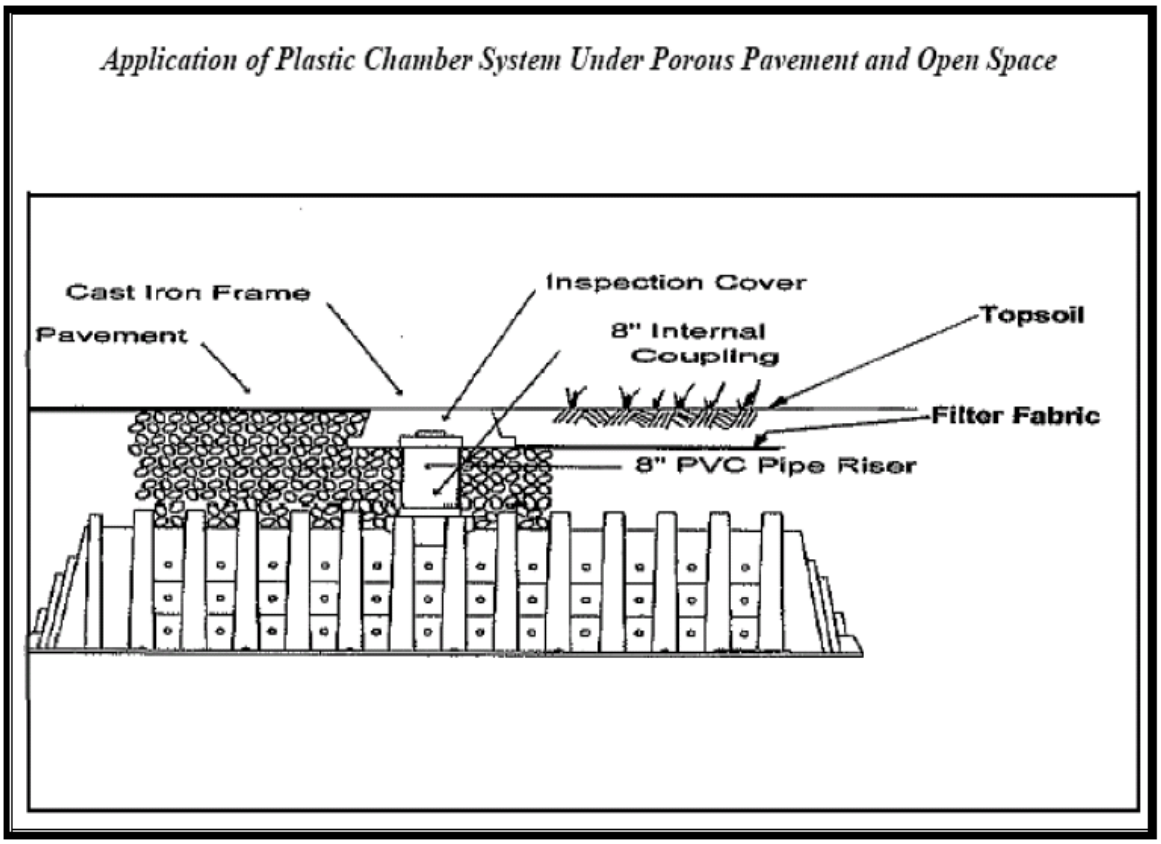

Planning Considerations

Planning considerations include site conditions: soil permeability, depth to seasonal high groundwater table and bedrock, topographic conditions; sediment (and debris) control: construction runoff and urban runoff; and maintenance. Site conditions must be reviewed to verify that the site does not overlay Karst topography.

Soil permeability will determine whether the plastic chambers can be utilized as a water quality BMP to promote infiltration, or simply for temporary detention of stormwater. For further discussion, refer to the **Planning Considerations** discussed in **BMP Guidance 1 in this Manual and/or General Infiltration Practices,** and **Bioretention Basin Practices,** in the Virginia Stormwater Management Handbook.

Design Criteria

The purpose of this section is to provide recommendations and minimum criteria for the design of plastic chamber systems. The designer must verify that the use of the selected product is in accordance with the manufacturers specifications.

Plastic stormwater chambers shall be designed to exceed the American Association of State Highway and Transportation Officials (AASHTO) recommended Load and Resistance Factor Design (LRFD) for earth loads and HS-20 live loads, with consideration for impact and multiple presences, when installed per the manufacturer's minimum requirements. It is the ultimate responsibility of the design engineer to seek verification from the plastic stormwater chamber's manufacturer that these structural requirements are met.

General

Plastic chamber systems can be designed in many configurations to meet the specific limitations of the site and the main purpose for which they are being used, e.g. temporary storage of runoff as either detention or retention, for a water quality BMP, or for stormwater conveyance. This section shall focus on the use of plastic chamber systems for temporary storage of runoff and for a water quality BMP.

The reader should refer to **BMP Guidance 1-A of this Manual or Minimum Standard 3.10B, Infiltration Trench, Virginia Stormwater Management Handbook,** for soils investigation requirements, topographic conditions and limitations, design infiltration rate, and maximum storage time and trench depth. (Refer to manufacturers specifications for maximum depth and loading capacities of specific product models.) The storage volume of a plastic chamber system is calculated by summing the void space provided by the chambers and that of the surrounding stone.

Runoff Pretreatment

Preventative maintenance of subsurface storage systems, i.e. catch basins with sumps, silt diversion structures, siltation basins, etc. is in accordance with sound BMP practices. Additional chambers may be added to the system to compensate for potential loss of storage capacity. This has been achieved with some installations by replacing the inflow and/or outflow manifold pipes with chambers, and/or by using plastic chambers in place of conveyance pipe. Another approach includes segregating the first two or three chambers of each row from the rest of the plastic chamber system with high-density plastic pipe connecting the upper holes in the end walls of the chambers. The first set of

plastic chambers functions as a sediment trap. In this type of configuration, eight inch PVC risers can be placed on the first, and/or second chambers of the first two "up-flow" plastic chamber rows for observation and clean-out.

Backfill Material

Backfill material for plastic chamber systems should be clean 1½ to 2 inch hard granite-type stone aggregate up to at least the top of the chambers. **Limestone aggregate should not be used** in order to avoid the "pasting" of limestone fines that can deter infiltration. Additional aggregate of the same specifications can be added for the remaining fill to also function as the base for porous pavement, or to a height suitable for the addition of sufficient soil for grass and/or shrub placement. A minimum of 6 inches of clean 1½ to 2 inch hard granite-type stone aggregate should also be placed as a base, underlying the plastic chamber system. A geotechnical investigation should be undertaken to determine if stabilization of the system base is needed.

Filter Fabric

The top of the aggregate fill material should be covered with a geotechnical fabric. It is also recommended that an engineering filter fabric should be placed along the sides of the trench. Note, however, that filter fabric should **not** be placed on the trench bottom.

Overflow Channel

Because of the small drainage areas controlled by a plastic chamber system, an emergency spillway is not necessary. Due to their relatively higher void capacity, plastic chamber systems can hold relatively higher storage volumes. Plastic chamber systems, particularly with the larger chambers, are capable of retaining significant storm events without an overflow facility in many cases.

However, the overland flow path to be taken by the surface runoff, when the capacity of the plastic chamber system is exceeded, should always be evaluated. A non-erosive overflow channel leading to a stabilized watercourse should be provided, as necessary, to insure that uncontrolled, erosive, concentrated flow does not develop.

Figure 7A.3 –
Example Site Design Using Plastic Chamber Systems

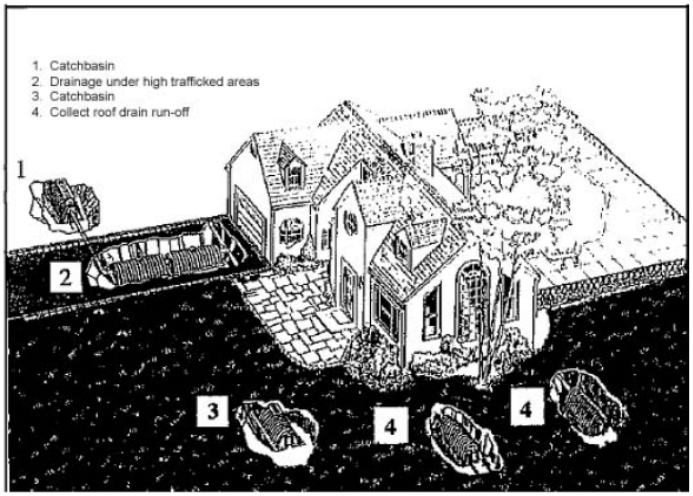

Observation Well

An observation well should be installed through the top of the first chambers of the first two rows receiving the runoff flow. The observation well will show how quickly the plastic chamber system drains following a storm, as well as provide a means of determining when maintenance is needed.

The observation wells should consist of perforated PVC pipe, 8 inches in diameter. They should be installed flush with the ground elevation of the plastic chamber system. The top of the well should be capped to discourage vandalism and tampering.

Construction Specifications

Accepted construction standards and specifications should be followed where applicable. Specifications for the work should conform to the methods and procedures indicated for installing earthwork, concrete, reinforcing steel, pipe, water gates, metal work, woodwork and masonry, as they apply to the site and the purpose of the structure. The specification should also satisfy any requirements of the local government. The use and installation of plastic chamber systems must be in conformance with all manufacturers specifications. Construction of a plastic chamber system should also be in conformance with the following:

Sequence of Construction

A plastic chamber system should not be constructed or placed into service until all of the contributing drainage area has been stabilized. Runoff from untreated, recently constructed areas within the drainage area may load the newly formed plastic chamber system and/or pretreatment facility with a large volume of fine sediment. Other devices, such as temporary inlet structure silt sacks, can be used until site stabilization is achieved.

The specifications for the construction of a plastic chamber system should state the following: 1) The earliest point at which storm drainage may be directed to the plastic chamber system, and 2) The means by which this delay in use is to be accomplished. Due to the wide variety of conditions encountered among development projects, each project should be evaluated separately to postpone the plastic chamber system use for as long as possible.

Trench Preparation

Trench excavation and preparation, stone placement, and filter fabric placement should conform to the Construction Specifications for BMP Guidance 1-A of this Manual (Infiltration Trenches) or Minimum Standard 3.10B of the VA Stormwater Management Handbook.

The trench should be excavated with a backhoe or similar device that allows the equipment to stand away from the trench bottom. This bottom surface should be scarified with the excavator bucket teeth on the final pass to eliminate any smearing or shearing of the soil surface. Similarly, the stone aggregate base should be placed on the trench bottom so that it does not compact or smear the soil surface. Clean, washed, broken hard granite-type stone, 1½ to 2 inches, should be used instead of limestone. Limestone and its associated fines, with prolonged exposure to water, tends to leave a pasty residue which retards infiltration.

Large tree roots must be trimmed flush with the trench sides to prevent the fabric from puncturing or tearing during subsequent installation procedures. No void between the filter fabric and the excavation walls should be present. If boulders or similar obstacles are removed from the excavated walls, natural soils should be placed in these voids before the filter fabric in installed. The sidewalls of the trench should be roughened where sheared and sealed by heavy equipment.

Plastic Chamber System Placement

The first chamber of each row of the plastic chamber system is placed upon the stone aggregate base and the inlet manifold system installed. Sufficient additional stone aggregate is placed around the chambers and the inlet manifold system to hold the chambers in place so that the next chamber in each row can be installed. Additional stone aggregate is then placed on these chambers to hold them in place. The process progresses until all chambers are in place and the outlet manifold, if utilized, is installed. Extra care should be taken when placing stone at the end walls at the end of each chamber row. Place stone along the centerline of the top of the end chambers to spill over the ends. Placing a large amount of stone directly against the end walls could cause them to deform.

Inlet Manifold Installation

An inlet manifold is used to disperse the runoff into the rows of the plastic chamber system. Under normal conditions, laterals are used off of the header pipe into every other row. Where large flash flows are anticipated, laterals should be placed into every row of the plastic chamber system. A minimum diameter for the laterals is 4 inches; 12-inch laterals are recommended for sites where typical flow conditions are anticipated. Some of the larger plastic chambers can accommodate up to 24-inch laterals.

Outlet Manifold Installation

An outlet manifold can be used at the down-flow end of a plastic chamber system. Construction specifications are the same as for the inlet manifold. Alternatives to an outlet manifold include placing the plastic chamber system off-line or directing chamber flow from the inlet structure at a lower elevation than the excess flow.

Stone Aggregate Fill Placement

At a minimum, place enough additional fill of the 1½ to 2 inch washed stone aggregate to just cover the chambers. The top of this fill should be level.

<u>Backfill</u>

Plastic chamber systems are typically backfilled with soil. Additional 1½ to 2 inch washed stone aggregate can also be used up to the minimum depth needed for soil to support a vegetative cover or for placement of the base for porous pavement.

<u>Surface Cover Placement</u>

In areas proposed for open space, grass, ground cover or shrubs can be used. The use of trees is not recommended to avoid possible problems with roots extending into the chambers. For areas proposed to utilize porous pavement, sufficient depth should be left for placement of the pavement base and the overlying pavement.

Observation Wells

Observation wells should be provided as specified in the design criteria. The depth of the well at the time of installation should be clearly marked on the well cap. Provisions and access for clean out should always be provided.

The following maintenance and inspection guidelines are not intended to be all-inclusive. Specific facilities may require other measures not discussed here.

Maintenance/Inspection Guidelines

The inspection schedule is the same as for **Infiltration Trench, Minimum Standard 3.10B, VA Stormwater Management Handbook** or as per manufacturer's specifications.

Sediment Control

Sediment buildup within the pretreatment structure should be monitored on the same schedule as the observation well within the trench and chamber system.

Manufacturer Contacts

StormTech, Inc. P.O. Box 619 Old Saybrook, CT 06475 Info@StormTech.com www.stormtech.com (888) 892-2694	**CULTEC, Inc.** P.O. Box 280, 878 Federal Road Brookefield, CT 06804 custservice@cultec.com www.cultec.com (800) 428-5832 or (203) 775-4416	**StormChamber** P.O. Box 672 Occoquan, VA 22125 Info@hydrologicsolutions www.hydrologicsolution.com (703) 492-0686

BMP Guidance #2-E
Filterra™ Bioretention Filter System

Definition

The Filterra™ treatment system is a manufactured bioretention stormwater best management practice (BMP) that filters stormwater runoff from impervious surfaces (roadways, parking lots and roof tops). The Filterra™ treatment system consists of a concrete container filled with an engineered soil filter media, a mulch layer, an under-drain system and a tree, shrub or other plant selection. This filtration system can be integrated into the site design of both new development and redeveloped projects. Runoff drains directly from the impervious surface, through the filter media, and then out of the container through the under drain system to be discharged to a receiving system or infiltrated into the surrounding soil.

Purpose

Filterra™ is designed to be a water quality filter device to remove a wide range of non-point source pollutants from urban runoff in the same manner as bioretention practices (refer to Minimum Standard 3.11: Bioretenion Practices). Pollutants are efficiently removed by a complex combination of physical, chemical and biological processes within the mulch, soil particles, microorganisms, and the plant materials.

Filterra™ can serve as a water quality BMP in areas where discharge of stormwater runoff into the sub-soils is not acceptable (e.g., gas stations and karst soils). An under drain system is used to convey filtered runoff to an adjacent drainage system. Where soils are permeable and ground water recharge is desirable Filterra™ can be designed to infiltrate highly treated water into the subsurface. It can be used as a filter only or as a combination filter and infiltration device. Filterra™ is generally not used for attenuation of large volumes of runoff for stream channel erosion control and flood control purposes. However, some degree of volume and flow reduction can be achieved by combining this filter system with an adjacent under ground storage and detention system (gravel trench or pipes). Such a combined system may be useful for urban retrofit projects to address problems associated with combined sewer overflows or for stream protection.

Conditions where Practice Applies

Filterra™ takes up little space (surface area or depth) and can be used in any type of urban or suburban commercial, industrial or residential development. Filterra™ is a suitable device for urban retrofit due to its flexible design, sizing criteria and concrete container and easy drop in place construction, it can be installed within the green space or streetscapes of redevelopment projects. Filterra™ can be modified to fit any curb line as a drop inlet along roadways, parking lots, or pedestrian plaza areas, See Figure 1. An adjacent drainage conveyance system is necessary in order to connect the under-drain system, and accept large storm bypass flows.

Filterra™ is designed to be used where runoff is likely to contain high concentrations of urban pollutants such as heavy metals, oil, and organics (such as gas stations, maintenance facilities and roadways). The system can be used alone or in combination with other BMP's. When used alone, pretreatment is not necessary as the system is designed to operate effectively without clogging from typical urban runoff concentrations of sediment and other particulate matter. The nature of the surface mulch and engineered filter media is such that particles become entrained into the mulch / filter media itself without clogging at the surface. The plant root system also keeps the soil open and free from clogging. As long as the manufacturer's operating and maintenance procedures are followed the filter device is projected to work for 20 years or more without replacement of the filter media or plant material.

Planning Considerations:

Site Conditions

The enclosed non-permeable concrete container makes Filterra™ suitable for situations where infiltration is undesirable or not possible. These situations would include: karst topography, high groundwater conditions, close proximity to buildings, steep slopes, contaminated soils, brownfields sites, highly contaminated runoff or where chemical or oil spills are likely (maintenance facilities, industrial and gas stations). For "hot spots" where chemical spills are likely, the system can be fitted with a valve to quickly close the discharge drain pipe isolating the spill in the concrete container and filter media for easy cleanup, removal and replacement.

Where Filterra™ is being used to provide a combination of filtration and infiltration into the adjacent soils, planning considerations should include unique site conditions such as

soil permeability, seasonal high groundwater table, depth to bedrock, karst topography, etc. Soil permeability will determine the degree to which it can be used as an infiltration device. For further discussion on planning considerations for infiltration practices, refer to the planning considerations described in the General Infiltration Practices, BMP Guidance 1 of this Manual, and Bioretention Basin Practices, Minimum Standard 3.11, VA Stormwater Management Handbook.

Developed Conditions

Filterra™ is highly adaptable and can be used for most developments. Since the filter is contained in a concrete box it can be built in and around roadways sidewalks buildings and parking lots. It can be installed on many slope conditions typical of parking lots and roadways. In highly urban areas it is possible to use it in the design of an entire streetscape converting the typical non-functional streetscape into one large vegetated filter treatment device.

Location Guidelines

Filterra™ is best incorporated into the overall site, or streetscape or parking lot landscaping plan. The individual box locations represent a combination of drainage considerations (based on final grades and water quality requirements), desired aesthetics, and minimum landscaping requirements, and must be coordinated with the design of the drainage infrastructure.

Aesthetic Considerations

Aesthetic considerations must be evaluated early in the site planning process. While topography and hydraulic considerations may dictate the general placement of each structure, overall aesthetics of the site should be integrated into the site plan and stormwater concept plan from their inception. Both the stormwater engineer and the Landscape Architect must participate during the layout of facilities and infrastructure to be placed on the site.

Sediment Control

Similar to bioretention basins and sand filters, Filterra™, if installed prior to full site stabilization and without proper inlet protection, will become choked with sediment from upland construction operations, rendering it inoperable from the outset. Simply providing inlet protection or some other filtering mechanism during construction will not adequately control the sediment. One large storm may completely clog the soil media, requiring immediate maintenance.

Filterra™ should be installed AFTER the site work is complete and stabilization measures have been implemented. (External and adjacent drainage and conveyance systems are typically built along with the site utilities and other infrastructure, and later connected to the boxes when installed. If this is not possible, strict implementation of E&S protective measures must be installed and maintained in order to protect the filter media from premature clogging and failure.

Design Criteria:

General

The design of Filterra™ shall be in accordance with manufacturers specifications. The designer is not only responsible for selecting the appropriate components for the particular design but also for ensuring long-term operation.

Soils Investigation

When infiltration into the surrounding subsoil is desired, refer to the **Planning Considerations and Design Criteria of General Infiltration Practices (BMP Guidance 1 of this Manual)**, A minimum of one soil boring log should be required for each structure where infiltration is considered.

Sizing Methodology

The designer must verify that Filterra™ has been sized and installed in accordance with the manufacturer's specifications. The distribution and sizing of the system of filters should be in accordance with the manufacturer's recommendations to achieve the most cost-effective treatment practicable while satisfying the performance-based or technology-based water quality criteria. Typical development or redevelopment streetscape or parking lot design will use minimum of one 6'x6' filter box in an off-line configuration for every ¼ of drainage area, or a combination of boxes so as to maintain a 0.33% ratio of filter surface area to drainage area.

When designing the system, consideration must be given for overflows during major storm events. Once the filter flow capacity is exceeded a backflow condition develops forcing runoff to by-pass the filter. Overflows should be diverted to a safe conveyance device (inlet, swale or green space).

Pretreatment

Pretreatment is generally not necessary as the filter's media, mulch and plant root system is designed to operate without clogging under normal conditions. Routine annual inspection and maintenance will ensure that the filter will operate for at least 20 years. Normal conditions mean a stabilized drainage area with typical concentrations of sediment and other urban pollutants. Follow the manufacturer's recommendations for unusual site conditions where high pollutant loads are expected. <u>If it is installed when there is active construction within the drainage area, the opening to the filter should be blocked off</u>. Follow the manufacturer's recommendations on protection of the filter box and media during construction activities.

<u>Observation Well and Clean-out</u>

Filterra™ is typically delivered to the site completely assembled or assembled by the manufacturer at the site. The system comes with an observation well installed that can also be used as a clean out to remove any blockages in the under drain piping.

Plant Materials

The plant materials used for Filterra™ should follow the manufacturer's recommendations. Generally, the manufacturer will provide and install the filter material and plants. The system can use typical readily available landscape plant materials. It is designed to use upland plants not wetland plants. Filterra™ provides a hydrologic regime where wetland plants will not survive and should not be used. The plants used for bioretention will also work for Filterra™. See Minimum Standard 3.11a Bioretention Basin Practices, Virginia Stormwater Management Handbook. One of the advantages of this system is that it uses commonly available nursery stock plant materials so the end user can select from a wide range of plants to also achieve aesthetic and habitat values.

The types of plants used will also determine the depth and design of the concrete container. The standard 6' x 6' box is designed to accommodate a typical shrub, herbaceous material or a very small tree. If a standard street tree is used, the filter box must be larger to accommodate the larger root system, prevent wind throw and to ensure adequate filter surface area as the tree matures. A 9' x 12' box would be the minimum size needed for most street trees. In some cases the manufacturer may recommend a customized box size and configuration to accommodate special plant requirements, unique site conditions, water quality protection goals and ensure adequate performance.

It is not recommended that one filter be used to treat very large volumes of runoff from a large drainage area. Runoff should not be detained and stored in a holding tank to be metered out to the filter media over a long period of time.

Exposing the soil, microbes and plants to prolonged and frequent flooding and wet conditions will significantly change the hydrologic regime reducing the effectiveness of the media to capture pollutants and the microbe's and plant's ability to cycle nutrients, break down organics and uptake heavy metals. Therefore, continuous or frequent flows (such as basement sump pump discharges, cooling water, condensate water, artesian wells, etc.) MUST BE EXCLUDED from routing through the system. If the filter media remains water logged for 3 or 4 days anaerobic conditions will develop dropping both oxygen and pH levels which may kill desirable soil microbes and the plants. Filterra™ is an upland system that must periodically dry out to maintain aerobic conditions to ensure the productivity and vigor of the microbes and plants. The unique filtering system approach of designing for small drainage areas and distributing the filters uniformly throughout the site ensures that the filter drains properly in about one hour to maintain aerobic conditions and enable the filter to be ready to accept the next rain storm event in just a few hours. Follow the manufacturer's recommendations on sizing and distribution of the filter boxes as deviations from the manufacturer's specifications may void any manufacturer's warranty and significantly reduce the ability of the filter to perform properly.

Construction Specifications

Accepted construction standards and specifications should be followed where applicable. Specifications and the work should conform to methods and procedures applicable to the installation of a prefabricated concrete box such as an inlet or other type container structure. The construction specification of the concrete container or use of an alternative

material for the container should comply with the recommendations of the manufacturer and all applicable standards by the local or state approval authority.

Sequence of Construction

Filterra™ can be constructed and installed at any convenient time during the construction of the site or after the installation of the site's infrastructure as a “drop in place” devise. <u>However, it should not be placed in service until the contributing drainage area has been stabilized. If the device is installed during the construction of the site’s infrastructure, the inlet opening must be protected from sediment. Follow the manufacturer’s recommendations on sediment / erosion protection.</u>

The specification for the construction of the system should state the following: 1) the earliest point at which the runoff can be safely directed to the device and 2) the means by which this “delay in usage” is to be accomplished. The timeframe of when the device will be made operational depends on a variety of unique site conditions and should be evaluated and determined on those conditions.

Excavation

When Filterra™ is to be used in conjunction with or as an infiltration device the preparation of the infiltration trench placement and type of stone used or filter fabric should conform to the **Construction Specifications for Infiltration Trenches (BMP Guidance 1-A of this Manual or Minimum Standard 3.10B, Virginia Stormwater Management Handbook).** Placement of the filter box should be on an acceptable base (gravel, sand or compacted soil) to prevent the device from settling. The filter container should be backfilled and compacted in the same manner as any pre-cast concrete structure. The under drain leaving the box and connecting to the receiving conveyance system should be appropriately supported to prevent deflection during backfilling operations and sealed at the connection points to prevent leakage.

Maintenance and Inspection Guidelines

The manufacturer provides for the inspection, care and maintenance of the Filterra™ device for the first two years. After this initial two year period, the owner or operator of the system should follow all of the manufacturer’s maintenance and inspection guidelines. In general, annual routine inspection and maintenance activities required are of a similar nature to any landscaped area and would include removal of trash, debris and sediment, replenishment of the mulch, and care or replacement of plants. The plant material requires no special care or attention once it has acclimated. Annual maintenance and care of the plants in a 6’x6’ FT may require using one bag of mulch, a hand full of all-purpose fertilizer (optional) and 20 minutes of time. Fertilization of the plants is optional since the system receives adequate nitrogen, organics and phosphorus from the runoff. During extreme droughts the plants may need to be watered in the same manner as any other landscape material. In the event of a chemical spill all of the soil and plants should be removed and properly disposed and replaced with new uncontaminated filter media and plants.

Manufacturer Contact:
Mr. Terry Siviter
Americast Inc.
Phone: 804 798 6068 / Web site: www.americastusa.com

BMP Guidance #2-F
Raintank™ Applications

Atlantis RainTank™ systems are similar to plastic chamber systems in that they can be used under parking, pervious pavers, biofilters, swales, driveways, etc., or as part of an infiltration design to provide extra storage for stormwater. This may allow for the treatment of both water quality and water quantity in one area.

The following graphics are from ACF Environmental, Inc. and illustrate several RainTank™ applications. Interested parties should contact ACF directly for technical specifications:

www.acfenvironmental.com

Figure 7C.1

Atlantis Detention Tank Plus System

Atlantis Detention Tank Plus System

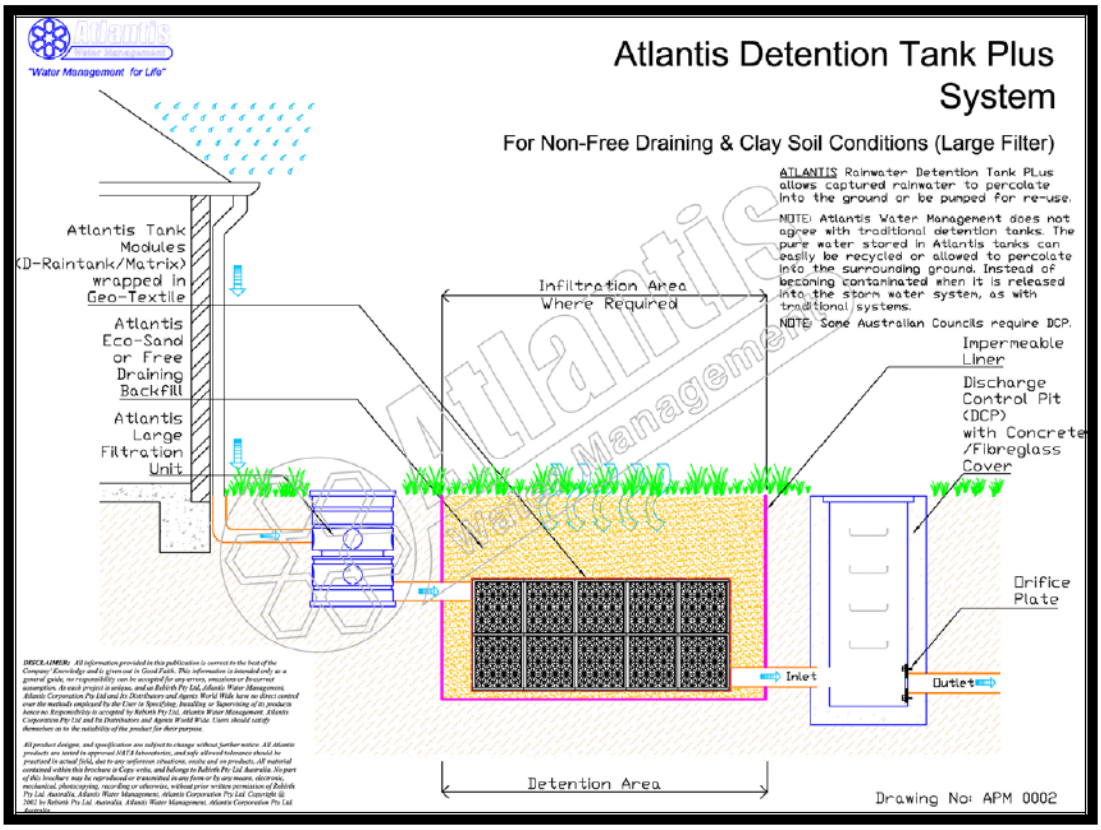

Figure 7C.2
Atlantis Matrix D-Raintank

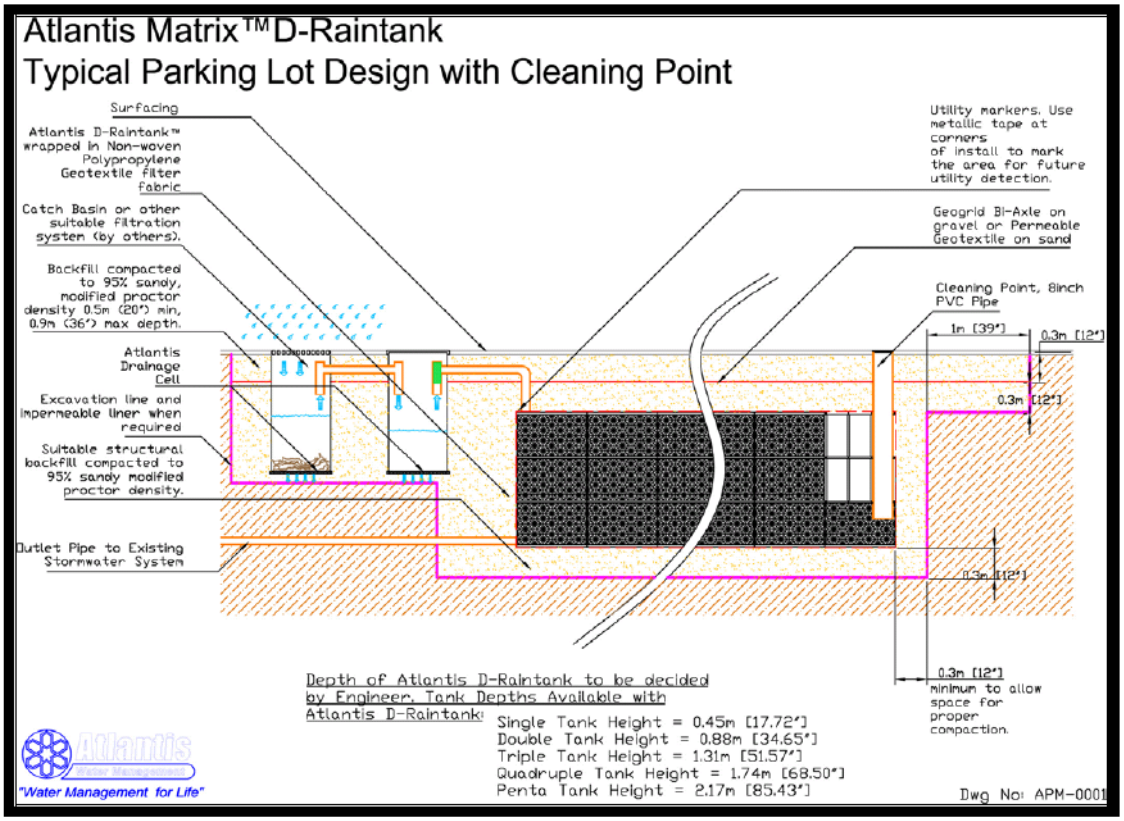

Figure 7C.3
Atlantis Grass Swale Infiltration System

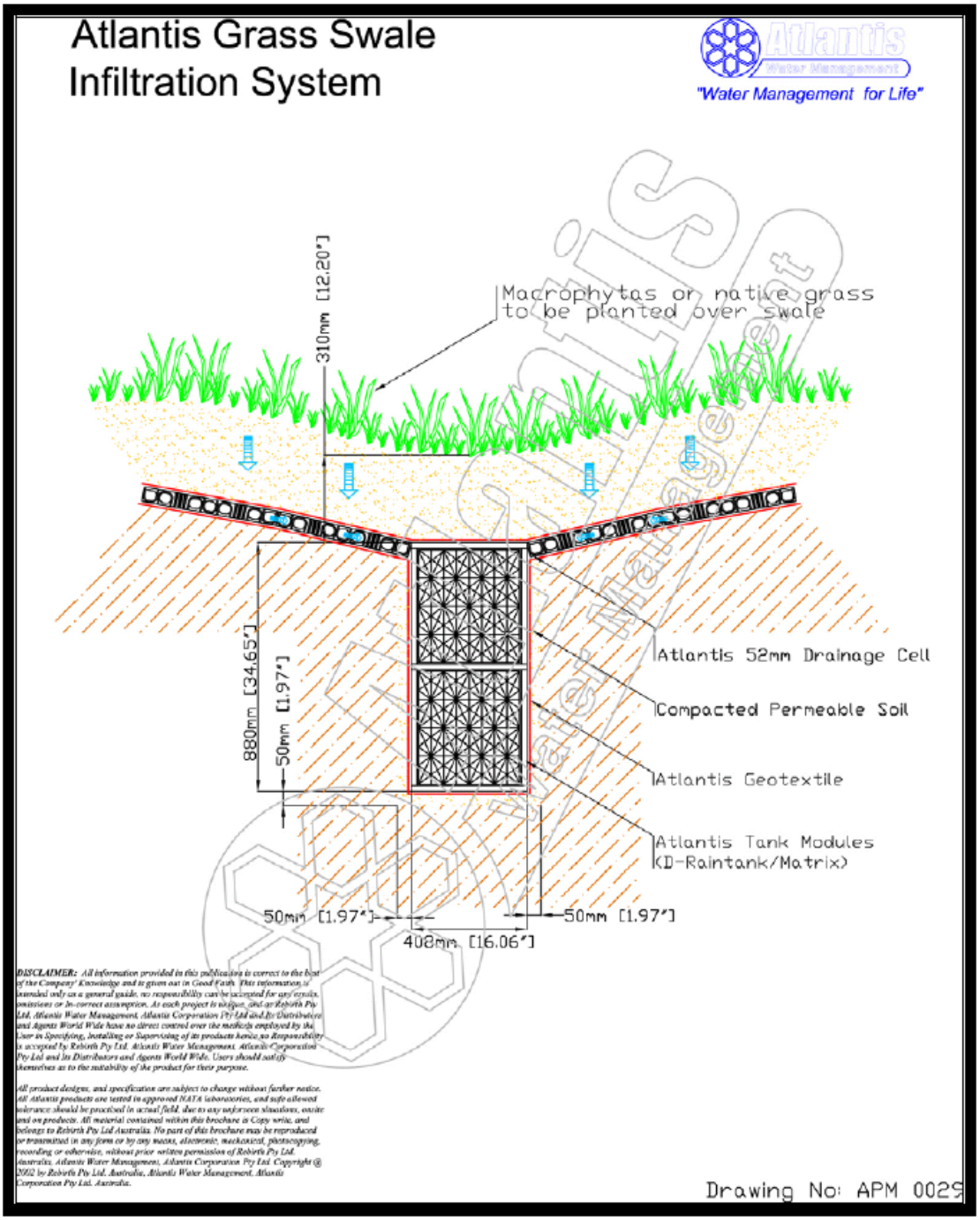

Figure 7C-4
Atlantis Detention Tank in Planter Box

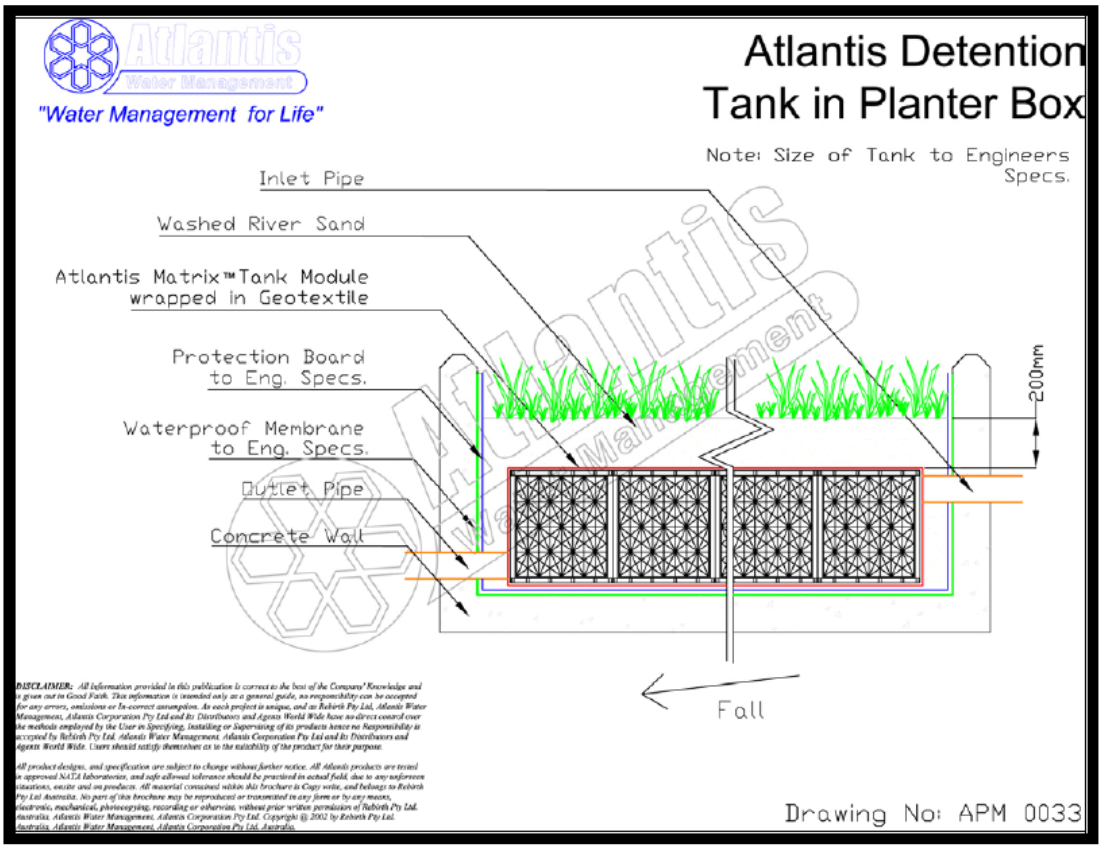

BMP Guidance #3

Detention with Water Quality Function

- **3-A: Pre-Treatment Measure – Sediment Forebay**
- **3-B: Pre-Treatment Measure – Water Quality Swale**
- **3-C: Pre-Treatment Measure – Filter Strip**
- **3-D: Retention Basin**
- **3-E: Extended Detention Basin**
- **3-F: Stormceptor™ Manufactured BMP**
- **3-G: Vortechs™ Stormwater Treatment System**
- **3-H: Downstream Defender™ Manufactured BMP**
- **3-I: StormTreat™ Manufactured BMP**
- **3-J: StormFilter™ Manufactured BMP**
- **3-K: Baysaver™ Manufactured BMP**
- **3-L: Hydro International UpFlo™ Filter Manufactured BMP**

References:

The Virginia Stormwater Management Handbook, First Edition, 1999, Volume 1, **http://www.dcr.virginia.gov/sw/stormwat.htm**

American Society of Civil Engineers. "Stormwater Detention Outlet Control Structures." Task Commission on the Design of Outlet Control Structures. New York, NY:ASCE, 1985.

Arnold, J.A., ed., D.E. Line, S.W. Coffey, and J. Spooner. Stormwater Management Guidance Manual. Raleigh, North Carolina: North Carolina Cooperative Extension Service and North Carolina Division of Environmental Management, 1993.

Brater, E.F. and H.W. King. Handbook of Hydraulics. 6th ed. New York: McGraw Hill Book Company, 1976.

Center for Watershed Protection. Design of Stormwater Filtering Systems. Silver Spring, Maryland: 1996

Chesapeake Bay Local Assistance Department (CBLAD). Local Assistance Manual: A Guide for the Development of Local Programs in Order to Comply with the Chesapeake Bay Preservation Act. Richmond, Virginia: November 1989.

Chesapeake Bay Program. Water Quality Functions of Riparian Forest Buffer Systems in the Chesapeake Bay Watershed. Technology Transfer Report CBP/TRS 134/95. Annapolis, Maryland: 1995.

Debo, T.N. and A.J. Reese. “Determining Downstream Analysis Limits for Detention Facilities.” Proceedings for NOVATECH 92, International Conference of Innovative Technologies in The Domain of Urban Storm Water Drainage. Lyon, France, 1992.
Debo, T.N. and Reese, A. J. Municipal Stormwater Management. 1995.

Dillaha, T.A., R.B. Reneau, S. Mostaghimi, and D. Lee. “Vegetative Filter Strips for Agricultural Nonpoint Source Pollution Control.” Transactions of the American Society of Agricultural Engineers. Blacksburg, Virginia: 1989.

Federal Highway Administration. “Debris-Control Structures.” Hydraulic Engineering Circular No. 9, 1971.

Federal Highway Administration. Retention, Detention and Overland Flow for Pollutant Removal from Highway Stormwater Runoff: Interim Guidelines for Management Measures. Pub. No. FHWA/RD-87/056. McLean, Virginia: March, 1988.

Galli, J. Analysis of Urban BMP Performance and Longevity in Prince George’s County, Maryland. Washington, D.C.: Metropolitan Washington Council of Governments (MWCOG), August, 1992.

James, W.P., J.F. Bell and D.L. Leslie. “Size and Location of Detention Storage,” ASCEJ of Water Resources Planning and Management, Vol. 113, No. 1, 1987.

Jones, J.E. “Multipurpose Stormwater Detention Ponds.” Public Works, 1990.
Maryland Department of Natural Resources (Md. DNR). Guidelines for Constructing Wetland Stormwater Basins. Annapolis, Maryland: Water Resources Administration, March, 1987.

Hampton Roads Planning District Commission. Vegetative Practices Guide for Nonpoint Source Pollution Management. Chesapeake, Virginia: 1992.

Maryland Department of Natural Resources (Md. DNR). Guidelines for Constructing Wetland Stormwater Basins. Annapolis, Maryland: Water Resources Administration, March, 1987.

Maryland Department of Natural Resources (Md. DNR). Wetland Basins for Stormwater Treatment; Discussion and Background. Annapolis, Maryland: Water Resources Administration, undated.

McCuen, R.H. “Design Accuracy of Stormwater Detention Basins.” Technical Report, Department of Civil Engineering, University of Maryland, 1983.

Metropolitan Washington Council of Governments. Guidance Report 1: Riparian Buffer Programs, A Guide to Developing and Implementing a Riparian Buffer Program as an Urban Stormwater Best Management Practice. Washington, District of Columbia: 1993.

Northern Virginia Planning District Commission and Engineers and Surveyors Institute. Northern Virginia BMP Handbook. Annandale, Virginia: 1992.

Perham, R.E. “Floating Debris Control: A Literature Review.” Hanover, NH: U.S. Army CREL, 13, 1987.

Poertner, H.G. “Practices in the Detention of Urban Stormwater Runoff.” American Public Works Association, OWWR Proj. C-3380, 1974.

Schueler, T.R., P.A. Kumble, and M.A. Heraty. A Current Assessment of Urban Best Management Practices. Washington, District of Columbia: Metropolitan Washington Council of Governments 1992.

Schueler, T.R. Controlling Urban Runoff: A Practical Manual for Planning and Designing Urban BMPs. Washington, D.C.: Metropolitan Washington Council of Governments, July, 1987.

Schueler, T.R. Design of Stormwater Wetland Systems: Guidelines for Creating Diverse and Effective Stormwater Wetland Systems in the Mid-Atlantic Region. Washington, D.C.: Metropolitan Washington Council of Governments, October, 1992.

Schueler, T. Level Spreader/Filter Strip System Assessed in Virginia. Watershed Protection Techniques, Vol. 1, No. 1. Silver Spring, Maryland: Center for Watershed Protection, 1994.

Schueler, T. The Architecture of Urban Stream Buffers. Watershed Protection Techniques, Vol 1, No. 4. Silver Spring, Maryland: Center for Watershed Protection, 1995.

Smith, P.H. and J.S. Cook, “Stormwater Management Detention Pond Design Within Floodplain Areas.” Trans., Res. Record 1017, 1987.

Stahre, P. and B.Urbonas. “Stormwater Detention.” Prentice Hall, 1990. State of Maryland. “Design Procedures for Stormwater Management Detention Structures.” Department of the Environment, Sediment and Stormwater Division, 1987.

The Center for Watershed Protection. Design of Stormwater Filtering Systems. Silver Spring, Maryland: 1996.

U. S. Department of the Interior, Bureau of Reclamation. Design of Small Dams. 1987.

USDA Soil Conservation Service. Engineering Field Manual. USDA Soil Conservation Service. National Engineering Handbook.

USDA Soil Conservation Service. National Engineering Handbook.
Virginia Department of Conservation and Recreation. Virginia Erosion and Sediment Control Handbook (VESCH). Richmond, Virginia: 1992.

Virginia Department of Forestry. Interim Report to the Chesapeake Bay Executive Council, EC Directive #94-1 Riparian Forest Buffers. Charlottesville, Virginia: 1995.

Washington State Department of Ecology. "Stormwater Management Manual for the Puget Sound Basin." 1992.

Wong, S.L. and R.H. McCuen. The Design of Vegetative Buffer Strips for Runoff and Sediment Control. Annapolis, Maryland: Tidewater Administration, Maryland Department of Natural Resources, 1982.

Editors Note for Manufactured Best Management Practice systems
The City of Lynchburg does not endorse one proprietary system versus another. Applicants may contact various vendors and discuss the applicability of these products for specific sites. The Manufactured Systems addressed in this section can be found at:
http://www.dcr.virginia.gov/sw/docs/swm/Chapter_3-15.pdf

BMP Guidance #3-A
Sediment Forebay

Definition

A sediment forebay is a settling basin or plunge pool constructed at the incoming discharge points of a stormwater BMP.

Purpose

The purpose of a sediment forebay is to allow sediment to settle from the incoming stormwater runoff before it is delivered to the balance of the BMP. A sediment forebay helps to isolate the sediment deposition in an accessible area, which facilitates BMP maintenance efforts.

Condition Where Practice Applies

A sediment forebay is an essential component of most impoundment and infiltration BMPs including retention, detention, extended-detention, constructed wetlands, and infiltration basins.

Planning Considerations

A sediment forebay should be located at each inflow point in the stormwater BMP. Storm drain piping or other conveyances may be aligned to discharge into one forebay or several, as appropriate for the particular site. Forebays should be installed in a location which is accessible by maintenance equipment.

Water Quality

A sediment forebay not only serves as a maintenance feature in a stormwater BMP, it also enhances the pollutant removal capabilities of the BMP. The volume and depth of the forebay work in concert with the outlet protection at the inflow points to dissipate the energy of incoming stormwater flows. This allows the heavier, course-grained sediments and particulate pollutants to settle out of the runoff. **Note that for the BMPs listed in this handbook, the target pollutant removal efficiencies have been established assuming sediment forebays are included in the design**. Therefore, no additional pollutant removal efficiency is warranted for using a sediment forebay.

Channel Erosion Control and Flood Control

An “on line” BMP designed for flood control and channel erosion control is subject to the natural bed material (sediment) load, plus any bed load increases due to higher velocities in the upstream channels. This is especially true for regional facilities where the upstream channel is used to convey the increased developed condition flows. In such cases, the sediment forebay becomes an essential facility maintenance component since it serves to simplify clean-out operations.

Studies indicate that a well-designed retention basin will function for 20 to 25 years before it needs dredging. This implies a gradual sediment accumulation process. A concern regarding stormwater basins is that the landowners will probably change at least once during that 20 to 25-year period. The new owners may not be aware of the

maintenance requirements and, may therefore, neglect to maintain the facility. Sediment will then continue to accumulate and will eventually fill the BMP pool volume.

A sediment forebay, however, is designed to trap the sediments within a confined area. This causes a more rapid sediment accumulation. Studies indicate that for a typical mixed-use watershed, sediment removal from the forebay should occur every 3 to 5 years. Despite this frequency, removal of sediment from the forebay should be less costly over the same time period than a one time cleaning of the entire basin. This is due in part to the fact that removing sediment from the forebay is a much simpler operation than that of an entire stormwater basin or pond. The sediment is confined to strategic forebay locations with easy access. Furthermore, the more frequent and less expensive schedule will likely become a regular part of the operation and maintenance efforts of the owners.

Design Criteria

The most attractive aspect of a sediment forebay is its isolation from the rest of the facility. To create this separation, an earthen berm, or a gabion, concrete, or riprap wall can be constructed along the outlet side of the forebay. A designed overflow section should be constructed on the top of the separation to allow flow to exit the forebay at non-erosive velocities during the 2-year and 10-year frequency design storms. The overflow section may be set at the permanent pool elevation or the extended-detention volume elevation. It may also be designed to serve as a spillover for the forebay if the forebay is set at a higher elevation than the second or remaining cell.

The use of an aquatic bench with emergent vegetation around the perimeter will help with water quality as well as provide a safety feature for large forebays (used on large lake BMPs or retrofits).

Volume

The sediment forebay should be sized to hold 0.25 inches of runoff per impervious acre of contributing drainage area, with an absolute minimum of 0.1 inches per impervious acre. The volume of the sediment forebay is not in addition to the required volume of the retention basin permanent pool, but rather as part of the required pool volume. For dry facilities, the forebay does not represent available storage volume if it remains full of water. A dry forebay must be carefully designed to avoid the resuspension of previously deposited sediments. The 0.1 to 0.25 impervious watershed inches is guidance for ideal performance. For smaller stormwater facilities, a more appropriate sizing criteria of 10% of the total required pool or detention volume may be more practical. This volume should be 4 to 6 feet deep to adequately dissipate turbulent inflow without resuspending previously deposited sediment (Center for Watershed Protection, 1995).

Maintenance

Direct access to the forebay should be provided to simplify maintenance. Provision of a hardened access or staging pad adjacent to the forebay is also beneficial. Such an area helps protect the forebay and basin from excessive erosion resulting from operation of the heavy equipment used for maintenance. The pad area can be hardened by installing block

pavers or similar material. Also, a hardened bottom to the forebay will help avoid over excavation during clean out operations.

In addition, a fixed, vertical, sediment depth marker should be installed in each sediment forebay to measure the sediment deposition. The sediment depth marker will allow the owner to monitor the accumulation and anticipate maintenance needs. Clean out frequency will vary depending on the conditions of the upstream watershed and the given site.

In general, sediment should be removed from the forebay every 3 to 5 years, or when 6 to 12 inches have accumulated, whichever comes first. To clean the forebay, draining or pumping and a possible temporary partial drawdown of the pool area may be required. Refer to the VESCH, 1992 edition for proper dewatering methods.

To reduce costs associated with hauling and disposing of dredged material, a designated spoil area should be approved and identified on the site during initial design and development of the project.

FIGURE 3.04 - 1
Typical Sediment Forebay Plan and Section

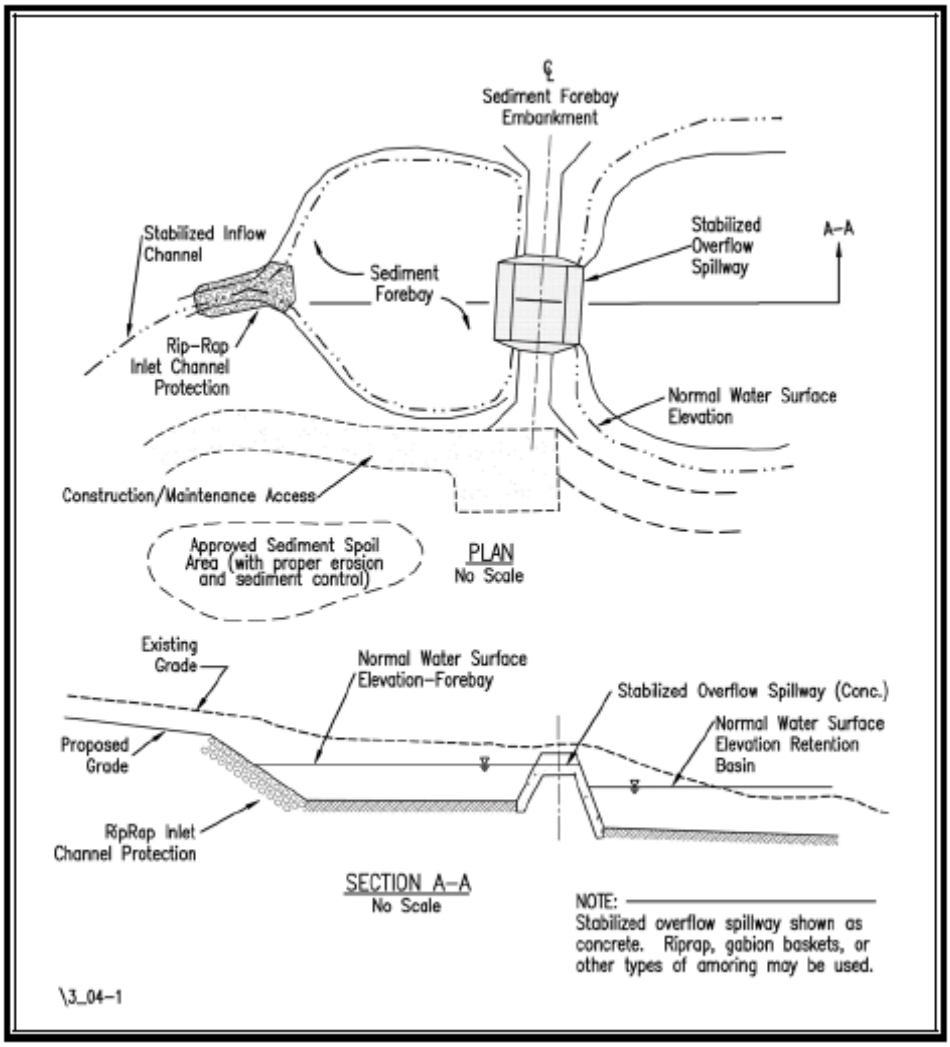

ex. Sediment Forebay constructed with earthen embankment and riprap overflow

FIGURE 3.04 - 2
Typical Sediment Forebay Sections

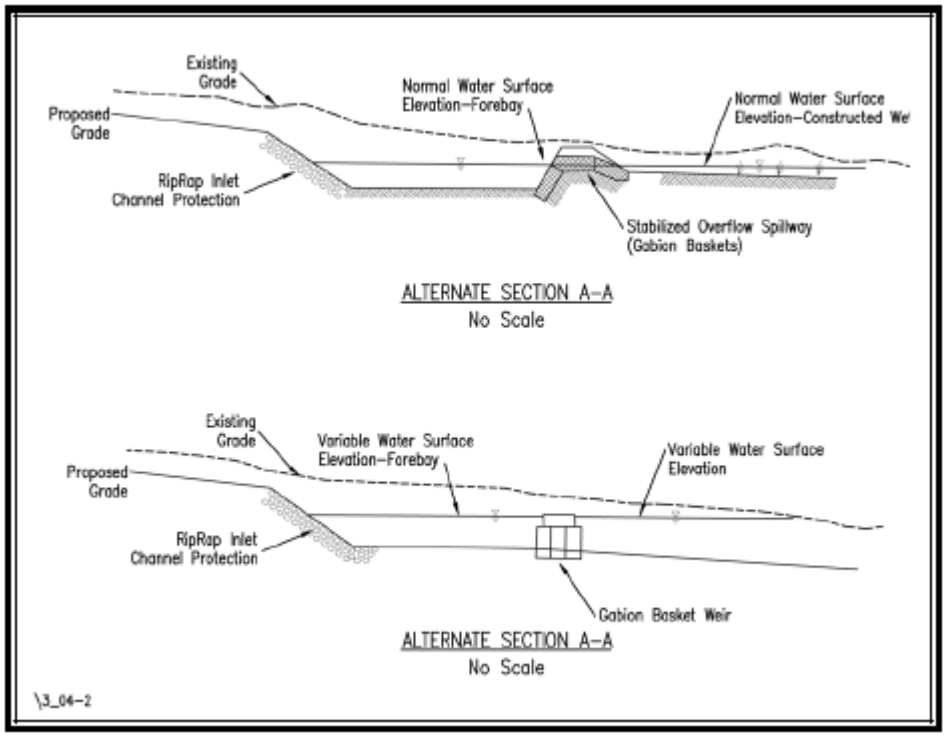

ex. Sediment Forebay constructed with submerged rip-rap weir

<u>BMP Guidance #3-B</u>
Grassed Swale/Water Quality Swale

Definition

A grassed swale is a broad and shallow earthen channel vegetated with erosion resistant and floodtolerant grasses. Check dams are strategically placed in the swale to encourage ponding behind them.

A water quality swale is a broad and shallow earthen channel vegetated with erosion resistant and flood tolerant grasses, and underlain by an engineered soil mixture.

Purpose

The purpose of grassed swales and water quality swales is to convey stormwater runoff at a nonerosive velocity in order to enhance its water quality through infiltration, sedimentation, and filtration. Check dams are used within the swale to slow the flow rate and create small, temporary ponding areas. A water quality swale is appropriate where greater pollutant removal efficiency is desired.

<u>Water Quality Enhancement</u>
Grassed swales and water quality swales remove pollution through *sedimentation*, *infiltration*, and *filtration*. Water quality swales are specifically engineered to filter stormwater through an underlying soil mixture while grasses swales are designed to slow the velocity of flow to encourage settling and filtering through the grass lining. Vegetation filters out the sediments and other particulate pollutants from the runoff and increases the opportunity for infiltration and adsorption of soluble pollutants. The flow rate becomes a critical design element, since runoff must pass through the vegetation slowly for pollutant removal to occur. Monitoring of grassed swales has indicated low to moderate removal of soluble pollutants (phosphorous and nitrogen) and moderate to high removal of particulate pollutants.

<u>Flood Control</u>
Grassed swales and water quality swales will usually provide some peak attenuation depending on the storage volume created by the check dams. However, flood control should be considered a secondary function of grassed swales since the required storage volume for flood control is usually more than they can provide.

FIGURE 3.13 - 1
Typical Grassed Swale Configuration

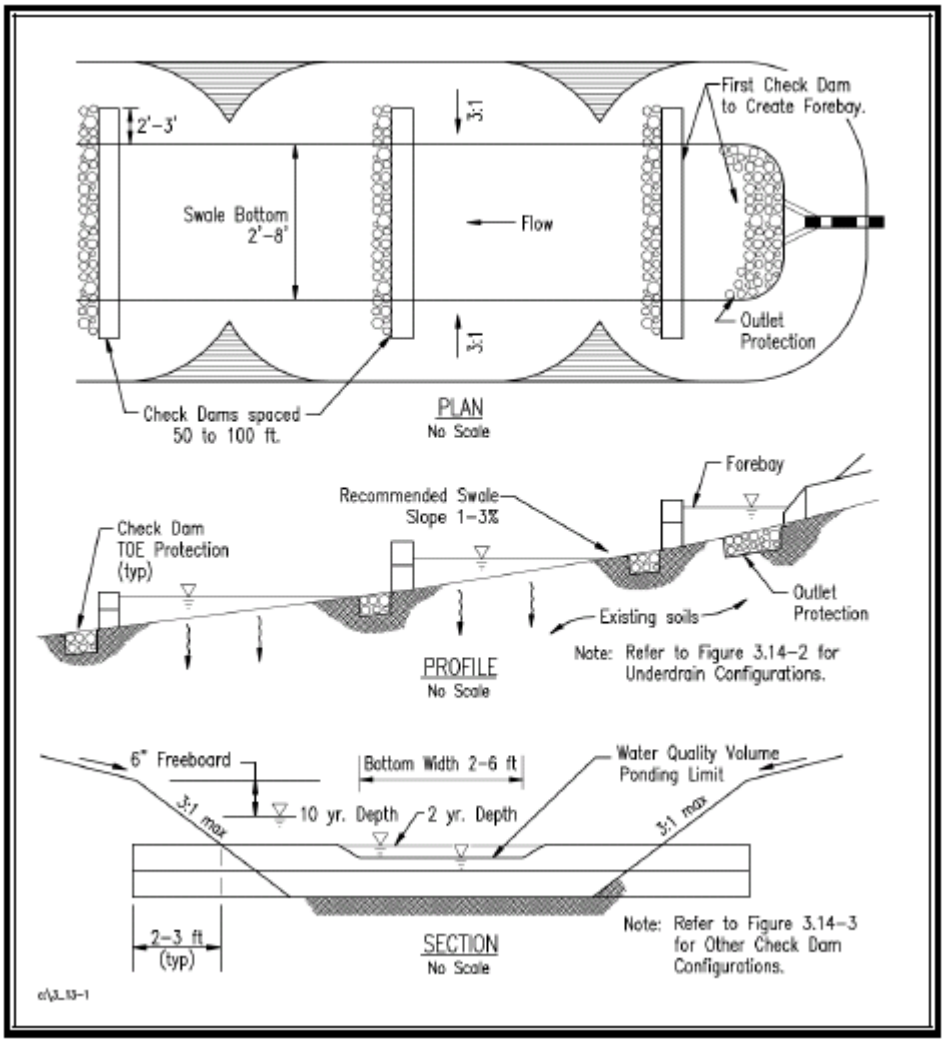

FIGURE 3.13 - 2
Typical Water Quality Swale Configuration

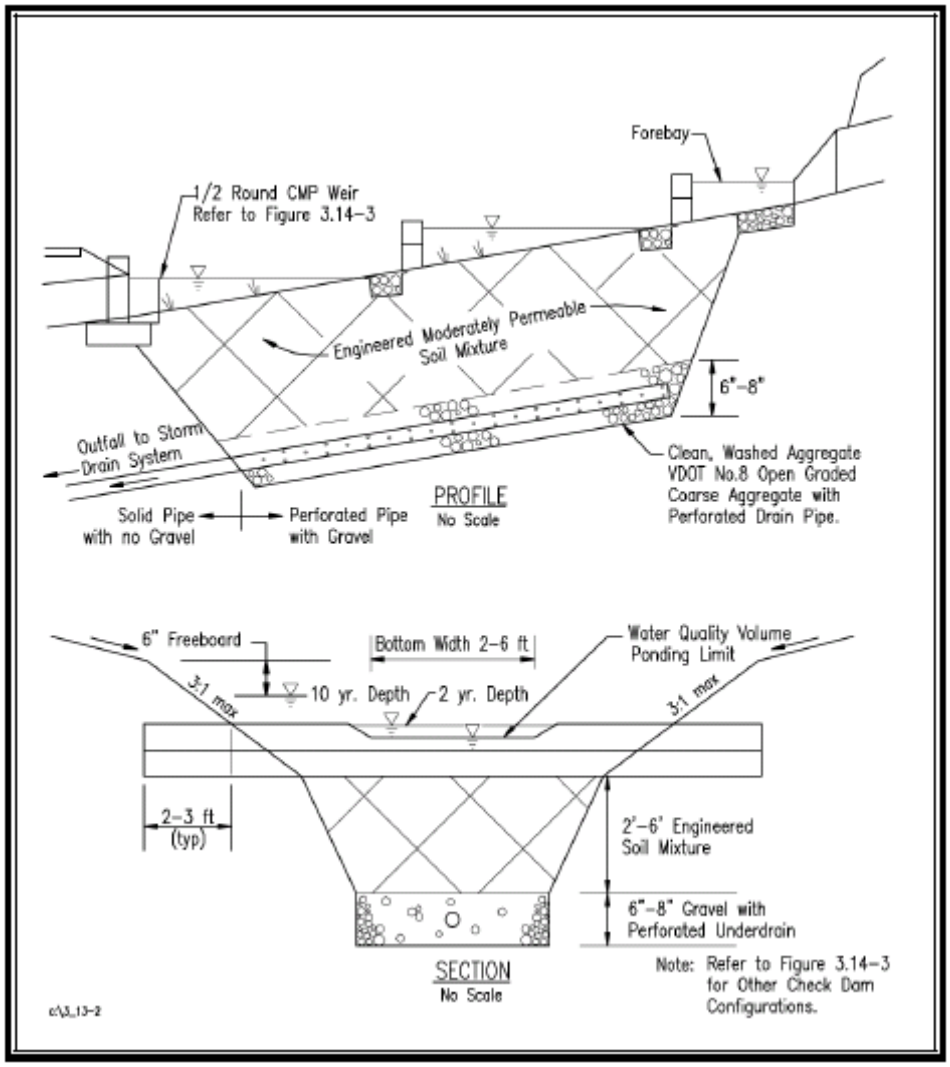

TABLE 3.13 - 1
Pollutant Removal Efficiency for Grassed Swales

Water Quality BMP Target	Phosphorus Removal Efficiency	Impervious Cover
Grassed Swale	15%	16 - 21%
Water Quality Swale	35%	16 - 37%

Channel Erosion Control
Grassed swales and water quality swales may also provide some benefits relative to channel erosion by reducing the peak rate of discharge from a drainage area. However, the holding capacity of a grassed swale designed for water quality purposes is limited.

Condition Where Practice Applies

Drainage Area
Grassed swales and water quality swales engineered for enhancing water quality cannot effectively convey large flows. Therefore, their contributing drainage areas must be kept small. The dimensions (length, width, and overall geometry) and slope of the swale, and its ability to convey the 10-year storm at a non-erosive velocity will set the size of the contributing drainage area.

Development Conditions
Grassed swales are commonly used instead of curb and gutter drainage systems in low- to moderate density (16 to 21% impervious) single-family residential developments. Since grassed swales do not function well with high volumes or velocities of stormwater, they have limited application in highly urbanized or other highly impervious areas. However, swales may be appropriate for use in these areas if they are constructed in series or as pretreatment facilities for other BMPs.

Grassed swales are usually located within the right-of-way when used to receive runoff from subdivision or rural roadways. They may also be installed within drainage easements along the side or rear of residential lots. Grassed swales can be strategically located within the landscape to intercept runoff from small impervious surfaces (small parking lots, rooftops, etc.) as a component of a subdivision-wide or development-wide BMP strategy.

Water quality swales are appropriate for the same development conditions as those listed for grassed swales with the addition of higher densities of development (16 - 37% impervious) due to the increased pollutant removal capability.

Planning Considerations

Figure 3.13-1 pesents a grassed swale designed to hold small pockets of water behind each check dam. The water slowly drains through small openings in the chack dam and/or infiltrates into the ground. Slow channel velocities allow the vegetation to filter out sediments and other particulate pollutants from the runoff and increase the opportunity for infiltration and adsorption of soluble pollutants.

Figure 3.13-2 presents a water quality swale with an engineered soils media directly under the swale, with an underdrain. This design may be used in areas where the soils are not conducive to infiltration, or in developments where the swale is constructed beside a roadway using fill or compacted soils.

Site Conditions

The following items should be considered when selecting a grassed swale as a water quality BMP:

1. **Soils –** Grassed swales can be used with soils having moderate infiltration rates of 0.27 inches per hour (silt loam) or greater. Besides permeability, soils should support a good stand of vegetative cover with minimal fertilization. Water quality swales can be used in areas of unsuitable soil conditions for infiltration since the engineered soil mixture and underdrain system is used in place of the insitu soils.

2. **Topography –** The topography of the site should be relatively flat so that the swale can be constructed with a slope and cross-section that maintains low velocities and creates adequate storage behind the check dams.

3. **Depth to water table –** A shallow or seasonally-high groundwater table will inhibit the opportunity for infiltration. Therefore, the bottom of the swale should be at least 2 feet above the water table.

Sediment Control

Grassed swales may be used for conveyance of stormwater runoff during the construction phase of development. However, the swales should be maintained as required by the Virginia Erosion and Sediment Control Regulations and local program requirements. Before final stabilization, sediment must be removed from the swales and the soil surface prepared for final stabilization. Tilling of the swale bottom may be needed to open the surface pores and re-establish the soil's permeability. Water quality swales should be constructed after a majority of the drainage area has been stabilized.

Design Criteria

The design of a water quality grassed swale includes calculations for traditional swale parameters (flow rate, maximum permissible velocities, etc.) along with storage volume calculations for the water quality volume.

Hydrology

The hydrology of a grassed swale's contributing drainage area should be developed per **Chapter 4, Hydrologic Methods, of the Virginia Stormwater Management Handbook**.

Swale Geometry

A grassed swale should have a trapezoidal cross-section to spread flows across its flat bottom. Triangular or parabolic shaped sections will concentrate the runoff and should be

avoided. The side slopes of the swale should be no steeper than 3H:1V to simplify maintenance and to help prevent erosion.

Bottom Width

The bottom width of the swale should be 2 feet minimum and 6 feet maximum in order to maintain sheet flow across the bottom and to avoid concentration of low flows. The actual design width of the swale is determined by the maximum desirable flow depth, as discussed below.

Flow Depth

The flow depth for a water quality grassed swale should be approximately the same as the height of the grass. An average grass height for most conditions is 4 inches. Therefore, the maximum flow depth for the water quality volume should be 4 inches (Center for Watershed Protection, 1996).

Flow Velocity

The maximum velocity of the water quality volume through the grassed swale should be no greater than 1.5 feet per second. The maximum design velocity of the larger storms should be kept low enough so as to avoid resuspension of deposited sediments. The 2-year storm recommended maximum design velocity is 4 feet per second and the 10-year storm recommended maximum design velocity is 7 feet per second.

Longitudinal Slope

The slope of the grassed swale should be as flat as possible, while maintaining positive drainage and uniform flow. The minimum constructable slope is between 0.75 and 1.0%. The maximum slope depends upon what is needed to maintain the desired flow velocities and to provide adequate storage for the water quality volume, while avoiding excessively deep water at the downstream end. Generally, a slope of between 1 and 3% is recommended. The slope should never exceed 5%.

Swale length

Swale length is dependent on the swale's geometry and the ability to provide the required storage for the water quality volume.

Swale Capacity

The capacity of the grassed swale is a combined function of the flow volume (the water quality volume) and the physical properties of the swale such as longitudinal slope and bottom width. By using the Manning equation or channel flow nomographs, the depth of flow and velocity for any given set of values can be obtained. The Manning's '*n*' value, or roughness coefficient, varies with the depth of flow and vegetative cover. An '*n*' value of 0.15 is appropriate for flow depths of up to 4 inches (equal to the grass height). The *n* value decreases to a minimum of 0.03 for grass swales at a depth of approximately 12 inches.

A grassed swale should have the capacity to convey the peak flows from the 10-year design storm without exceeding the maximum permissible velocities. (Note that a

maximum velocity is specified for the 2-year and 10-year design storms to avoid resuspension of deposited sediments and other pollutants and to prevent scour of the channel bottom and side slopes.) The swale should pass the 10-year flow over the top of the check dams with 6 inches, minimum, of freeboard. As an alternative, a bypass structure may be engineered to divert flows from the larger storm events (runoff greater than the water quality volume) around the grassed swale. However, when the additional area and associated costs for a bypass structure and conveyance system are considered, it may be more economical to simply increase the bottom width of the grassed swale. It should then be designed to carry runoff from the 10-year frequency design storm at the required permissible velocity.

The longitudinal slope and the bottom width may be adjusted to achieve the maximum allowable velocity according to the Manning equation:

$$Q = \left[\frac{1.49}{n} r^{2/3} s^{1/2}\right] A$$

Where: Q = peak flow rate, cfs
n = Manning's roughness coefficient
r = hydraulic radius, ft. = A / wp
s = longitudinal slope of the channel
A = cross-sectional area of the channel, ft^2

The portion of the equation within the brackets represents the velocity of flow. This equation can be rewritten as the Continuity equation:

$$Q = VA$$

Where: Q = peak flow rate, cfs
V = flow velocity, ft/s =
A = cross-sectional area of the channel, ft^2.

Additional guidance on the use of the Manning equation for the design of grassed swales is provided in the Virginia Erosion and Sediment Control Handbook (VESCH), 1992 edition.

<u>Water Quality Volume</u>
If a grassed swale is used as a conveyance channel, its purpose is to transport stormwater to the discharge point. However, the purpose of a water quality grassed swale is to slow the water as much as possible to encourage pollutant removal.

The use of check dams will create segments of the swale which will be inundated for a period of time. The required total storage volume behind the check dams is equal to the water quality volume for the contributing drainage area to that point. However, the maximum ponding depth behind the check dams should not exceed 18 inches. To insure that this practice does not create nuisance conditions, an analysis of the subsoil should be conducted to verify its permeability.

Underlying Soil Bed - Water Quality Swales

An underlying engineered soil bed and underdrain system may be utilized in areas where the soils are not permeable and the swale would remain full of water for extended periods of time (creating nuisance conditions). This soil bed should consist of a moderately permeable soil material with a high level of organic matter: 50% sand, 20% leaf mulch, 30% top soil. The soil bed should be 30 inches deep and should be accompanied by a perforated pipe and gravel underdrain system.

In residential developments with marginal soils, it may be appropriate to provide a soil bed and underdrain system in all grassed swales to avoid possible safety and nuisance concerns.

Check Dams

The use of check dams in a grassed swale should be per the following criteria:

1. **Height –** A maximum height of 18 inches is recommended, and the dam height should not exceed one-half the height of the swale bank.
2. **Spacing –** Spacing should be such that the slope of the swale and the height of the check dams combine to provide the required water quality volume behind the dams.
3. **Abutments –** Check dams should be anchored into the swale wall a minimum of 2 to 3 feet on each side.
4. **Toe Protection –** The check dam toe should be protected with riprap placed over a suitable geotextile fabric. The size (D_{50}) of the riprap should be based on the design flow in the swale. Class A1 Riprap is recommended.
5. **Overflow –** A notch should be placed in the top of the check dam to allow the 2-year peak discharge to pass without coming into contact with the check dam abutments, or the abutments may be protected with a non-erodible material. Six inches of freeboard should be provided between the 10-year overflow and the top of the swale.
6. **Riprap check dams –** Rip rap check dams should consist of a VDOT No. 1 Open-graded Coarse Aggregate core keyed into the ground a minimum of 6 inches, with a Class A1 riprap shell.
7. **Filter fabric –** Filter fabric is required under riprap and gabion check dams.
8. **Driveway culvert weirs –** Where a driveway culvert is encountered, a ½ round corrugated metal pipe weir bolted to the concrete driveway headwall may be utilized as a check dam, or a timber check dam placed at least one foot upstream of the culvert opening.

Outlets

Discharges from grassed swales must be conveyed at non-erosive velocities to either a stream or a stabilized channel to prevent scour at the outlet of the swale. Refer to VESCH, 1992 edition for design procedures and specifications regarding outlet stabilization.

Inflow Points
Swale inflow points should be protected with erosion controls as needed (e.g., riprap, flow spreaders, energy dissipators, sediment forebays, etc.).

Vegetation
A dense cover of water-tolerant, erosion-resistant grass or other vegetation must be established.
Grasses used in swales should have the following characteristics:

- a deep root system to resist scouring,
- a high stem density, with well-branched top growth,
- tolerance to flooding,
- resistance to being flattened by runoff, and
- an ability to recover growth following inundation.

Recommended grasses include, but are not limited to, the following: Kentucky-31 tall fescue, reed canary grass, redtop, and rough-stalked blue grass. Note that these grasses can be mixed.

The selection of an appropriate vegetative lining for a grassed swale is based on several factors including climate, soils, and topography. For additional information, refer to STD. & SPEC. 3.32: Permanent Seeding in VESCH, 1992 edition.

Erosion control matting should be used to stabilize the soil before seed germination. This protects the swale from erosion during the germination process. In most cases, the use of sod is warranted to provide immediate stabilization on the swale bottom and/or side slopes. Refer to STD. & SPEC. 3.33: Sodding in VESCH, 1992 edition for additional information.

Construction Specifications

Overall, widely accepted construction standards and specifications, such as those developed by the USDA Soil Conservation Service or the U. S. Army Corps of Engineers, should be followed where applicable. Further guidance can be found in the NRCS Engineering Field Manual. Specifications for the work should conform to the methods and procedures specified for earthwork, concrete, reinforcing steel, woodwork and masonry, as they apply to the site, the purpose of the structure; specifications must also satisfy any requirements of the City.

Sequence of Construction
The construction of grassed swales should be coordinated with the overall project construction schedule. The swale may be excavated during the rough grading phase of the project to permit use of the excavated material as fill in earthwork areas. Otherwise, grassed swales should not be constructed or placed into service until the entire contributing drainage area has been stabilized. Runoff from untreated, recently constructed areas may load the newly formed swale with a large volume of fine sediment. This could seriously impair the swale's natural infiltration ability. The specifications for construction of a grassed swale should state the following:

- the earliest point in progress when storm drainage may be directed to the swale, and
- the means by which this delay in use will be accomplished.

Due to the wide variety of conditions encountered among projects, each project should be evaluated separately evaluated to decide how long to delay use of the swale.

Excavation

Initially, the swale should be excavated to within one foot of its final elevation. Excavation to the finished grade should be deferred until all disturbed areas in the watershed have been stabilized or protected. The final phase of excavation should remove all accumulated sediment. When final grading is completed, the swale bottom should be tilled with rotary tillers or disc harrows to provide a well-aerated, highly porous surface texture.

Vegetation

Establishing dense vegetative cover on the swale side slopes and floor is required. This cover will not only prevent erosion and sloughing, but will also provide a natural means to maintain relatively high infiltration rates. Selection of suitable vegetative materials and application of required fertilizer and mulch should be
per VESCH, 1992 edition.

Materials

1. **Check dams** – Check dams shall be constructed of a non-erosive material such as wood, gabions, riprap, or concrete. All check dams shall be underlaid by filter fabric per Std. & Spec 3.19: Rip Rap of VESCH, 1992 edition.

a. *Wood* - pressure treated logs or timbers, or water-resistant tree species such as cedar, hemlock, swamp oak or locust.

b. *Gabions* - hexagonal triple twist mesh with PVC coated galvanized steel wire. The maximum linear dimension of the mesh opening shall not exceed 4.5 inches. The area of the mesh opening shall not exceed 10 square inches. Stone or riprap for gabions shall be sized according to **Table 3.13-2**. It shall consist of field stone or rough unhewn quarry stone. The stone shall be hard and angular and of a quality that will not disintegrate with exposure to water or weathering. The specific gravity of the individual stones shall be at least 2.5.

c. *Riprap* - all riprap shall conform with VESCH Std. & Spec 3.19: Riprap, and VDOT Standards for open graded course aggregate.

d. *Concrete* - All concrete shall conform with VDOT or SCS specifications.

2. **Underlying soil medium** – The underlying soils should consist of the following:

a. *Soil* - USDA *ML*, *SM*, or *SC*.

b. *Sand* - ASTM C-33 fine aggregate concrete sand; VDOT fine aggregate, grading A or B.

3. **Pea Gravel** – Pea gravel should consist of washed ASTM M-43; VDOT No. 8 Open-graded Course Aggregate.

4. **Underdrain** – An underdrain system below the swale bottom shall consist of the following:

a. *Gravel* - AASHTO #7, ASTM M-43, VDOT No. 3 Open-graded Course Aggregate.

b. *PVC Pipe* - AASHTO M-278, 4-inch rigid schedule 40, perforations of 3/8-inch diameter at 6-inch centers, 4 holes per row.

c. *Filter fabric* - shall be per specifications found in VESCH, 1992 edition.

TABLE 3.13 - 2

Stone or Riprap Sizes for Gabion Baskets

Basket Thickness		**Stone Size *(in.)***
(in.)	***(mm.)***	
6	150	3-5
9	225	4-7
12	300	4-7
18	460	4-7
36	910	4-12

Maintenance and Inspection Guidelines

Maintenance of grassed swales includes upkeep of the vegetative cover and preservation of the swale's hydraulic properties. Individual land owners can usually carry out the suggested maintenance procedures for the swale or the portion of the swale on their property. To ensure continued long term maintenance, all affected landowners should be made aware of their maintenance responsibilities, and maintenance agreements should be included in land titles.

The following maintenance and inspection guidelines are not intended to be all-inclusive. Specific swales may require other measures not discussed here. It is the engineer's responsibility for determining if any additional items are necessary.

Vegetation

A dense and vigorous grass cover should be maintained in a grassed swale. This will be simplified if the proper grass type is selected in the design. Periodic mowing is required to keep the swale operating properly. Grass should never be cut to a height less than 3 inches. Ideally, a grass stand of 6 inches is most effective. Stabilization and reseeding of bare spots should be performed, as needed.

Check Dams

Properly constructed check dams should require very little maintenance since they are made of nonerodible materials. Periodic removal of sediment accumulated behind the check dams should be performed, as needed.

Debris and Litter Removal

The accumulation of debris (including trash, grass clippings, etc.) in the swale can alter the hydraulics of the design and lead to additional maintenance costs. Debris can also alter the flow path along the swale bottom causing low flows to concentrate and result in

erosion of the swale bottom. As with any BMP, frequent inspections by the land owner will help prevent small problems from becoming larger.

Sediment Removal

The sediment that accumulates within the swale should be manually removed and the vegetation reestablished. If accumulated sediment has clogged the surface pores of the swale, reducing or eliminating the infiltration capacity, then the surface should be tilled and restabilized. Drilling or punching small holes into the surface layer can be used instead of tilling, if desired.

FIGURE 3.13 - 3

Typical Check Dam Configurations

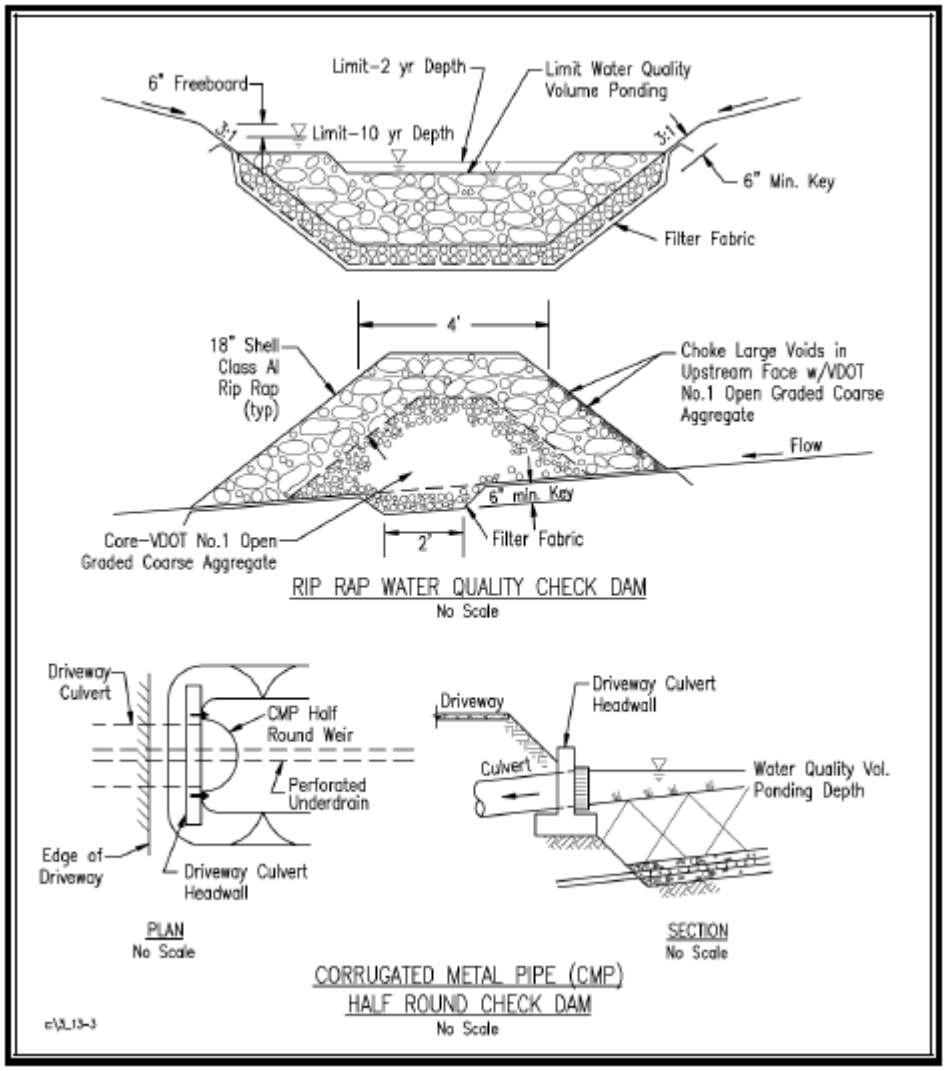

FIGURE 3.13 - 4
Manning's 'n' Values for Varying Depths of Flow

Design Procedures

The following design procedure represents a generic list of the steps typically required for the design of a *water quality grassed swale*.

1. Determine if the anticipated development conditions and drainage area are appropriate for a water quality grassed swale BMP.
2. Determine if the soils (permeability, bedrock, Karst, etc.) and topographic conditions (slopes, existing utilities, environmental restrictions) are appropriate for a grassed swale BMP.
3. Determine any additional stormwater management requirements (channel erosion, flooding) for the project.
4. Locate the grassed swale BMP(s) on the site.
5. Determine the hydrology and calculate the 2-year and 10-year peak discharges (**Chapter 4, Hydrologic Methods, SWMH**), and the water quality volume for the contributing drainage area.
6. Approximate the geometry of the grassed swale and evaluate water quality parameters: water quality depth of flow (recommended maximum of 4 inches), and storage volume behind check dams (water quality volume). Adjust swale geometry and re-evaluate as needed.
7. Evaluate the grassed swale geometry for the the 2-year design storm peak discharge velocity (4 feet per second), and capacity (check dam overflow), and the 10-year design storm peak discharge velocity (7 feet per second) and capacity (6 inches of freeboard). (**Chapter 5, Engineering Calculations**). Adjust swale geometry and re-evaluate as needed.
8. Establish specifications for appropriate permanent vegetation on the bottom and side slopes of the grassed swale.
9. Establish specifications for sediment control.

10. Establish construction sequence and construction specifications.
11. Establish maintenance and inspection requirements.

Grass Swale. Note stone check dam in front of inlet creates shallow ponding area to encourage infiltration and settling.

Grass Swale through residential area. Note flat slope to encourage infiltration – ponding water gone within hours of runoff producing

Grass Swale with Check Dams. Note significant channel storage capacity created by check dams. Notched center allows safe overflow without scour around sides.

BMP Guidance #3-C
Vegetated Filter Strip

Definition

A vegetated filter strip is a densely vegetated strip of land engineered to accept runoff from upstream development as *overland sheet flow*. It may adopt any naturally vegetated form, from grassy meadow to small forest.

Purpose

The purpose of a vegetated filter strip is to enhance the quality of stormwater runoff through filtration, sediment deposition, infiltration and absorption.

A vegetated filter strip may be used as a pretreatment BMP in conjunction with a primary BMP. This reduces the sediment and particulate pollutant load that could reaching the primary BMP, which, in turn, reduces the BMP's maintenance costs and enhances its pollutant removal capabilities.

TABLE 3.14 - 1
Pollutant Removal Efficiency for Vegetated Filter Strips

BMP	Target Phosphorus Removal Efficiency	Impervious Cover
Vegetated Filter Strip	10%	16-21%

Vegetated filter strips rely on their flat cross-slope and dense vegetation to enhance water quality. Their flat cross-slope assures that runoff remains as sheet flow while filtering through the vegetation. There is limited ponding or storage associated with these BMPs, so they are ineffective for reducing peak discharges. Vegetated filter strips may lower runoff velocities and, sometimes, runoff volume. Typically, however, the volume reduction is not adequate for controlling stream channel erosion or flooding.

Conditions Where Practice Applies

Drainage Area

A vegetated filter strip should not receive large volumes of runoff since such flows tend to concentrate and form channels. Channels within a filter strip allow runoff to short-circuit the BMP, rendering it ineffective. Therefore, the contributing drainage area for a vegetated filter strip is based on the linear distance behind it that is maintained as sheet flow. Runoff is assumed to change from sheet flow to shallow concentrated flow after traveling 150 feet over **pervious** surfaces and 75 feet over **impervious** surfaces (Center for Watershed Protection, 1996). A level spreader may be used to convert shallow concentrated flow from larger areas back to sheet flow before it enters the filter strip. In any event, the contributing drainage area should never exceed five acres.

Development Conditions

Vegetated filter strips have historically been used and proven successful on agricultural lands, primarily due to their low runoff volumes. In urban settings, filter strips are most effective in treating runoff from isolated impervious areas such as rooftops, small parking

areas, and other small impervious areas. Filter strips should not be used to control large impervious areas.

Since vegetated filter strips should not be used to treat concentrated flows, they are suitable only for low- to medium-density development (16-21% impervious), or as a pretreatment component for structural BMPs in higher density developments.

Planning Considerations

Site Conditions

The following site conditions should be considered when selecting a vegetated filter strip as a water quality BMP:

1. **Soils –** Vegetated filter strips should be used with soils having an infiltration rate of 0.52 inches/hour; (sandy loam, loamy sand). Soils should be capable of sustaining adequate stands of vegetation with minimal fertilization.
2. **Topography –** Topography should be relatively flat to maintain sheet flow conditions. Filter strips function best on 5 percent or less (NVPDC).
3. **Depth of Water Table –** A shallow or seasonally high groundwater table will inhibit the opportunity for infiltration. Therefore, the lowest elevation in the filter strip should be at least 2 feet above the water table.

If the soil's permeability and/or depth to water table are unsuitable for infiltration, the filter strip's primary function becomes the filtering and settling of pollutants. A modified design may be provided to allow ponding of the water quality volume at the filter's downstream end. The ponding area may be created by constructing a small permeable berm using a select soil mixture. (For berm details, see the Pervious Berm section in this standard.) The maximum ponding depth behind the berm should be 1foot.

Water Quality Enhancement

Vegetated filter strips are occasionally installed as a standard feature in residential developments. To be used as a water quality BMP, however, filter strips must comply with certain design criteria. Vegetated filter strip designs should include specific construction, stabilization, and maintenance specifications. The most significant requirement is for runoff to be received as sheet flow. Certain enhancements may be necessary, such as added vegetation and grading specifications, or the use of level spreaders, to ensure that runoff enters the filter strip as sheet flow.

Sediment Control

A natural area that is designed to serve as a vegetated filter strip should not be used for temporary sediment control. Sediment deposition may have significant impacts on the existing vegetation. If a vegetated filter strip is proposed in a natural area marginally acceptable for use, due to topography or existing vegetation, then it may be appropriate to use the filter strip for temporary sediment control. However, when the project is completed, the sediment accumulation should be removed, the area should be regraded to create the proper design conditions (sheet flow), and the strip should be re-stabilized per the landscaping plan.

Design Criteria

This section provides recommendations and minimum design criteria for vegetated filter strips intended to enhance water quality. It is the designer's responsibility to decide which criteria are applicable to the each facility and to decide if any additional design elements are required. The designer must also provide for the long-term functioning of the BMP.

Hydrology

The hydrology of a filter strip's contributing drainage area should be developed per **Chapter 4, Hydrologic Methods, Virginia Stormwater Management Handbook**.

Filter Strip Geometry

Compliance with the following parameters will result in optimal filter strip performance (NVPDC):

1. **Length** – The minimum length of a filter strip should be 25 feet, at a maximum slope of 2 percent. The length should increase by 4 feet for any 1 percent increase in slope. **The optimum filter strip length is 80 to 100 feet**.
2. **Width** – The width of the filter strip (perpendicular to the slope) should be equal to the width of the contributing drainage area. When this is not practical, a level spreader should be used to reduce the flow width to that of the filter strip. The level spreader's width will determine the depth of flow and runoff velocity of the stormwater as it passes over the spreader lip and into the filter strip. A wide lip will distribute the flow over a longer level section, which reduces the potential for concentrated flow across the filter.
3. Slope – The slope of the filter strip should be as flat as possible while allowing for drainage. Saturation may occur when extremely flat slopes are used.

Level Spreader

A level spreader should be provided at the upper edge of a vegetated filter strip when the width of the contributing drainage area is greater than that of the filter (see Figure **3.14-2**.) Runoff may be directed to the level spreader as sheet flow or concentrated flow. However, the design must ensure that runoff fills the spreader evenly and flows over the level lip as uniformly as possible. The level spreader should extend across the width of the filter, leaving only 10 feet open on each end.

Pervious Berm

To force ponding in a vegetated filter strip, a pervious berm may be installed. It should be constructed using a moderately permeable soil such as ASTM *ML*, *SM*, or *SC*. Soils meeting USDA sandy loam or loamy sand texture, with a minimum of 10 to 25% clay, may also be used. Additional loam should be used on the berm (± 25%) to help support vegetation. An armored overflow should be provided to allow larger storms to pass without overtopping the berm. **Maximum ponding depth behind a pervious berm is 1 foot**.

Vegetation

A filter strip should be densely vegetated with a mix of erosion resistant plant species that effectively bind the soil. Certain plant types are more suitable than others for urban stormwater control. The selection of plants should be based on their compatibility with climate conditions, soils, and topography and the their ability to tolerate urban stresses from pollutants, variable soil moisture conditions and ponding fluctuations. Virginia has three major physiographic regions that reflect changes in soils and topography: Coastal Plain, Piedmont, and Appalachian and Blue Ridge regions (see **Figure 3.14- 3**).

A filter strip should have at least two of the following vegetation types:

- *deep-rooted grasses, ground covers, or vines*
- *deciduous and evergreen shrubs*
- *under- and over-story trees*

Native plant species should be used if possible. Non-native plants may require more care to adapt to local hydrology, climate, exposure, soil and other conditions. Also, some non-native plants may become invasive, ultimately choking out the native plant population. This is especially true for nonnative plants used for stabilization.

Newly constructed stormwater BMPs will be fully exposed for several years before the buffer vegetation becomes adequately established. Therefore, plants which require full shade, are susceptible to winter kill or are prone to wind damage should be avoided.

Plant materials should conform to the American Standard for Nursery Stock, current issue, as published by the American Association of Nurserymen. The botanical (scientific) name of the plant species should be according to the landscape industry standard nomenclature. All plant material specified should be suited for USDA Plant Hardiness Zones 6 or 7 (see **Figure 3.14- 4**).

Construction Specifications

Overall, widely accepted construction standards and specifications, such as those developed by the USDA Natural Resource Conservation Service or the U.S. Army Corps of Engineers, should be followed where applicable to construct a vegetated filter strip; specifications must also satisfy all requirements of the City.

Sequence of Construction

Vegetated filter strip construction should be coordinated with the overall project construction schedule. Rough grading of the filter strip should not be initiated until adequate erosion controls are in place.

Soil Preparation

Topsoil should be 8 inches thick, minimum. If grading is necessary, the topsoil should be removed and stockpiled. If the subsoil is either highly acidic or composed of heavy clays, ground dolomite limestone should be applied at an appropriate rate based on soil and slope conditions.

Subsoil should be tilled to a depth of at least 3 inches to adequately mix in soil additives and to permit bonding of the topsoil to the subsoil. If the existing topsoil is inadequate to support a densely vegetated filter strip, then suitable material should be imported. Proper specifications for imported topsoil should include the following:

1. *The USDA textural triangle classification.*
2. *Requirements for organic matter content (not less than 1.5% by weight), pH (6 to 7.5), and soluble salt (not greater than 500 parts per million).*
3. *Placement thickness and compaction. Topsoil should be uniformly distributed andcompacted, and should have a minimum compacted depth of 6 to 8 inches.*

All seeding, fertilization, and mulching should be per the Virginia Erosion and Sediment Control Handbook (VESCH), 1992 edition, or as specified by a qualified agronomist.

Maintenance/Inspection Guidelines

Vegetated filter strips require regular maintenance. Field studies indicate that these BMPs usually have short life spans because of lack of maintenance, improper location, and poor vegetative cover. The following maintenance and inspection guidelines are **NOT** all-inclusive. Specific facilities may require other measures not discussed here. It is the designer's responsibility to decide if additional measures are necessary.

Filter strips should be inspected regularly for gully erosion, density of vegetation, damage from foot or vehicular traffic, and evidence of concentrated flows circumventing the strip. The level spreader should also be inspected to verify that it is functioning as intended.

Inspections are critical during the first few years to ensure that the strip becomes adequately established. Maintenance is especially important during this time and should include watering, fertilizing, re-seeding or planting as needed.

Once a filter strip is well established and functioning properly, periodic maintenance, such as watering, fertilizing and spot repair, may still be necessary. However, fertilization efforts should be minimized. Natural selection allows certain species (usually native plants) to thrive while others decline. Excessive fertilization and watering to maintain individual plantings may prove costly, especially in abnormally dry or hot seasons. Overseeding and replanting should be limited to those species which have exhibited the ability to thrive.

To increase the functional longevity of a vegetated filter strip, the following practices are recommended:

- *Regular removal of accumulated sediment,*
- *periodic reestablishment of vegetation in eroded areas or areas covered by accumulated sediment,*
- *periodic weeding of invasive species or weeds, and*
- *periodic pruning of woody vegetation to stimulate growth.*

FIGURE 3.14 - 2

Vegetated Filter Strip

Source: Design of Stormwater Filtering Systems, Center for Watershed Protection,1996

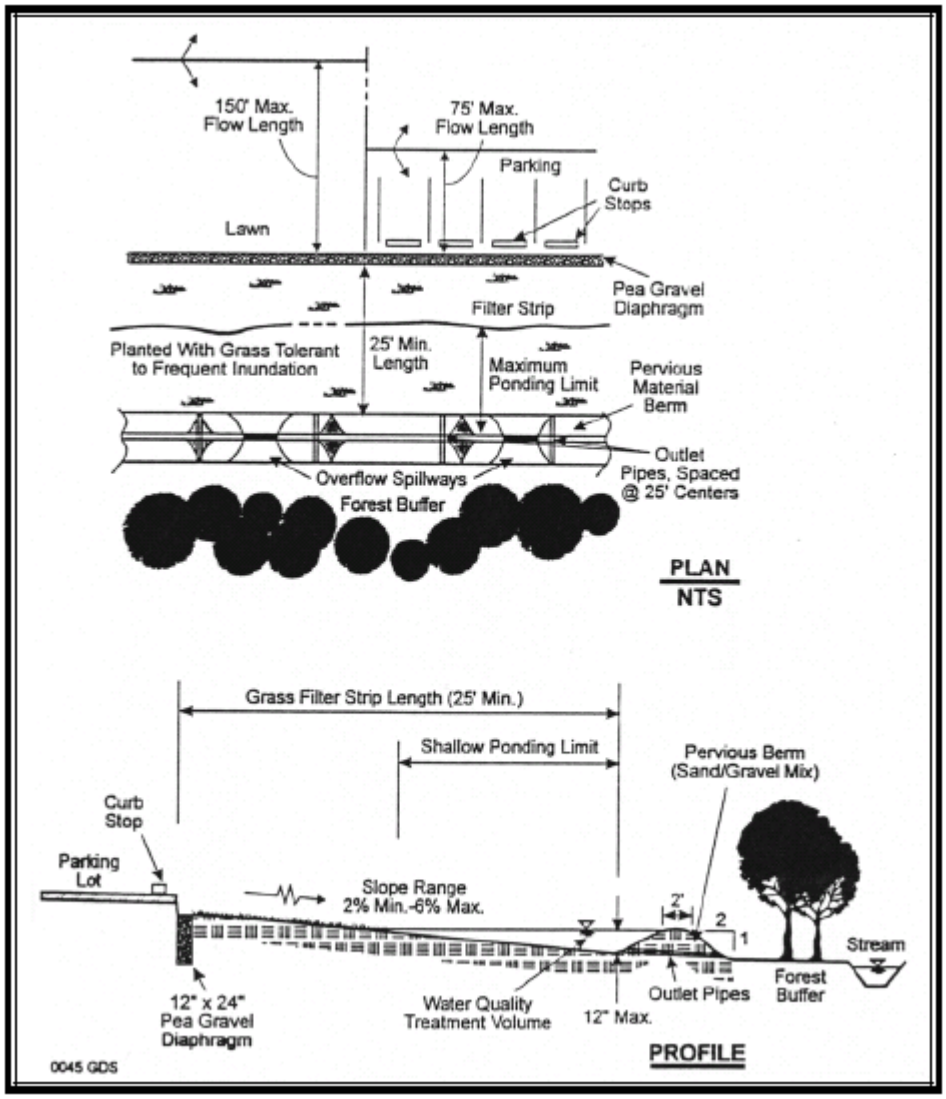

FIGURE 3.14 - 2
Level Spreader

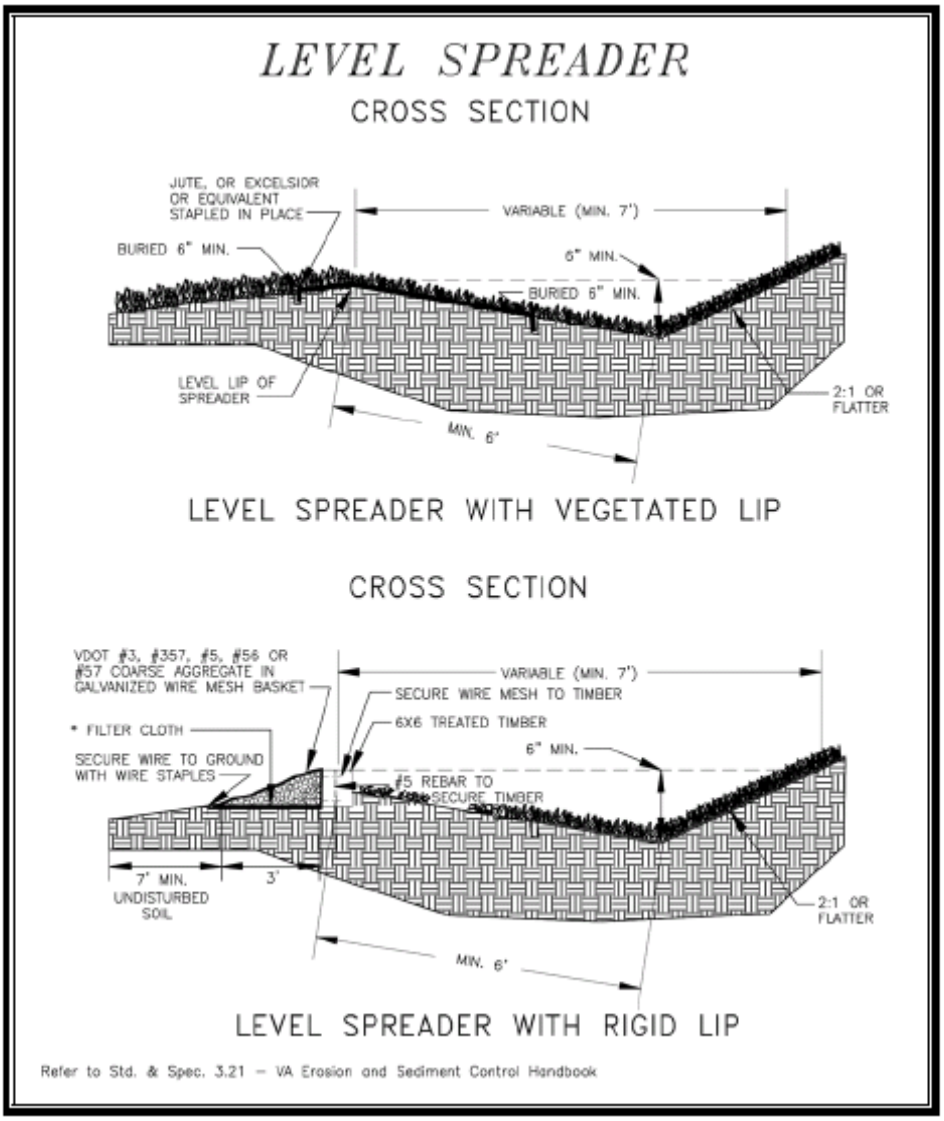

Vegetated Filter Strip. Note landscaped areas parallel to contours to force runoff to spread out. No evidence of channel flow short circuiting filter strip.

FIGURE 3.14 - 3
Virginia Physiographic Regions

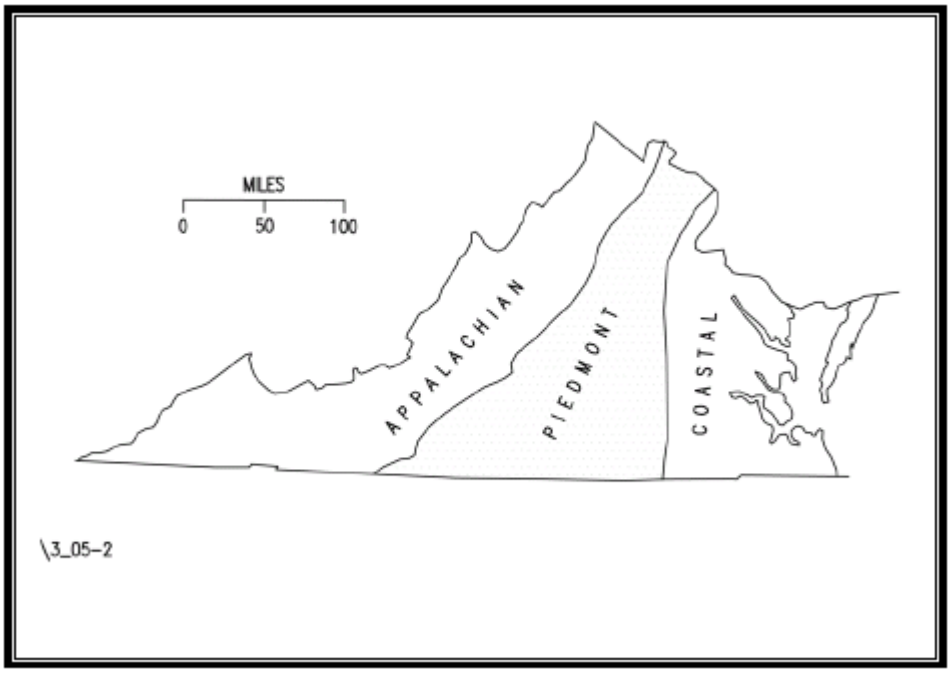

FIGURE 3.14 - 4
USDA Plant Hardiness Zones

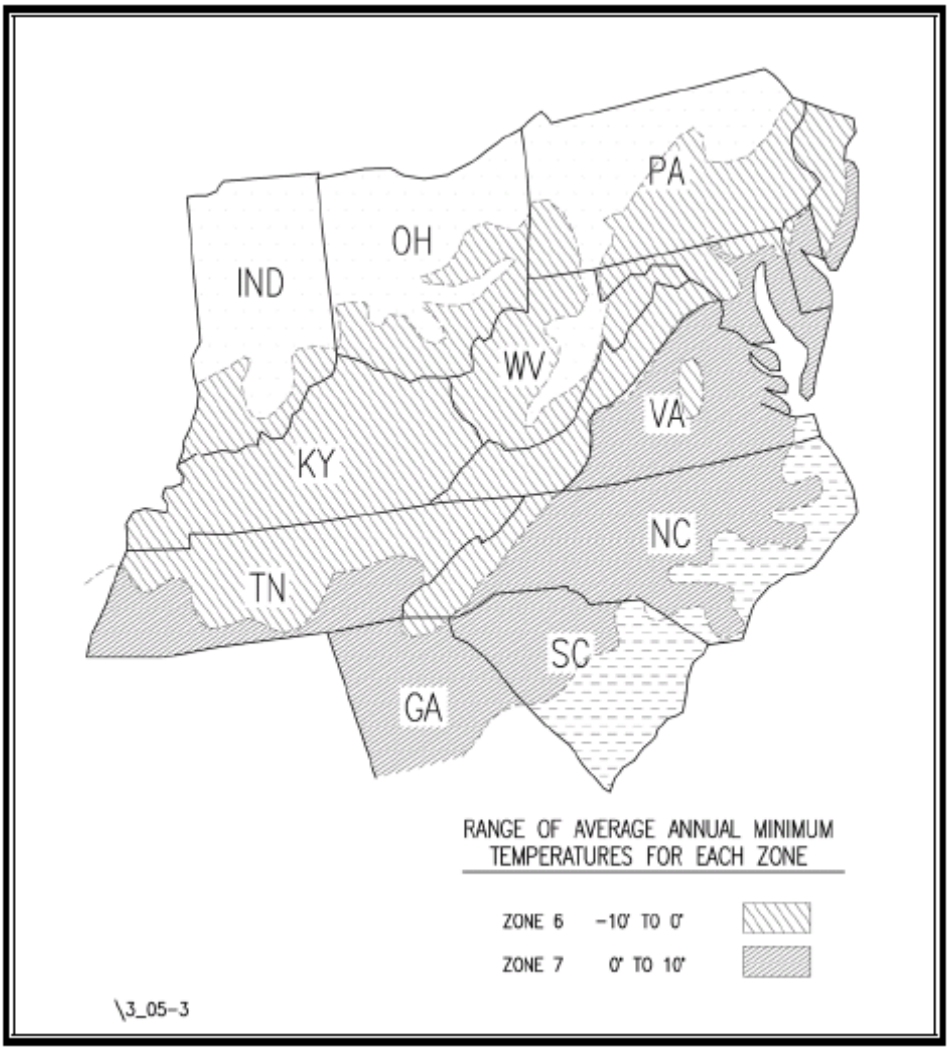

<u>BMP Guidance #3-D</u>
EXTENDED-DETENTION BASIN & ENHANCED EXTENDED-DETENTION BASIN

Definition

An extended-detention basin is an impoundment that temporarily stores runoff for a specified period and discharges it through a hydraulic outlet structure to a downstream conveyance system. An extended-detention basin is usually dry during non-rainfall periods.

Purpose

An extended-detention basin can be designed to provide for one, or all, of the following: a) *water quality enhancement*, b) *downstream flood control*, and c) *channel erosion control*.

<u>Water Quality Enhancement</u>

An **extended-detention basin** improves the quality of stormwater runoff through gravitational settling. However, due to frequent high inflow velocities, settled pollutants often get resuspended.

An ***enhanced*** **extended-detention basin** has a higher efficiency than an extended-detention basin because it incorporates a shallow marsh in its bottom. The shallow marsh provides additional pollutant removal through *wetland plant uptake*, *absorption*, *physical filtration*, and *decomposition*. The shallow marsh vegetation also helps to reduce the resuspension of settled pollutants by trapping them.

The target pollutant removal efficiencies for both extended-detention and *enhanced* extended detention basins are presented in **Table 3.07-1**. The target pollutant removal efficiencies are based on certain design criteria associated with the physical characteristics of the basin, and shallow marsh, when used.

FIGURE 3.07 - 1a

Extended-Detention Basin - Plan

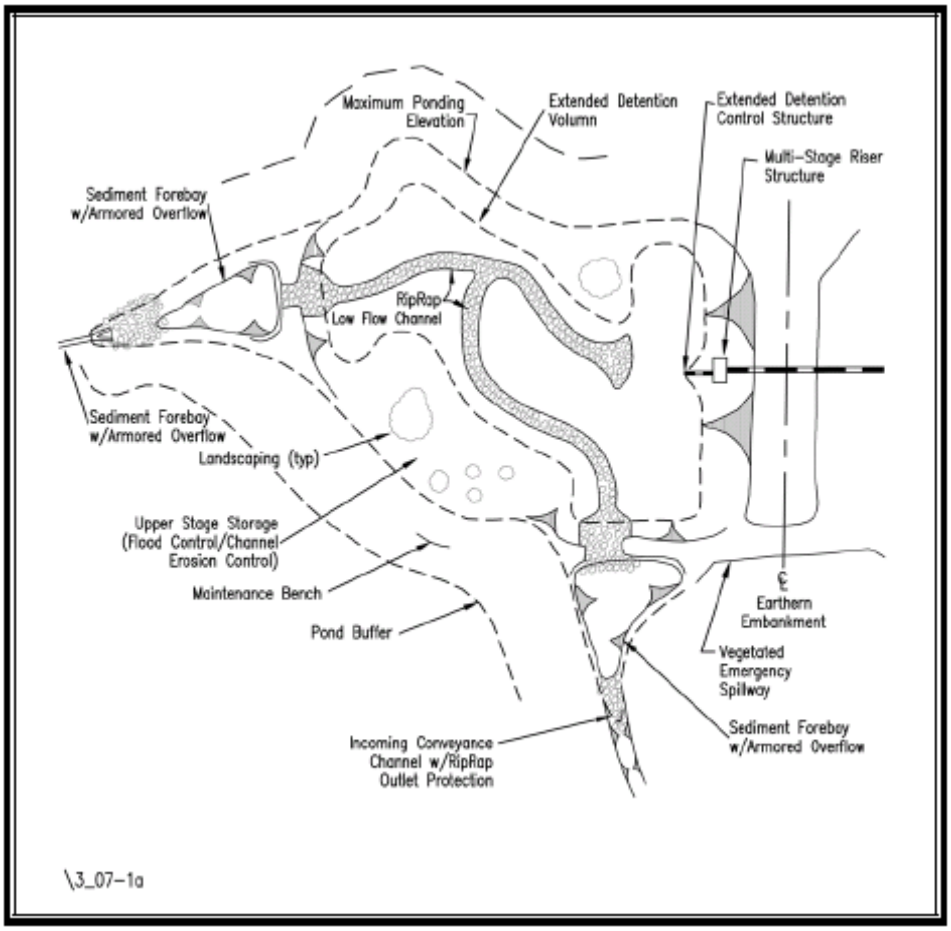

FIGURE 3.07-1b
Extended-Detention Basin – Section

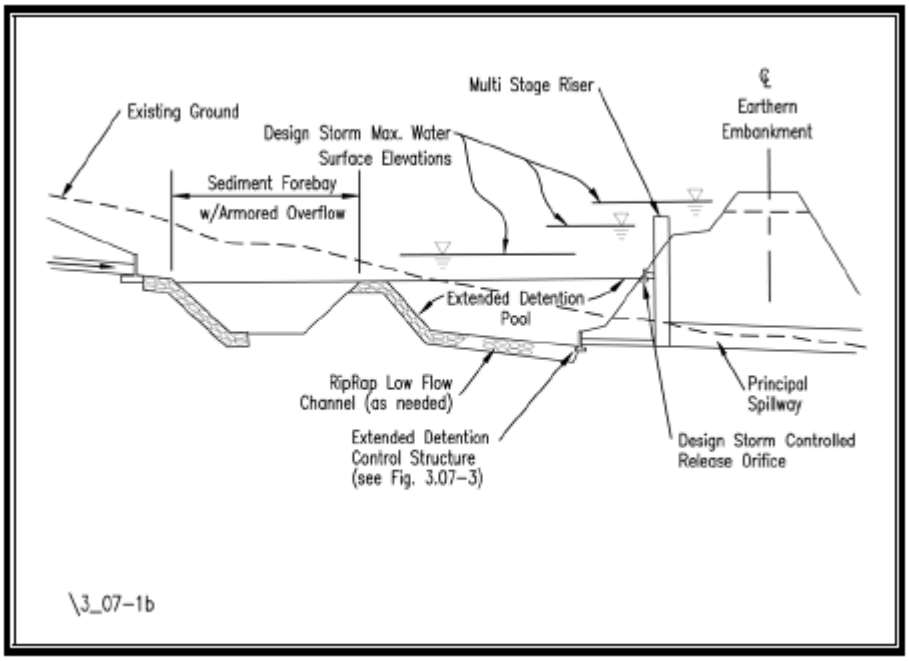

Flood Control

Extended-detention basins can be designed for flood control by providing additional storage above the extended-detention volume, and by reducing the peak rate of runoff from the drainage area. The design storms chosen for flood control are usually specified by ordinance, or are based on specific watershed conditions. By managing multiple storms, such as the 2- and 10-year storms, adequate flood control may be provided for a broad range of storm events.

The additional volume required for storage above the extended-detention volume can be readily determined using the hydrologic methods discussed in **Chapter 4, Hydrologic Methods, Virginia Stormwater Management Handbook**. Once this volume is known, a control or spillway structure can be designed and the reservoir routing and channel capacity design techniques discussed in **Chapter 5, Engineering Calculations, VSMH**.

FIGURE 3.07 - 2a
Enhanced Extended-Detention Basin - Plan

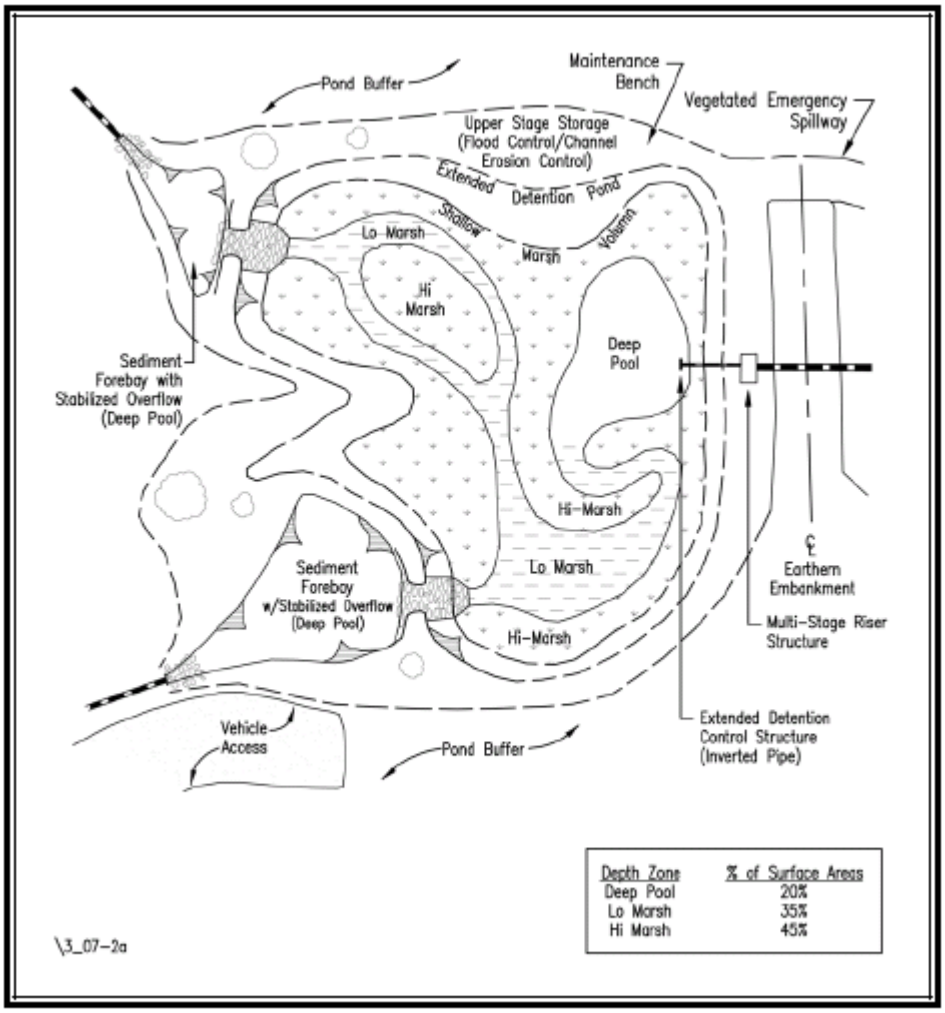

FIGURE 3.07 - 2b
Enhanced Extended-Detention Basin - Section

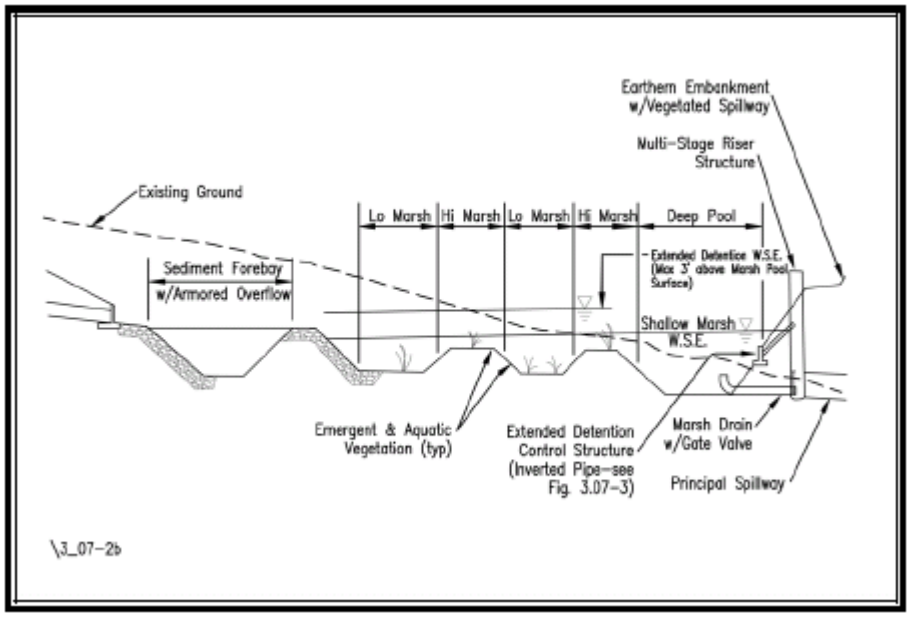

TABLE 3.07 - 1
Pollutant Removal Efficiencies for
Extended-Detention & Enhanced Extended-Detention Basins

Type	***Target Phosphorus Removal Efficiency***	***Impervious Cover***
Extended-detention (30 *hr*. Drawdown of 2 × WQ Volume)	35%	22-37%
Enhanced extended-detention (30-*hr*. Drawdown of 1 × WQ Volume, and 1 × WQ Volume Shallow Marsh)	50%	38-66%

Conditions Where Practice Applies

Channel Erosion Control

The objective in controlling channel erosion is to reduce the rate of discharge from a designated frequency storm to below the critical velocity of the downstream channel. The critical velocity of a channel is the velocity that, when exceeded, causes the channel bed or banks to erode. The Virginia Erosion and Sediment Control Handbook, 1992 edition, provides the theoretical critical velocities for various natural channel linings. This critical velocity approach, however, does not consider the frequency or the duration of the critical velocity flow. An increase in impervious cover will increase the frequency of occurance of the “pre-developed” design storm discharge by raising the rainfall to runoff response characteristics of the drainage area. A detention basin will increase the duration of the “pre-developed” design storm discharge by releasing the runoff over time. (A detention basin lowers the peak by spreading it out over a longer period of time.) An extended detention basin, on the other hand, reduces the discharge based on an extended period of time rather than a peak rate of discharge. Extended-detention of a specific

design storm will typically result in lower rates of discharge than the “pre-developed” rate (or critical velocity), thereby compensating for the effects of increased frequency and duration.

The selection of an design storm and a extended-detention period is not a scientific process and is currently determined to be the runoff from the 1-year frequency storm, detained and released over a 24 hour period. Studies show a significant reduction in stream channel erosion below extended detention facilities designed to this criteria (Galli MWCOG, 1992). Extended-detention of the 1-year storm lowers the discharge velocities from a broad range of storm frequencies to non-erosive levels.

Drainage Area

The **minimum** contributing drainage area for an extended-detention basin varies with the required extended-detention volume and draw down period and the resulting orifice size. The orifice configuration for small drainage areas should be selected carefully since small openings (less than 3 inches) are prone to clogging. Several different configurations for effective trash, debris, and sediment control are presented in **Figure 3.07-3**. The engineer is free to choose any of these, or to select from other innovative designs.

The **maximum** drainage area served by an extended-detention basin will vary from watershed to watershed. Drainage areas above 50 to 75 acres may require provisions for *base flow*. (Refer to **Design Criteria**). Care should be taken when sizing the water quality orifice if base flow is present. An undersized orifice may create an undersized permanent pool within the extended-detention volume, leaving inadequate volume above it to provide the required extended-detention. An oversized orifice will result in little extended-detention of the water quality volume.

Development Conditions

Lacking a permanent pool of water, a detention facility is rarely considered aesthetically pleasing. It is, therefore, recommended for *low-visibility* sites. In certain situations, an extended-detention basin may be used on a *high-visibility* site, but the designer must be careful to avoid stagnation or excessive infiltration of the shallow marsh. Maintenance of the basin’s shallow marsh is not necessarily critical to its ability to remove pollution, but maintenance **is critical** to ensure the BMP’s acceptance by adjacent landowners.

Extended-detention basins can be used for low- to medium-density residential or commercial projects, as classified by their impervious cover. (see **Table 3.07-1**). Along with the storage and shallow marsh volumes required in the basin, a minimum 20-foot vegetated buffer should also be provided. This requirement results in the need for more land. It is for this reason that the use of extended-detention basins may not be the best choice of water quality BMP in developing watersheds where land is at a premium. This strengthens the argument for a regional or watershed approach to stormwater management. A regional extended-detention basin is not only more cost effective, but is also more likely to be installed on land that is not suitable for development. (It should be noted, however, that the environmental impacts and appropriate permits must still be considered for such an application.)

FIGURE 3.07 - 3a

Trash and Debris Rack Configurations for Extended-Detention Control Structures

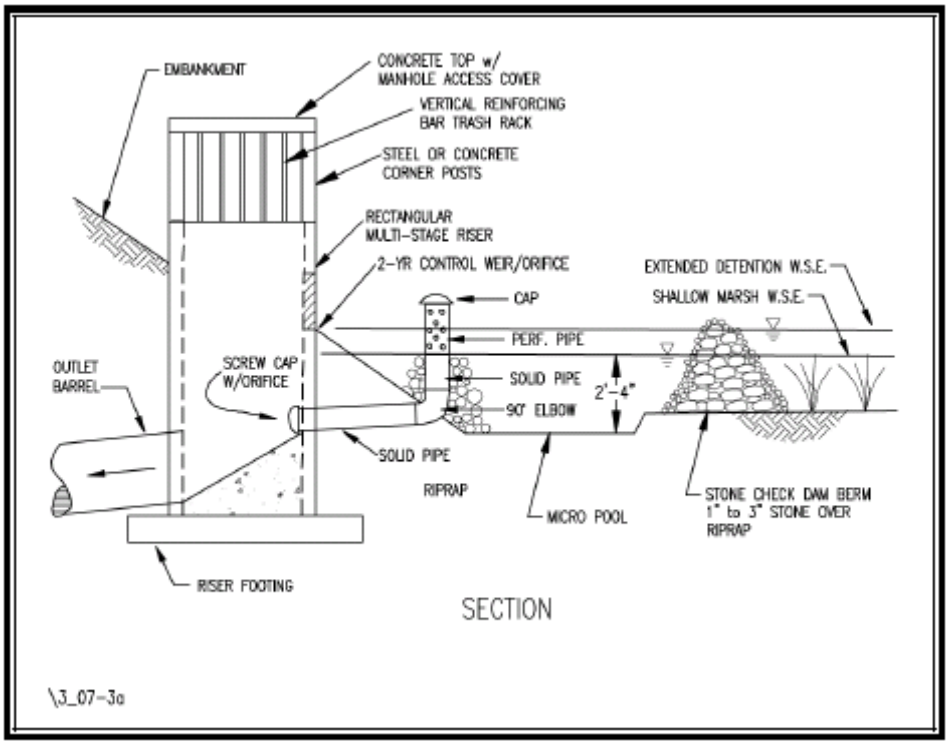

FIGURE 3.07 - 3b

Trash and Debris Rack Configurations for Extended-Detention Control Structures

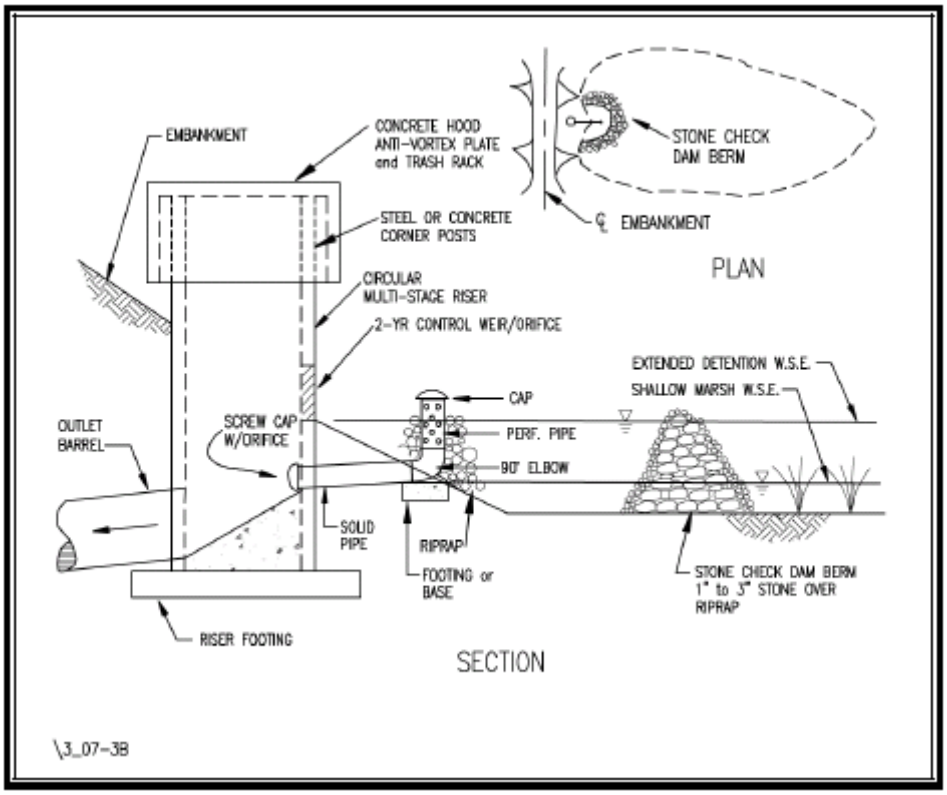

FIGURE 3.07 - 3c

Trash and Debris Rack Configurations for Extended-Detention Control Structures

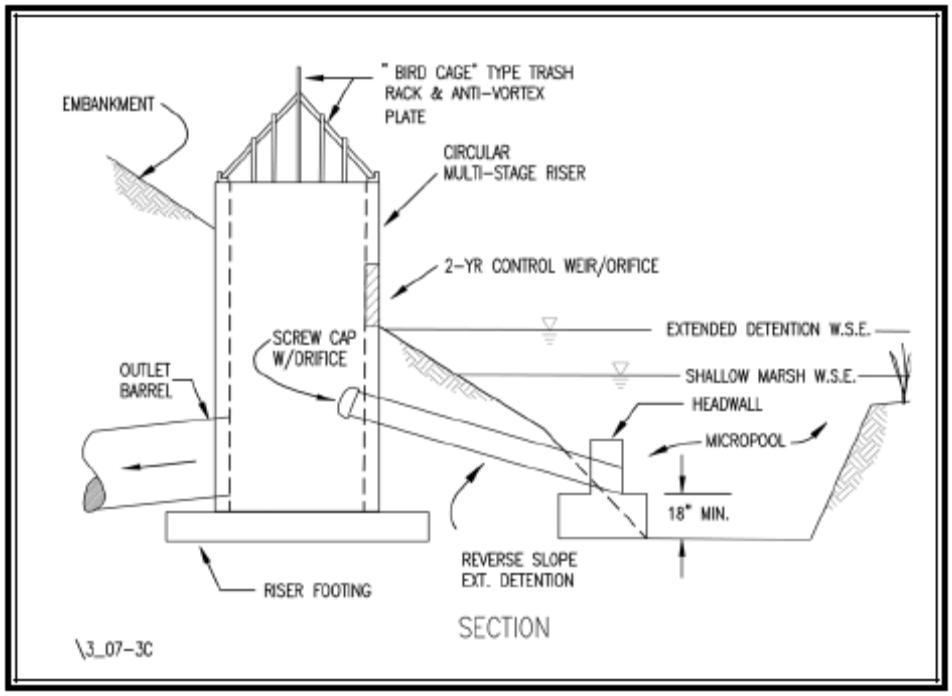

Planning Considerations

The success of an extended-detention basin is dependent on the designer's ability to identify any site and downstream conditions that may affect the design and function of the basin. Above all, the facility should be compatible with both upstream and downstream stormwater systems to promote a *watershed approach* in providing stormwater management.

The planning considerations for designing the shallow marsh of an *enhanced* extended-detention basin are very similar to those of a constructed wetland (refer to **BMP Guidance #3-E, Constructed Stormwater Wetland; Planning Considerations**).

Site conditions

Existing site conditions should be considered in the design and location of an extended-detention basin. Features such as topography, wetlands, structures, utilities, property lines, easements, etc., may impose constraints on the development.

All extended-detention basins should be a minimum of 20 feet from any structure or property line, and 100 feet from any septic tank/drainfield. Extended-detention basins should also be a minimum of 50 feet from any steep slope (greater than 15%). Otherwise, a geotechnical report will be required to address the potential impact of any basin that must be constructed on or near such a slope.

Additional considerations are as follows:

1. **Soils –**

In the past, many designs were accepted based upon soils information compiled from available data, such as SCS soil surveys. While such a source may be appropriate for a pre-engineering feasibility study, final design and acceptance **should be based on an actual subsurface analysis and a permeability test**, accompanied by appropriate engineering recommendations.

Highly permeable soils are not suited for extended-detention basins. A basin with highly permeable soils will act as an infiltration facility until the soils become clogged. Although this phenomenon is not always considered a negative impact, it does change the function and design of the basin. For an *enhanced* extended-detention basin, the soils must support the shallow marsh **at the time of stabilization and planting**.

A thorough analysis of the soil strata should be conducted to verify its suitability for use with an extended-detention basin. The geotechnical study required for the embankment design (refer to **Minimum Standard 3.01, Earthen Embankment, VSMH**) will often provide adequate data for this purpose. The soil permeability may be such that the basin can support a shallow marsh. However, as the depth of the temporary storage increases, the increased head or pressure on the soil may increase the rate of infiltration. If necessary, a liner of clay, geosynthetic fabric, or other suitable material may be used in the basin (as specified by a geotechnical engineer). Refer to the design criteria for basin liners.

2. **Rock –**
The subsurface investigation should also identify the presence of rock or bedrock. Excavation of rock may be too expensive or difficult with conventional earth moving equipment. Blasting the rock for removal may be possible, but it may also open seams or create cracks in the underlying rock, resulting in an unwanted drawdown of the shallow marsh. Blasting of rock is not recommended unless a liner, as described above, is used.

3. **Karst –**
In regions where Karst topography is prevalent, projects may require thorough soils investigation and specialized design and construction techniques. Since the presence of karst may affect BMP selection, design, and cost, a site should be evaluated **during the planning phase of the project**.

4. **Existing Utilities –**
Most utility companies will not allow a permanent or temporary pool to be installed over their underground lines or right-of-ways. If such a site must be used, the designer should obtain permission from the utility company **before designing the basin**. The relocation of any existing utilities should be researched and the costs included in the overall basin cost estimate.

Environmental Impacts

1. **Wetlands–**
Large facilities and/or regional facilities lend themselves to being placed in low lying, and usually environmentally sensitive, areas. Such locations often contain wetlands, shallow marshes, perennial streams, wildlife habitat, etc., and may be protected by state or federal laws. The owner or designer should investigate the regional wetland maps and contact appropriate local, state, and federal agencies to verify the presence of wetlands, their protected status, and the suitability for an extended-detention basin at the location in question.

With careful planning, it may be possible to incorporate wetland mitigation into an extended detention basin design. This assumes that the functional value of the existing or impacted wetland can be identified and included, reconstructed, or mitigated for, in the basin. Contact the Virginia Department of Environmental Quality for more information regarding wetland mitigation.

2. **Downstream Impacts–**
Urban detention and retention basin design should be coordinated with a watershed or regional plan for managing stormwater runoff, if available. In a localized situation, an individual basin can provide effective protection for the downstream channel if no other areas contribute runoff in a detrimental way to the channel. However, an uncontrolled increase in the number of impoundments within a watershed can severely alter natural flow conditions, causing combined

flow peaks or increased flow duration. This can ultimately lead to flooding downstream degradation.

3. **Upstream Impacts–**
The upstream channel must also be considered, especially when the extended-detention basin is used to control downstream channel erosion. Erosive upstream flows will not only degrade the upstream channel, but will also significantly increase the maintenance requirements in the basin by depositing large amounts of sediment eroded from the channel bottom.

Water Quality Enhancement

In an extended-detention basin, the quality of the incoming stormwater is improved through *gravitational settling* of pollutants from the water quality volume. The pollutant removal efficiency for *soluble* pollutants is usually much **lower** than for *particulate pollutants*. Therefore, the efficiency of an extended-detention basin can be **enhanced** by adding a *shallow marsh* to the lower stage of the basin. The shallow marsh creates physical and biological characteristics that are more conducive to the removal process for soluble pollutants.

Settling column studies suggest a maximum upper limit of approximately 40 to 50% removal for total phosphorous after 48 hours, with most of the removal occurring within the first 6 to 12 hours (MWCOG, 1987). However, field studies show a much broader range in removing phosphorous (15-70%) and in removing sediment (65%). Since the soluble form of phosphorous comprises nearly half the phosphorous found in urban runoff, the lower efficiency of 35% (**Table 3.07-1**) is deemed appropriate. The increase in efficiency of *enhanced* extended-detention is attributed to the ability of the shallow marsh to reduce the soluble pollutant levels.

Providing a larger extended-detention volume (similar to providing a larger permanent pool for a retention basin) may not increase the pollutant removal efficiency. **Increasing the volume without increasing the detention time results in a larger orifice size and, therefore, less control of the smaller "first flush" storms**. Simply increasing the detention time will not provide additional efficiency either, since the 30-hour drawdown period exceeds the *probable settling time* associated with most particulate pollutants. The pollutant removal efficiency in an *enhanced* extended-detention basin **can** be increased, however, by enlarging the volume of the shallow marsh. As the volume of the marsh is increased, with respect to the contributing drainage area, the *hydraulic residence time* is increased. This longer residence time provides more opportunity for further biological uptake and decomposition of pollutants.

Flooding and Channel Erosion Control

Flood control and downstream channel erosion are managed by storing additional runoff above the extended-detention pool (and shallow marsh) and by properly sizing the discharge opening in the riser structure.
When selecting an extended-detention basin, the biggest concern is how much land it requires. The storage volume needed above the extended-detention pool (and shallow

marsh) must be approximated and its availability verified on the preliminary site plan. A preliminary sizing estimate is recommended during the planning stage to verify the feasibility of using an extended-detention basin. (See **Chapter 5, Engineering Calculations, VSMH** for Storage Volume Requirement Estimates).

Sediment Control

An extended-detention basin may be used as a *temporary sediment control basin* during construction. The design of a temporary sediment basin is based on the *maximum drainage area* and *rate of runoff* expected anytime during the site construction process. In contrast, the design of the permanent stormwater basin is based on *post-developed land use conditions*. When designing a basin to provide both temporary sediment control and permanent stormwater management, the criteria that produce the largest storage volume should be used to size the basin. The discharge structure should be designed as a permanent stormwater facility with respect to its riser and barrel hydraulics and materials. The riser's geometry may then be temporarily modified to provide the wet and dry storage for the temporary sediment basin, as required by VESCH, 1992 edition.

Safety

Basins that are readily accessible to populated areas should include all possible safety precautions. Steep side slopes (steeper than 3H:1V) at the perimeter should be avoided and dangerous outlet facilities should be protected by enclosures. A dry basin may hold a significant amount of soft sediment in the bottom, posing a danger to small children.

Maintenance

Extended-detention basins have shown an ability to function as designed for long periods without routine maintenance. However, some maintenance is essential to protect the aesthetic properties of these facilities.

Vehicular access to the sediment forebay and the release structure should be provided to allow for long-term maintenance (such as sediment removal) and repairs, as needed. The use of a sediment forebay at the upstream end of the basin will help to localize the disturbance during routine sediment removal operations. An onsite area designated for sediment dewatering and disposal should also be included in the design. Care must be taken in the disposal of sediment that may contain an accumulation of heavy metals. **Sediment testing is recommended prior to sediment removal to assure proper disposal**.

Maintenance items observed and addressed early will help to limit overall maintenance costs. Routine maintenance inspections, however, should be conducted by authorized personnel.

Design Criteria

This section provides recommendations and minimum criteria for the design of extended-detention and *enhanced* extended-detention basins intended to comply with the Virginia Stormwater Management program. It is the designer's responsibility to decide which aspects of the program are applicable to the particular facility being designed and to decide if any additional design elements are required. The designer should also consider the long-term functioning of the facility when selecting materials for the structural components.

Hydrology and Hydraulics

The pre- and post-developed hydrology for a basin's contributing watershed, the hydraulic analysis of the riser and barrel system, and the emergency spillway design should be developed using **Chapter 4, Hydrologic Methods** and **Chapter 5, Engineering Calculations, VSMH**. The 2-year storm should be used in *receiving channel adequacy* calculations and the 10-year storm should be used for *flood control* calculations.

Embankment

The design of the earthen embankment for an extended-detention and *enhanced* extended-detention basin should comply with **Minimum Standard 3.01, Earthen Embankment, VSMH**. The requirements for geotechnical, seepage control, maximum slope, and freeboard are particularly appropriate.

Principal Spillway

The design of the principal spillway and barrel system, anti-vortex device, and trash racks should comply with **Minimum Standard 3.02, Principal Spillway, VSMH**.

Emergency Spillway

An emergency spillway that complies with **Minimum Standard 3.03, Vegetated Emergency Spillway, VSMH** should be provided when possible, or appropriate.

Sediment Basin Conversion

When a proposed stormwater facility is used initially as a temporary sediment basin, conversion to the permanent facility should be completed after final stabilization and approval from the Program Administrator

Sometimes, the temporary sediment basin design criteria will require more storage volume than that of a stormwater basin. In such cases, the extra volume may be allocated to the component of the facility that would derive the greatest benefit from increased storage. This will depend on the primary function of the facility (i.e., water quality enhancement, flood control, or channel erosion control).

If modifications to the riser structure are required as part of the conversion to a permanent basin, they should be designed so that a) *the structural integrity of the riser is not threatened*, and b) *large construction equipment is not needed within the basin*. Any heavy construction work required on the riser should be completed during its initial

installation. It is **NOT** recommended to install a temporary sediment basin riser structure in the basin and then replace it with a permanent riser after final stabilization. This may affect the structural integrity of the existing embankment and barrel.

The following additional criteria should be considered for a conversion:

1. Final elevations and a complete description of any modifications to the riser structure geometry should be shown on the approved plans.
2. The wet storage area must be dewatered following the approved methods in VESCH, 1992 edition.
3. Sediment and other debris should be removed to a contained spoil area. Regrading of the basin may be necessary to achieve the final design grades and to provide an adequate topsoil layer to promote final stabilization.
4. Final modifications to the riser structure should be carefully inspected for water tight connections and compliance with the approved plans.
5. Final landscaping and stabilization should be per VESCH, 1992 edition, and Section 32.-25.1 of the City Code. Establishing vegetation may prove difficult if flow is routed through the facility prior to germination. In such cases, specifying sod or other reinforcements for the basin bottom and low flow channels may be appropriate.

Extended-Detention Volume

Water quality extended-detention basins are designed to allow particulate pollutants to settle out of water quality volume. **Chapter 5, Engineering Calculations, VSMH** provides calculation procedures for determining the *water quality volume* for a particular watershed, and for sizing the release orifice to provide the required 30-hour draw down. **The water quality volume is the first one-half inch of runoff from the impervious surfaces**.

Channel erosion control extended-detention basins are designed to reduce the rate of discharge such that the velocity is below the critical velocity for the downstream channel. **Chapter 5, Engineering Calculations, VSMH** provides the calculation procedures for calculating the *channel erosion control volume* for a particular watershed, and for sizing the release structure to provide the required 24-hour draw down. **The channel erosion control volume is the runoff generated from the drainage area or watershed by the 1-year frequency design storm.**

The orifice sizing procedure for extended detention is based on a "*brim*" drawdown. The full design volume is assumed to be in the basin, and the drawdown period is the time it takes to drain that entire volume. In reality, this technique ignores the *routing effect* that occurs in the basin: as the runoff volume accumulates, stormwater is draining into the basin while simultaneously draining out of it. For small storms, the extended-detention volume will never fill to the "brim" and will, therefore, never achieve the maximum drawdown time.

The calculation procedure used to verify the draw down time is presented in **Chapter 5, Engineering Calculations, VSMH.** The extended-detention volume (in cubic feet) is divided by the maximum release rate (in cubic feet per second), which is based on the maximum hydraulic head associated with the water quality volume, to give the *detention*

time, in seconds. Using the maximum release rate, rather than the average release rate, results in a smaller orifice, which helps to compensate for ignoring the routing effect, as discussed above.

<u>*Enhanced* Extended-Detention Basin: Shallow Marsh</u>
When a higher pollutant removal efficiency is needed, a water quality extended-detention basin can be enhanced by providing a *shallow marsh* in the bottom of the facility. The use of a shallow marsh limits the maximum range of vertical storage in the extended-detention pool to 3 feet above the marsh's water surface elevation. However, the surface area requirements for the shallow marsh will likely force the basin's geometry to broaden at the lower stages, which will compensate for the reduced vertical storage. Extended-detention water surface elevations greater than 3 feet, and the frequency at which those elevations can be expected, are not conducive to the growth of dense or diverse stands of emergent wetland plants.

Similar to the permanent pool of a constructed wetland, the shallow marsh in the bottom of an extended-detention basin should be designed to maximize pollutant removal efficiency. The physical and hydraulic factors that can influence the pollutant removal efficiency of a shallow marsh are: 1) *volume*, 2) *depth*, 3) *surface area*, 4) *geometry*, and 5) *hydraulic residence time*. In addition, careful attention should be given to the landscaping plan (refer to **BMP Guidance #3-E, Constructed Stormwater Wetland** for design criteria regarding the establishment of vegetation in a shallow marsh).

The following criteria are general guidelines. The depth of the treatment volume and amount of surface area varies with each site and the intended secondary functions of the facility (i.e., providing habitat, aesthetics, etc.).

1. **Volume–**
The pool volume of an extended-detention shallow marsh varies with the water quality volume. The water quality volume (WQV), as defined by Virginia Stormwater Management regulations, is the **first one-half inch of runoff, multiplied by the area of impervious surface**. The target pollutant removal efficiency of an *enhanced* extended-detention basin, as presented in **Table 3.07-1**, is based on 2.0 times the WQV. The shallow marsh pool volume represents 1.0 × WQV and the extended detention volume represents an additional 1.0 × WQV. The pollutant removal efficiency is directly related to the percentage of runoff available to be treated. If it is assumed that all of the rainfall that hits impervious surfaces turns into runoff (ignoring minor losses such as evaporation, depression storage, etc.), then a design volume of 2.0 × WQV represents a design storm of 1 inch of rainfall. Based upon available rainfall data, 1 inch of rainfall represents approximately 85% of all runoff producing storm events (MWCOG, 1992). Therefore, 2.0 × WQV (or 1 inch of rainfall from impervious surfaces) represents a significant percentage of runoff producing events.

2. **Depth–**

The treatment volume of a shallow marsh should occupy different depth zones, as shown in **Table 3.07-2**, to maximize the physical and biological processes that occur within the marsh. Three basic depth zones should be used: a) *deep pools*, b) *low-marsh*, and c) *high-marsh*.

a. Deep pool areas should be 1.5 to 4 feet deep and may consist of 1) *sediment forebays*, 2) *micro-pools*, and 3) *deep water channels*.

1. A sediment forebay is highly recommended in a shallow marsh. It should be constructed near incoming pipes or channels to reduce the velocity of incoming runoff, trap course sediments, and spread the runoff evenly over the marsh area. The forebay should be constructed as a separate cell from the rest of the marsh, with maintenance access provided to simplify cleaning with heavy equipment (refer to **Minimum Standard 3.04, Sediment Forebay, VSMH**).

2. A micro-pool should be a standard component of the extended-detention shallow marsh. The purpose of a micro-pool is to create sufficient depth near the outlet to help reduce clogging of the extended detention orifice. This will allow for a reverse-sloped pipe to extend into the marsh below the pool surface elevation but above the pool bottom which helps to prevent clogging, since a typical marsh environment consists of floating plant debris and possible sediment and organic accumulation on the bottom. Micro-pools also provide open water areas to attract plant and wildlife diversity (refer to the **Overflow** discussion later in this section).

3. Deep water channels provide an opportunity to lengthen the flow path to avoid seasonal short-circuiting (refer to the **Geometry** discussion later in this standard.)

b. Low-marsh zones range in depth from 6 to 18 inches.

c. High-marsh zones range in depth from 0 to 6 inches. The high-marsh zone will typically support the greatest density and diversity of emergent plant species.

3. **Surface Area–**

At a minimum, the surface area of an extended-detention shallow marsh should be sized to equal 1% of the contributing drainage area. The recommended surface area allocation for the different depth zones is presented in **Table 3.07-2** (MWCOG, 1992). Note that the surface area criteria may create a conflict with the volume allocations. If this happens, the designer is reminded that these are recommendations. **The criteria that establish the largest permanent pool should be used**.

4. **Geometry–**
The geometry of the shallow marsh must be carefully designed to avoid *short-circuiting*. Meandering, rather than straight line flow is desirable. Maximum pollutant removal efficiencies will be achieved due to the increased contact time associated with the longest possible flow path through the marsh. A length-to-width ratio of 2:1 through the marsh should be maintained (see **Figure 3.07-4**). The length-to-width ratio is calculated by dividing the straight line distance from the inlet to the outlet by the marsh's average width.

TABLE 3.07 - 2
Recommended Allocation of Surface Area and Treatment Volume for Depth Zones
(Adapted from MWCOG, 1992)

Depth Zone	% of Surface Area	% of Treatment Volume
Deep Water 1.5 to 4 feet in depth (forebay and micro-pool)	20	40
Low Marsh 0.5 to 1.5 feet in depth	40	40
High Marsh 0 to 0.5 feet	40	20

5. **Hydraulic Residence Time–**
The *hydraulic residence time* is the shallow marsh pool volume divided by the average outflow discharge rate. The longer the residence time, the higher the pollutant removal efficiency (Driscoll, 1983, Kulzer, 1989).

In theory, by using 1.0 x WQV in sizing the shallow marsh volume, the smaller storms (those producing ½ inch of runoff or less) will displace the pool volume of the marsh. However, larger treatment volumes (such as 2 or 3 x WQV), compared with the watershed size, will provide longer residence times and greater efficiencies. In certain situations, increasing the target pollutant removal efficiency by using a higher water quality volume multiplier to size the marsh volume may be acceptable. However, the challenge will be to provide the recommended depth zone allocations for the allocated percentages of surface area and treatment volumes, as previously discussed.

<u>Base Flow</u>
The presence of a *base flow* makes the design of an extended-detention control structure difficult. If the extended-detention orifice is sized for the *wet weather base flow*, then the dry weather control is compromised because the release rate is too high. If the orifice is undersized to maintain the *dry weather control*, then the extended-detention pool may remain full of water during the wet weather season; this essentially eliminates the extended-detention volume by creating an undersized permanent pool (1.0 x WQV). When seasonal base flow is present, an adjustable orifice should be provided in the control structure to maintain the marsh volume.

The presence of a base flow and the associated potential for erosion within the basin should be considered in the design. Ideally, base flow, or *low flows*, should be spread out so that they *sheet flow* across the bottom of the basin. Due to maintenance difficulties and undesirable insect breeding associated with standing water, some localities may have ordinances that require *low-flow channels*(or *trickle ditches*) to carry base flows. If an *impervious* ditch is used to convey base flows, it should be designed to overflow during storm events and spread the runoff across the basin floor. The use of gabion baskets or riprap, instead of concrete, may provide the advantage of slowing the flow, encouraging spillover onto the basin floor. **Generally, an impervious low-flow channel is NOT recommended in a stormwater management water quality basin, as its use is contrary to the basin's water quality function**.

Overflow

Similar to a constructed stormwater wetland, an extended-detention overflow system should be designed to provide adequate overflow or bypass for a full range of design storms. For an *enhanced* extended-detention basin, the overflow system should pass the full range of design storms with no more than 3 feet of hydraulic head above the shallow marsh.

Sediment Forebay

A sediment forebay will help to postpone overall basin maintenance by trapping incoming sediments at a specified location. The forebay should be situated and designed per **BMP Guidance #3-A, Sediment Forebay**. Usually, a sediment forebay is placed at the outfall of the incoming storm drain pipes and positioned to ensure access for maintenance equipment.

A sediment forebay enhances the pollutant removal efficiency of a basin by trapping the incoming sediment load in one area where it can be easily monitored and removed. For an *enhanced* extended detention basin, the sediment forebay is included in the deep pool allocations of the surface area and storage volume. The target pollutant removal efficiency of an extended-detention basin, as listed in **Table 3.07-1**, is predicated on using a sediment forebay at the inflow points of the basin.

Liner to Prevent Infiltration

Extended-detention basins should have negligible infiltration rates through the bottom of the basin. Infiltration will impair the proper functioning of the basin and may contaminate groundwater, and in areas of Karst, may cause collapse. For an *enhanced* extended-detention basin, excessive infiltration may prevent the shallow marsh from holding water. If infiltration is anticipated, and the area is not suspected to be underlain by Karst, than an infiltration facility, rather than a detention water quality BMP, should be used **or** a liner should be installed in the basin to prevent infiltration.

When using a liner, the following recommendations apply:

1. A clay liner should have a minimum thickness of 12 inches and should comply with the specifications provided in **Table 3.07-3**.
2. A layer of compacted topsoil (minimum 6 to 12 inches thick) should be placed over the liner before seeding with an appropriate seed mixture (refer to VESCH, 1992 edition).
3. Other liner types may be used if supporting documentation is provided verifying the liner material's performance.

TABLE 3.07 - 3
Clay Liner Specifications
Source: City of Austin, 1988

Property	**Test Method (or equal)**	**Unit**	**Specification**
Permeability	ASTM D-2434	cm/sec	1×10^{-6}
Plasticity Index of Clay	ASTM D-423 & D-424	%	Not less than 15
Liquid Limit of Clay	ASTM D-2216	%	Not less than 30
Clay Particles Passing	ASTM D-422	%	Not less than 30
Clay Compaction	ASTM D-2216	%	95% of Standard Proctor Density

Access

A 10 to 12 foot wide access road with a maximum grade of 12% should be provided to allow vehicular access to both the outlet structure area and at least one side of the basin. The road's surface material should be selected to support the anticipated frequency of use and vehicular load without excessive erosion or damage.

Landscaping

A qualified individual should prepare the landscape plan for an extended-detention basin. Appropriate shoreline fringe, riparian fringe and floodplain terrace vegetation must be selected to correspond with the expected frequency and duration of inundation. Additional criteria for landscaping may be found in **Minimum Standard 3.05, Landscaping, VSMH**. For establishment of vegetation in the marsh area, refer to **BMP Guidance #3-E, Constructed Stormwater Wetland.**

The vegetation should be planted in soil that is appropriate for the plants selected. Soil tests showing the adequacy of the soil or a soil enhancement plan should be submitted with the overall basin design. The soil substrate must be soft enough to permit easy installation of the plants. If the basin soil has been compacted or vegetation has formed a dense root mat, the upper 6 inches of soil should be disked before planting. If soil is imported, it should be laid at least 6 inches deep to provide sufficient depth for plant rooting to occur.

Buffer Zone

A vegetated buffer strip should be maintained beside the basin. The strip should be a minimum of

20 feet wide, as measured from the maximum water surface elevation. Refer to **Minimum Standard 3.05, Landscaping, VSMH**.

FIGURE 3.07 - 4
Flow Path/Short-Circuiting

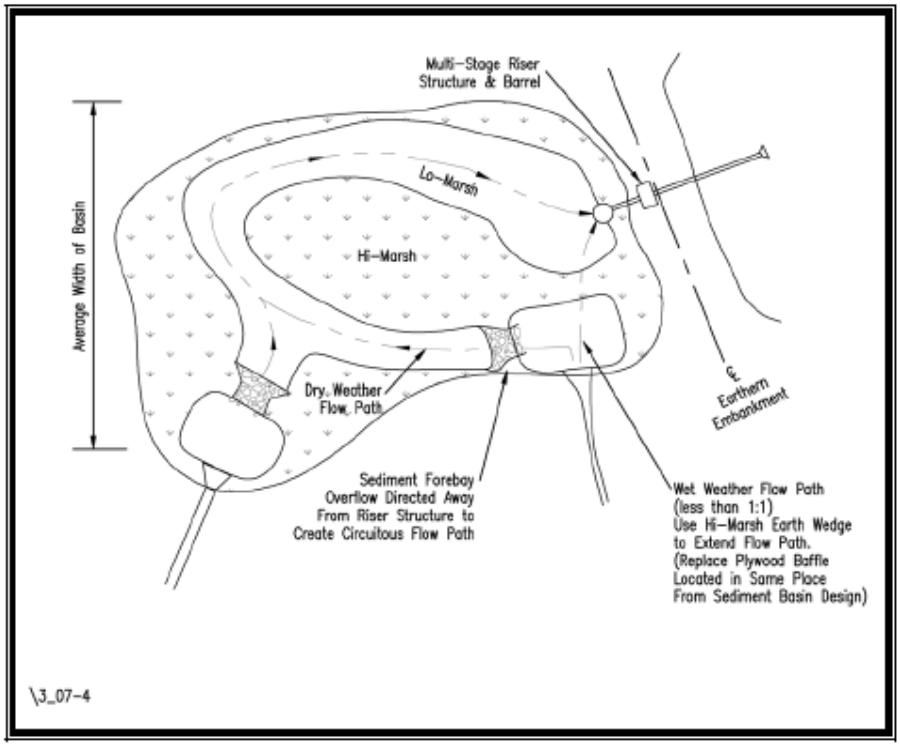

Construction Specifications
The construction specifications for stormwater extended-detention and *enhanced* extended-detention basins outlined below should be considered minimum guidelines. More stringent or additional specifications may be required based on individual site conditions.

Overall, widely accepted construction standards and specifications for embankment ponds, such as those developed by the USDA Natural Resource Conservation Service or the U.S. Army Corps of Engineers, should be followed to build an impoundment.

Further guidance can be found in Chapter 17 of the Natural Resource Conservation Service's Engineering Field Manual. Specifications for the work should conform to methods and procedures specified for installing earthwork, concrete, reinforcing steel, pipe, water gates, metal work, woodwork and masonry and any other items that apply to the site and the purpose of the structure. The specifications should also satisfy any requirements of the local plan approving authority. The following minimum standards from the Virginia Stormwater Management Handbook contain guidance and construction specifications for various components of these facilities: **3.01, Earthen Embankment**; **3.02, Principal Spillway**; **3.03,Vegetated Emergency Spillway**; **3.04, Sediment Forebay**; **3.05, Landscaping**, and **3:09, Constructed Wetland**.

Maintenance and Inspections

The following maintenance and inspection guidelines are not intended to be all-inclusive. Specific facilities may require other measures not discussed here. The engineer is responsible for determining if any additional items are necessary.

Inspecting and maintaining the structures and the impoundment area should be the responsibility of the local government, a designated group such as a homeowner association, or an individual. A specific maintenance plan should be formulated outlining the schedule and scope of maintenance operations.

General Maintenance

Maintenance and inspection guidelines found in the following Virginia Stormwater Management Handbook minimum standards also apply: **3.01, Earthen Embankment**; **3.02, Principal Spillway**; **3.03, Vegetated Emergency Spillway**; **3.04, Sediment Forebay**, and **3.05, Landscaping**.

Vegetation

The basin's side slopes, embankment and emergency spillway should be mowed at least twice a year to discourage woody growth. More frequent mowing may be necessary in residential areas for aesthetic purposes.

Dry extended-detention basins may have soggy bottoms, making mowing costly and difficult. The use of water-tolerant, hardy, and slow growing grass is recommended for the bottom of these basins. **Vegetation is preferred to an impervious low-flow channel since the channel may interfere with the pollution removal capabilities of the basin**. Specific plant communities may require different levels of maintenance. Upland and floodplain terrace areas, grown as meadows or forests, require very little maintenance, while aquatic or emergent vegetation may need periodic thinning or reinforcement plantings. Note that after the first growing season it should be obvious if reinforcement plantings are needed. If they are, they should be installed at the onset of the second growing season after construction.

Research indicates that for most aquatic plants the uptake of pollutants is stored in the roots, not the stems and leaves (Lepp 1981). Therefore, aquatic plants should not require harvesting before winter plant die-back. There are still many unanswered questions about the long term pollutant storage capacity of plants. Possible aquatic and emergent plant maintenance recommendations may be presented in the future.

Debris and Litter Removal

Debris and litter will accumulate near the inflow points and around the outlet control structure. Such material should be removed periodically. Significant accumulation can clog the low-flow outlet and the upper control openings.

Sediment Removal

Sediment deposition should be continually monitored in the basin. Removal of accumulated sediment is extremely important. A significant accumulation of sediment impairs the pollutant removal capabilities of the basin by reducing the available storage for the water quality volume and/or reducing the available volume for the shallow marsh. In addition, accumulated sediment in the bottom of a basin creates unsightly conditions and chokes out established vegetation.

Unless unusual conditions exist, it is anticipated that accumulated sediment will need to be removed from the basin every 5 to 10 years (MWCOG, 1987). More frequent cleaning of the area around the low flow or extended-detention orifice may be required. The use of a sediment forebay with access for heavy equipment will greatly simplify the removal process. **During maintenance procedures, ensure that any pumping of standing water or dewatering of dredged sediments complies with the VESCH, 1992 edition**. Owners, operators, and maintenance authorities should be aware that significant concentrations of heavy metals (e.g., lead, zinc and cadmium) and some organics, such as pesticides, may be expected to accumulate at the bottom of a basin. Testing of sediment, especially near points of inflow, should be conducted regularly and **before disposal** to find the leaching potential and level of accumulation of hazardous materials. Disposal methods must comply with the health department requirements of the local government.

Inspections

An extended-detention basin and its components should be inspected annually to ensure that they operate in the manner originally intended. If possible, inspections should be conducted during wet weather to determine if the extended-detention time is being achieved. Inspections should be conducted by a qualified individual following the checklist provided in **Chapter 3 Appendix of the Virginia Stormwater Management Handbook**.

Extended Detention Basin – full. Note circuitous flow path.

Enhanced Extended Detention Basin – Shallow Marsh. Note multistage weir principal spillway and deep water pool (18" – 48" depth).

Extended Detention Basin – empty.

Extended Detention Basin – full.

BMP Guidance #3-E
Retention Basin

Definition

A retention basin is a stormwater facility which includes a permanent impoundment, or pool of water, and, therefore, is normally wet, even during non-rainfall periods. Inflows from stormwater runoff may be temporarily stored above this permanent pool.

Purpose

A retention basin provides for long-term water quality enhancement of stormwater runoff. Stormwater inflows may also be temporarily stored above the permanent pool for downstream flood control and channel erosion control. A retention basin is considered one of the most reliable and versatile BMPs available.

Water Quality Enhancement

High removal rates of particulate and soluble pollutants (nutrients) can be achieved in retention basins through *gravitational settling, biological uptake* and *decomposition*. When an even higher degree of pollutant removal efficiency is required, the basin can be ***enhanced*** by using various modifications relating to the size and design of the permanent pool.

Monitoring studies have shown sediment removal efficiencies to range from 50-90%, total phosphorus removal efficiencies to range from 30-90% and soluble nutrient removal efficiencies to range from 40-80%. (MWCOG, 1992). The design elements, physical characteristics, and monitoring techniques varied for each basin studied, which explains the wide range of efficiencies. The target pollutant removal efficiencies assigned to the different design options are presented in **Table 3.06-1**.

TABLE 3.06 – 1

Pollutant Removal Efficiencies for Retention Basins

Type	Sizing Rule	Target Phosphorus Removal Efficiency	Impervious Cover
Retention Basin I	3.0 x WQ Volume	40%	22-37%
Retention Basin II	4.0 x WQ Volume	50%	38-66%
Retention Basin III	4.0 x WQ Volume with Aquatic Bench	65%	67-100%

FIGURE 3.06 - 1
Retention Basin - Plan & Section

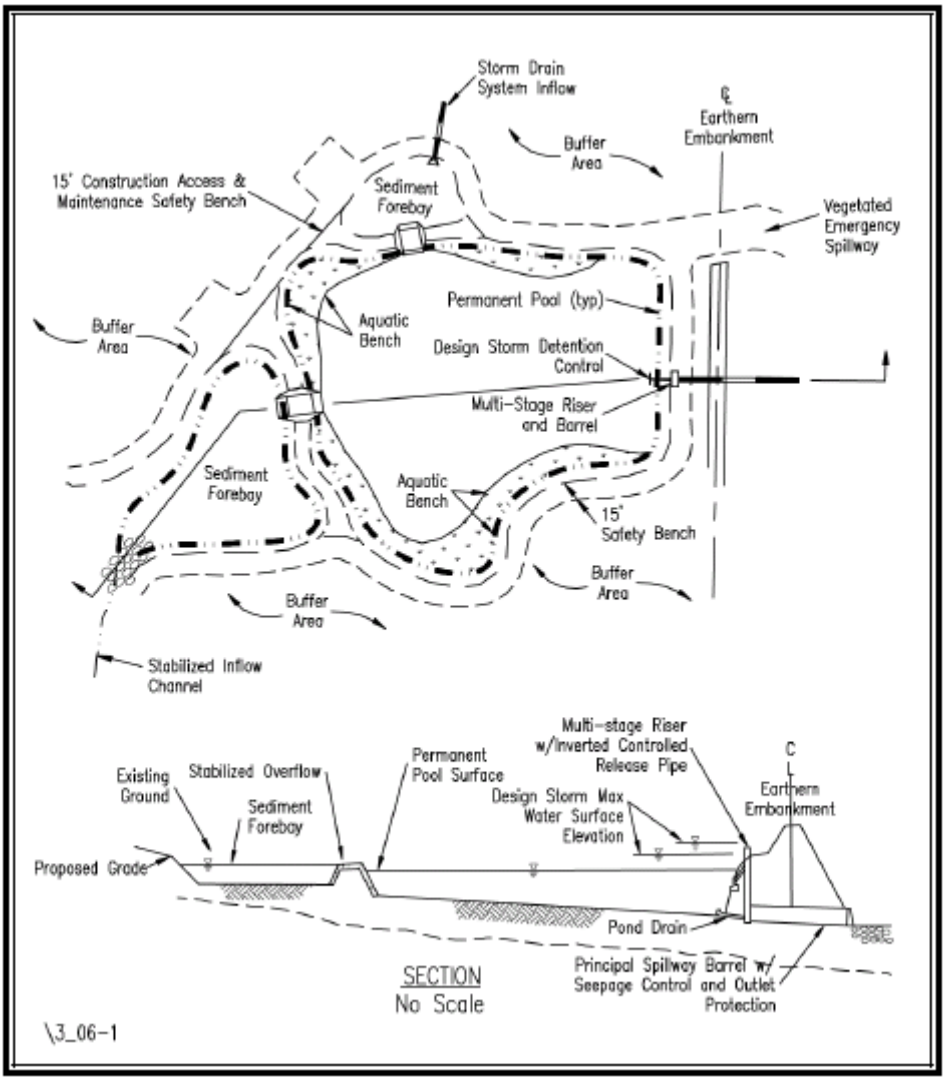

Flood Control

Retention basins which provide flood control are designed with "dry" storage above the permanent pool. This dry storage works in concert with a riser or control structure to reduce the peak rate of runoff from a drainage area. Typically, the design storms selected for flood control (i.e., 2-year, 10-year frequency, etc.) are specified by state and local ordinances, or are based on specific watershed conditions. In either case, the required volume to be stored above the permanent pool can be readily determined using the hydrologic methods discussed in **Chapter 4 of the Virginia Stormwater Management Handbook [VSMH]**. Similarly, a control or spillway structure can be designed using the engineering calculation procedures presented in **Chapter 5 of the VSMH**.

Channel Erosion Control

The storage volume above the permanent pool can also be used to control or reduce channel erosion. Channel erosion protection can be accomplished by reducing the peak rate of discharge, similar to flood control, or by controlling the time over which the peak volume of discharge is released (extended detention), similar to water quality enhancement. **Chapter 5-11 of the VSMH** provides a discussion on the design criteria for channel erosion control.

Conditions Where Practice Applies

Drainage Area

A contributing watershed of at least 10 acres and/or a good source of baseflow should be present for a retention basin to be feasible. Even with 10 acres of contributing watershed, the permanent pool may be susceptible to dry weather drawdowns due to infiltration and evaporation.

(Refer to **Chapter 5, Appendix 5C of VSMH** for water balance calculation procedures.) Dry weather stagnation may result in aesthetic and odor problems for adjacent property owners. Therefore, for residential or high visibility applications, a minimum of 15 to 20 acres of contributing watershed may be more appropriate. Infiltration basins, trenches or extended-detention basins are more suitable for smaller sites. ***Note that excavated retention basins in areas of high groundwater, may be feasible with very small drainage areas. The groundwater elevation should be carefully monitored, however, to verify the design permanent pool elevation.***

A retention basin is recommended for use as a regional or watershed-wide stormwater management facility since its cost per acre treated is inversely proportional to the watershed size. Studies confirm that the most cost-effective application of a retention basin is on larger, more intensely developed sites (Schueler, et. al., 1985).

Development Conditions

Retention basins have the potential for removing high levels of soluble and particulate pollutants which makes them suitable for most types of development. They are appropriate for both high- and low-visibility sites. However, for high-visibility sites, care must be taken to avoid the aesthetic problems associated with stagnation or excessive infiltration of the permanent pool. Maintenance of the permanent pool is not necessarily critical to the retention basin's ability to remove pollutants, but maintenance **is critical** to ensure the BMP's acceptance by adjacent landowners. If adequate space is available, retention basins may also be used for both high and low density residential or commercial developments.

A minimum 20-foot wide vegetated buffer should be provided around a retention basin to help filter out pollutants before they enter the basin. This requirement results in the need for more land, especially for those basins that may already be oversized to enhance their pollutant removal capabilities. It is for this reason that the use of large retention basins may not be a feasible option in developing watersheds where land is at a premium. This strengthens the argument for a regional or watershed approach to stormwater

management. A regional retention or extended-detention basin is not only more cost-effective, it is also more likely to be installed on land that is not suitable for development. (It should be noted, however, that the environmental impacts and appropriate permits must still be considered for such an application.)

Planning Considerations

The success of a retention basin is dependent on the designer's ability to identify any site or downstream conditions that may affect the design and function of the basin. Above all, the facility should be compatible with both upstream and downstream stormwater systems, thus promoting a *watershed approach* in providing stormwater management.

Site Conditions

Existing site conditions should be considered in the design and location of a retention basin. Features such as topography, wetlands, structures, utilities, property lines, easements, etc., may impose constraints on the location or construction of the basin. All retention basins should be a minimum of 20 feet from any structure or property line, and 100 feet from any septic tank/drainfield. (The designer should be aware that an impoundment of water may elevate the local water table which could adversely effect drainfields and structures.) Retention basins should be a minimum of 50 feet from any steep slope (greater than 15%). Alternatively, a geotechnical report must address the potential impact of any retention basin that is to be constructed on or near such a slope. Additional considerations are as follows:

1. **Soils –**

In the past, many designs were accepted based upon soils information compiled from available data, such as NRCS soil surveys. While such a source may be appropriate for a pre-engineering feasibility study, final design and acceptance **should be based on an actual subsurface analysis and a permeability test**, accompanied by appropriate engineering recommendations. The references listed at the end of this standard and at the end of **BMP Guidance #2, Infiltration Practices** provide more detailed information regarding the feasibility analysis of subsurface conditions for various soil types. Due to its complexity, this topic is not covered here. Note that the geotechnical study required for the embankment design (reference **Minimum Standard 3.01, Earthen Embankment in the VSMH**) will often provide adequate data to verify the soil's suitability for a retention basin.

The goal of a subsurface analysis is to determine if the soils are suitable for a retention basin. The textural character of the soil horizons and/or strata units within the subsoil profile should be identified to at least 3 feet below the facility bottom. This information is used to verify the infiltration rate or permeability of the soil. For a retention basin, water inflow (base flow and groundwater) must be greater than water losses (infiltration and evaporation). If the infiltration rate of the soil is too high, then a retention basin may not be an appropriate BMP.

Permeable soils are not suited for retention basins. The depth of the permanent pool can influence the rate at which water will infiltrate through the existing soil. The soil permeability may be such that the basin can support a shallow marsh or constructed wetland. However, as the depth of the permanent pool increases, the increased head or pressure on the soil may increase the infiltration rate. If necessary, a liner of clay,

geosynthetic fabric, or other suitable material may be used in the basin (as specified by a geotechnical engineer). Refer to the design criteria for basin liners.

2. **Rock –**
A subsurface investigation should also identify the presence of rock or bedrock. Excavation of rock may be too expensive or difficult with conventional earth moving equipment, precluding the use of a basin. Blasting the rock for removal may be possible, but blasting may open seams or create cracks in the underlying rock, resulting in an unwanted drawdown of the permanent pool. Blasting of rock is not recommended unless a liner, as described above, is installed.

3. **Karst –**
In regions where Karst topography is prevalent, projects may require thorough soils investigations and specialized design and construction techniques. The presence of karst should be determined **during the planning phase of the project** since it may affect BMP selection, design, and cost.

4. **Existing Utilities–**
Most utility companies will not allow a permanent or temporary pool to be installed over their underground utility lines or right-of-ways. However, if such a site must be used, the designer should obtain permission from the utility company **before designing** the basin. The relocation of any existing utilities should be researched and the costs included in the overall basin cost estimate.

Environmental Impacts

1. **Wetlands –**
Large facilities and/or regional facilities naturally lend themselves to being placed in low lying, and usually environmentally sensitive, areas. Such locations often contain wetlands, shallow marshes, perennial streams, wildlife habitat, etc., and may be protected by state or federal laws. The owner or designer should investigate regional wetland maps and contact appropriate local, state, and federal agencies to verify the presence of wetlands, their protected status, and suitability for a retention basin at the location in question.

With careful planning, it may be possible to incorporate wetland mitigation into a retention basin design. This assumes that the functional value of the existing or impacted wetland can be identified and included, reconstructed, or mitigated for, in the basin. The Virginia Department of Environmental Quality should be contacted for more information regarding wetland mitigation.

2. **Downstream Impacts –**
A retention basin may have an adverse impact on downstream water quality by altering the biological oxygen demand (BOD), dissolved oxygen (DO), temperature, etc., of the water body. This is of special concern in cold water trout streams. The release depth of the control structure, overall pond depth, hydraulic residence time, and other design features can be manipulated to help meet the site specific needs of the downstream channel.

Urban detention and retention basin design should be coordinated with a watershed or regional plan for managing stormwater runoff, if available. In a localized situation, an individual basin can provide effective stream protection for the downstream property if no other areas contribute runoff in a detrimental way to that property. However, an uncontrolled increase in the number of impoundments within a watershed can severely alter natural flow conditions, causing combined flow peaks or increased flow duration. This can ultimately lead to downstream flooding and degradation.

3. **Upstream Impacts –**
The upstream channel must also be considered, especially when the retention basin is to be used to control downstream channel erosion. Erosive upstream flows will not only degrade the upstream channel, but will also significantly increase the maintenance requirements in the basin by depositing large amounts of sediment eroded from the channel bottom.

Water Quality Enhancement

A retention basin is typically selected for its water quality enhancement abilities and/or aesthetic value. The flexibility of providing for additional control components (channel erosion control, flood control, habitat, etc.) increases their value. The permanent pool of a retention basin serves to enhance the quality of the stormwater within it. Studies show that providing a larger permanent pool, and/or adding modifications such as an aquatic bench, sediment forebay, etc., will provide greater and more consistent pollutant removal benefits (refer to the **Design Criteria** section in this standard). Currently, no credit is given for any additional pollutant removal efficiency that may occur with an extended-detention volume stacked on top of the permanent pool of a retention basin.

However, significant improvements in channel erosion control have been reported using extended detention for the 1-year frequency design storm (Galli, MWCOG, 1992). Refer to **BMP Guidance #3-D, Extended Detention Basins**.

A concern in specifying a retention basin is how much land it will occupy. The size of the permanent pool will be based on the desired pollutant removal efficiency. The “dry” storage volume above the permanent pool will be sized for downstream channel erosion and/or flood control. The size of these two components together will determine the size of the basin. ***Preliminary sizing estimates for the permanent pool and “dry” storage volume are recommended during the planning stages to evaluate the feasibility of using a retention basin.***

Since a retention basin is used to remove pollutants, the water quality within the basin will be lowered, thus possibly reducing its desirability for water supply, recreation, and aesthetic purposes. Therefore, the engineer should be aware of the site’s specific runoff components and understand their possible effects on the quality of the stored water. Runoff from highways and streets can be expected to carry significant concentrations of heavy metals such as lead, zinc, and copper. These and other heavy metals may accumulate in the bottom of a facility, creating a potential health and environmental

hazard. If a basin is in a watershed where a significant portion of the runoff is from highways, streets or parking areas, then access to the facility should be limited and warning signs should be posted. Proper disposal of the bottom sediments from these basins may require that they be hauled to an approved facility.

Further, retention basins in residential areas are subject to nutrients from lawn fertilizers and other urban sources. Excess nutrients can lead to algae and other undesirable vegetation which can diminish the aesthetic and recreational value of the basin.

Flooding and Channel Erosion Control

Flood control and downstream channel erosion are managed by providing additional storage volume, referred to as dry storage, above the permanent pool, and properly sizing a discharge opening in the riser structure.

Sediment Control

A stormwater retention basin may initially serve as a sediment control basin during the project's construction. A sediment basin is designed for the maximum drainage area expected to contribute to the basin during the construction process, while a permanent stormwater basin is designed based on post-developed land use conditions. When designing a facility to do both, the basin should be sized using the most stringent criteria, sediment control or stormwater management, which will result in the largest storage volume. The design elevations should be set with final clean out and conversion in mind. The bottom elevation of the permanent SWM basin should be lower than the design bottom of the temporary E&S basin. This allows for the establishment of a solid permanent bottom after sediment is removed from the facility.

The riser and barrel hydraulics and materials should be designed as the permanent stormwater control structure. However, the permanent riser may be temporarily modified to provide a sediment basin with wet and dry storage as required by the Virginia Erosion and Sediment Control Handbook, (VESCH), 1992 edition.

Safety

Basins that are readily accessible to populated areas should include all possible safety precautions. Steep side slopes (steeper than 3H:1V) at the perimeter should be avoided and dangerous outlet structures should be protected by enclosures. If the basin's surface area exceeds 20,000 square feet, an aquatic bench should be provided. (Refer to the **Design Criteria for Aquatic Bench**.)

Maintenance

Retention basins have shown an ability to function as designed for long periods without routine maintenance. However, some maintenance is essential to protect the aesthetic and wildlife properties of these facilities.

Vehicular access to the permanent pool area and release structure must be provided to allow for long-term maintenance operations (such as sediment removal) and repairs, as needed. The incorporation of a *sediment forebay* at the inflow points into the basin will

help to localize disturbance during sediment removal operations. An onsite area designated for sediment dewatering and disposal should also be included in the design. Care must be taken in the disposal of sediment that may contain an accumulation of heavy metals. **Sediment testing is recommended prior to sediment removal to assure proper disposal**.

Allowing participation by adjacent landowners or visitors is very helpful, especially if the facility serves as a recreational facility. Maintenance needs that are observed and addressed early will help to lower the overall maintenance costs. Routine maintenance inspections, however, should be conducted by authorized personnel. In all cases, access easements should be provided to facilitate inspection and maintenance operation.

Design Criteria

This section provides recommendations and minimum criteria for the design of stormwater retention basins intended to comply with the Virginia Stormwater Management program. It is the designer's responsibility to decide which aspects of the program apply to the particular facility being designed and if any additional design elements are required. The designer should also consider the long-term functioning of the facility in the selection of materials for the structural components.

Hydrology and Hydraulics

Chapter 4, **Hydrologic Methods** and **Chapter 5**, **Engineering Calculations of the VSMH** should be used to develop the pre- and post-developed hydrology for a basin's contributing watershed, to design and analyze the hydraulics of the riser and barrel system, and to design the emergency spillway.

The design of the riser and barrel system should take into account any additional storage provided above the permanent pool for peak discharge control. The 2-year storm should be used in *receiving channel adequacy* calculations and the 10-year storm should be used for *flood control* calculations.

The contributing drainage area should be a minimum of 10 acres with an adequate base flow; 15 to 20 acres is more appropriate to sustain a healthy permanent pool. Note that this requirement may preclude the use of the Modified Rational Method for the basin's design.

Embankment

The design of the earthen embankment for a retention basin should comply with **Minimum Standard 3.01, Earthen Embankment in the VSMH**. The requirements for geotechnical analysis, seepage control, maximum slopes and freeboard are particularly appropriate.

Principal Spillways

The design of the principal spillway and barrel system, anti-vortex device, and trash racks should comply with **Minimum Standard 3.02, Principal Spillway of the VSMH**.

Emergency Spillway

An emergency spillway that complies with **Minimum Standard 3.03, Vegetated Emergency Spillway in the VSMH** should be provided when possible, or appropriate.

Sediment Basin Conversion

When a proposed stormwater facility is used as a temporary sediment basin, the conversion to the permanent facility should be completed after final stabilization and approval from the appropriate erosion and sediment control authority.

In most cases the design criteria for the temporary sediment basin will require more storage volume (combined wet and dry) than that of a stormwater basin. In such cases, the extra volume should be allocated to the component of the facility that would derive the greatest benefit from the increased storage. This will depend on the primary function of the facility (i.e., water quality enhancement, flood control, or channel erosion control). If modifications to the riser structure are required as part of the conversion to a permanent stormwater facility, they should be designed so that a) *the structural integrity of the riser is not threatened*, and b) *large construction equipment is not needed within the basin*. Any heavy construction work required on the riser should be completed during its initial installation. It is **NOT** recommended to install a temporary riser structure in the sediment basin and then replace it with a permanent riser after final stabilization. This may affect the structural integrity of the existing embankment and barrel.

The following additional criteria should be considered for a conversion:

1. Final elevations and a complete description of any modifications to the riser structure's geometry should be shown in the approved plans.
2. The wet storage area must be dewatered following the methods outlined in the VESCH, 1992 edition.
3. Sediment and other debris should be removed to a contained spoil area. Re-grading of the basin may be necessary to achieve the final design grades and to provide an adequate topsoil layer to promote final stabilization.
4. Final modifications to the riser structure should be carefully inspected for watertight connections and compliance with the approved plans.
5. Final landscaping and stabilization should be per the VESCH, 1992 edition, and **Minimum Standard 3.05, Landscaping** of the VSMH and the Section 35.1-25.1 of the City Code.

Permanent Pool

When designing a permanent pool for water quality benefits, certain physical and hydraulic factors can be manipulated to achieve a desired *pollutant removal efficiency*. These factors, which also influence the downstream water quality, include the permanent pool's *volume*, *depth*, *geometry*, *hydraulic residence time*, and *release depth*.

1. **Volume –**

   Increasing the *volume* of the permanent pool increases the *residence time*, resulting in an increase in the pollutant removal efficiency of the permanent pool. **Table 3.06-1** provides the target pollutant removal efficiencies associated with different sizing rules.

2. **Depth –**
The *depth* of the permanent pool will affect several features of a retention basin including a) *aquatic plant selection*, b) *fish and wildlife habitat selection*, and c) *the rate at which nutrients are cycled*. Retention basins and artificial marshes built too shallow will not support fish populations year round. Basins built too deep may stratify, creating anaerobic conditions that may result in the resolubilizing of pollutants that are normally bound in the sediment. The release of such pollutants back into the water column can seriously reduce the effectivenes of the BMP and may cause nuisance conditions.

The depth of a stormwater management basin should vary to include as much diversity as possible, with an average depth of 3 to 6 feet. Approximately 15% of the basin area should be less than 18 inches deep. (Schueler, 1987). This can be accomplished by using an aquatic bench along the perimeter of the permanent pool as shown in **Figure 3.06-2**. **Table 3.06-2** below provides recommended surface area - pool depth relationships.

TABLE 3.06 - 2
Recommended Surface Area - Pool Depth Relationships for Retention Basins
Source: Washington State D.O.E.

BMP	**Pool Depth (*ft.*)**	**Surface Area (*as % of total BMP surface area*)**
Retention Basin	0 - 1.5	15%
	1.5 – 2	15%
	2 - 6	70%

3. **Geometry –**
The geometry of a stormwater basin and the associated drainage patterns are usually dictated by site topography and development conditions. However, the alignment of the incoming pipes should be manipulated relative to the release structure to the greatest extent possible to avoid *short-circuiting* of the incoming runoff. *Short-circuiting* is the condition where incoming runoff passes through the basin without displacing the old water. This can be avoided by maximizing the distance between the inlet and outlet structures. It can also be avoided by designing a *meandering* flow path through the basin, rather than a straight line flow path. In either case, a length-to-width ratio of 2:1 should be maintained. If site conditions prevent using the proper ratio, then baffles made from gabion baskets, earthen berms or other suitable materials may be used to lengthen the flow path (see **Figure 3.06-3**).

A retention basin should be multi-celled with at least two cells and preferably three. The first cell can be used as a sediment forebay to trap coarse sediments and reduce turbulence that may cause re-suspension of sediments. This first cell should be easily accessible for maintenance purposes. The second (and third) cell provides for the further settling of pollutants and any biological processes.

4. **Hydraulic Residence Time –**
Hydraulic residence time is the permanent pool volume divided by the average outflow discharge rate. The longer the residence time, the higher the pollutant removal efficiency (Driscoll, 1983, Kulzer, 1989). A retention basin used for channel erosion control and flood control will usually achieve higher pollutant removal rates. This is due to the increased residence time associated with the peak discharge control above the permanent pool. The hydraulic residence time would be a factor in the design of a retention basin with a permanent pool volume based on an impervious area which is relatively small when compared to the contributory drainage area. In this case, the total drainage area discharge will turn over, or replace, the volume of the "undersized" pool volume before it has achieved an adequate residence time. Optimal pollutant removal efficiency is generally associated with a *mean annual hydraulic residence* time of 14 to 30 days (Driscoll, 1988; Kulzer, 1989; Schueler, 1987).

5. **Release Depth –**
The best water quality in a retention basin's permanent pool is usually at or near the surface (Galli, 1988; Redfield, 1983). Under normal dry weather conditions, the concentrations of total dissolved solids, phosphorus, and nitrogen generally decrease in the upper portions of the water column due to physical settling and algal and biological assimilation (Galli, 1992). This suggests that subsurface releases have high levels of nutrients and suspended solids. In addition, deeper basins usually have very low levels of dissolved oxygen in the bottom portions of the water column.

In contrast, the water at or near the surface of a retention basin is warmer because of solar heating of the basin and heated stormwater inflow. This resembles the cycling process of water in natural lakes and water bodies. However, the proximity of a retention basin to development (i.e., impervious surfaces) may lead to an excessive heat buildup from the incoming runoff during the warmer months. Therefore, a release depth of approximately 18 inches from the water surface is recommended (Galli, 1992) to avoid extremes in temperature, nutrient levels, and dissolved oxygen (see **Figure 3.06-4**).

It should be noted that inexpensive design modifications can be incorporated into the design of a retention facility to mitigate downstream impacts such as: a) *oversizing the barrel and adding surgestone or rip rap to the invert to help re-aerate the basin discharge* (Schueler, 1987), and b) *providing shade by planting (or saving) trees around the perimeter of the basin to help lower surface water temperature*.

If the receiving stream supports a trout population, the designer should contact the Department of Game and Inland Fisheries for additional measures to protect the downstream habitat.

FIGURE 3.06 - 2
Varying Depth of Permanent Pool

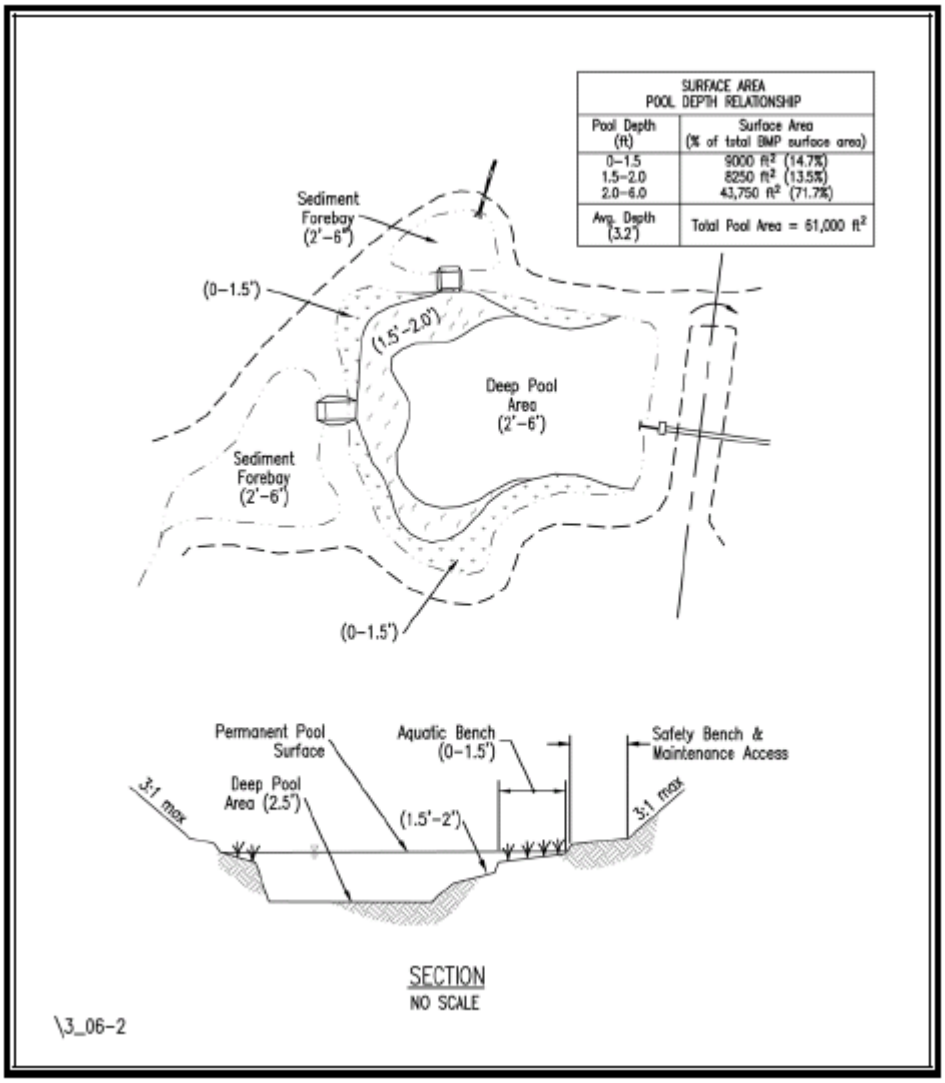

FIGURE 3.06 - 3
Short-Circuiting

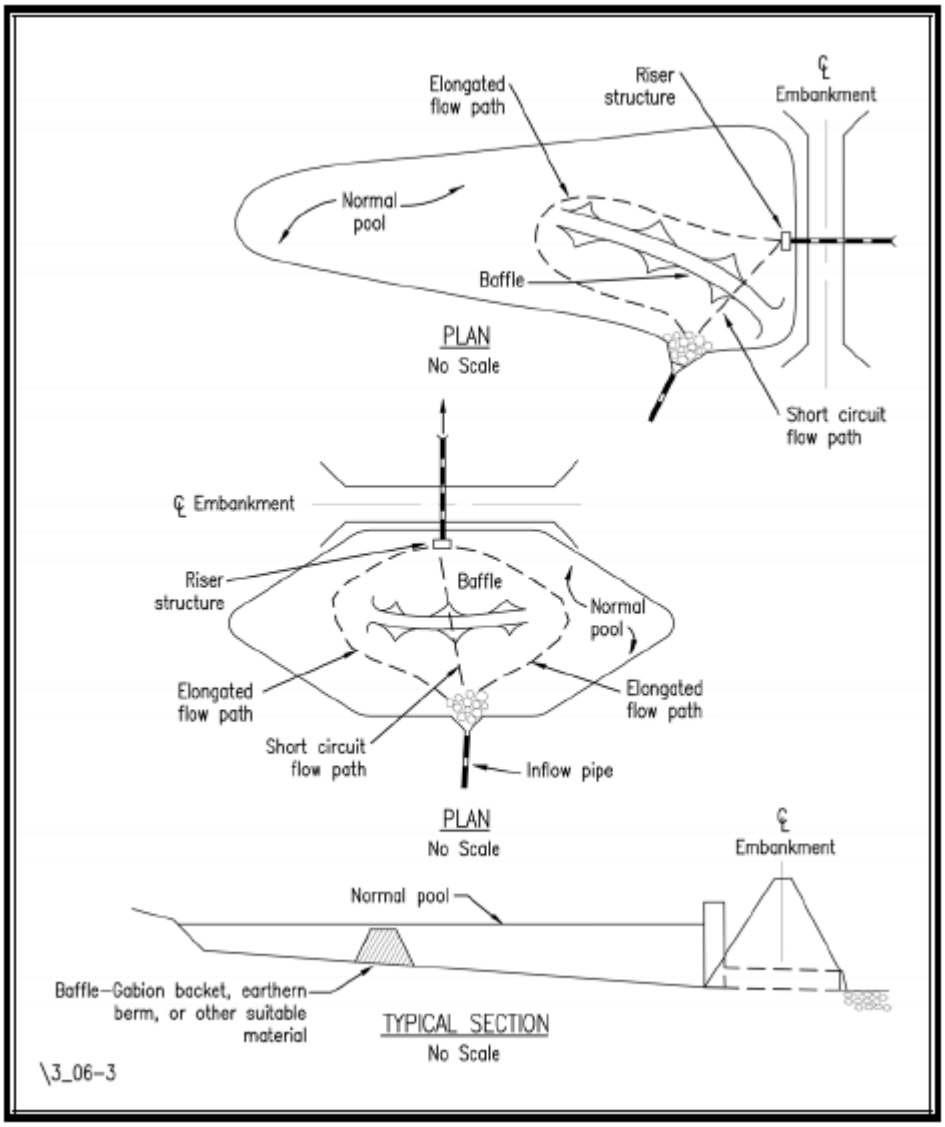

FIGURE 3.06 - 4
Typical Retention Basin Control Structure

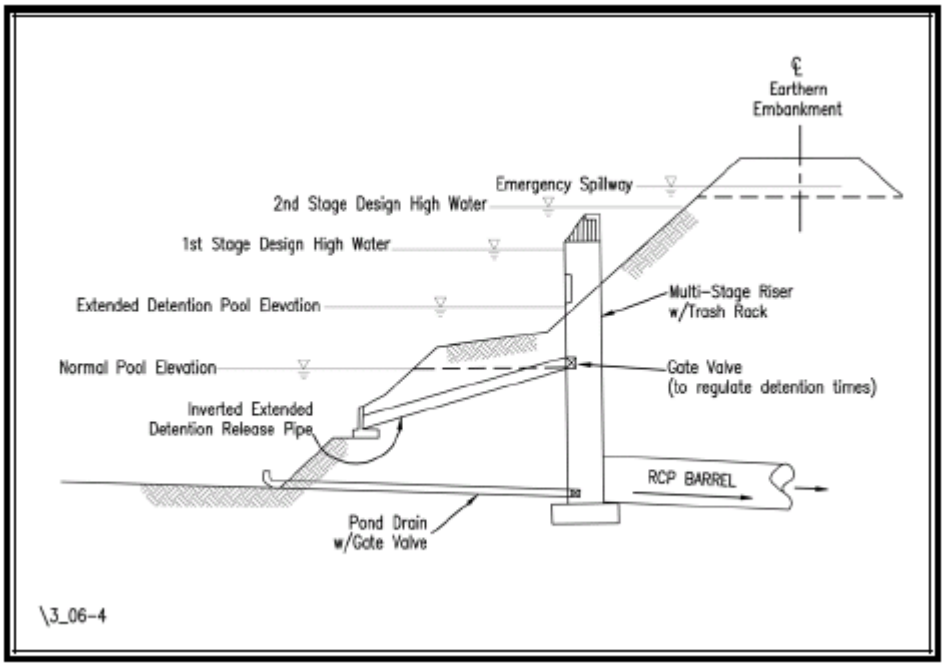

Aquatic Bench

The pollutant removal efficiency of a retention basin can be further enhanced by adding an *aquatic bench*. An aquatic bench is a 10 to 15 foot wide area that slopes from zero inches at the shorelineto between 12 and 18 inches deep in the basin (see **Figure 3.06-5**). This bench provides suitable conditions for a variety of aquatic plants and emergent vegetation. Specific landscaping requirements for an aquatic bench should be provided on the landscaping plan per **Minimum Standard 3.05, Landscaping in the VSMH**.

Most important, an aquatic bench augments the pollutant removal capabilities of a retention basin by providing an environment for aquatic vegetation and associated algae, bacteria and other microorganisms that reduce organic matter and nutrients (Schueler, 1987). In addition, aquatic bench vegetation provides an ideal habitat for wildlife, such as waterfowl and fish, and for predator insects that feed on mosquitoes and other nuisance insects.

An aquatic bench also serves to stabilize and protect the shoreline from erosion resulting from fluctuating water levels, and provides a safety feature by eliminating the presence of a steep submerged slope next to the shoreline.

The increase in pollutant removal efficiency associated with the establishment of an aquatic bench is **approximated** based on available information. Note that discharge monitoring may indicate much higher or lower values since many variables exist in any given stormwater basin design and the efficiencies are estimated.

Sediment Forebay

A *sediment forebay* will help to postpone overall basin maintenance by trapping incoming sediments at a specified location. The forebay should be situated and designed per **BMP Guidance #3-A, Sediment Forebays**. Usually, a sediment forebay is placed at the outfall of the incoming storm drain pipes or channels directed toward the basin and is situated to provide access for maintenance equipment.

A sediment forebay enhances the pollutant removal efficiency of a basin by trapping the incoming sediment load in one area, where it can be easily monitored and removed. The *target pollutant removal efficiency* of a retention basin, as listed in **Table 3.06-1**, is predicated on the use of sediment forebays at the inflow points to the basin.

Liner to Prevent Infiltration

A retention basin should have negligible infiltration through its bottom. Infiltration may impair the proper functioning of the basin and may contaminate groundwater. Where infiltration is anticipated, or in areas underlain by karst topography then a retention or detention facility should **not** be used unless an impervious liner is installed. When using a liner, the specifications provided in **Table 3.06-3** for clay liners and the following recommendations apply:

1. A clay liner should have a minimum thickness of 12 inches.
2. A layer of compacted topsoil (minimum thickness 6 to 12 inches) should be placed over the liner before seeding with an appropriate seed mixture (refer to the VESCH, 1992 edition.)
3. Other liners may be used provided the engineer can supply supporting documentation that the material will achieve the required performance.

In many cases, the fine particulates and suspended solids in the water column of a new retention basin will settle out and quickly clog the the pores of the bottom soil. However, a geotechnical analysis should address the potential for infiltration and, if needed, specify liner materials.

Safety

The side slopes of a retention basin should be no steeper than 3H:1V and should be stabilized with permanent vegetation. If the basin surface exceeds 20,000 square feet, an aquatic bench should be provided to serve as a safety feature. Fencing may also be required by local ordinance.

Access

A 10 to 12-foot-wide access road with a maximum grade of 12% should be provided to allow vehicular access to both the outlet structure area and at least one side of the basin. The road's surface material should be selected to support the anticipated frequency of use and the anticipated vehicular load without excessive erosion or damage.

TABLE 3.06 - 3
Clay Liner Specifications
Source: City of Austin, 1988

Property	Test Method (or equal)	Unit	Specification
Permeability	ASTM D-2434	cm/sec	1×10^{-6}
Plasticity Index of Clay	ASTM D-423 & D-424	%	Not less than 15
Liquid Limit of Clay	ASTM D-2216	%	Not less than 30
Clay Particles Passing	ASTM D-422	%	Not less than 30
Clay Compaction	ASTM D-2216	%	95% of Standard Proctor Density

Landscaping
A qualified individual should prepare the landscape plan for a retention basin. Appropriate *shoreline fringe*, *riparian fringe* and *floodplain terrace vegetation* must be selected to correspond with the expected frequency and duration of inundation. Selection and installation guidelines should be per **Minimum Standard 3.05, Landscaping in the VSMH**.

Vegetation should be planted in soil that is appropriate for the plants selected. Soil tests showing the adequacy of the soil or a soil enhancement plan should be submitted with the overall basin design.

The soil substrate must be soft enough to permit easy installation of the plants. If the basin soil has been compacted or vegetation has formed a dense root mat, the upper 6 inches of soil should be disked before planting. If soil is imported, it should be laid at least 6 inches deep to provide sufficient depth for plant rooting to occur.

Buffer Zones
A vegetated buffer strip should be maintained beside the basin. The strip should be a minimum of 20 feet wide, as measured from the maximum water surface elevation. Refer to **Minimum Standard 3.05, Landscaping in the VSMH**.

FIGURE 3.06 - 5
Typical Retention Basin Aquatic Bench - Section

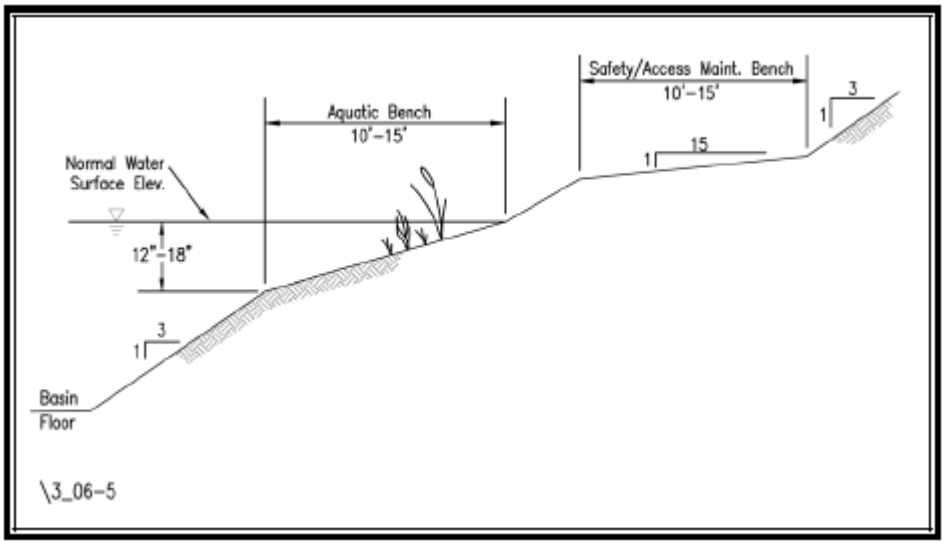

Construction Specifications

The construction specifications for stormwater retention basins outlined below should be considered minimum guidelines. More stringent or additional specifications may be required based on individual site conditions.

Overall, widely accepted construction standards and specifications for embankment ponds and reservoirs, such as those developed by the USDA Natural Resource Conservation Service or the U.S. Army Corps of Engineers, should be followed to build an impoundment.

Further guidance can be found in Chapter 17 of the Natural Resource Conservation Service's Engineering Field Manual. Specifications for the work should conform to methods and procedures indicated for installing earthwork, concrete, reinforcing steel, pipe, water gates, metal work, woodwork and masonry and any other items that are apply to the site and the purpose of the structure. The specifications should also satisfy any requirements of the local plan approving authority.

The following VSMH minimum standards contain guidance and construction specifications for various components of retention basins: **3.01, Earthen Embankment**; **3.02, Principal Spillway**; **3.03, Vegetated Emergency Spillway**; **3.04, Sediment Forebay**; and **3.05, Landscaping** .

Maintenance and Inspections

The following maintenance and inspection guidelines are not intended to be all-inclusive. Specific facilities may require other measures not discussed here. The engineer is responsible for determining if any additional items are necessary.

Inspecting and maintaining the structures and the impoundment area should be the responsibility of either the local government, a designated group such as a homeowner's association or an individual. A specific maintenance plan should be formulated outlining the schedule and scope of maintenance operations.

Any standing water pumped during the maintenance operation must be disposed of per the VESCH, 1992 edition and any local requirements.

General Maintenance

Maintenance and inspection guidelines found in the following VSMH minimum standards apply: **3.01, Earthen Embankment**; **3.02, Principal Spillway**; **3.03, Vegetated Emergency Spillway**; **3.04, Sediment Forebay**; and **3.05: Landscaping**.

Vegetation

The basin's side slopes, embankment and emergency spillway should be mowed at least twice a year to discourage woody growth. For aesthetic purposes, more frequent mowing may be necessary in residential areas

Specific plant communities may require different levels of maintenance. Upland and floodplain terrace areas, grown as meadows or forests, require very little maintenance, while aquatic or emergent vegetation may need periodic thinning or reinforcement plantings. Note that after the first growing season, it should be obvious if reinforcement plantings are needed. If they are, they should be installed at the onset of the second growing season after construction.

Research indicates that for most aquatic plants the uptake of pollutants is stored in the roots, not the stems and leaves (Lepp 1981). Therefore, aquatic plants should not require harvesting before winter plant die-back. There are still many unanswered questions about the long term pollutant storage capacity of plants. It is possible that aquatic and emergent plant maintenance recommendations may be presented in the future.

Debris and Litter Removal

Debris and litter will accumulate near the inflow points and around the outlet control structure. Such material should be removed periodically. Also, as the water level rises during storm events, floatables accumulate around the grate or trash rack of the control structure. If a flat horizontal trash rack is used, floating debris will become lodged on the trash rack, which will remain clogged until it is manually cleaned. A significant accumulation can clog the riser structure. The use of an angled trash rack is recommended to allow any accumulated debris to slide off as the water level drops.

Sediment Removal

Sediment deposition should be continually monitored in the basin. Removal of any accumulated sediment, in the sediment forebay or elsewhere, is extremely important. A significant accumulation of sediment impairs the pollutant removal capabilities of the basin by reducing the permanent pool volume. The deposited sediment also becomes prone to re-suspension during heavy flow periods.

Unless unusual conditions exist, accumulated sediment should be removed from the sediment forebay and possibly other deep areas within the permanent pool every 5 to 10 years. The use of a sediment forebay with access for heavy equipment will greatly simplify the removal process. **During maintenance procedures, ensure that any pumping of standing water or dewatering of dredged sediments complies with the VESCH, 1992 edition**.

Owners, operators, and maintenance authorities should be aware that significant concentrations of heavy metals (e.g., lead, zinc and cadmium) and some organics, such as pesticides, may be expected to accumulate at the bottom of a retention basin. Testing of sediment, especially near points of inflow, should be conducted regularly and **before disposal** to establish the leaching potential and level of accumulation of hazardous materials. Disposal methods must comply with applicable state and local regulations (e.g., for special waste).

Inspections

A retention basin and its components should be inspected annually, at a minimum, to ensure that they operate in the manner originally intended. Items in need of repair should be addressed promptly and as specified in the comprehensive maintenance program. Detailed inspections by qualified person(s) should address the following areas/concerns:

- Dam settling, woody growth, and signs of piping
- Signs of seepage on the downstream face of the embankment
- Condition of grass cover on the embankment, basin floor and perimeter
- Riprap displacement or failure
- Principal and emergency spillway meet design plans for operation
- Outlet controls, debris racks and mechanical and electrical equipment
- Outlet channel conditions
- Inlet pipe conditions
- Safety features of the facility
- Access for maintenance equipment
- Sediment accumulation
- Debris and trash accumulation
- Erosion of the embankment or side slopes

Design Procedures

1. Determine if the anticipated development conditions and drainage area are appropriate for a stormwater retention basin BMP (*Minimum drainage area of 10 acres and/or base flow*).
2. Determine if the soils (permeability, bedrock, Karst, embankment foundation, etc.) and topographic conditions (slopes, existing utilities, environmental restrictions) are appropriate for a stormwater retention basin BMP.
3. Determine any additional stormwater management requirements (channel erosion, flooding) for the project.
4. Locate the stormwater retention basin on the site.
5. Determine the hydrology and peak discharges of the contributory drainage area for each of the required design storms (**Chapter 4, Hydrologic Methods**).

6. Calculate the permanent pool volume and approximate storage volume requirements (**Chapter 5, Engineering Calculations, VSMH**).
7. Design the embankment (VSHM **Min. Std. 3.01**), principal spillway (VSHM **Min. Std. 3.02**), emergency spillway (VSHM **Min. Std. 3.03**), sediment forebay (VSHM **Min. Std. 3.04**), landscaping plan (VSHM **Min. Std. 3.05**), and the permanent pool and other components of a stormwater retention basin BMP (VSHM **Min. Std. 3.06**) using VSHM **Chapter 5, Engineering Calculations**, and the Minimum Standards listed.

- permanent pool depth
- Permanent pool geometry
- release depth
- aquatic bench
- pond drain

8. Design final grading of basin.

- landscape plan
- 20-foot buffer area
- safety (3:1 slopes with bench)
- access

9. Establish specifications for sediment control and sediment basin conversion (if required).
10. Establish construction sequence and construction specifications.
11. Establish maintenance and inspection requirements.

Refer to **Appendix-3A of the VSHM** for **Design and Plan Review**, **Construction Inspection**, and **Operation and Maintenance** Checklists.

Retention basin with small island.

Retention basin in ultra-urban setting (under construction).

Retention basin – Note flat slopes with "rough" edge and aquatic bench provided as safety and pollutant removal features.

<u>BMP Guidance #3-F</u>
Stormceptor

Definition

Stormceptor is a precast, modular, vertical cylindrical tank, which is divided into an upper bypass chamber and a lower storage/separation chamber. Under normal design flow operating conditions flow enters the structure through the upper chamber and is diverted by a U-shaped weir through a downpipe and into the lower separation/holding, or treatment, chamber. The downward flow is redirected horizontally around the circular walls of the separation chamber by a tee-fitting on the downpipe outlet. This circular flow, as well as gravitational settling, traps sediments and other particulate pollutants (as well as any pollutants which adsorb to the particulates) at the bottom of the chamber.

Water exits the lower chamber through a submerged outlet riser pipe. The bottoms of the inlet downpipe and the outlet riser pipe are submerged and set at the same elevation (the elevation that provides the oil/floatable storage above the pipes, and the solids/sediment storage below the pipes). The submerged outlet riser pipe prevents trapped floatables from exiting the structure. This configuration prevents the inflow and discharge from creating turbulent flow conditions within the lower treatment chamber, thus avoiding resuspension and export of previously trapped pollutants during high flow, or "bypass," storm events.

There are no moving parts and no external power requirements for the *Stormceptor*.

Overflow – During-high flow periods, stormwater floods over the diversion weir and continues through the upper bypass chamber into the downstream sewer. This rapid activity creates pressure equalization across the bypass chamber, thus decreasing the flow through the lower treatment chamber, and preventing scour and resuspension of previously trapped materials.
Hydraulics – The overflow of the system is controlled by the incoming velocity and the hydraulics of the diversion weir. This system will cause a slight backwater condition in theupstream conveyance system.

Planning Considerations

Stormceptor is precast and comes in various sizes and is designed for all types of land uses. The system is engineered for traffic loading and can be installed as a manhole structure on an existing system (as a retrofit) or on a new system where water quality enhancement is required. **Target Pollutants** – *Stormceptor* is designed to capture sediment, total suspended solids (TSS), trash, organic material, and floatable oil and grease. In addition, many other urban pollutants which adsorb to sediments and particulates can also be trapped by the structure.

Design Criteria

The design criteria for the *Stormceptor* should be obtained from the manufacturer. All designs should be reviewed by the manufacturer to insure that the system is appropriately designed and sized.

Maintenance and Construction

It is generally recommended that the system be maintained (full pump-out) once per year. This frequency may have to be adjusted to a shorter interval once loading rates are determined. Regular inspections will help determine the required frequency of cleaning. More frequent inspections are appropriate where oil spills occur regularly. Maintenance is completed using a conventional vacuum truck.

Contact:

Mr. Vince Berg, P.E.
Stormceptor Corporation
600 Jefferson Plaza
Suite 304
Rockville, Maryland 20852
Phone: 1-800-762-4703

FIGURE 3.15-1
Stormceptor - Normal Flow Conditions

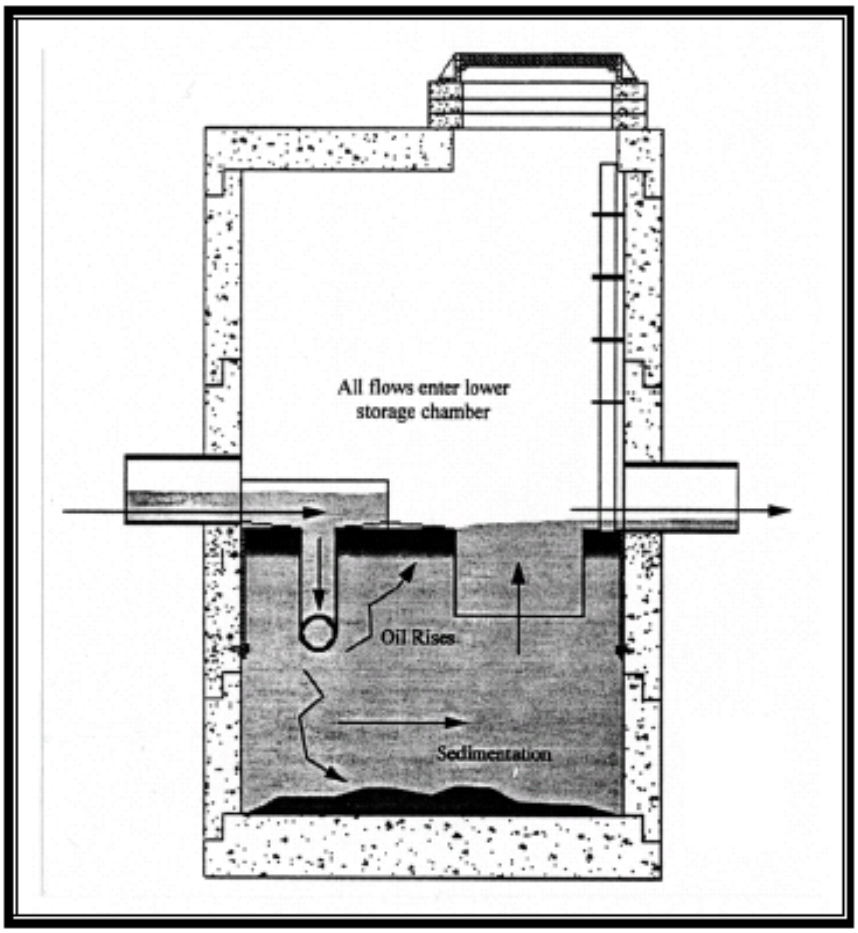

FIGURE 3.15-2
Stormceptor - High Flow Conditions

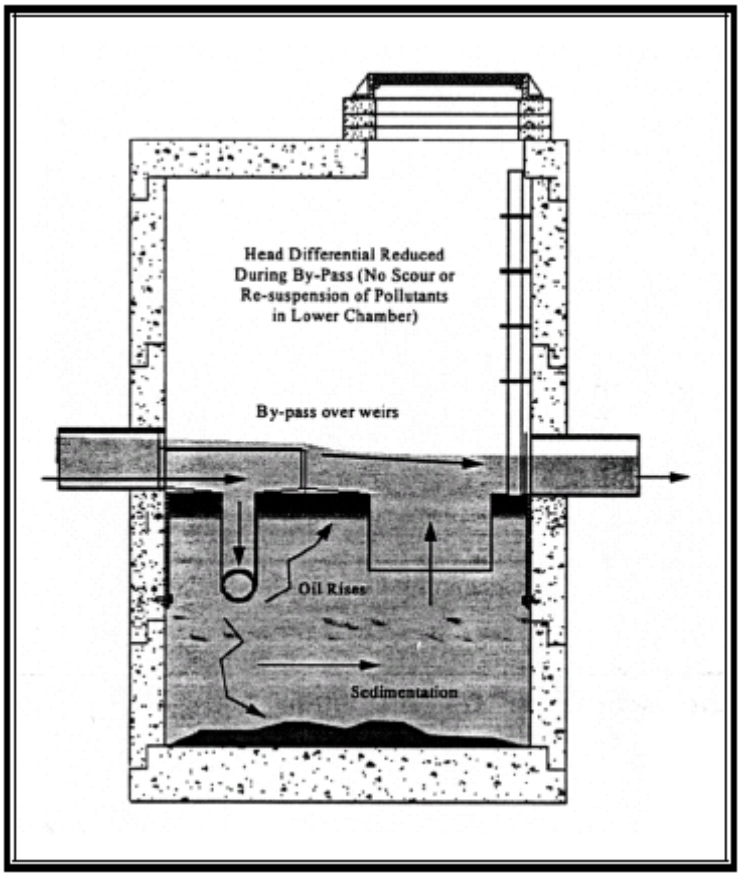

<u>BMP Guidance #3-G</u>
Vortechs Stormwater Treatment System

Definition

The *Vortechs Stormwater Treatment System* is a precast rectangular unit with three chambers. The first chamber is referred to as the grit chamber and consists of a 1/4-inch thick aluminum cylinder with openings to release water at a controlled rate. The flow enters this chamber at a tangent to create a swirling motion that directs settlable solids towards the center. The flow is slowly released from the swirl concentrator into the oil chamber. The oil chamber has a barrier which traps oil and grease and other floatables. The final chamber is the flow control chamber, which forces water to back up in the structure, this reducing the inflow velocities and turbulence.

There are no moving parts and no external power requirements for the *Vortechs System.*

Overflow - As the rate of runoff increases, the flow control chamber forces the runoff to fill the *Vortechs* structure. As this occurs, the swirling action in the grit chamber increases, keeping sediments and other material concentrated at the center of the chamber. The flow will back up to a level established by the elevation of the release openings within the overflow chamber. This provides the ability to achieve flow attenuation within the storage capacity of the upstream storm drainage system. If additional flow attenuation or quantity controls are needed, the elevation of the *Vortechs System* can be manipulated to back up water into a detention facility. Because the swirling action increases as the inflow velocity increases, resuspension of previously deposited material during high flows is eliminated.
Hydraulics - The hydraulics of the *Vortechs System* allow for the treatment of runoff from frequent storms as well as the flow from larger, less frequent storms. Larger storms will cause runoff to back up in the drainage system as the storage volume within the structure is above the inflow pipes.

Planning Consideration

The *Vortechs Stormwater Treatment System* is precast and comes in various sizes and is designed for all types of land uses. The system can be engineered for traffic loading, and depending on the invert elevations can be installed on an existing pipe system (as a retrofit) or on a new system where water quality enhancement is required.
Target Pollutants – The *Vortechs System* is designed to capture sediment as fine as clay sized particles, and the nutrients and metals that adhere to sediments. Also targeted are floating materials, including petroleum products.

Design Criteria

The design criteria for the *Vortechs System* should be obtained from the manufacturer. All designs should be reviewed by the manufacturer to insure that the system is correctly designed and sized.

Maintenance and Inspections

The *Vortechs System* has no ongoing maintenance requirements, although routine inspections are necessary to schedule cleaning. To insure proper performance and treatment efficiency, the system must be cleaned out when it is full. The rate at which the system accumulates contaminants is largely dependent upon site activities.

The first year of operation, Vortechnics recommends monthly inspections during periods of heavy contaminant loadings (e.g., winter sanding, soil disturbances, etc.). The inspection schedule can then be modified in subsequent years according to experience.

Clean-out of the *Vortechs System* with a vacuum truck is generally the best and most convenient method. Only the manhole cover above the grit chamber (the one farthest from the system outlet) needs to be opened to remove water and contaminants. As the grit chamber is pumped out, the oil and water drain back into it, so that oil scum, particulates and floatables are removed along with accumulated sediments. A pocket of water between the grit chamber and the flow control chamber seals the bottom of the oil barrier and prevents the loss of floatables to the outlet during cleaning.

Contact:

Tom Adams
Vortechnics
41 Evergreen Drive
Portland, ME 04103-1074
Phone: (207) 878-3662

FIGURE 3.15-3
Vortechs Stormwater Treatment System - Model # 9000

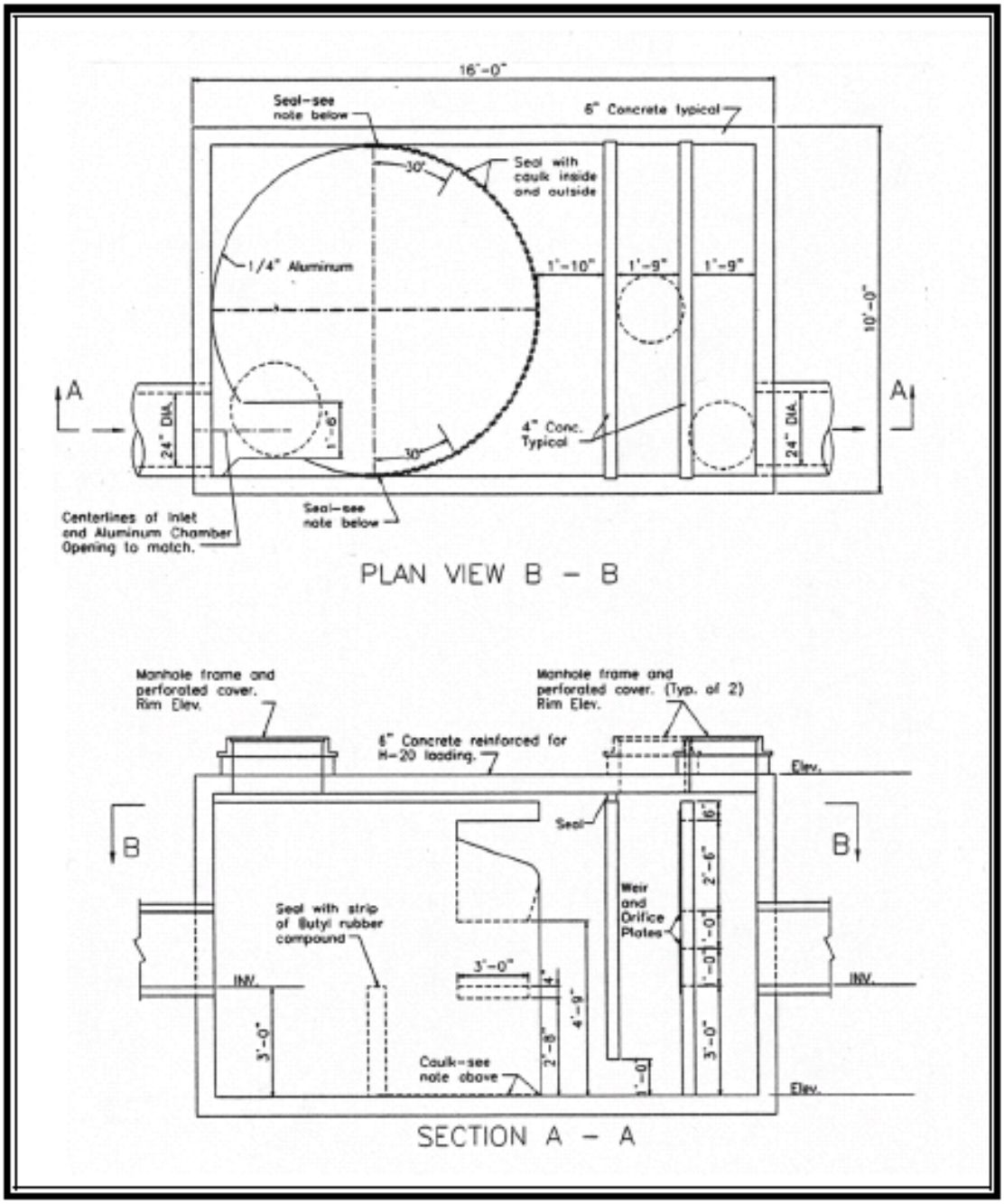

BMP Guidance #3-H

Downstream Defender

Description

The *Downstream Defender* consists of a concrete cylindrical structure with stainless steel internal components and a internal sloping base. Stormwater runoff enters the structure through a tangential inlet pipe which creates a swirling motion within the structure. The flow spirals down the perimeter of the structure, allowing heavier particles to settle out by gravity and drag forces exerted on the wall and base of the structure.

The base of the *Downstream Defender* is formed at a 30 degree angle. As the flow rotates about the vertical axis, solids are directed towards the base of the structure where they are stored in the collection facility. The steel internal components direct the main flow away from the perimeter and back up the middle of the vessel as a narrower spiraling column rotating at a slower velocity than the outer downward flow.

A dip plate is suspended from the underside of the component support frame. This dip plate serves two purposes: 1) it locates the shear zone, (the interface between the outer downward circulation and the inner upward circulation where a marked difference in velocity encourages solid separation), and 2) it establishes a zone between it and the outer wall where floatables, oil and grease are captured and retained after a storm. When the flow reaches the top of the structure, it is virtually free of solids and is discharged through the outlet pipe.

There are no moving parts and no external power requirements for the *Downstream Defender.*

Overflow - There is no overflow or bypass of larger storms. As the rate of runoff increases, the swirling motion keeps the sediments trapped in the collection facility, thus allowing the full range of storms to pass through the facility with minimum resuspension.
Hydraulics - The outlet flow from the *Downstream Defender* can be regulated with its associated valve, the *Reg-U-Flow Vortex Valve*. The valve can be adjusted to maximize the available storage in the upstream drainage system or upstream detention facility (if additional flow attenuation is required) by reducing the flow and backing the water up in the upstream system.

Planning Considerations

A drop structure upstream of the *Downstream Defender* may be required to ensure that the flow enters into the structure at the appropriate elevation. The *Downstream Defender* comes in various sizes and is designed for all types of land uses. Depending on existing pipe invert elevations it can be installed on an existing pipe system (as a retrofit) or in a new system where water quality enhancement is required.
Target Pollutants – The *Downstream Defender* is designed to capture sediments, and grit (TSS), as well as floatable materials, including petroleum products. In addition, pollutant which adsorb to the particulates can also be trapped.

Design Criteria

The design criteria for the *Downstream Defender* should be obtained from the manufacturer. All designs should be reviewed by the manufacture to insure that the system is correctly designed and sized.

Maintenance and Inspections

A simple sump-vac procedure is periodically required to remove floatables and solids from the *Downstream Defender* collection facility. Regular inspections should be carried out over the first 12 months of operation to determine the rate of sediment and floatables accumulation. A probe may be used after storm events to determine the sediment depth in the collection facility. This information can then be used to establish a maintenance schedule. H.I.L. Technology, Inc. recommends inspection and clean-out at least twice a year.

A standard septic tank hose is not appropriate for the clean-out procedure. A *Vacall* with a 6-inch, or larger, hydraulic hose is required. The *Vacall* is capable of loosening compacted solids by reversing the vacuum pump prior to the sump- vac procedure.

Floatables should be removed prior to emptying the collection facility. The floatables access port is located between the concrete vessel wall and the dip plate. The collection facility access port is located directly over the center shaft.

Contact:

H.I.L. Technologies, Inc.
94 Hutchins Drive
Portland, ME 04102
Phone: 1-800-848-2706

FIGURE 3.15-4
Downstream Defender - Section View

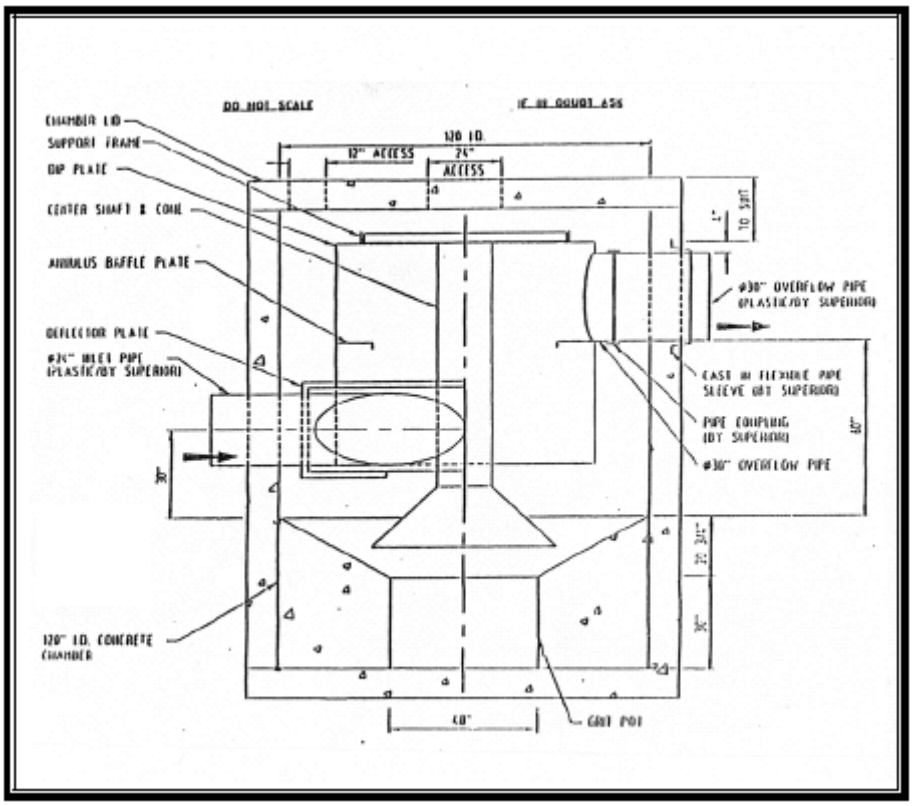

FIGURE 3.15-5
Downstream Defender - Plan View

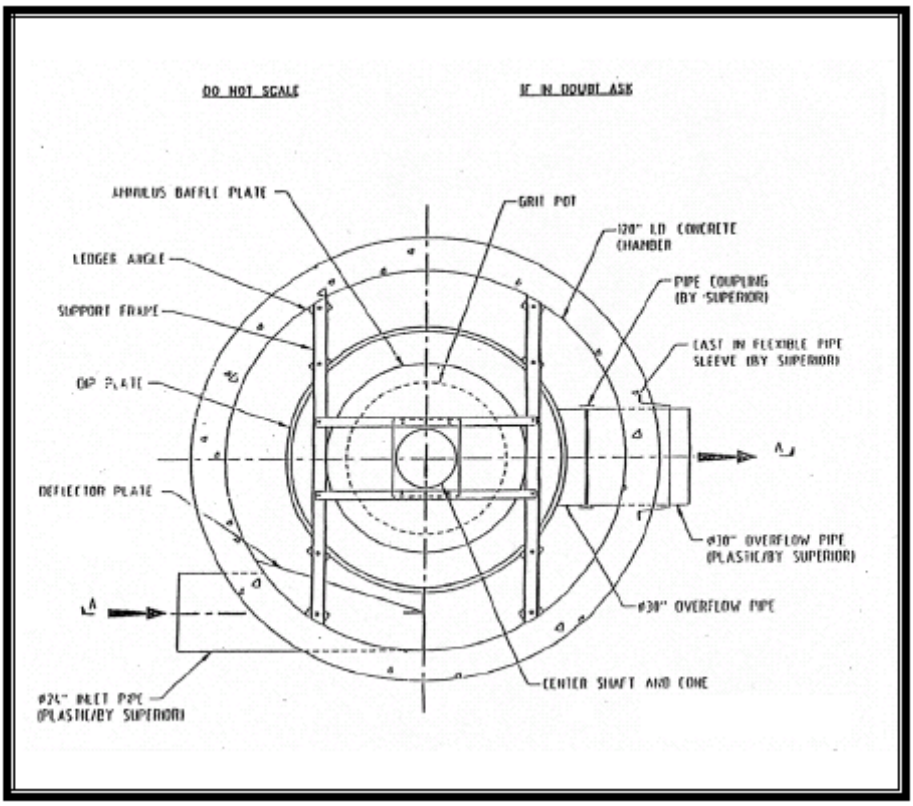

BMP Guidance #3-I

StormTreat System

Description

The *StormTreat System* captures and treats the first flush of runoff. An optional infiltration feature provides for the treatment of larger quantities of stormwater (beyond the first flush).

The system consists of a series of six sedimentation chambers and a constructed wetland which are contained within a modular 9.5-foot diameter tank. It is constructed of recycled polyethylene, which connects directly to existing drainage structures.

As stormwater enters the system, it is piped into sedimentation chambers where larger-diameter solids are removed. The internal sedimentation chambers contain a series of skimmers which selectively decant the upper portions of the stormwater in the sedimentation basins, leaving behind the more turbid lower waters. The skimmers significantly increase the separation of solids, as compared to conventional settling/detention basins. An inverted elbow trap serves to collect floatables, such as oils, within the inner tank. After moving through the internal chambers, the partially treated stormwater passes into the surrounding constructed wetland through a series of slotted PVC pipes.

The wetland is comprised of a gravel substrate planted with the bulrushes and other wetland plants. Unlike most wetlands constructed for stormwater treatment, the *StormTreat System* conveys stormwater into the subsurface of the wetland and through the root zone, where greater pollutant attenuation occurs through such processes as filtration, absorption, and biochemical reactions. Precipitation of metals and phosphorus occurs within the wetland substrate, while biochemical reactions, including microbial decomposition, provide treatment of the stormwater prior to discharge through the outlet valve. An outlet control valve provides a variable holding time within the system and can be closed to contain a hazardous waste spill.

There are no moving parts and no external power requirements for the *StormTreat System*.

Overflow - There is no internal, large storm bypass within the *StormTreat System*. An overflow of the treated water is provided and is conveyed to a receiving channel or pipe system, or as option, the overflow can be directed into he surrounding soils for infiltration (if the soils meet the criteria for infiltration facilities - **Minimum Standard 3.10**). This feature can be enhanced by backfilling the excavation around the StormTreat System with 3/4" stone, similar to an infiltration trench with the StormTreat system providing pretreatment. The flow into the *StormTreat System* is be regulated by the inflow pipe. A storage structure or basin may be used to temporarily hold the runoff until it can drain into the *StormTreat System.*

Hydraulics – The flow through the various filtering mediums is slow and, therefore, the backwater effects are high for this system. Flow through the system is gravity dependent

such that a 4-foot difference in elevation is needed from the pavement surface to the discharge point. This may prove difficult on relatively flat sites.

Planning Considerations

The *StormTreat System* can be configured in clusters of tanks to fit within limited areas and is designed for all types of land uses. The manufacturer recommends that a sump catch basin be placed prior to the StormTreat System in order to trap larger diameter sediments.

Target Pollutants – The *StormTreat System* is designed to capture sediment (TSS), fecal coliform bacteria, total petroleum hydrocarbons, total dissolved nitrogen, total phosphorus, lead, chromium, and zinc.

Design Criteria

The design criteria for the *StormTreat System* should be obtained from the manufacturer. All designs should be reviewed by the manufacturer to insure that the system is designed and sized correctly.

Maintenance and Inspections

The *StormTreat System* requires minimal maintenance. Annual inspection is recommended to insure the system is operating effectively. During inspection the manhole should be opened, the burlap grit screening bag covering the influent line should be removed and replaced, and filters should be removed, cleaned, and reinstalled. Sediment should be removed from the system via suction pump once every 3 to 5 years, depending on local soil characteristics and catch basin maintenance practices.

Contact:
Mr. Scott Horsley
StormTreat Systems Inc.
90 Route 6A
Sextant Hill, Unit 1
Sandwich, MA 02563
ph. (508) 833-1033

FIGURE 3.15-6
StormTreat System Tank

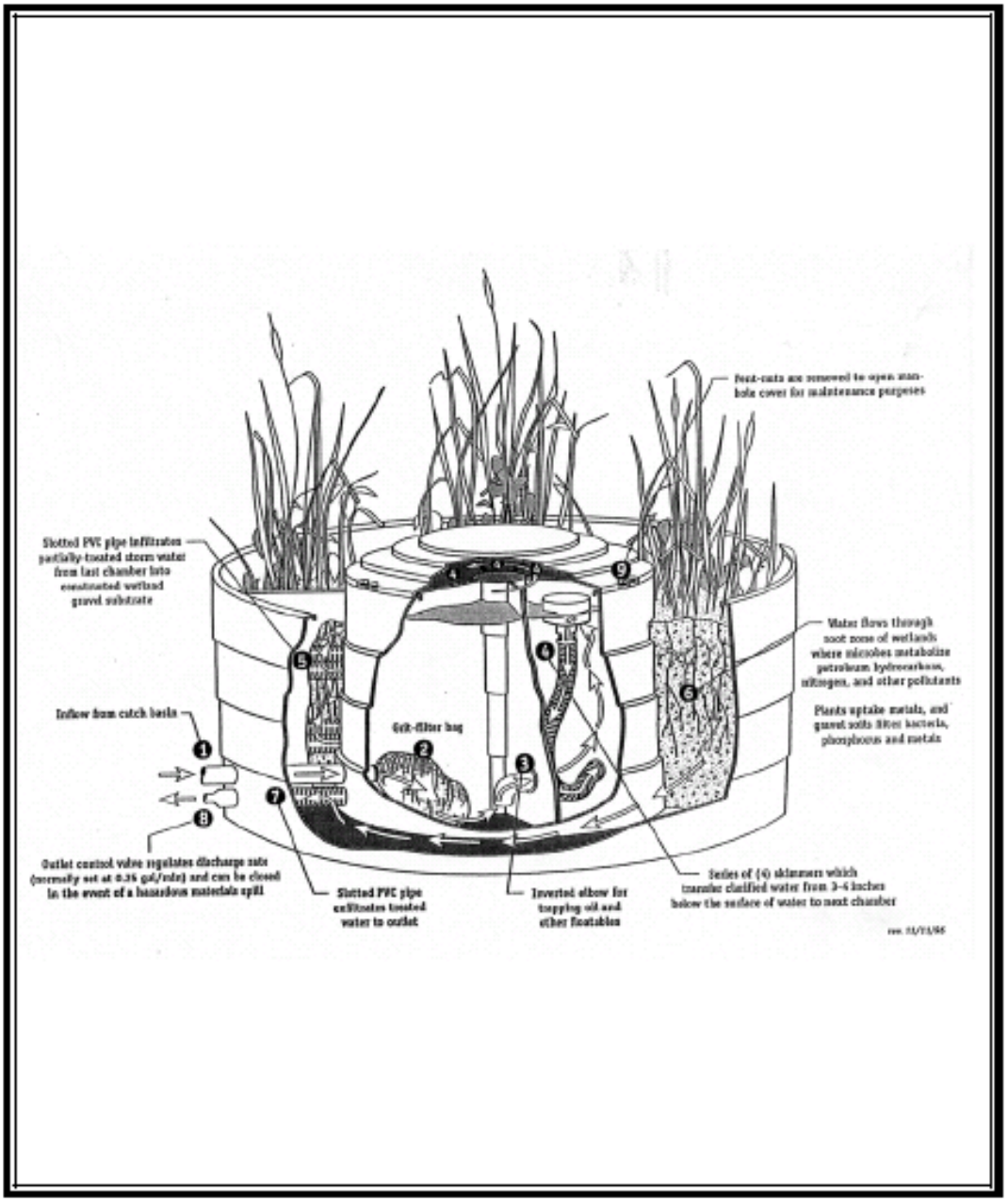

FIGURE 3.15-7
StormTreat System

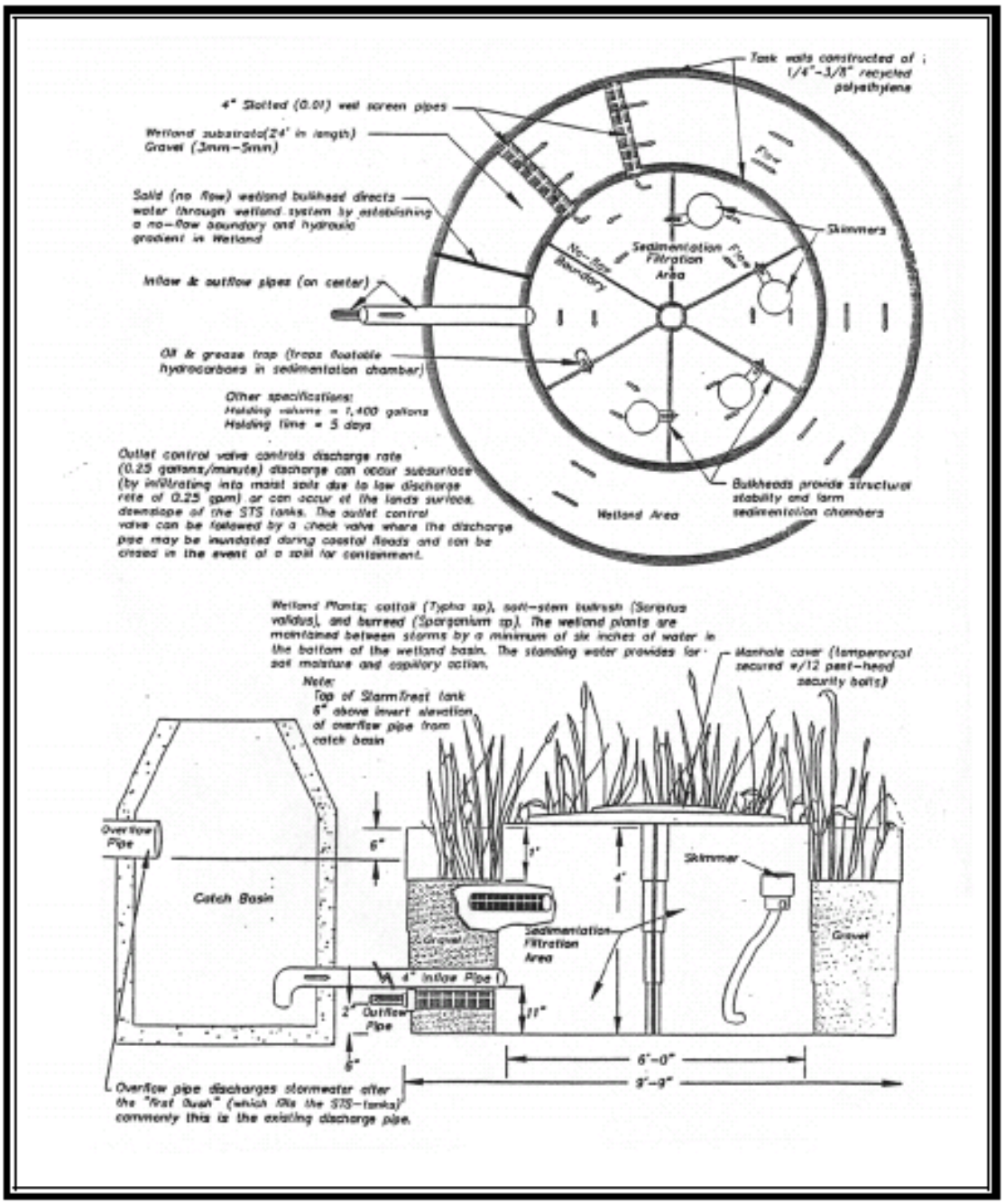

BMP Guidance #3-J

StormFilter System

Description

The *StormFilter* uses cylindrical rechargeable filter cartridges which hold a variety of filter media and can be customized by using different filter media to remove desired levels of sediments, phosphorus, nitrates, soluble metals, and oil & grease. Housed in standard size pre-cast or cast-inplace concrete vaults, the filter systems can be installed in-line, allowing stormwater to percolate through the cylindrical cartridges before discharging to an open channel drainage way. The *StormFilter* is equipped with scum baffles that trap floating debris and surface films, even during overflow conditions.

There are no external power requirements for the *CSF Stormwater Treatment System.* Moving parts are contained within the filter cartridges as part of the *priming system* discussed in the Hydraulics section.

Overflow – The *CSF system* is designed with an overflow that operates when the inflow rate exceeds the infiltration capacity of the filter media. The overflow consists of a weir wall inside the structure housing. Depending upon individual site characteristics, some filters are equipped with high- and/or low-flow bypasses. High-flow bypasses can be installed when the calculated peak storm event generates a flow which overcomes the overflow capacity of the filter.

Hydraulics – The hydraulics of the *StormFilter* are designed to maintain the design flow rate through the filter without pumps or other motorized devices. Each filter cartridge contains a float actuated device called a *priming system* within the central drainage tube. This system primes the cartridges, which then develop a siphon inside the drainage tube. The siphon increases as the filter cartridges become progressively clogged to help maintain the design flow.

Planning Considerations

The *StormFilter* is a structural BMP which can be easily installed in a parking lot or in fully developed areas as it does not require additional development space. However, consideration should be given to long term maintenance costs.

Target Pollutants – The *StormFilter* is designed to capture sediment (TSS), soluble metals, and oil and grease, nitrogen, and phosphorus. The various filter media can be selected to target pollutants of primary concern. The following filter media are available:

- Pleated fabric
- CSF leaf media
- Perlite
- Zeolite
- Granular activated carbon

According to the manufacturer, a combination of the pleated fabric and the zeolite media provides the best removal efficiencies for phosphorus and TSS.

Design Criteria

The design criteria for the *CSF Stormwater Treatment System* should be obtained from the manufacturer. All designs should be reviewed by the manufacturer to insure that the system is correctly designed and sized.

Maintenance and Inspections

Maintenance requirements of the *CSF Stormwater Treatment System* are controlled by the amount of plugging of the filters caused by sediment accumulation. The filters are progressively loaded with sediment contained in runoff. At least one scheduled inspection of the filter must be undertaken to perform minor maintenance activities, which includes flow valve adjustment. The major maintenance activity is performed to rejuvenate the media and clean the system. Major maintenance activities may also be required in the event of a chemical spill or excessive sediment loading (due to site erosion or extreme storms). It is also good practice to inspect the system after severe storm events.

When the cartridges become too occluded with sediments, maintenance involves the removal of the exhausted cartridges and replacement with freshly charged cartridges. The time period between when the cartridges are initially installed and when they must be replaced is dependent upon site specific conditions and sediment loading.

As with other filtration systems, sediments will accumulate on the filter surface, eventually slowing the infiltration capacity. To reduce sediment loading to the surface of filters, it is recommended that the filters be used in conjunction with sediment reducing practices such as parking lot sweeping and catch basin sand traps.

Contact:

Mr. James H. Lenhart, P.E.
Stormwater Management
2035 Colombia Boulevard, NE
Portland, Oregon 97211
ph. (800) 548-4667

FIGURE 3.15-8
StormFilter

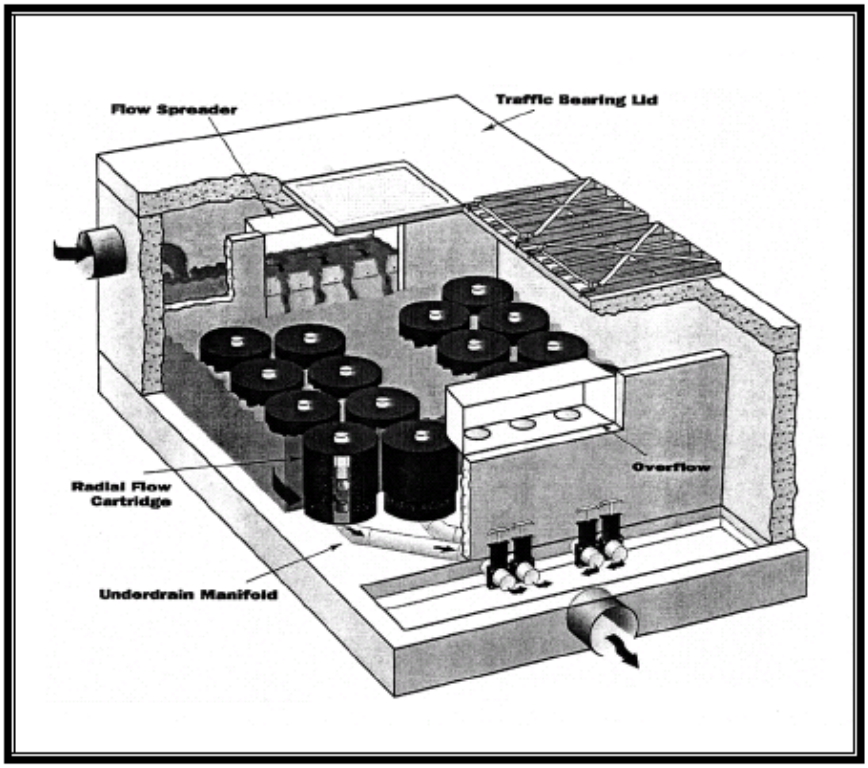

FIGURE 3.15-9
StormFilter Drop-In Filter

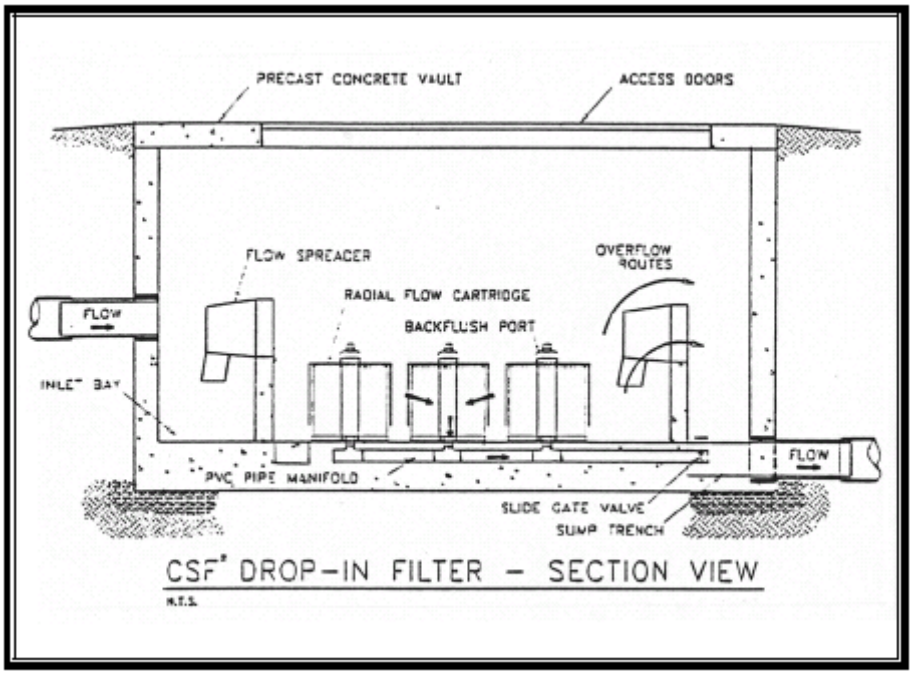

BMP Guidance #3-K

Baysaver

Description

The Bay Saver system is comprised of three main components: the Primary Separation Manhole, the Secondary Storage Manhole, and the BaySaver Separator Unit. The primary and secondary manholes are both standard pre-cast concrete drop structures. The BaySaver Separator Unit is constructed of high-density polyethylene (HDPE).

Stormwater runoff enters the BaySaver system through the primary separation manhole. As the water flows into the manhole, the larger sediments settle to the bottom of the tank. **Figure 3.15-10** shows a profile of the primary manhole. The structure has a minimum water level at the elevation of the BaySaver's surface skimming weir. This weir is a trapezoidal shaped weir with a bottom width ranging from 3" to 6", and a flow depth of 9" to 18", depending on the size unit as required by the contributing drainage area. As water flows into the manhole, the surface water flows over the weir and is diverted to the storage manhole. This water carries with it floating pollutants (oils, for example), debris, and fine sediment particles.

The BaySaver Separator Unit incorporates three flow paths that water can take through the system. The trapezoidal surface-skimming weir diverts first flush and low flows into the second manhole for the most efficient treatment. As the water level rises in the primary separation manhole, more water flows over the weir. The majority of oils and fine sediments are removed by this flow path.

During a more intense storm, the BaySaver unit will also allow water to flow through the inverted 90 elbow pipes. The elbow pipes draw water from the middle of the primary separation manhole, with the intakes approximately four feet below the surface, and discharge directly to the system outfall. The water pulled by the elbows is free of floating contaminants and has had time for suspended sediments to settle out. By discharging this water, the BaySaver can continue full treatment of the surface flow in the second manhole.

If the flow becomes too great for the system to effectively treat, the BaySaver bypasses the treatment stages, conveying water directly from inlet to outlet. Elongated openings in the crown of the elbow pipes serve as pressure equalizers, significantly reducing flow through the submerged inlets of the elbow pipes during bypass. This reduction minimizes the re-suspension and discharge of trapped contaminants from the primary manhole. Bypass flows also prevent water from flushing through the storage manhole, providing more protection against the risk of re-suspension of fines and oils.

There are no moving parts and no external power requirements for the BaySaver.

Overflow - Large storm bypass is accomplished first by the two 90 inverted elbow pipes, and second by overflowing the top plate over the weir (set approximately at ½ the diameter of the separator unit).

Hydraulics - The separator unit and associated overflow pipes are sized according to the drainage area being served. The system should operate without creating a back water condition in the upstream drainage system.

Planning Considerations

The BaySaver primary and secondary manholes are precast and come in three sizes depending on drainage area size. The system can be installed on an existing system (as a retro fit) or on a new system where water quality enhancement is required.

Target Pollutants - The BaySaver system is designed to capture sediment, total suspendedsolids (TSS) trash, organic material, and floatable oil and grease. In addition, many other urban pollutants which absorb to sediments and particles can also be trapped by the structure.

Design Criteria

The design criteria for the BaySaver should be obtained from the manufacturer. All designs should be reviewed by the manufacturer to insure that the system is appropriately designed and sized.

Maintenance and Construction

It is generally recommended that the system be maintained (full pump-out) once per year. This frequency may have to be adjusted to a shorter interval once loading rates are determined. Regular inspections will help determine the required frequency of cleaning. More frequent inspections are appropriate where oil spills occur regularly or a large volume of trash and debris are expected.

Contact:

BaySaver, Inc.
1010 Deer Hollow Drive
Mount Airy, Maryland 21771
Phone: (301) 829-6119

FIGURE 3.15-10
BaySaver Primary Separation Manhole

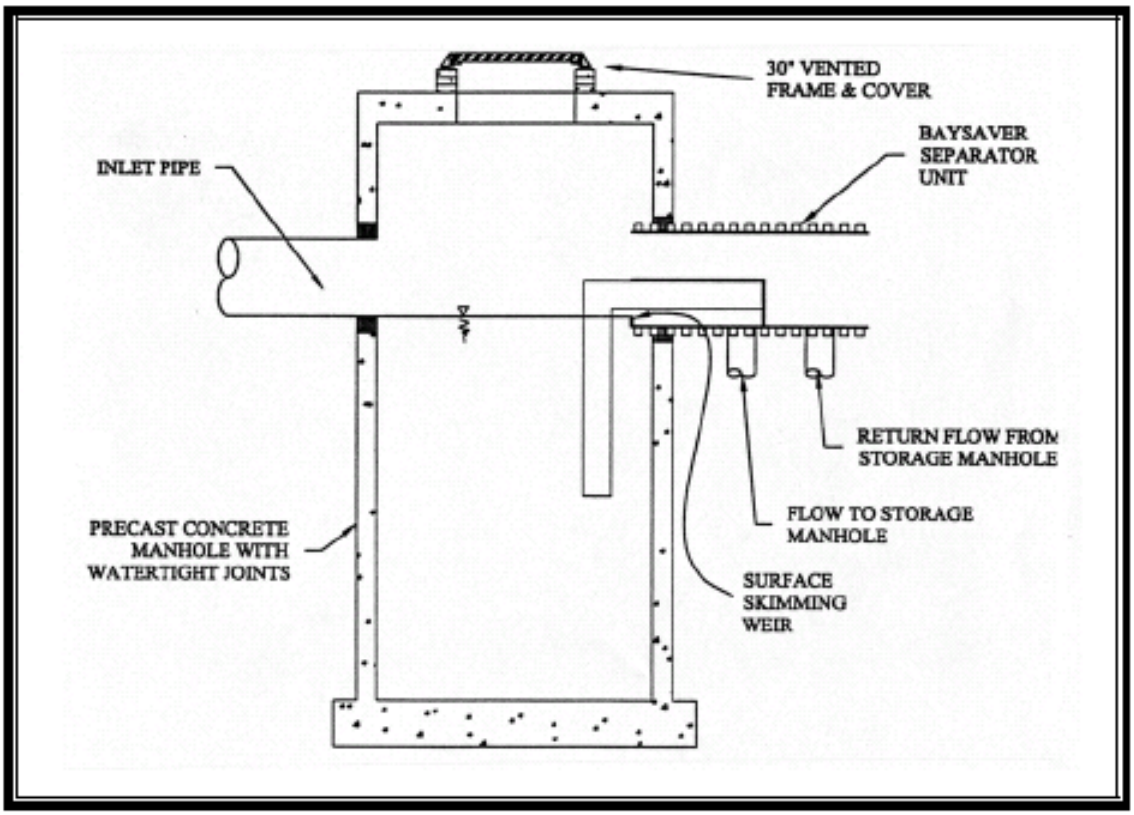

FIGURE 3.15-11
BaySaver Plan View

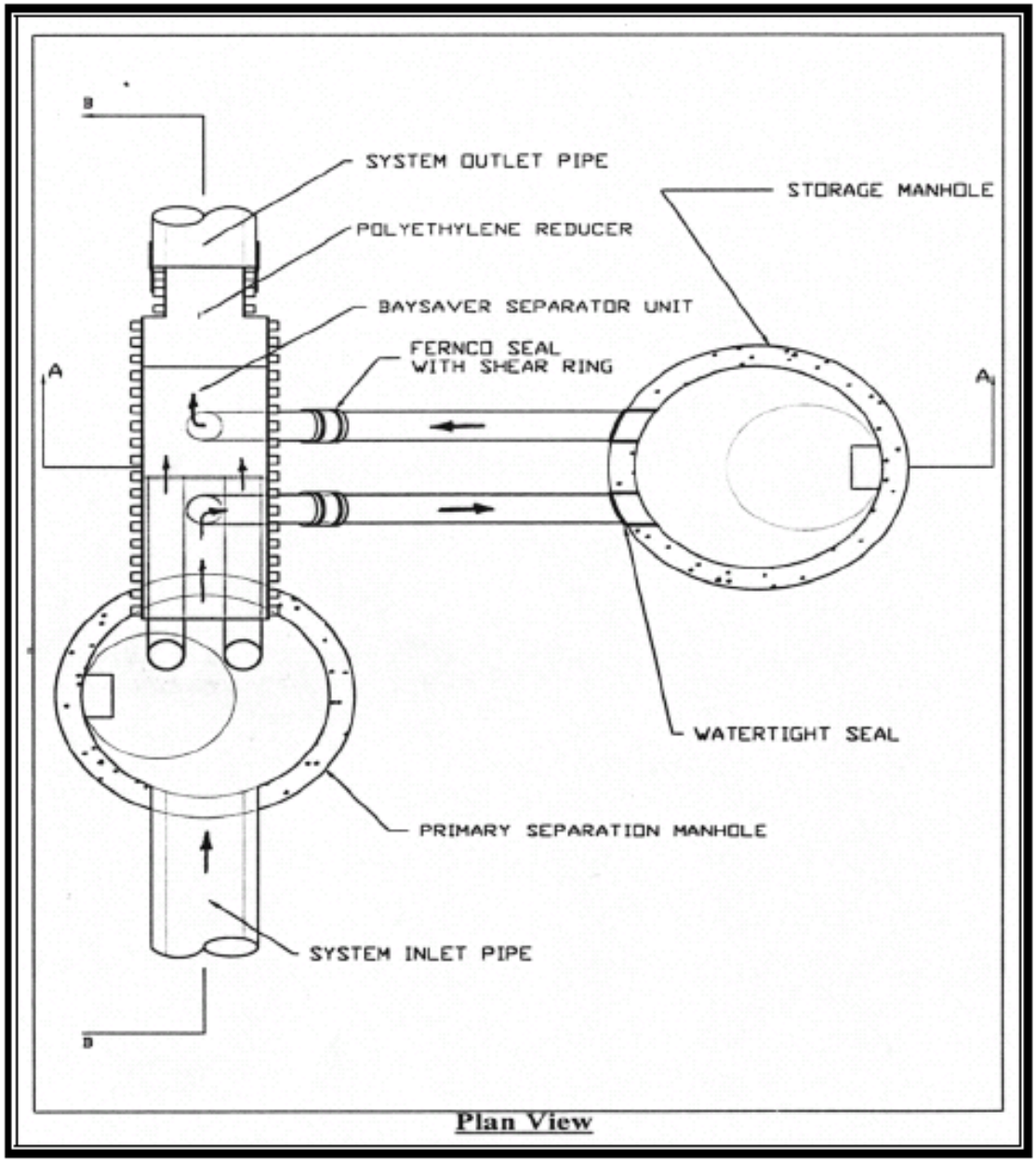

FIGURE 3.15-12
BaySaver Section A-A

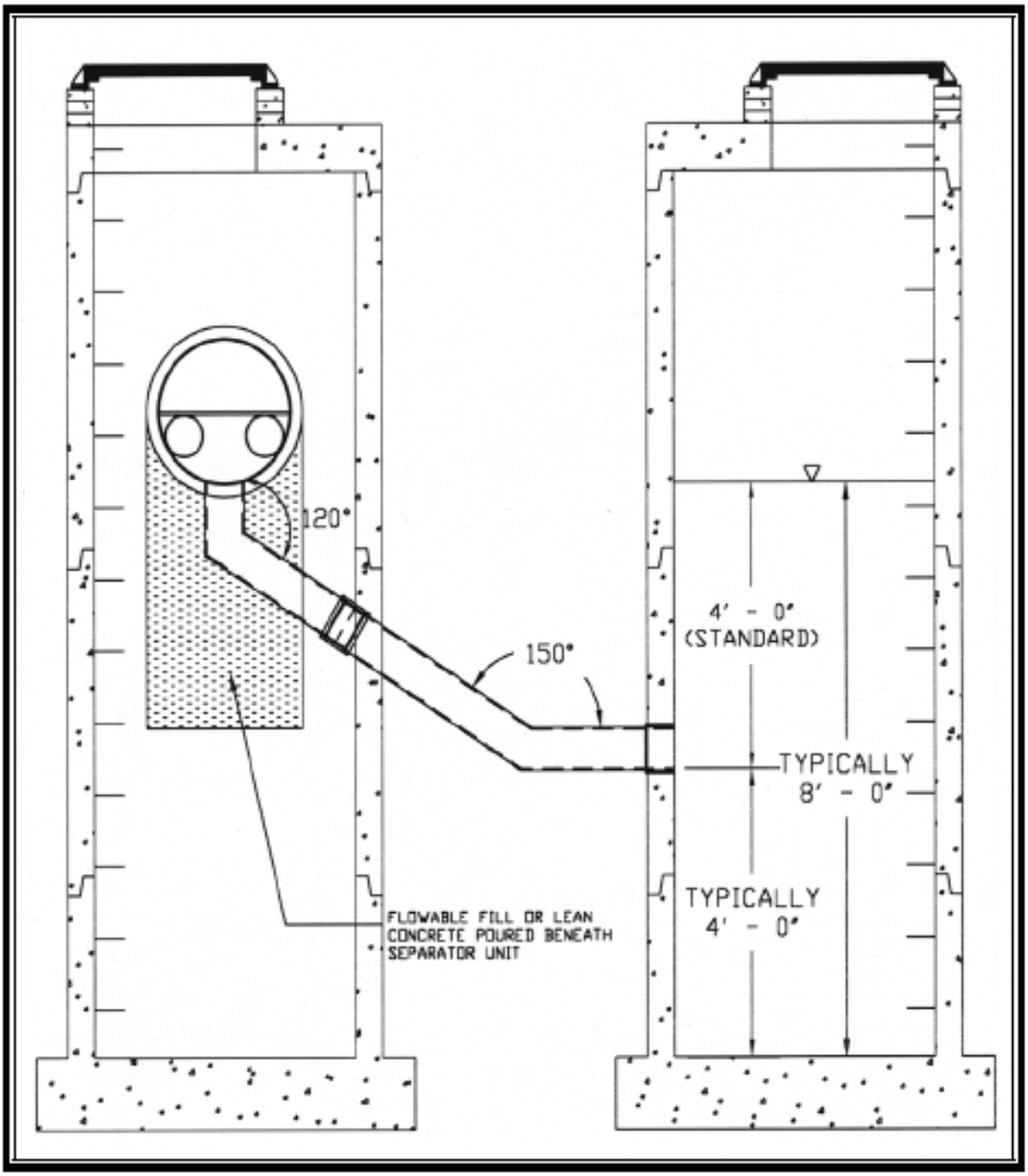

FIGURE 3.15-13
BaySaver 1K Separator Unit

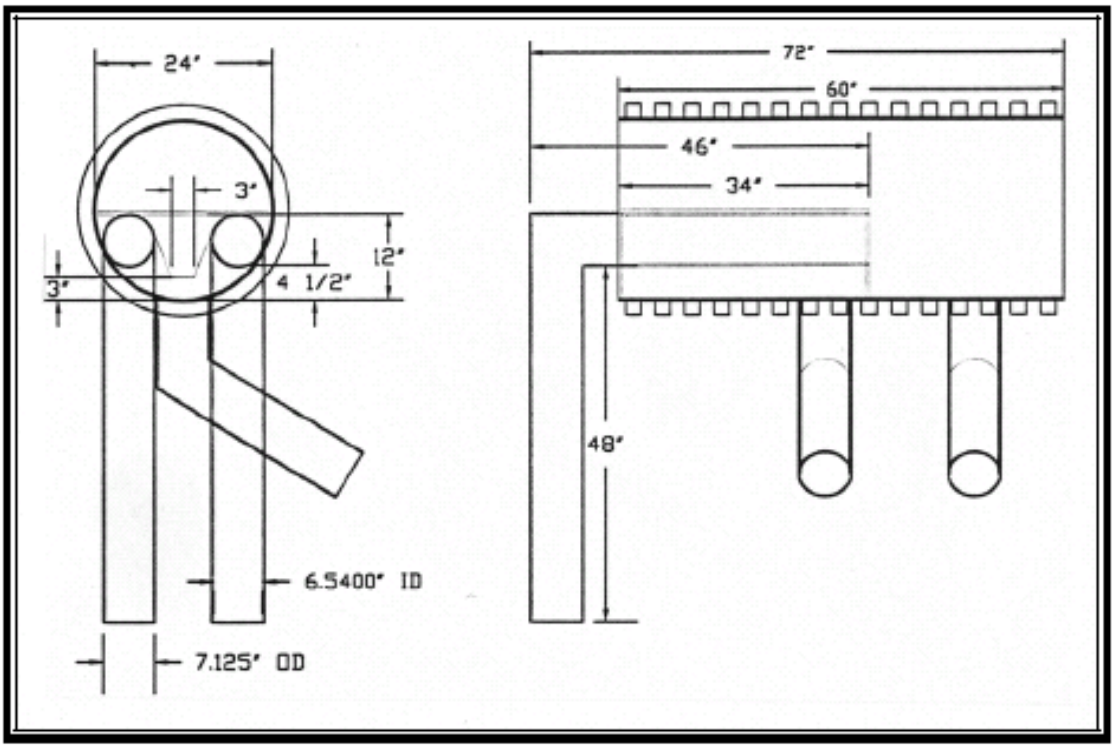

BMP Guideline # 3-L
Up-Flo™ Filter

Disclaimer:
The Hydro-International Up-Flo™ Filter has received the Technology Acceptance and Reciprocity Partnership (TARP) Tier 1 verification. This product is now approved for use within the City of Lynchburg with the condition that this product completes field testing that meets the full requirements of the TARP Stormwater BMP Tier II Protocol for Interstate Reciprocity for stormwater treatment technology and is accepted by the Department of Conservation and Recreation BMP Clearinghouse Committee. If this product fails to meet these requirements, approval of this measure will be rescinded.

Description

The *Up-Flo™ Filter* is an upward flow stormwater filtration system that includes pretreatment prior to filtration in one device. This filter system will fit into a standard four foot manhole configuration. This system can allow the use of one to six Filter Modules the meet removal requirements. Each module has filter media packs that filter stormwater runoff.

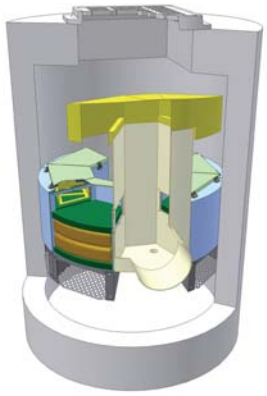

During a storm even the runoff enters the chamber via an inlet pipe or grate. Floatables and sediment are allowed to settle out in the sump. The flow is directed up through angled screens into the Filter Module. Once treated the runoff then exits the Filter Module through the Conveyance Channel to the Outlet Module.

The *Up-Flo™ Filter* employs a drain down system to ensure that the filter media is not submerged between storms. The filtered runoff will drain out of the chamber and filter media through the Drain Down Port at the base of the module. The reverse flows will also cause debris to fall away from the angled screens and become captured in the sump.

Overflow

Flows in excess of the designed filtration capacity are discharged directly to the outlet using a Siphonic Bypass. The Siphonic Bypass also acts as a floatables baffle preventing the escape of buoyant debris and trash.

Planning Considerations

The *Up-Flo™ Filter* is a manufactured BMP which can be installed within a standard manhole in a parking lot or developed area without requiring a large footprint. Consideration should be given to the long term maintenance costs of using this measure.

Target Pollutants – The *Up-Flo™ Filter* is designed to capture total suspended solids (TSS), nutrients, floatable trash and other pollutants.

Design Criteria

The *Up-FLo™ Filter* shall be equipped with Hydro-Filter-Sand™, media, have a three foot sump, a hydraulic loading rate of 20 gpm per Filter Module and an operating head of 20 inches above the filter (31 inches above the outlet invert elevation).

Design specifications for the *Up-Flo™ Filter* should be obtained from the manufacturer. All designs should be reviewed by the manufacturer to insure that the system is designed and sized correctly. Documentation of this review shall be submitted to the Plan Approving Authority.

Refer to Table 1 (Technical Bulletin: Sizing for Phosphorous Reduction in Virginia) to determine the number of modules required to meet the pollutant removal efficiency required for the project.

Provide the calculation for determining the number of Filter Modules within the stormwater calculations submitted to the City of Lynchburg.

Construction Specifications

During installation, non-shrink grout shall be used to provide a water tight seal in the lifting holes and around the concrete knock-outs for the inlet and outlet pipes. The concrete structure shall be tested for water tightness before backfilling. All other manufacturer requirements shall be met for installation of the BMP.

Maintenance and Inspections

The frequency of maintenance procedures can be determined in the field after installation. During the first year of operation, the unit should be inspected every six months to determine the rate of sediment and floatables accumulation. Sediment must be removed before it completely fills the sump to prevent the entryway to the filter media from being blocked. Typically, annual maintenance is recommended once per year. Refer to **Figure 1** for recommended maintenance schedule.

Routine maintenance includes inspection of the unit, removal of floatables and/or sediment; however, does not require entry into the *Up-Flo*™ chamber. A vactor truck is required if maintenance includes sediment removal from the sump of the *Up-Flo*™ *Filter*. Annual maintenance includes Media Pack replacement in addition to sediment and floatables removal. In most instances, entry into the Up-Flo™ vessel is required for Media Pack replacement. OSHA Confined Space Entry procedures must be followed when performing media replacement. Utilize the Inspection and Maintenance Log Form for documenting inspections and reporting annually to the City of Lynchburg.

Figure 1

Type of Maintenance	Activity	Frequency
Routine	Inspection	- Regularly during first year of installation - Every 6 months after the first year of installation
	Floatables Removal	- Twice per year or as needed - Following a spill in the drainage area
	Sediment Removal	- Twice per year or as needed - Following a spill in the drainage area
Annual	Media Pack Replacement	- Once per year or as needed - Following a spill in the drainage area

Contact:
Hydro-International
94 Hutchins Drive
Portland, ME 04102
Telephone: (207) 756-6200 or 1-800-848-6212
Fax: (207-756-6212
Email: hiltech@hil-tech.com
www.hydro-international.biz

Sizing for Phosphorus Reduction in Virginia

The Up-Flo Filter is a modular filtration system typically supplied in "rings" of up to 6 Filter Modules per ring (Fig1) or 4-ft manhole (Fig 2). Each filter module has a treatment capacity of approximately 25 GPM, for a total treatment flow rate of up to 150 GPM (0.33cfs) per ring, depending on the filtration media type. This Technical Bulletin provides a look-up table to assist in the sizing of the Up-Flo Filter for Phosphorus reduction in the State of Virginia (see *Table 1*, next page).

The Up-Flo Filter can be sized to capture a percentage of the total annual runoff volume from a project's drainage area. Local rainfall data is available for a selection of rainfall stations throughout North America. The data can be analyzed to determine the frequency of different rainfall intensities and corresponding runoff. Depending on the rainfall intensity and corresponding runoff, a portion or all of the runoff will be filtered. Increasing or decreasing the number of Filter Modules for a given drainage area adjusts the volume of runoff filtered and the associated pollutant reductions.

Four rainfall data sets were analyzed for different locations throughout Virginia; Reagan National Airport, Norfolk, Richmond and Lynchburg. *Chart 1* shows the Phosphorus reductions per Filter Module for different areas based on the annual runoff volume treated for the four locations. In general, as the drainage area per module increases, the annual runoff volume increases, therein decreasing the volume of runoff filtered and Phosphorus reduction.

Figure 1

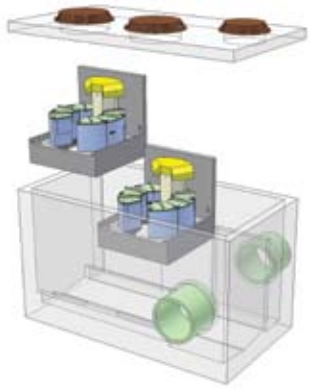

Up-Flo Filter Vault

Figure 2

Up-Flo Filter Manhole

Chart 1 - *Up-Flo Filter Performance*

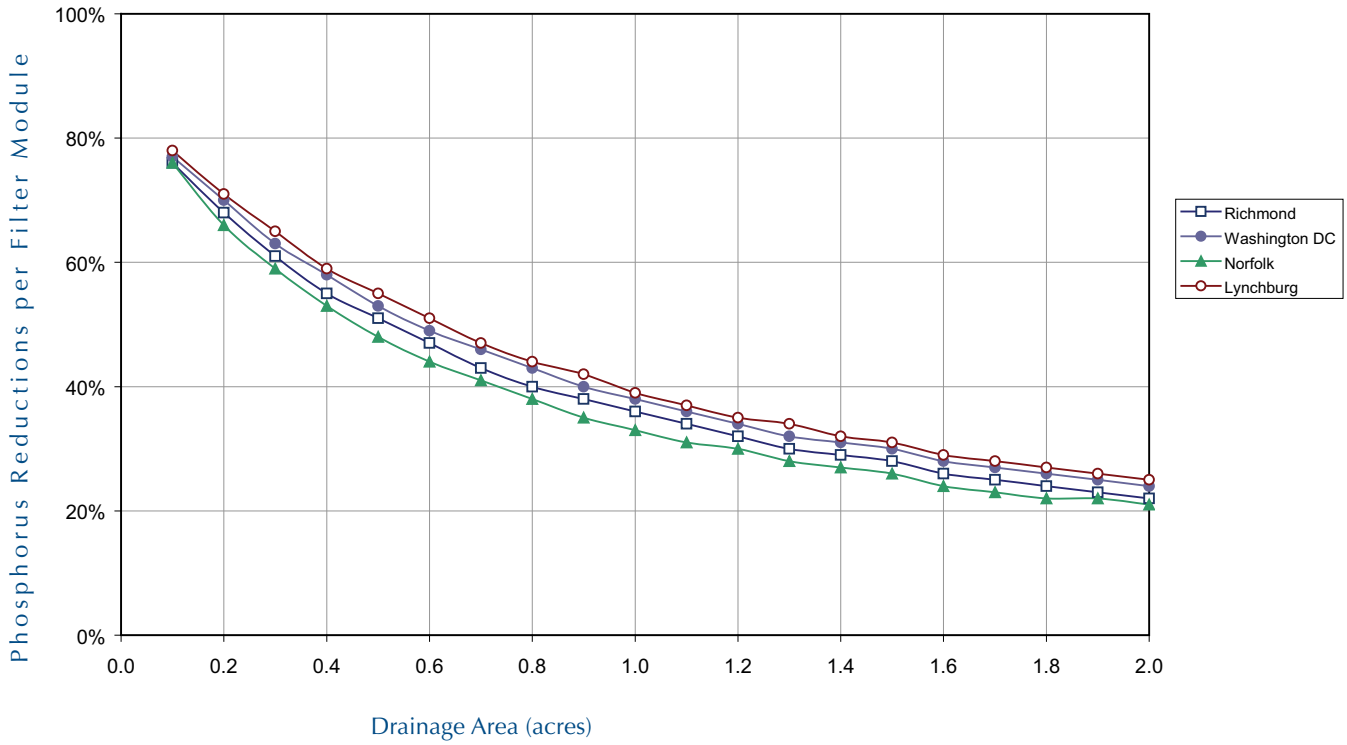

To simplify sizing the **Up-Flo Filter** for a given drainage area, *Table 1* below can be used to determine how many Filter Modules are needed to filter a given drainage area and meet the required Phosphorus reductions in the State of Virginia.

For example, given the following parameters, determine the number of filter modules.

Example 1:
Area = 1.0 acres in Washington, D.C.
Required Phosphorus reduction = 70%
Refer to the Phosphorus Reductions per Up-Flo Filter Module in Washington, D.C. 70% Phosphorus reduction is possible for one Filter Module treating 0.2 acres.
# of Filter Modules = 1 module/0.2 acres × 1.0 acres = 5 modules

---

Example 2:
Area = 1.37 acres located in Virginia
Required Phosphorus reduction = 40%
Refer to the VA Average Phosphorus Reductions column for a site located outside of the specified cities.
The Average Phosphorus Reduction column shows that 39% Phosphorus removal is possible for one Filter Module treating 0.9 acres.
# of Filter Modules = 1 module/0.9 acres × 1.37 acres = 1.52 modules
Rounding up, 2 Filter Modules are required to meet the 40% Phosphorus reduction for 1.37 acres.

Table 1 - Phosphorus reduction per Up-Flo Filter Module for a given runoff area

Runoff Area		Phosphorus Reductions per Up-Flo Filter Module				VA Average P Reductions
Acres	Square Feet	Richmond	Washington DC	Norfolk	Lynchburg	
0.1	4356	76%	77%	76%	78%	77%
0.2	8712	68%	70%	66%	71%	69%
0.3	13068	61%	63%	59%	65%	62%
0.4	17424	55%	58%	53%	59%	56%
0.5	21780	51%	53%	48%	55%	52%
0.6	26136	47%	49%	44%	51%	48%
0.7	30492	43%	46%	41%	47%	44%
0.8	34848	40%	43%	38%	44%	41%
0.9	39204	38%	40%	35%	42%	39%
1	43560	36%	38%	33%	39%	37%
1.1	47916	34%	36%	31%	37%	35%
1.2	52272	32%	34%	30%	35%	33%
1.3	56628	30%	32%	28%	34%	31%
1.4	60984	29%	31%	27%	32%	30%
1.5	65340	28%	30%	26%	31%	29%
1.6	69696	26%	28%	24%	29%	27%
1.7	74052	25%	27%	23%	28%	26%
1.8	78408	24%	26%	22%	27%	25%
1.9	82764	23%	25%	22%	26%	24%
2	87120	22%	24%	21%	25%	23%

TB-SW-UFFSizingVA-5/25/07

Certificate No. 961366

SCHEMATIC ONLY - NOT FOR CONSTRUCTION

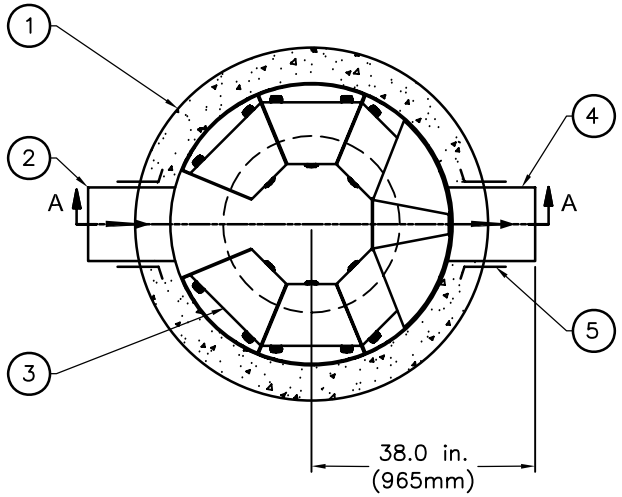

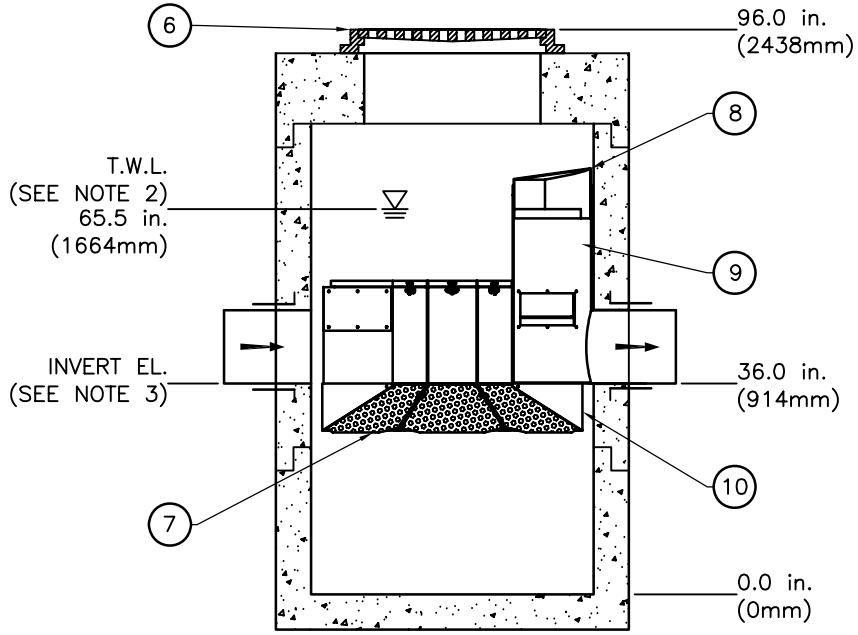

SECTION A-A

NOTES

1) Dimensions are general and intended for guidance only.

2) The upstream water level can be reduced depending on the design criteria. Please contact Hydro International for technical assistance.

3) The orientation and elevation of the inlet pipe can be adjusted to site requirements. See site plan for orientation.

EQUIPMENT PERFORMANCE

The stormwater filtration system shall adhere to the parameters listed below:

Minimum Performance Criteria: 80% removal of Sil–Co–Sil 106 at the peak treatment flow.

Peak Treatment Flow: 150 gpm (9.46 l/s)

Bypass Capacity: 3141 gpm (198.17 l/s)

Minimum Sump Storage Capacity: 29.3 cu. ft. (0.83 cu. m.)

Minimum Floatables Storage Capacity: 39.3 cu. ft. (1.11 cu. m.)

PARTS LIST

ITEM	SIZE		DESCRIPTION
1	48.0 in.	1219mm	I.D. CONCRETE MANHOLE
2	12.0 in.	305mm	INLET PIPE (OPTIONAL)
3			FILTER MODULE (TYP.)
4	12.0 in.	305mm	OUTLET PIPE
5			PIPE BOOT (TYP.)
6	30.0 in.	610mm	ROUND GRATE (TYP.)
7			ANGLED SCREEN (0.25 in. APERTURES)
8			SIPHONIC BYPASS/FLOATABLES BAFFLE
9			OUTLET MODULE
10			SUPPORT BRACKET (TYP.)

Rev	By	Date	Description
	EPL	03/24/06	FIRST ISSUE

Date 03/24/06	Scale NTS
Drawn by EPL	Checked Eng.
Checked Prod.	Approved by

Title
4–FT. DIAMETER
UP–FLO FILTER

6 MODULES

GENERAL ARRANGEMENT

Hydro International

94 Hutchins Drive
Portland, Maine 04102
tel: (207) 756-6200
fax: (207) 756-6212
email: hiltech@hil-tech.com

©2006
Hydro International

Any warranty made by Hydro International only applies to those items supplied by it. Hydro International does not accept and expressly disclaims any responsibility or liability for any structure, plant or equipment (or the performance thereof) designed, built, manufactured or supplied by any third–party. Hydro International has a policy of continuous product development and reserves the right to amend the specifications of any of its products or equipment at any time. Hydro International expressly disclaims any liability for the performance of its equipment (or any part thereof) used or made subject to conditions outside of the conditions set forth in Hydro International's design specifications. Hydro International owns the copyright in and to this drawing, which is supplied in confidence, and all intended recipients of the drawing, by their use thereof, agree to hold the drawing in confidence and not to use it for any purpose other than for which it was supplied and not reproduce, in whole or in part, the drawing or any of the equipment or structures depicted therein, without prior written permission of Hydro International.

CAD Ref: GA1
Project No.
Drawing No. GA1 Rev.

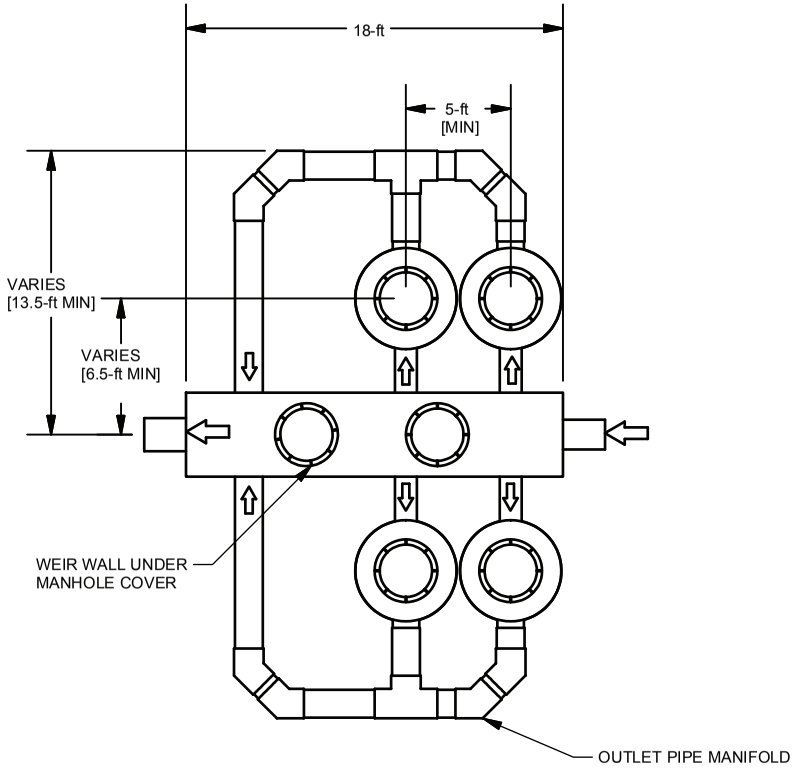

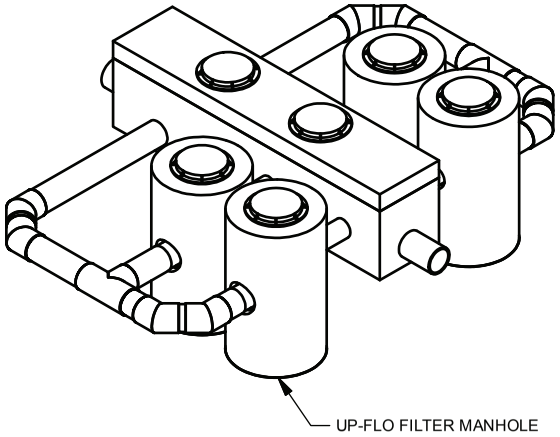

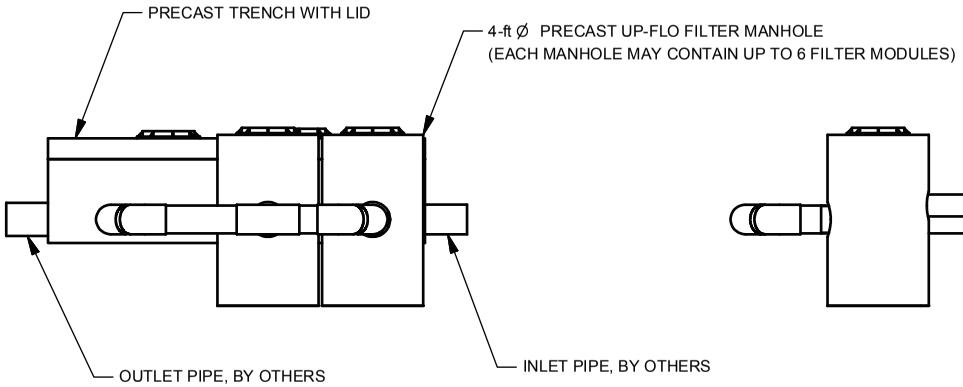

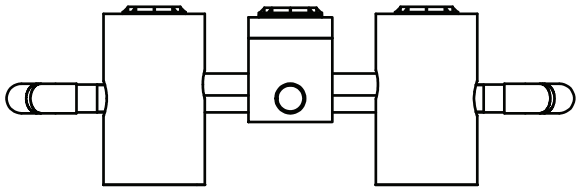

Notes

REVISION HISTORY			
REV	BY	DATE	DESCRIPTION
1		5/30/08	FIRST ISSUE

Date	Scale
5/30/2008	NTS

Drawn	Checked	Approved
DRC		

Title

UP-FLO FILTER GALLERY ™

GENERAL ARRANGEMENT

Hydro International ™

94 Hutchins Drive
Portland, Maine 04102
Tel: (207) 756-6200
Fax: (207) 756-6212
Email: hiltech@hil-tech.com

© 2006
Hydro International

Any warranty made by Hydro International only applies to those items supplied by it. Hydro International does not accept and expressly disclaims any responsibility or liability for any structure, plant or equipment (or the performance thereof) designed, built, manufactured or supplied by any third-party. Hydro International has a policy of continuous product development and reserves the right to amend the specifications of any of its products or equipment at any time. Hydro International expressly disclaims any liability for the performance of its equipment (or any part thereof) used or made subject to conditions outside of the conditions set forth in Hydro International's design specifications. Hydro International owns the copyright in and to this drawing, which is supplied in confidence, and all intended recipients of the drawing, by their use thereof, agree to hold the drawing in confidence and not to use it for any purpose other than for which it was supplied and not reproduce, in whole or in part, the drawing or any of the equipment or structures depicted therein, without prior written permission of Hydro International.

CAD Ref: UFFG-GA2-4MH

Project No.

Drawing No. GA2-4MH Rev.

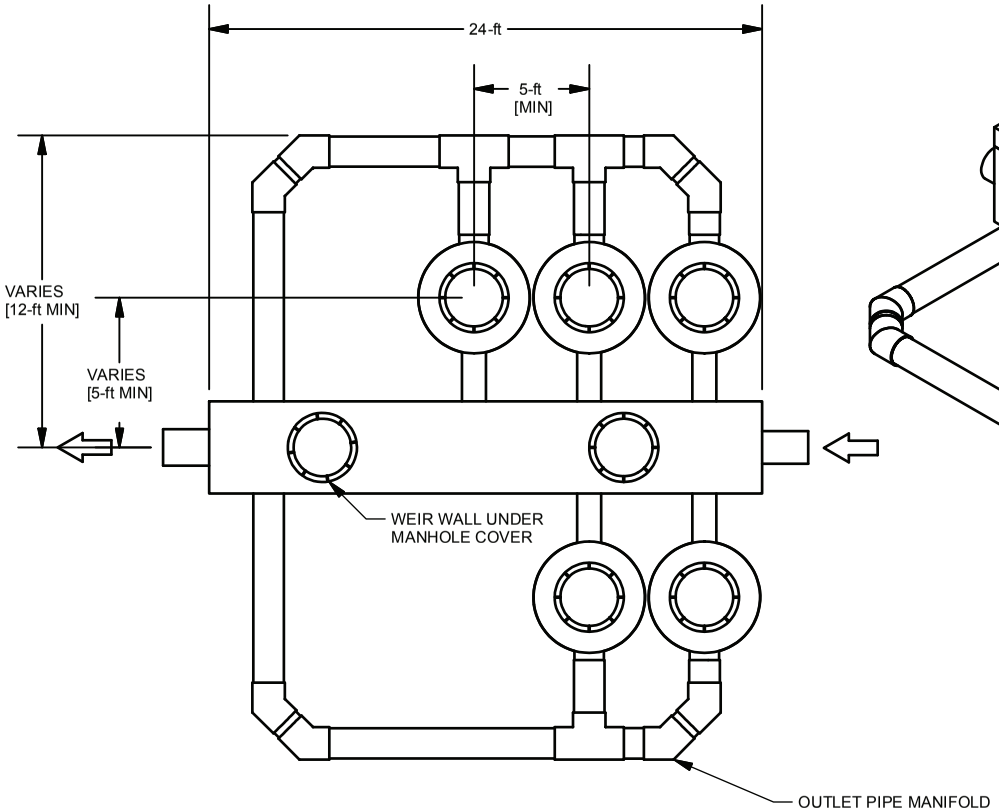

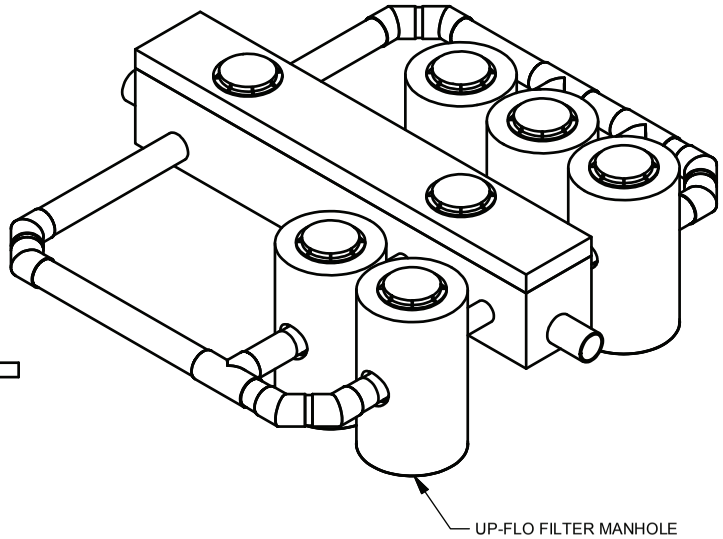

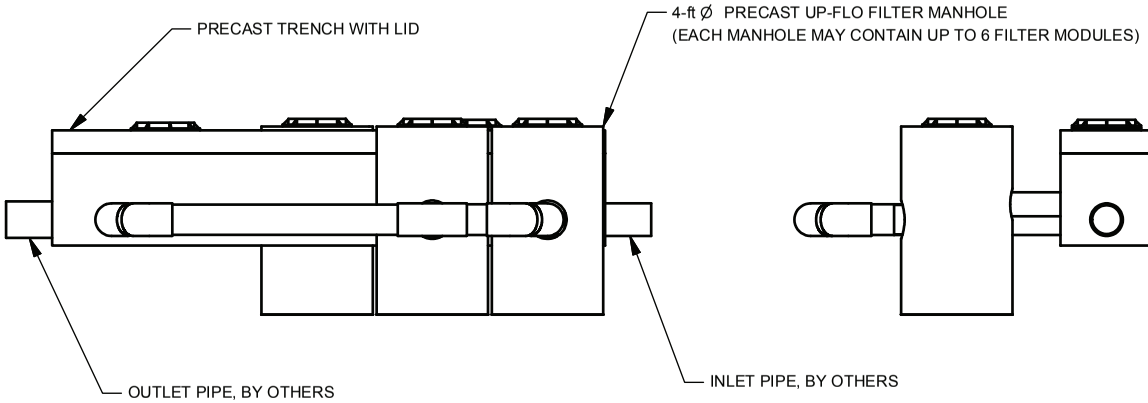

Notes

REVISION HISTORY			
REV	BY	DATE	DESCRIPTION
1		5/12/08	FIRST ISSUE

Date	Scale
5/12/2008	1:100

Drawn	Checked	Approved
DRC		

Title

UP-FLO FILTER GALLERY ™

GENERAL ARRANGEMENT

Hydro International ™

94 Hutchins Drive
Portland, Maine 04102
Tel: (207) 756-6200
Fax: (207) 756-6212
Email: hiltech@hil-tech.com

© 2006
Hydro International

Any warranty made by Hydro International only applies to those items supplied by it. Hydro International does not accept and expressly disclaims any responsibility or liability for any structure, plant or equipment (or the performance thereof) designed, built, manufactured or supplied by any third-party. Hydro International has a policy of continuous product development and reserves the right to amend the specifications of any of its products or equipment at any time. Hydro International expressly disclaims any liability for the performance of its equipment (or any part thereof) used or made subject to conditions outside of the conditions set forth in Hydro International's design specifications. Hydro International owns the copyright in and to this drawing, which is supplied in confidence, and all intended recipients of the drawing, by their use thereof, agree to hold the drawing in confidence and not to use it for any purpose other than for which it was supplied and not reproduce, in whole or in part, the drawing or any of the equipment or structures depicted therein, without prior written permission of Hydro International.

CAD Ref: UFFG-GA2-5MH

Project No.

Drawing No. GA2-5MH Rev.

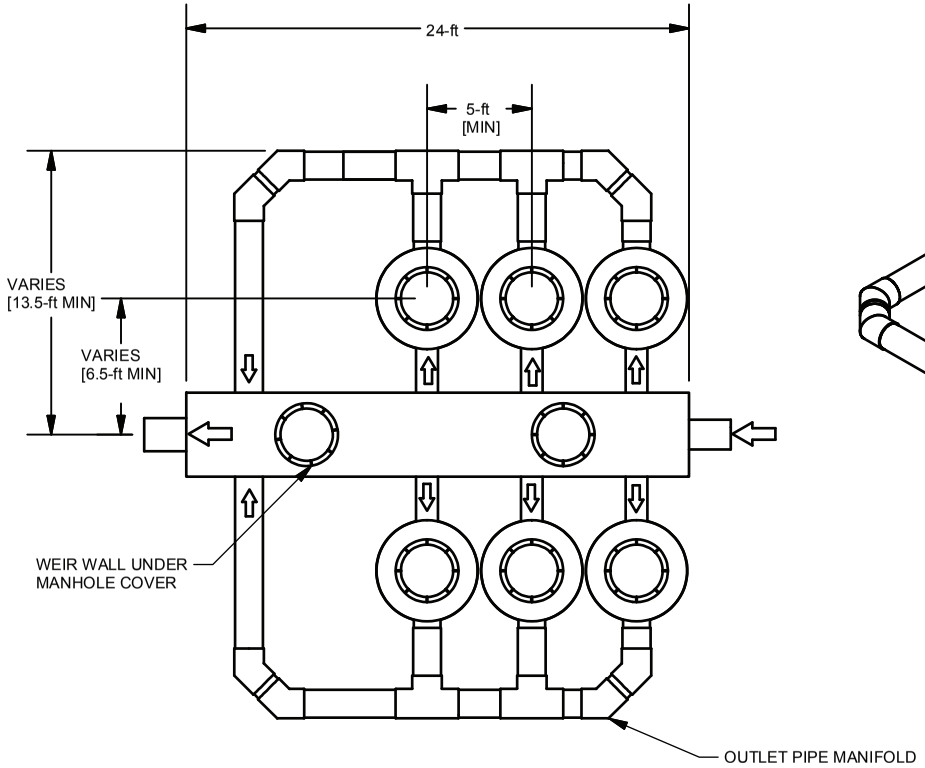

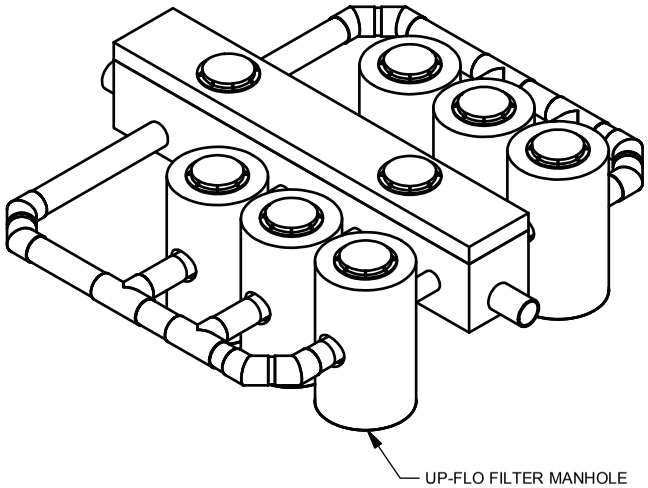

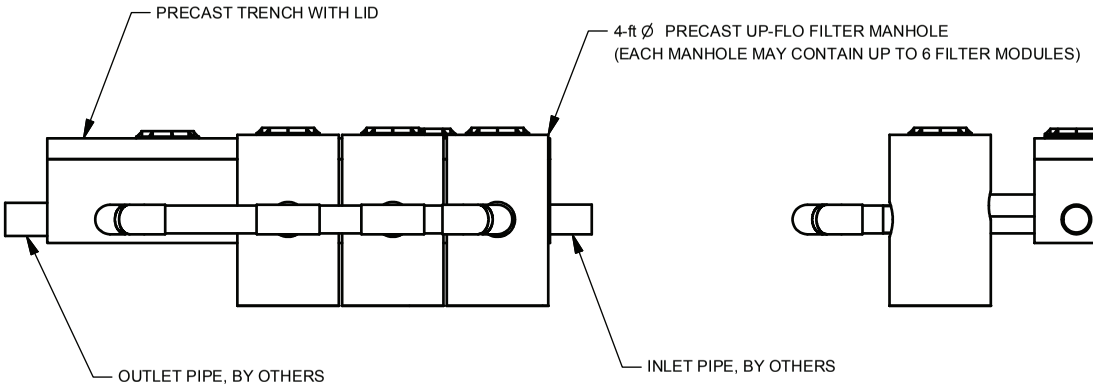

Notes

REVISION HISTORY			
REV	BY	DATE	DESCRIPTION
1		5/30/08	FIRST ISSUE

Date	Scale
5/30/2008	NTS

Drawn	Checked	Approved
DRC		

Title

UP-FLO FILTER GALLERY ™

GENERAL ARRANGEMENT

Hydro International ™

94 Hutchins Drive
Portland, Maine 04102
Tel: (207) 756-6200
Fax: (207) 756-6212
Email: hiltech@hil-tech.com

© 2006
Hydro International

Any warranty made by Hydro International only applies to those items supplied by it. Hydro International does not accept and expressly disclaims any responsibility or liability for any structure, plant or equipment (or the performance thereof) designed, built, manufactured or supplied by any third-party. Hydro International has a policy of continuous product development and reserves the right to amend the specifications of any of its products or equipment at any time. Hydro International expressly disclaims any liability for the performance of its equipment (or any part thereof) used or made subject to conditions outside of the conditions set forth in Hydro International's design specifications. Hydro International owns the copyright in and to this drawing, which is supplied in confidence, and all intended recipients of the drawing, by their use thereof, agree to hold the drawing in confidence and not to use it for any purpose other than for which it was supplied and not reproduce, in whole or in part, the drawing or any of the equipment or structures depicted therein, without prior written permission of Hydro International.

CAD Ref: UFFG-GA2-6MH

Project No.

Drawing No. GA2-6MH Rev.

Up-Flo™ Filter Installation Log

HYDRO INTERNATIONAL REFERENCE NUMBER:	
SITE NAME:	
SITE LOCATION:	
OWNER:	**CONTRACTOR:**
CONTACT NAME:	**CONTACT NAME:**
COMPANY NAME:	**COMPANY NAME:**
ADDRESS:	**ADDRESS:**
TELEPHONE:	**TELEPHONE:**
FAX:	**FAX:**

INSTALLATION DATE: / /

CONFIGURATION (CIRCLE ONE): **MANHOLE** **RETROFIT** **VAULT SYSTEM**

TOTAL NUMBER OF UP-FLO™ FILTER MODULES:

Up-Flo™ Filter Inspection and Maintenance Log

DATE	INITIALS	DEPTH OF FLOATABLES AND OILS	SEDIMENT DEPTH MEASURED	VOLUME OF SEDIMENT REMOVED	NUMBER OF MEDIA PACKS REPLACED	SITE ACTIVITY AND COMMENTS