FIRST FLOOR RENOVATIONS
COLLEGE HILL FILTRATION PLANT

CITY PROJECT NUMBER 05074-W
CITY OF LYNCHBURG, VIRGINIA

BID READY - DRAWINGS

SEPTEMBER 15, 2006

HAYES, SEAY, MATTERN AND MATTERN, INC.

ARCHITECTS - ENGINEERS - PLANNERS

ROANOKE, VIRGINIA

DRAWING INDEX

SHEET NO.	
	GENERAL
G1	TITLE SHEET
G2	ABBREVIATIONS AND LEGENDS
	REFERENCE
R1	FIRST AND SECOND FLOOR ARCHITECTURAL PLANS
R9	FIRST AND SECOND FLOOR ELECTRICAL PLANS
	ARCHITECTURAL
A1	FIRST FLOOR PLAN
A2	SECTIONS & DETAILS
A3	STAIR & RAIL SECTIONS & DETAILS
	MECHANICAL
M1	LEGENDS AND GENERAL NOTES
M2	HVAC AND PLUMBING DEMOLITION FIRST FLOOR
M3	HVAC AND PLUMBING FIRST FLOOR
	ELECTRICAL
E1	LEGEND, GENERAL NOTES AND LIGHTING FIXTURE SCHEDULE
E2	FIRST FLOOR LIGHTING AND POWER PLAN

SEALS

COMMONWEALTH OF VIRGINIA
ROBERT F. CANOVA
No. 004769
9/13/06
PROFESSIONAL ENGINEER

CONSULTANT

FIRST FLOOR RENOVATIONS
COLLEGE HILL FILTRATION PLANT

CITY PROJECT NUMBER 05074–W

CITY OF LYNCHBURG, VIRGINIA

HSMM

ARCHITECTS ENGINEERS PLANNERS

HAYES, SEAY, MATTERN & MATTERN, INC.
1315 FRANKLIN ROAD
ROANOKE, VA 24016
(540) 857–3100 WWW.HSMM.COM

REV	DATE	DESCRIPTION	APP

COMM NO: 60699B
ISSUE DATE: SEPTEMBER 15, 2006
DESIGNED BY: REM
DRAWN BY: REM
CHECKED BY: WCH
SUBMITTED BY: RFC

© HAYES, SEAY, MATTERN & MATTERN, INC., 2006. ALL RIGHTS RESERVED.

GENERAL

TITLE SHEET

G1

ABBREVIATIONS

A	AMPERE, AIR COMPRESSED AIR
AASHTO	AMERICAN ASSOCIATION OF STATE HIGHWAY AND TRANSPORTATION OFFICIALS
AB	ANCHOR BOLT
ABT	ABOUT
ABUT.	ABUTMENT
ABV	ABOVE
AC	ALTERNATING CURRENT, AIR CONDITIONING UNIT, ACRE
ACI	AMERICAN CONCRETE INSTITUTE
ACM	ASBESTOS CONTAINING MATERIAL
ACMU	ACOUSTICAL CONCRETE MASONRY UNITS
ACS	ACCESS
ACST	ACOUSTIC, ACOUSTICAL
A.C.T	ACOUSTIC CEILING TILE
ACV	ALARM CHECK VALVE
ADD.	ADDITIONAL
ADH	ADHESIVE
ADJ	ADJACENT
ADMIN	ADMINISTRATIVE
AFF	ABOVE FINISH FLOOR
AFFF	AQUEOUS FILM FORMING FOAM
AFMS	AIRFLOW MEASURING STATION
AGGR	AGGREGATE
AH	AIR HANDLING, AIR–HANDLING UNIT
AHR	ANCHOR
AIC	AMPERE INTERRUPTING CAPACITY
AISC	AMERICAN INSTITUTE OF STEEL CONSTRUCTION
AL	ALUMINUM
ALT	ALTERNATE
AM.	AMMETER
AMP	AMPERE
ANSI	AMERICAN NATIONAL STANDARDS INSTITUTE
AP	ACCESS PANEL
APPR	APPROVED
APPROX	APPROXIMATE
APS	ALARM PRESSURE SWITCH
ARCH.	ARCHITECTURAL
AREMA	AMERICAN RAILWAY ENGINEERING AND MAINTENANCE–of–WAY ASSOCIATION
ASB	ASBESTOS
ASPH	ASPHALT
ASSY	ASSEMBLY
ASTM	AMERICAN SOCIETY FOR TESTING AND MATERIALS
ASYM	ASYMMETRICAL
ATS	AUTOMATIC TRANSFER SWITCH
AUTO.	AUTOMATIC
AUX	AUXILIARY
AV	AIR VENT, AUDIOVISUAL
AVG	AVERAGE
AWG	AMERICAN WIRE GAUGE
AWS	AMERICAN WELDING SOCIETY
AWWA	AMERICAN WATER WORKS ASSOCIATION
B	BATTERY
BAL	BALANCE
B&B	BALL AND BURLAP
B TO B	BACK TO BACK
BC	BOLT CIRCLE, BOTTOM OF CURB
BD	BOARD
BDL	BUNDLE
BEJ	BRICK EXPANSION JOINT
BET.	BETWEEN
BF	BLIND FLANGE
BG	BOTTOM GRILLE
BITUM	BITUMINOUS
BL, ℄	BUILDING LINE, BASE LINE
BLDG	BUILDING
BLK	BLOCK, BLOCKING
BLW	BELOW
BM	BEAM, BENCH MARK, SOIL STABILIZATION/BLANKETS & MATTING
BOL	BEGINNING OF LINE
BOT	BOTTOM
B.O.W.	BOTTOM OF WALL
BP	BASE PLATE, BACKFLOW PREVENTER, BEARING PLATE
BR	BARE ROOT, BOTTOM REGISTER
BRG	BEARING
BRK	BRICK
BRKT	BRACKET
BSMT	BASEMENT
BTU	BRITISH THERMAL UNIT
BTUH	BTU PER HOUR
BU	BUILT–UP
BUR	BUILT–UP ROOF(ING), BURIED
BW	BOTH WAYS
C	COURSE, CONVECTOR
°C	DEGREES CELSIUS
C TO C	CENTER TO CENTER
C&G	CURB AND GUTTER
C&R	CUT AND REPLACE
CAB.	CABINET
CANTIL	CANTILEVER
CAP.	CAPACITY
CATV	CABLE TELEVISION
CB	CATCH BASIN, CIRCUIT BREAKER
CCTV	CLOSED CIRCUIT TELEVISION
CD	CEILING DIFFUSER, ROCK CHECK DAM
CE	CONSTRUCTION ENTRANCE
CEM	CEMENT
CENT.	CENTRIFUGAL
CF	CELLULAR FLOOR
CFM	CUBIC FEET PER MINUTE
CFS	CUBIC FEET PER SECOND
CG	CORNER GUARD, CHANGE OF GRADE, CEILING GRILLE
CH	CABINET HEATER, CHORD
CHAM	CHAMFER
CHBD	CHALKBOARD
CHEM	CHEMICAL
CHIS	CHISELED
CHKR	CHECKER, CHECKERED
CI	CAST IRON
CIP	CAST IN PLACE, CULVERT INLET PROTECTION
CIRC	CIRCULAR, CIRCUMFERENCE
CJ	CONSTRUCTION JOINT
CKT	CIRCUIT
CL, ℄	CENTER LINE
CLF	CHAIN LINK FENCE
CLG	CEILING
CLJ	CONTROL JOINT
CLO	CLOSET
CLOS	CLOSURE
CLPR	CALIPER
CLR	CLEAR
CLSD	CEILING LINEAR SLOT DIFFUSER
CLSR	CEILING LINEAR SLOT RETURN
CM	CENTIMETER
CMP	CORRUGATED METAL PIPE
CMPSN	COMPOSITION
CMU	CONCRETE MASONRY UNITS
CND	CONDUIT
CNDCT	CONDUCTIVE
CNDS	CONDENSATE, CONDUITS
CO	CLEANOUT, COUNTY
C.O.G.	CHANGE OF GRADE
COL	COLUMN
COMB.	COMBINATION
COMP	COMPRESSION, COMPRESSED
CONC	CONCRETE
COND	CONDUCTOR, CONDUCTIVE, CONDENSER
CONN	CONNECT, CONNECTION
CONST	CONSTRUCTION
CONT	CONTINUOUS, CONTINUATION
CONTR	CONTRACT, CONTRACTOR
COORD	COORDINATE
COP	COPPER
COR	CORNER
CORR	CORRIDOR, CORRUGATED
COV	COVER
CP	CEMENT PLASTER, CONDENSATE PUMP DISCHARGE
CPT	CARPET
CR	CEILING REGISTER, HOT CONDENSER WATER
CSD	CELLULAR STEEL DECK
CT	CERAMIC TILE, CURRENT TRANSFORMER
CTR	CENTER
CTRL	CONTROL
CTSK	COUNTERSUNK
CTWT	COUNTERWEIGHT
CU	CUBIC, COPPER
CULV	CULVERT
CV	CONVERTER
CW	DOMESTIC COLD WATER
CWB	CAPILLARY WATER BARRIER
D	DEPTH, DEGREE OF CURVE, DIMMER SWITCH, DRAINLINE, MOUNTED IN DUCT
DB	DRY BULB, DIRECT BURIAL, DUCT, DEEP BANK, DECIBELS, DEED BOOK
DBL	DOUBLE
DC	DIRECT CURRENT
DECC	DECIDUOUS
DEFL	DEFLECT, DEFLECTION
DEG	DEGREE
DEM	DEMOUNTABLE
DEPR	DEPRESSED
DEPT	DEPARTMENT
DET	DETAIL
DF	DRINKING FOUNTAIN
DH	DUCT HEATER, DOOR HOLDER
DI	DROP INLET, DUCTILE IRON
DIA	DIAMETER
DIAG	DIAGRAM, DIAGONAL
DIFF	DIFFUSER
DIM.	DIMENSION
DIP.	DUCTILE IRON PIPE
DIR	DIRECTION, DIRECT
DISC.	DISCONNECT
DISCH	DISCHARGE
DISP	DISPENSER
DIV	DIVISION
DK	DECK
DL	DEAD LOAD
DMH	DROP MANHOLE
DML	DEMOLITION, DEMOLISH
DMPR	DAMPER
DN	DOWN
DR	DOOR, DRIVE
DS	DOWNSPOUT, DRIP STATION, DIGESTED SLUDGE
DSD	DUCT SMOKE DETECTOR
DTWH	DUAL TEMP WALL HYDRANT
DUP	DUPLICATE
DVTL	DOVETAIL
DW	DUMBWAITER
DWD	DRINKING WATER DISPENSER
DWEL	DWELLING
DWG	DRAWING
DWL	DOWEL
DWV	DRAIN, WASTE, AND VENT
DX	DUPLEX, DIRECT EXPANSION
E	EAST, EMERGENCY (CIRCUIT)
EA	EACH
E.A.T.	ENTERING AIR TEMPERATURE
ECMT	ENCASEMENT
EF	EACH FACE
EFIS	EXTERIOR FINISH INSULATION SYSTEM
EFL	EFFLUENT
EJ	EXPANSION JOINT
EL	ELEVATION
ELEC	ELECTRIC, ELECTRICAL
ELEV	ELEVATOR
EM	EXPANDED METAL
EMER	EMERGENCY
EMT	ELECTRICAL METALLIC TUBING
ENCL	ENCLOSE, ENCLOSURE
ENG	ENGINE
ENGR	ENGINEER
ENT	ENTERING
ENTR	ENTRANCE
EOL	END OF LINE
EP	EXPLOSION–PROOF, EDGE OF PAVEMENT
EQL	EQUAL
EQPT	EQUIPMENT
ER	EXISTING TO REMAIN
ESMT	EASEMENT
E TO E	END TO END
EV	EVERGREEN
EW	EACH WAY, END WALL
EWC	ELECTRIC WATER COOLER
E.W.T.	ENTERING WATER TEMPERATURE
EXC	EXCAVATE, EXCAVATION
EXH	EXHAUST
EXP	EXPOSED
EXPN	EXPANSION
EXST	EXISTING
EXT	EXTERIOR, EXTERNAL
EXTN	EXTENSION
F	FUSED, FAN
°F	DEGREES FAHRENHEIT
F&T	FLOAT AND THERMOSTATIC
F TO F	FACE TO FACE
FA	FIRE ALARM
FAB	FABRICATE
FABL	FIRE ALARM BELL
FACP	FIRE ALARM CONTROL PANEL
FC	FOOTCANDLE, FAN COIL UNIT
FD	FLOOR DRAIN, FIRE DAMPER
FDC	FIRE DEPARTMENT CONNECTION
FDN	FOUNDATION
FDR	FEEDER
FE	FIRE EXTINGUISHER
FEC	FIRE EXTINGUISHER CABINET
FES	FLARED END SECTION
FGL	FIBERGLASS
FH	FIRE HOSE
FHC	FIRE HOSE CABINET
FHYD	FIRE HYDRANT
FIG.	FIGURE
FIN.	FINISH
FL	FLOOR, FLASHING
FLEX.	FLEXIBLE
FLG	FLANGE
FLSH	FLASHING
FLUOR	FLUORESCENT
FOB	FACE OF BRICK, FRONT OF BUILDING
FPM	FEET PER MINUTE
FR	FRAME, FROM
FRICT	FRICTION
FRT	FIRE RETARDANT TREATED
FRZR	FREEZER
FS	FAR SIDE, FULL SIZE, FLOW SWITCH
FT	FOOT
FTG	FOOTING
FUR	FURRED, FURRING
FURN	FURNISH
FUT	FUTURE
FWC	FABRIC WALL COVERING
FXTR	FIXTURE
G	GAS MAIN OR SERVICE LINE
GA	GAGE, GAUGE
GAL	GALLON
GALV	GALVANIZE, GALVANIZED
GC	GROUND COUNTERPOISE
GCMU	GLAZED CONCRETE MASONRY UNIT
GDR	GUARDRAIL
GEN	GENERATOR
GFE	GOVERNMENT FURNISHED EQUIPMENT
GFECI	GOVERNMENT FURNISHED EQUIPMENT, CONTRACTOR INSTALLED
GFI	GROUND FAULT INTERRUPTER
GFM	GOVERNMENT FURNISHED MATERIAL
GHZ	GIGAHERTZ
GI	GALVANIZED IRON
GL	GLASS
GND	GROUND
GOVT	GOVERNMENT
GPH	GALLONS PER HOUR
GPM	GALLONS PER MINUTE
GR	GRADE
GRAD	GRADUATED
GRIL	GRILLE
GRT	GROUT
GRS	GALVANIZED RIGID STEEL
GSU	GLAZED STRUCTURAL UNITS
GTV	GATE VALVE
GVL	GRAVEL
GWB	GYPSUM WALLBOARD
GYP	GYPSUM
H	HIGH
HB	HOSE BIBB
HBD	HARDBOARD
HC	HANDICAPPED
HD	HEAD, HEAT DETECTOR
HDPE	HIGH DENSITY POLYETHYLENE
HDR	HANDRAIL
HDW	HARDWARE
HDWD	HARDWOOD
HDWL	HEADWALL
HGR	HANGER
HGT	HEIGHT
H.I.D.	HIGH–INTENSITY DISCHARGE
HM	HOLLOW METAL
HOA	HAND–OFF–AUTOMATIC
HORIZ	HORIZONTAL
HP	HORSEPOWER, HEAT PUMP
HPF	HIGH POWER FACTOR
HPS	HIGH–PRESSURE SODIUM, HIGH PRESSURE STEAM
HPT	HIGH POINT
HR	HOUR
HS	HORIZONTAL SLOT
HTG	HEATING
HTR	HEATER
HV	HIGH VOLTAGE, HEATING–VENTILATING UNIT
HW	DOMESTIC HOT WATER
HWC	DOMESTIC HOT WATER CIRCULATING
HWL	HIGH–WATER LINE
HYD	HYDRANT
HZ	HERTZ
I	INTERCOM
IC	INTERRUPTING CAPACITY
ID	INSIDE DIAMETER
IG	ISOLATED GROUND
IMC	INTERMEDIATE METAL CONDUIT
IN.	INCH
INCAND	INCANDESCENT
INCL	INCLUSIVE
INCR	INCREMENT
IND	INDUCTION
INFL	INFLUENT
INSTL	INSTALL, INSTALLATION
INSUL	INSULATION, INSULATED, INSULATOR, INSULATING
INT	INTEGRATED, INTERIOR
INTMD	INTERMEDIATE
INV	INVERT, INVERSE
IP	IRON PIN, STORM DRAIN INLET PROTECTION
IPF	IRON PIN FOUND, IRON PIPE FOUND
IR	IRRIGATION
ISOL	ISOLATOR
J	JOULE
JB	JUNCTION BOX
JC	JANITOR'S CLOSET
JCT	JUNCTION
JST	JOIST
JT	JOINT
K	KEY OPERATED, KIP
KCM	THOUSAND CIRCULAR MILS
KCP	KEENE'S CEMENT PLASTER
kg	KILOGRAM
kg/S	KILOGRAM PER SECOND
kHZ	KILOHERTZ
km	KILOMETER
kN	KILONEWTON
KO	KNOCKOUT
kPa	KILOPASCAL
KSF	KIPS PER SQUARE FOOT
KSI	KIPS PER SQUARE INCH
kV	KILOVOLT
kVA	KILOVOLT–AMPERE
kVAR	KILOVOLT–AMPERE REACTIVE
KW	KILOWATT
kWH	KILOWATT HOUR
L	LEFT, LENGTH OF CURVE, LONG
LA	LIGHTNING ARRESTER
LAB	LABORATORY
LAM	LAMINATE
LAT	LATITUDE, LATERAL
LAV	LAVATORY
LB	POUND
LCG	LACING
LDG	LOADING
LF	LINEAR FOOT, LINEAR FEET
LG	LENGTH, LONG
LIQ	LIQUID
LKR	LOCKER
LL	LIVE LOAD
LLH	LONG LEG HORIZONTAL
LLV	LONG LEG VERTICAL
LOC	LOCATE
LONG.	LONGITUDINAL
LPS	LOW PRESSURE SODIUM
LPT	LOW POINT
LR	LONG RADIUS, LINEAR REGISTER
LS	LUMP SUM, LIMIT SWITCH
LT	LIGHT
LTG	LIGHTING
LV	LOW VOLTAGE
LVR	LOUVER
LW	LONG WAY, LIMIT OF WORK
LWC	LIGHTWEIGHT CONCRETE
LWL	LOW–WATER LINE
L.W.T.	LEAVING WATER TEMPERATURE
M	MICROPHONE, MANUAL
m	METER
MACH	MACHINE
MAG	MAGNETIC
MATL	MATERIAL
MATV	MASTER ANTENNA TELEVISION
MAX	MAXIMUM
MBH	1000 BTU PER HOUR
MBR	MEMBER
MCB	MAIN CIRCUIT BREAKER
MCC	MOTOR CONTROL CENTER
MECH	MECHANICAL
MEMB	MEMBRANE
MET.	METAL
MFR	MANUFACTURER
M/G	MOTOR/GENERATOR
MGD	MILLION GALLONS PER DAY
MH	MANHOLE, MOUNTING HEIGHT, METAL HALIDE
MHZ	MEGAHERTZ
MID	MIDDLE
MIN	MINIMUM
MISC	MISCELLANEOUS
MJ	MECHANICAL JOINT
MK	MARK
MKBD	MARKER BOARD
MLO	MAIN LUGS ONLY
mm	MILLIMETER
MO	MASONRY OPENING
MON	MONUMENT
MP	MEDIUM PRESSURE
MPa	MEGAPASCAL
MPH	MILES PER HOUR
MR	MOP RECEPTOR
MSL	MEAN SEA LEVEL
MT	MOUNT
MTD	MOUNTED
MTG	MOUNTING
MTR	MOTOR
MTZ	MOTORIZED
MU	MULCHING
MUL	MULLION
MUTCD	MANUAL OF UNIFORM TRAFFIC CONTROL DEVICES
MWP	MEMBRANE WATERPROOFING
N	NORTH
NA	NOT APPLICABLE
N.C.	NORMALLY CLOSED
N & D	NAIL AND DISC
NEC	NATIONAL ELECTRICAL CODE
NEUT	NEUTRAL
NFPA	NATIONAL FIRE PROTECTION ASSOCIATION
NIC	NOT IN CONTRACT
N.O.	NORMALLY OPEN
NO., NOS	NUMBER, NUMBERS
NOM	NOMINAL
NPRN	NEOPRENE
NPW	NONPOTABLE WATER
NRS	NONRISING STEM
NS	NEAR SIDE
NST	NONSLIP TREAD
NTS	NOT TO SCALE
O TO O	OUT TO OUT
OA	OVERALL, OUTSIDE AIR
OC	ON CENTER
OD	OUTSIDE DIAMETER
O.F.	OUTSIDE FACE
OFCI	OWNER–FURNISHED CONTRACTOR–INSTALLED
OH	OVERHEAD, OPPOSITE HAND
OP	OUTLET PROTECTION
OPNG	OPENING
OPP	OPPOSITE
OS&Y	OUTSIDE SCREW AND YOKE
OVHD	OVERHEAD
OZ	OUNCE
P	POLE, POWER, PUMP
PA	PIPE ANCHOR
Pa	PASCAL
PB	PUSH BUTTON, PANELBOARD
PC	POINT OF CURVE, PIECE
PCC	POINT OF COMPOUND CURVE, PRECAST CONCRETE
PCP	PRECAST CONCRETE PANEL
PCSP	PRECAST CONCRETE SANDWICH PANEL
PD	PRESSURE DROP
PED	PEDESTAL
PEJ	PREMOLDED EXPANSION JOINT
PF	POROUS FILL
P.F.	POWER FACTOR
PG	PIPE GUIDE, PAGE
PH	PHASE, PENTHOUSE
PI	POINT OF INTERSECTION
PIV	POST INDICATOR VALVE
PL, ℄	PLATE, PROPERTY LINE
PLAM	PLASTIC LAMINATE
PLAS	PLASTER
PLATF	PLATFORM
PLF	POUNDS PER LINEAR FOOT
PLYWD	PLYWOOD
PNL	PANEL
PNLBD	PANELBOARD
PNT	PAINT, PAINTED
POB	POINT OF BEGINNING
POL	POLISH, POINT ON LINE
PPH	POUNDS PER HOUR
PR	PAIR
PRC	POINT OF REVERSE CURVE
PREFIN	PREFINISHED
PRESS.	PRESSURE
PRI	PRIMARY
PRL	PARALLEL
PROP.	PROPOSED
PROV	PROVIDED
P.R.S.	PRESSURE REDUCING STATION
PRV	PRESSURE REDUCING VALVE, POWER ROOF VENTILATOR
PS	PRESSURE SWITCH, PERMANENT SEEDING, POINT OF SWITCH
PSC	PRESTRESSED CONCRETE
PSF	POUNDS PER SQUARE FOOT
PSI	POUNDS PER SQUARE INCH
PSIG	POUNDS PER SQUARE INCH GAGE
PT	POINT OF TANGENT, POTENTIAL TRANSFORMER
PTN	PARTITION
PVC	POINT OF VERTICAL CURVE, POLYVINYL CHLORIDE
PVI	POINT OF VERTICAL INTERSECTION
PVMT	PAVEMENT
PVT	POINT OF VERTICAL TANGENT, PRIVATE
PWR	POWER
QT	QUARRY TILE
ø	ROUND (DIAMETER), PHASE
R	RISER, RIGHT, RADIUS
R/W	RIGHT OF WAY
RA	RETURN AIR
RAD	RADIUS
RAF	RAISED ACCESS FLOOR
RAS	RETURN ACTIVATED SLUDGE
RBR	RUBBER
RCP	REINFORCED CONCRETE PIPE
RCPT	RECEPTACLE
RCVG	RECEIVING
RCVR	RECEIVER
RD	ROOF DRAIN, ROAD
RDCR	REDUCER
REC	RECESS
RECIR	RECIRCULATING
RECT	RECTANGLE, RECTANGULAR
RED.	REDUCING
REF	REFERENCE
REFL	REFLECTED
REFR	REFRIGERATOR
REINF	REINFORCE, REINFORCEMENT, REINFORCED
REM	REMAINDER
REQD	REQUIRED
RESIL	RESILIENT
REV	REVISION
RF	ROOF, RADIO FREQUENCY
RFG	ROOFING
RFH	ROOF HATCH
RFI	RADIO FREQUENCY INTERFERENCE
RL	ROOF LEADER, REFRIGERANT LIQUID
RM	ROOM
RND	ROUND
RO	ROUGH OPENING
RPM	REVOLUTIONS PER MINUTE
RR	RIPRAP, RAILROAD
RTE	ROUTE
S	SOUTH, SANITARY, SEWER, SPEAKER, SWITCH, SUPPLY
SA	SUPPLY AIR
SAN	SANITARY
SCFM	STANDARD CUBIC FEET PER MINUTE
SCHED	SCHEDULE
SD	STORM DRAIN, SMOKE DETECTOR
SEC	SECONDARY
SECT	SECTION
SF	SILT FENCE
SFP	SPRAYED FIRE PROTECTION
SH	SHEET
SHV	SHELVING
SIM	SIMILAR
SK	SKETCH
SLP	SLOPE
SMR	SURFACE METAL RACEWAY
S/N	SOLID NEUTRAL
SNT	SEALANT
SOG	SLAB ON GRADE
SP	SPACE, SPACES, STATIC PRESSURE
SPD	STATIC PRESSURE DROP
SPEC	SPECIFICATION
SPKR	SPEAKER
SPMR	SINGLE–PLY MEMBRANE ROOF
SPR	SPRINKLER
SPRT	SUPPORT
SPS	STATIC PRESSURE SENSOR
SQ	SQUARE
SS	SANITARY SEWER
SSD	SUBSURFACE DRAIN
SSK	SOIL STACK
SSMR	STANDING SEAM METAL ROOF
SST	STAINLESS STEEL
ST	STREET, STORY, STEAM, SEDIMENT TRAP
STA	STATION
STD	STANDARD CUBIC FEET PER MINUTE
STER	STERILIZER
STIF	STIFFENER
STIR.	STIRRUP
STL	STEEL
STOR	STORAGE
STR	STRAIGHT, STARTER
STRL	STRUCTURAL
STRUC	STRUCTURE
SUBSTA	SUBSTATION
SUP	SUPPLY
SURF.	SURFACE
SUSP	SUSPENDED
SV	SHEET VINYL, STEAM VENT
SVCE	SERVICE
SW	SHORT WAY, SWITCH, SIDEWALK
SWBD	SWITCHBOARD
SWGR	SWITCHGEAR
SYMM	SYMMETRICAL
SYS	SYSTEM
T	TREAD, TOP, TANGENT, TELEPHONE, THICKNESS
T&B	TOP AND BOTTOM
T&G	TONGUE AND GROOVE
T&P	TEMPERATURE AND PRESSURE
TAF	TROWEL APPLIED FINISH
TBM	TEMPORARY BENCH MARK
TC	TOP OF CURB, TIME CLOCK
TDC	TURNED DOWN CURB
TEL	TELEPHONE
TEMP	TEMPERATURE, TEMPERED, TEMPORARY
TER	TERRAZZO
TERM.	TERMINAL
TFE	TETRAFLUOROETHYLENE
TG	TOP GRILLE
THERM.	THERMOMETER
THK	THICK
THKNS	THICKNESS
THR	THRESHOLD
TKBD	TACKBOARD
TLSD	TOP LINEAR SLOT DIFFUSER
TMV	THERMAL MIXING VALVE
TOC	TOP OF CONCRETE
TOF	TOP OF FOOTING
TOS	TOP OF STEEL
TOT.	TOTAL
TP	TREE PROTECTION
T.O.W.	TOP OF WALL
TR	TOP REGISTER, TOP OF RAIL
TRANSV	TRANSVERSE
TRTD	TREATED
TS	TEMPERATURE STEEL, TIME SWITCH, TAMPER SWITCH, TEMPERATURE SWITCH, THICKENED SLUDGE, TEMPORARY SEEDING, TRAVERSE STATION
TSD	TEMPORARY SLOPE DRAIN
TSP	TWISTED SHIELDED PAIR
TST	TWISTED SHIELDED TRIPLE
T'STAT	THERMOSTAT
TU	TERMINAL UNIT
TV	TELEVISION, TELEVISION OUTLET
TYP	TYPICAL
UC	UNDERCUT
UF	UNDERFLOOR
UFD	UNDER FLOOR DUCT
UG	UNDERGROUND
UH	UNIT HEATER
UHF	ULTRAHIGH FREQUENCY
UL	UNDERWRITERS' LABORATORY
ULT	ULTIMATE
UNIF	UNIFORM
UNO	UNLESS NOTED OTHERWISE
UPS	UNINTERRUPTIBLE POWER SUPPLY
UR	URINAL
U.S.	URINAL SCREEN
UTIL	UTILITY
V	VOLTAGE, VOLT, VENT, VALVE
VA	VOLT–AMPERE
VAC	VACUUM, VOLTS AC
VAR	VOLT–AMPERE REACTIVE
VAV	VARIABLE AIR VOLUME
VB	VAPOR BARRIER
VC	VERTICAL CURVE
VCT	VINYL COMPOSITION TILE
VD	VOLUME DAMPER
VDC	VOLTS DC
VEL	VELOCITY
VENT.	VENTILATE
VERT	VERTICAL
VEST.	VESTIBULE
VFD	VARIABLE FREQUENCY DRIVE
VHF	VERY HIGH FREQUENCY
VIB	VIBRATION
VIF	VERIFY IN FIELD
VIN	VINYL COMPOSITION TILE
VLT	VAULT
VM	VOLTMETER
VOL	VOLUME
VR	VAPOR RETARDER
VS	VERTICAL SLOT
VT	VINYL TILE
VTR	VENT THRU ROOF
VWC	VINYL WALL COVERING
W	WEST, WATT, WIDE, WIRE, WATER MAIN OR SERVICE LINE
W/	WITH
W/O	WITHOUT
WA	WAINSCOT
WAS	WASTE ACTIVATED SLUDGE
WB	WET BULB, WIND BEAM
WC	WATER CLOSET
WD	WOOD, WIDTH
WDO	WINDOW
WFD	WATER FLOW DETECTOR
WG	WATER GAGE
WH	WALL HYDRANT
WHA	WATER HAMMER ARRESTER
WHS	WELDED HEAD STUD
WI	WROUGHT IRON
WL	WIND LOAD, WATER LINE
WM	WATER METER
WP	WORKING POINT, WEATHERPROOF
WPF	WATERPROOFING
WS	WATER SURFACE, WATERSTOP
WST	WASTE
WT	WEIGHT
WTR	WATER
WTS	WELDED THREADED STUD
WWF	WELDED WIRE FABRIC (WELDED WIRE REINFORCEMENT)
XARM	CROSS ARM
XFMR	TRANSFORMER
XFR	TRANSFER
XMTR	TRANSMITTER
YD	YARD
YHYD	YARD HYDRANT

LEGEND

BUILDING MATERIALS

- EARTH
- CRUSHED STONE
- CONCRETE
- STEEL
- CONCRETE MASONRY UNITS
- BRICK
- ACOUSTICAL TILE
- ROUGH WOOD
- FINISH WOOD
- PLYWOOD
- PLASTER OR GWB
- BATT INSULATION
- RIGID INSULATION
- COMPRESSIBLE FILLER

DRAWING CONVENTIONS

SHEET NUMBERING

A1 — SEQUENCE; DISCIPLINE DESIGNATION

G	GENERAL	I	INTERIORS
D	DEMOLITION	QF	FOOD SERVICE
V	SURVEY	FA	FIRE ALARM
B	GEOTECHNICAL	FP	FIRE PROTECTION
C	CIVIL	P	PROCESS
L	LANDSCAPE	DQ	MATERIAL HANDLING
S	STRUCTURAL	M	MECHANICAL
LS	LIFE SAFETY	E	ELECTRICAL
A	ARCHITECTURAL	T	TELECOMMUNICATIONS

SPACE

COMMUNITY ROOM 213 — FLOOR NUMBER; SPACE NUMBER

ELEVATIONS

EXTERIOR: NUMBER; 1 A101A A201

INTERIOR: 1 A101A A401 2

DETAIL

NUMBER; 1 A101A A501; A102B — SHEET WHERE DRAWN; SHEET(S) WHERE TAKEN

SECTION

NUMBER; 1 A101A A201

DRAWING REVISION

1 — REVISION NUMBER; LIMIT OF REVISION

SEALS

COMMONWEALTH OF VIRGINIA — ROBERT F. CANOVA — No. 004769 — 9/13/06 — PROFESSIONAL ENGINEER

CONSULTANT

FIRST FLOOR RENOVATIONS
COLLEGE HILL FILTRATION PLANT

CITY PROJECT NUMBER 05074–W

CITY OF LYNCHBURG, VIRGINIA

HSMM

ARCHITECTS ENGINEERS PLANNERS

HAYES, SEAY, MATTERN & MATTERN, INC.
1315 FRANKLIN ROAD
ROANOKE, VA 24016
(540) 857–3100 WWW.HSMM.COM

REV	DATE	DESCRIPTION	APP

COMM NO:	60699B
ISSUE DATE:	SEPTEMBER 15, 2006
DESIGNED BY:	GHR
DRAWN BY:	
CHECKED BY:	
SUBMITTED BY:	

© HAYES, SEAY, MATTERN & MATTERN, INC., 2006. ALL RIGHTS RESERVED.

GENERAL

ABBREVIATIONS AND LEGENDS

G2

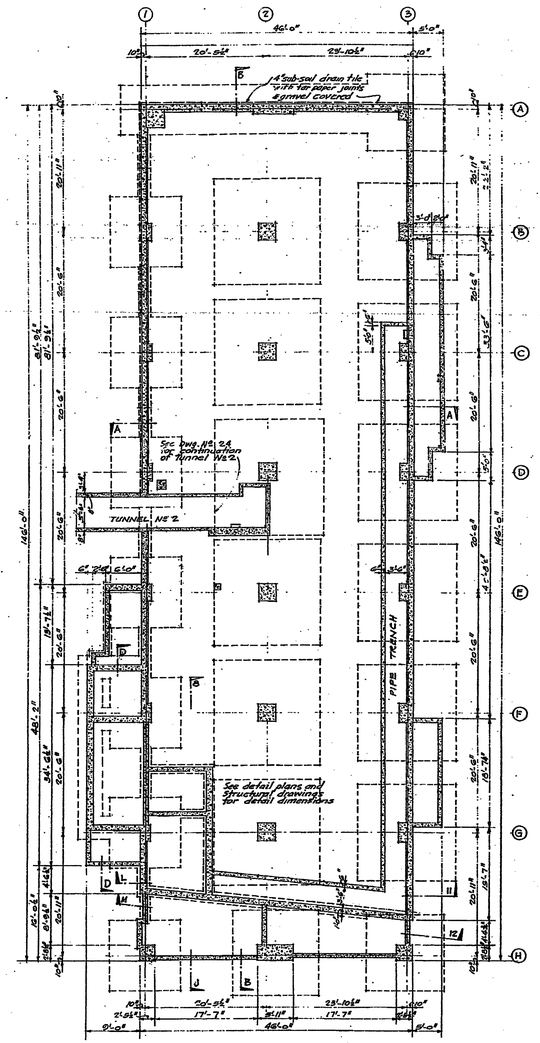

FOUNDATION PLAN
Scale: 1/8"=1'-0"

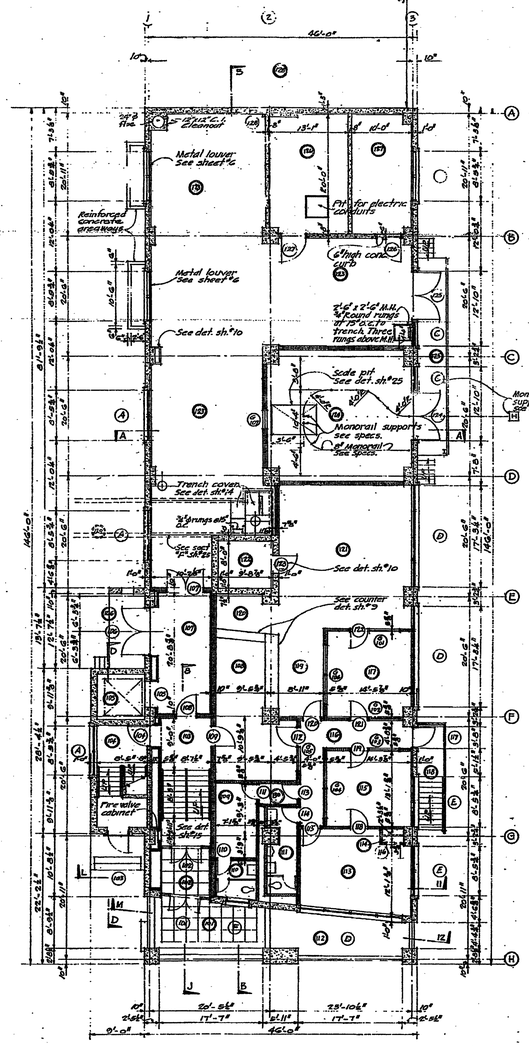

FIRST FLOOR PLAN
Scale 1/8"=1'-0"

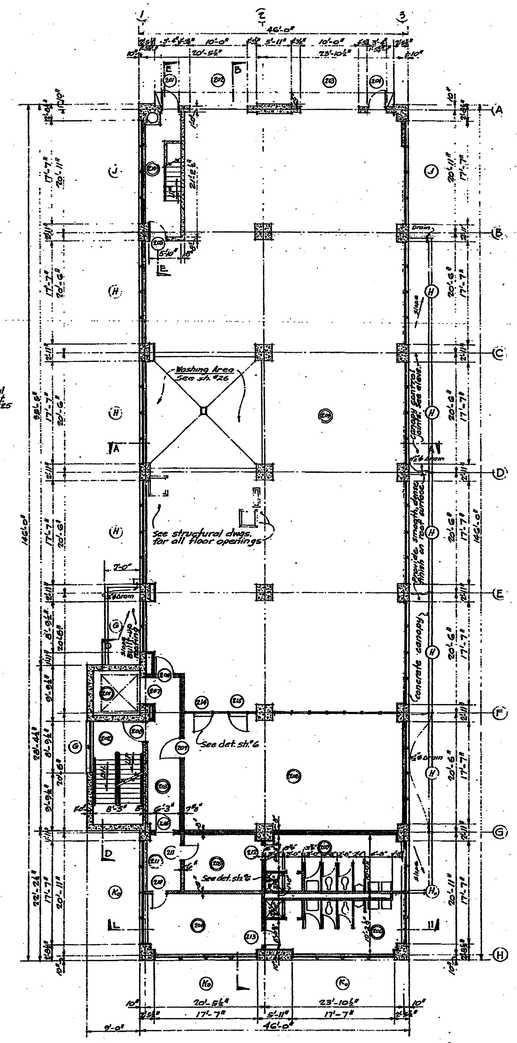

SECOND FLOOR PLAN
Scale 1/8"=1'-0"

SCHEDULE OF ROOM SPACES	
SPACE	DESIGNATION
101	Porch Stair
102	Vestibule
103	Lobby
104	Stair Tower No. 1
105	Elevator
106	Unloading Dock No. 1
107	Service Vestibule
108	Foyer
109	Women's Lounge
110	Women's Toilet
111	Men's Toilet
112	Planting Bed
113	Office No. 1
114	Closet
115	Office No. 2
116	Passage
117	Office No. 3
118	Side Entrance
119	Cash Receipts
120	Receptionist
121	Accounting
122	Vault
123	Mechanical Equipment Area
124	Chlorine Storage Room
125	Unloading Dock No. 2
126	Elec. Switch Room
127	Transformer Room
128	Tunnel No. 1
129	Tunnel No. 2
130	Passage to Women's Lounge
201	Elevator
202	Stair Tower No. 1
203	Corridor
204	White Locker Room
205	Colored Locker Room
206	White Toilet
207	Colored Toilet
208	Storage Room
209	Garage
210	Stair Tower No. 2
211	Vestibule

Note: For stair details see sections D-D & E-E on sheets #16 & #26

1/4" drains on northwest canopy shall be pre-cast to slope similar to "Spanlite" slope-canopy roof to drains as indicated.

Built-up roofing not required on northwest canopy roof surface.

Note: All dimensions shown on plans are from rough to rough of masonry.

AS BUILT PLAN
THIS PLAN SHOWS FINAL CONSTRUCTION AS OF
1-5-6

FOUNDATION PLAN
FIRST FLOOR & SECOND FLOOR PLANS

NEW FILTER PLANT
FOR THE
CITY OF LYNCHBURG
LYNCHBURG, VIRGINIA

WILEY & WILSON
CONSULTING ENGINEERS
LYNCHBURG, VA. RICHMOND, VA.

MADE BY: T.R.L.	SCALE: 1/8"=1'-0"
TRACED BY: T.R.L.	DATE: JUNE 30, 1955
APPROVED BY: W.M.J.	CONTR. No.: 5327
PERMANENT FILE No. 55-340	DWG. 2

COMMONWEALTH OF VIRGINIA
Mark Chesnutt
MARK A. LINCHAN
CERTIFICATE No. 980

REVISIONS

THIS DRAWING PROVIDED FOR REFERENCE ONLY

SEALS

COMMONWEALTH OF VIRGINIA
ROBERT F. CANOVA
No. 004769
9/13/06
PROFESSIONAL ENGINEER

CONSULTANT

FIRST FLOOR RENOVATIONS
COLLEGE HILL FILTRATION PLANT

CITY PROJECT NUMBER 05074-W

CITY OF LYNCHBURG, VIRGINIA

HSMM

ARCHITECTS ENGINEERS PLANNERS

HAYES, SEAY, MATTERN & MATTERN, INC.
1315 FRANKLIN ROAD
ROANOKE, VA 24016
(540) 857-3100 WWW.HSMM.COM

REV	DATE	DESCRIPTION	APP

COMM NO:	60699B
ISSUE DATE:	SEPTEMBER 15, 2006
DESIGNED BY:	WCH
DRAWN BY:	REM
CHECKED BY:	X
SUBMITTED BY:	X

© HAYES, SEAY, MATTERN & MATTERN, INC., 2006. ALL RIGHTS RESERVED.

REFERENCE

FIRST AND SECOND FLOOR ARCHITECTURAL PLANS

R1

M:\60000SERIES\60699B\CADD\DWG\1ST_FLR_REMODEL_PKG\FV9C_E_R1.DWG 60699B 09/13/2006 15:06:21 ROBERT
RF: fv9xbdr IMG: SHT2,1955.TIF

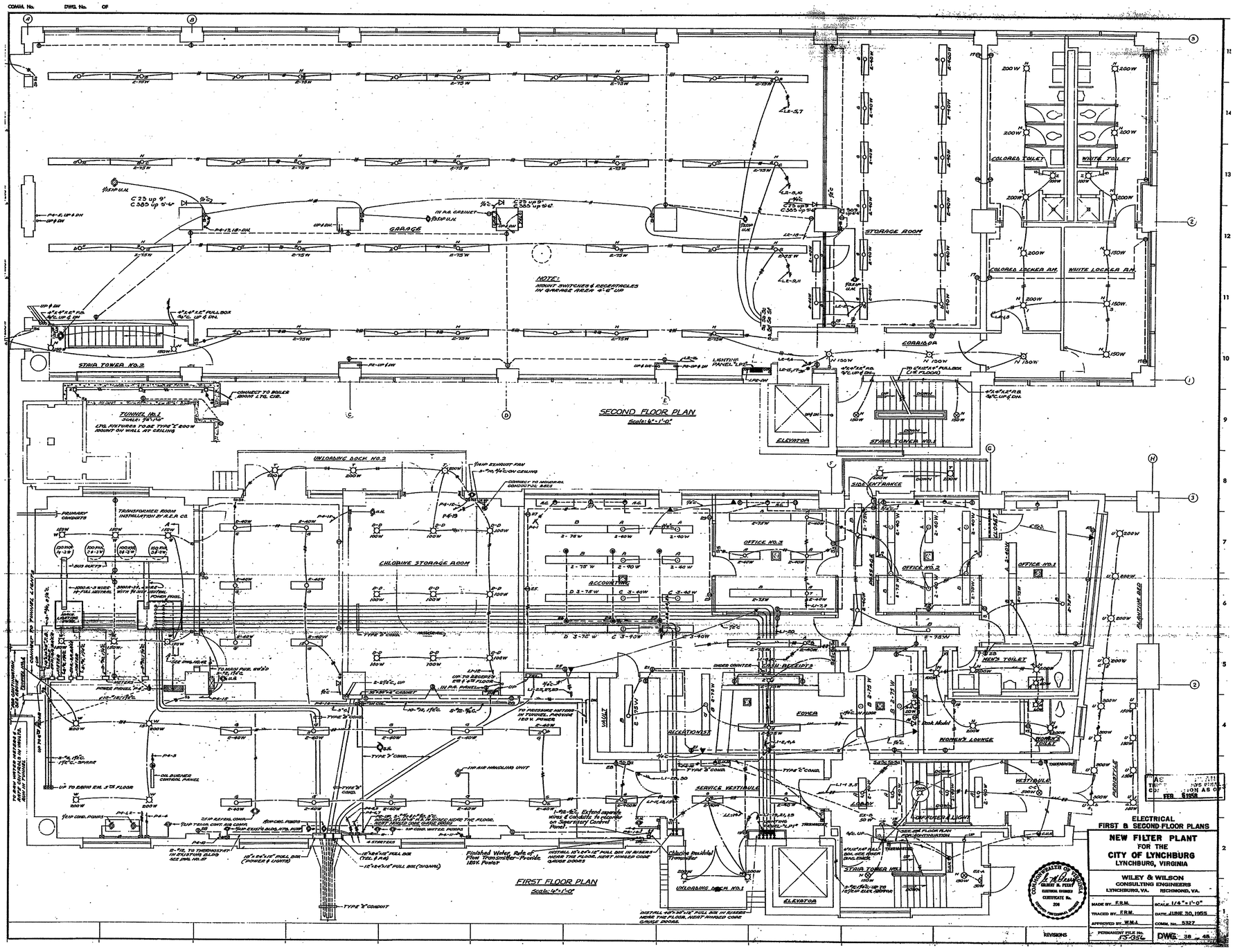

SEALS

COMMONWEALTH OF VIRGINIA
ROBERT F. CANOVA
No. 004769
9/13/06
PROFESSIONAL ENGINEER

CONSULTANT

FIRST FLOOR RENOVATIONS
COLLEGE HILL FILTRATION PLANT

CITY PROJECT NUMBER 05074–W

CITY OF LYNCHBURG, VIRGINIA

HSMM

ARCHITECTS ENGINEERS PLANNERS

HAYES, SEAY, MATTERN & MATTERN, INC.
1315 FRANKLIN ROAD
ROANOKE, VA 24016
(540) 857–3100 WWW.HSMM.COM

REV	DATE	DESCRIPTION	APP

COMM NO:	60699B
ISSUE DATE:	SEPTEMBER 15, 2006
DESIGNED BY:	RFC
DRAWN BY:	REM
CHECKED BY:	X
SUBMITTED BY:	X

© HAYES, SEAY, MATTERN & MATTERN, INC., 2006. ALL RIGHTS RESERVED.

REFERENCE

FIRST AND SECOND FLOOR ELECTRICAL PLANS

R9

M:\60000SERIES\60699B\CADD\DWG\1ST_FLR_REMODEL_PKG\FV9C_E_R9.DWG 60699B 09/13/2006 15:16:15 ROBER
RF: fv9xbdr IMG: SHT38,1955.TIF

FINISH SCHEDULE

SPACE NO	SPACE NAME	FLOOR	BASE	WALLS		CEILING			NOTES
				MATERIAL	FINISH	MATERIAL	FINISH	HEIGHT	
115	PASSAGE	EXST CPT	EXST VB	EXST GWB/CMU	EXST VWC	EXST ACP	–	–	
116	OPEN OFFICE	CPT	VB	GWB	PAINT	ACP	–	8'–0"	

DOOR SCHEDULE

DOOR						FRAME								
NO	TYPE	MATL	SIZE W X H	LOUVER OR UC	GLASS TYPE	GLASS TYPE	TYPE	MATERIAL	HEAD	JAMB	THRESH	FIRE RATING	HARD-WARE	NOTES
115	SEE SH A2	AL	3'–0"x7'–0"	–	TEMP	INSUL TEMP	SEE SH A2	AL	SEE SH A2	SEE SH A2	ALUM	–	SEE SPECS	WEATHERSTRIP

GENERAL DEMOLITION NOTES:

1. VERIFY ALL DIMENSIONS AND CONDITIONS IN FIELD.
2. SEE ARCHITECTURAL FLOOR PLAN FOR NEW LAYOUT & DIMENSIONS.
3. SHORE AND BRACE ALL WORK TO REMAIN.
4. COORDINATE WORK WITH MECHANICAL & ELECTRICAL.
5. DEMOLITION AND REMOVAL SHALL BE COMPLETE – INCLUDING PLUMBING, MECHANICAL, PROCESS, AND ELECTRICAL ITEMS. CAP ALL ABANDONED LINES NOT TO BE REMOVED.
6. DEMOLITION WORK SHALL ENABLE CONSTRUCTION OF NEW WORK.

DEMOLITION KEYNOTES:

1. REMOVE DOOR & FRAME
2. REMOVE PORTION OF MASONRY WALL
3. REMOVE WINDOW AND FRAME
4. REMOVE CONCRETE SILL WALL
5. REMOVE CONCRETE STAIR & METAL RAILINGS
6. REMOVE GWB & STUD PARTITION
7. REMOVE MONORAIL SYSTEM & SUPPORTS
8. REMOVE A PORTION OF EXTERIOR WALL FOR NEW 18"x18" LOUVER – PATCH TO MATCH ADJACENT SURFACES – SEE MECH DWGS
9. REMOVE A EXISTING DAMPER & FAN – INFILL W/ CMU TO MATCH WALL THICKNESS & FINISH TO MATCH ADJACENT SURFACES

GENERAL NOTES:

1. VERIFY ALL DIMENSIONS & CONDITIONS IN FIELD.
2. PATCH EXISTING SURFACES TO REMAIN TO MATCH. PREPARE SURFACES TO RECEIVE NEW FINISHES AS SCHEDULED.

STRUCTURAL NOTES:

1. UNLESS OTHERWISE SHOWN, BARS AT WALL AND CONTINUOUS FOOTING CORNERS AND INTERSECTIONS SHALL BE DETAILED AS SHOWN ON FIGURE 15 OF ACI 315–99. CORNER BARS SHALL BE DETAILED AS SHOWN FOR OUTSIDE LOADED CORNERS.
2. CONCRETE WALL SHALL BE TEMPORARILY BRACED AGAINST EARTH PRESSURE AND OTHER FORCES UNTIL FLOOR SLABS ARE IN PLACE AND HAVE ATTAINED REQUIRED STRENGTHS.
3. CHAMFER EDGES OF PERMANENTLY EXPOSED CONCRETE SURFACES 3/4–INCH, UNO.
4. THE CONTRACTOR SHALL VERIFY ALL DIMENSIONS, ELEVATIONS, ETC., NECESSARY FOR THE PROPER CONSTRUCTION AND ALIGNMENT OF THE NEW PORTIONS OF THE STRUCTURE TO THE EXISTING STRUCTURE. THE CONTRACTOR SHALL VERIFY ALL MEASUREMENTS NECESSARY FOR PROPER FABRICATION AND ERECTION OF ALL STRUCTURAL MEMBERS.
5. BEFORE PROCEEDING WITH ANY WORK WITHIN OR ADJACENT TO THE EXISTING STRUCTURE, THE CONTRACTOR SHALL BECOME FAMILIAR WITH EXISTING CONDITIONS. DURING THE PROCESS OF CONSTRUCTION, IT SHALL BE THE CONTRACTOR'S RESPONSIBILITY TO MAINTAIN THE INTEGRITY OF THE EXISTING STRUCTURE WHERE THE EXISTING STRUCTURE IS MODIFIED TO ACCOMMODATE NEW CONSTRUCTION AND TO PROTECT FROM DAMAGE THOSE PORTIONS OF THE EXISTING STRUCTURE, WHICH ARE TO REMAIN.
6. THE CONTRACTOR SHALL NOTIFY THE OWNER'S REPRESENTATIVE OF ANY EXISTING CONDITIONS THAT DIFFER FROM THOSE INDICATED ON THE DRAWINGS.

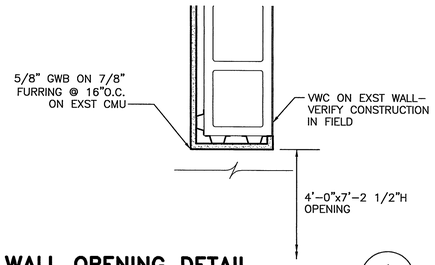

WALL OPENING DETAIL
SCALE: 1–1/2"=1'–0"

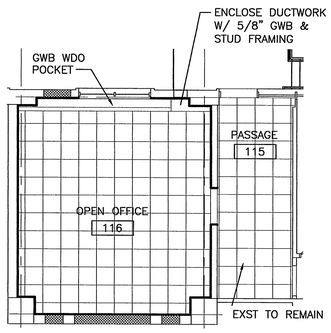

REFLECTED CEILING PLAN
SCALE: 1/8"=1'–0"

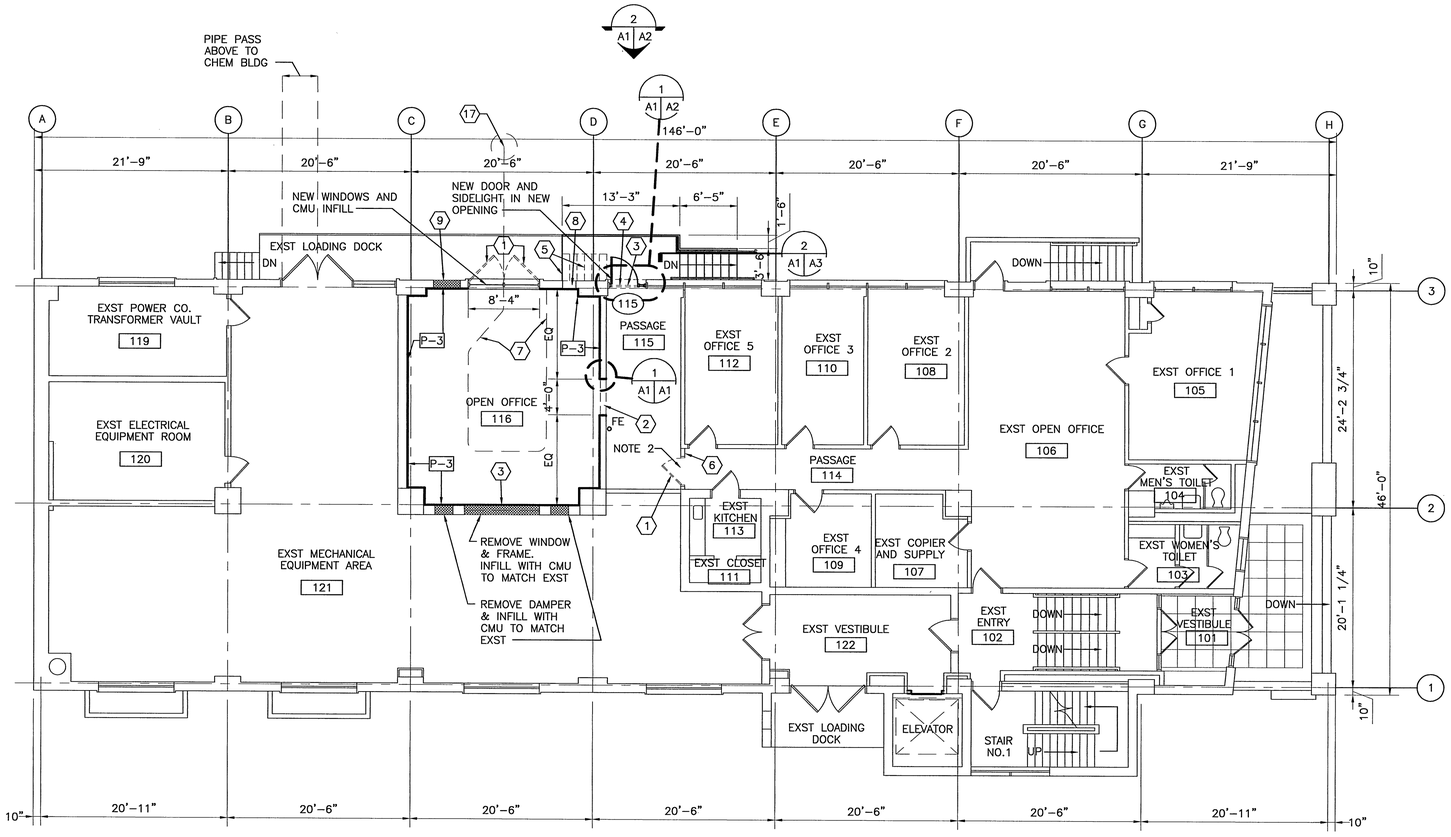

FIRST FLOOR PLAN
SCALE: 1/8"=1'–0"

PLAN NORTH

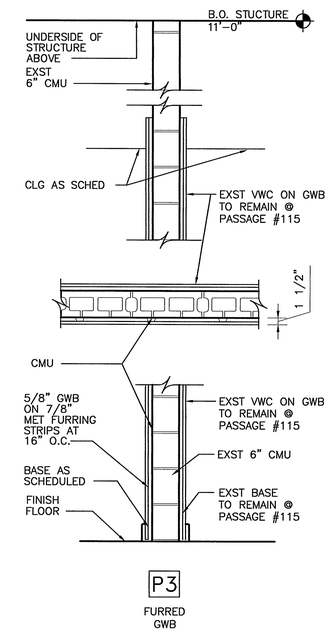

1 1/2"=1'–0" 12" 9" 6" 3" 0 1'

1/8"=1'–0" 8' 4' 0 8' 16'

SEALS

COMMONWEALTH OF VIRGINIA — DAVID A. PUGH — No. 007870 — 9.15.06 — ARCHITECT — ARCHITECTURE ONLY

COMMONWEALTH OF VIRGINIA — DAVID E. SELLARS — No. 38318 — 9/15/06 — PROFESSIONAL ENGINEER — STRUCTURAL ONLY

CONSULTANT

FIRST FLOOR RENOVATIONS
COLLEGE HILL FILTRATION PLANT

CITY PROJECT NUMBER 05074–W

CITY OF LYNCHBURG, VIRGINIA

HSMM
ARCHITECTS ENGINEERS PLANNERS
HAYES, SEAY, MATTERN & MATTERN, INC.
1315 FRANKLIN ROAD
ROANOKE, VA 24016
(540) 857–3100 WWW.HSMM.COM

REV	DATE	DESCRIPTION	APP

COMM NO:	60699B
ISSUE DATE:	SEPTEMBER 15, 2006
DESIGNED BY:	GHR
DRAWN BY:	LH
CHECKED BY:	DAP
SUBMITTED BY:	RFC

© HAYES, SEAY, MATTERN & MATTERN, INC., 2006. ALL RIGHTS RESERVED.

ARCHITECTURAL

FIRST FLOOR PLAN

A1

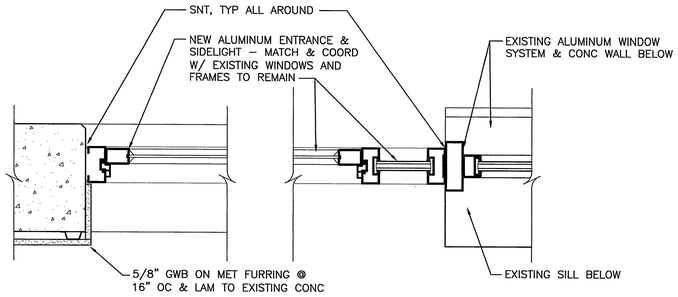

JAMB AT SILL WALL & SIDELIGHT

SCALE: 1–1/2"=1'–0"

1 / A1 A2

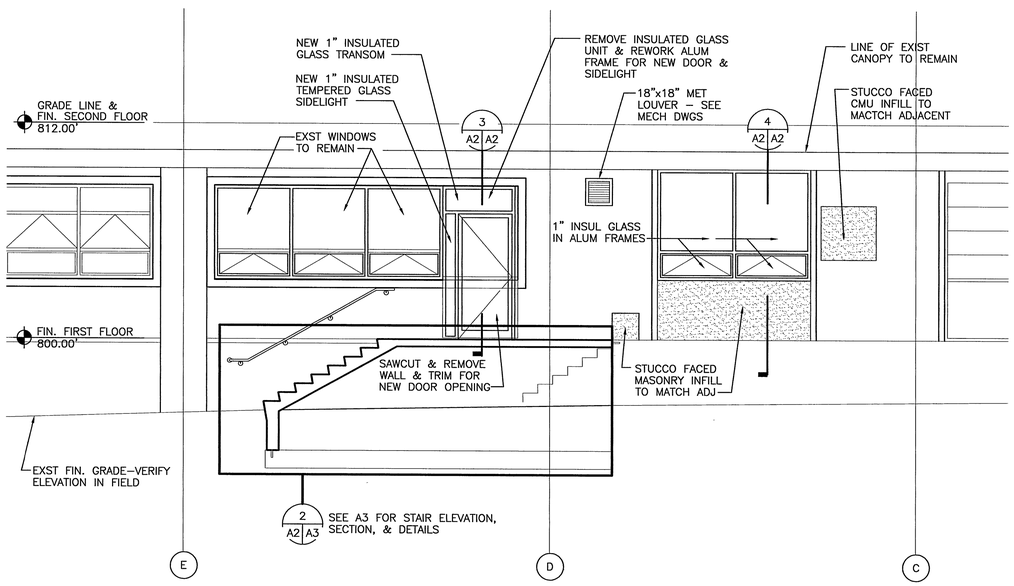

PARTIAL FIRST FLOOR NORTH ELEVATION

SCALE: 1/4" = 1'–0"

2 / A1 A2

1 1/2"=1'–0" 12" 9" 6" 3" 0 1'

1/4"=1'–0" 4' 2' 0 4' 8'

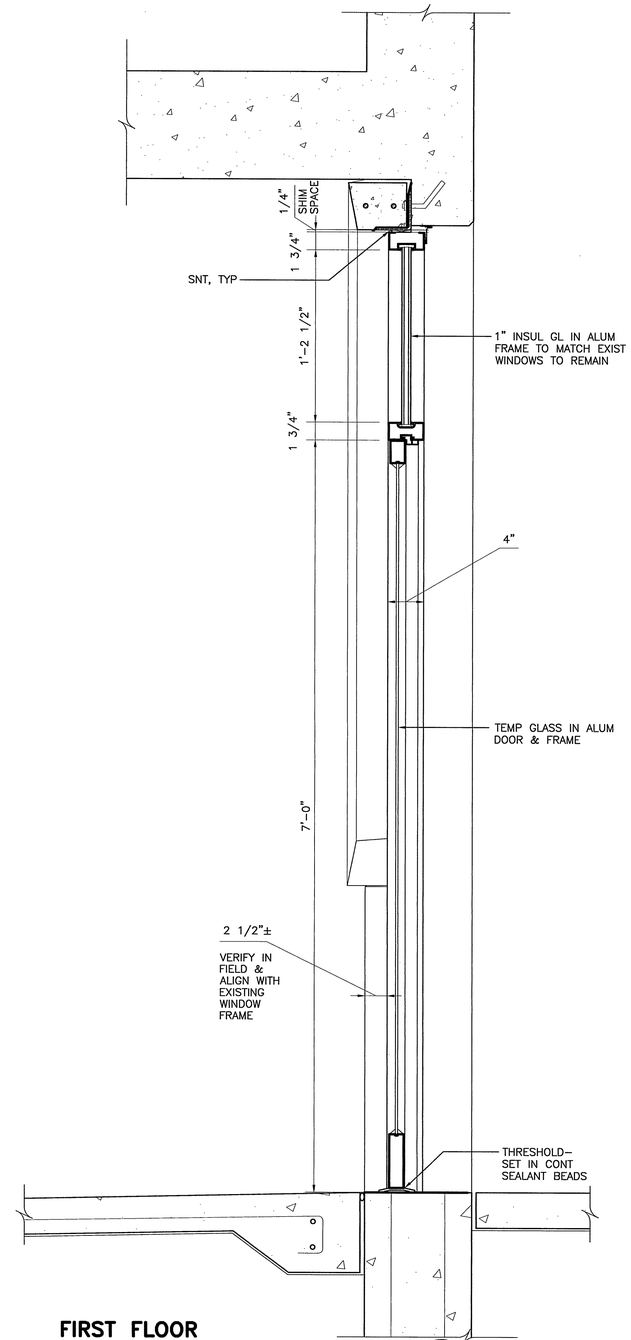

FIRST FLOOR DOOR SECTION

SCALE:1–1/2"=1'–0"

3 / A2 A2

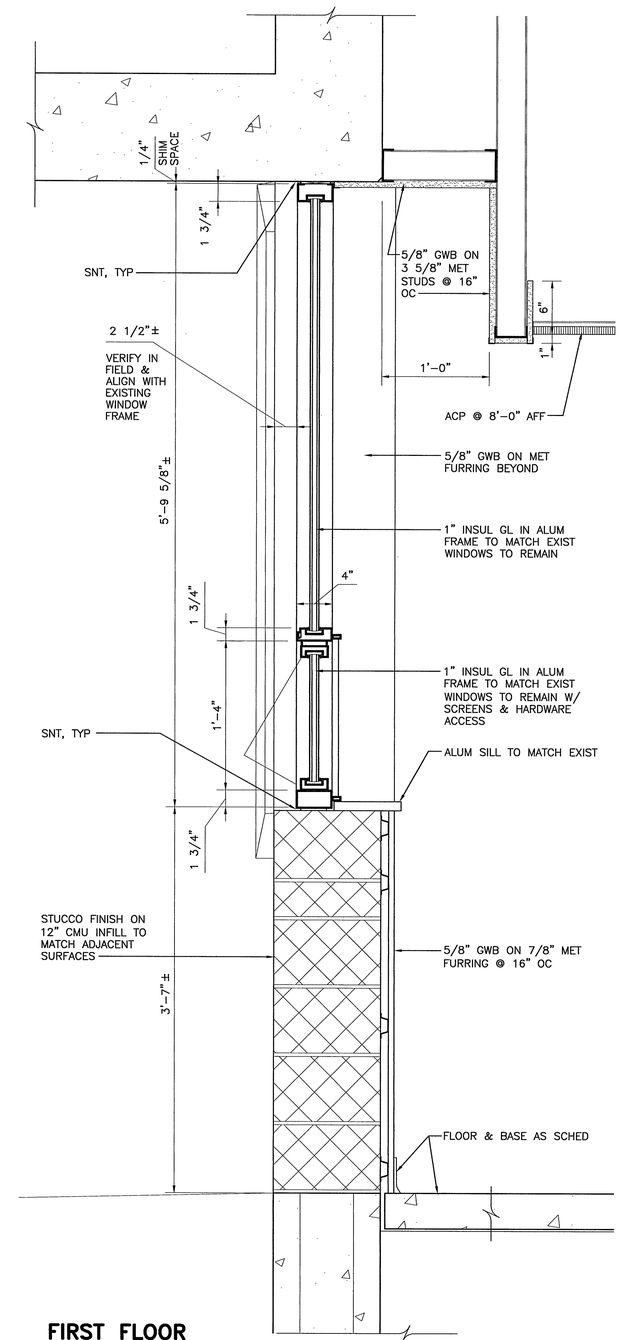

FIRST FLOOR INFILL WINDOW SECTION

SCALE: 1–1/2"=1'–0"

4 / A2 A2

SEALS

COMMONWEALTH OF VIRGINIA DAVID A. PUGH No. 007870 9.15.06 ARCHITECT — ARCHITECTURE ONLY

COMMONWEALTH OF VIRGINIA DAVID E. SELLARS No. 38318 9/15/06 PROFESSIONAL ENGINEER — STRUCTURAL ONLY

CONSULTANT

FIRST FLOOR RENOVATIONS COLLEGE HILL FILTRATION PLANT

CITY PROJECT NUMBER 05074–W

CITY OF LYNCHBURG, VIRGINIA

HSMM

ARCHITECTS ENGINEERS PLANNERS

HAYES, SEAY, MATTERN & MATTERN, INC.
1315 FRANKLIN ROAD
ROANOKE, VA 24016
(540) 857–3100 WWW.HSMM.COM

REV	DATE	DESCRIPTION	APP

COMM NO: 60699B
ISSUE DATE: SEPTEMBER 15, 2006
DESIGNED BY: GHR
DRAWN BY: LH
CHECKED BY: DAP
SUBMITTED BY: RFC

© HAYES, SEAY, MATTERN & MATTERN, INC., 2006. ALL RIGHTS RESERVED.

ARCHITECTURAL

SECTIONS & DETAILS

A2