ABERT WATER TREATMENT PLANT IMPROVEMENTS FOR THE DEPARTMENT OF UTILITIES CITY OF LYNCHBURG, VIRGINIA CITY PROJECT No. 05-039-W

LEGEND AND ABBREVIATIONS

	EXISTING	PROPOSED
SANITARY SEWER	— —SAN— —	—SAN—
WATER LINE	— — -W— —	—W—
FUEL OIL	— — -FO— —	
STORM DRAIN	— — -ST— —	— — — — —
UNDERGROUND TELEPHONE	— — UGT— —	
UNDERGROUND ELECTRIC	— — UGE— —	
OVERHEAD POWER	—/—/—	
SANITARY SEWER MANHOLE	○ MH	
STORM MANHOLE	○ MH	
DROP INLET	■ DI	
CATCH BASIN	■ CB	
HYDRANT	◇ FH	
WATER VALVE	⊗ WV	
WATER METER	WM	
LIGHT POLE	LP	
POWER POLE	PP	
EDGE OF WATER	— - — -	
FENCE LINE	—×—×—	
WOODS LINE		
TREE		
BUSH		
CONTOUR	— — - 890 — — -	

BM	BENCH MARK
BSMT.	BASEMENT
CL.	CLASS OR CENTERLINE
CMP	CORRUGATED METAL PIPE
CONC.	CONCRETE
DI	DUCTILE IRON, DROP INLET
EXIST.	EXISTING
INV.	INVERT
MH	MANHOLE
MIN.	MINIMUM
PVC	POLYVINYL CHLORIDE
RCP	REINFORCED CONCRETE PIPE
REV.	REVISION
RT.	RIGHT
SAN	SANITARY
ST	STORM
STA.	STATION
STD.	STANDARD
STD.	STANDARD
TBR	TO BE REMOVED
U.G.	UNDERGROUND

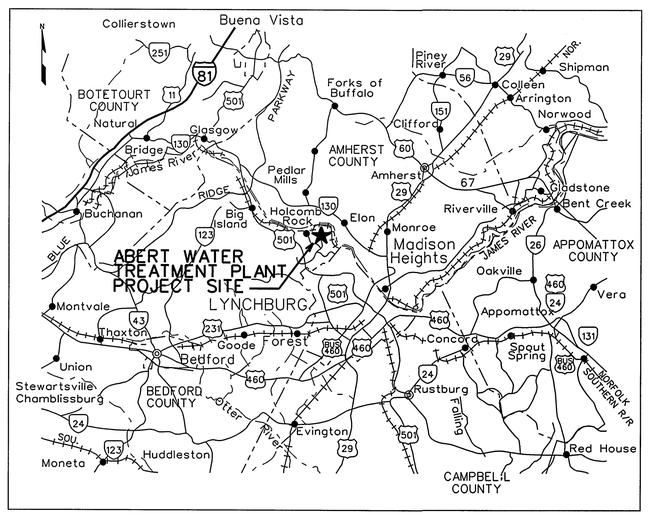

LOCATION MAP

0 2 5 10 MILES

SCALE: 1" = 5 MI.

LIST OF DRAWINGS

SHEET NO.	DRAWING NO.	REFERENCE	TITLE
1 OF 23	G-1	GENERAL	COVER SHEET, LOCATION MAP AND LIST OF DRAWINGS
2 OF 23	C-1	CIVIL	SITE PLAN
3 OF 23	C-2	CIVIL	DEMOLITION PLAN AND ELEVATIONS
4 OF 23	C-3	CIVIL	CHEMICAL ROOM PLAN AND ELEVATIONS
5 OF 23	C-4	CIVIL	CHEMICAL FEED PLAN
6 OF 23	C-5	CIVIL	EXTERIOR BULK STORAGE TANKS PLAN AND SECTION
7 OF 23	C-6	CIVIL	SECTION AND DETAILS
8 OF 23	C-7	CIVIL	DETAILS
9 OF 23	S-1	STRUCTURAL	PARTIAL FIRST FLOOR AND EXTERIOR PLAN-NEW WORK
10 OF 23	S-2	STRUCTURAL	DEMOLITION AND NEW WORK FLOOR PLANS
11 OF 23	S-3	STRUCTURAL	EXTERIOR ELEVATIONS
12 OF 23	S-4	STRUCTURAL	CROSS SECTIONS
13 OF 23	S-5	STRUCTURAL	SECTIONS AND DETAILS
14 OF 23	S-6	STRUCTURAL	FINISH & OPENING SCHEDULES AND DETAILS
15 OF 23	S-7	STRUCTURAL	CROSS SECTIONS
16 OF 23	M-1	MECHANICAL	DEMOLITION PLAN
17 OF 23	M-2	MECHANICAL	NEW WORK PLAN
18 OF 23	E-1	ELECTRICAL	LEGEND, ABBREVIATIONS, P & I DIAGRAM
19 OF 23	E-2	ELECTRICAL	PARTIAL ELECTRICAL SITE PLAN
20 OF 23	E-3	ELECTRICAL	DEMOLITION PLAN
21 OF 23	E-4	ELECTRICAL	NEW WORK PLAN-ELECTRICAL-LIGHTING & POWER
22 OF 23	E-5	ELECTRICAL	NEW WORK PLAN-INSTRUMENTATION
23 OF 23	E-6	ELECTRICAL	PANEL SCHEDULES

REV.	DATE	BY	APP.	DESCRIPTION

COMMONWEALTH OF VIRGINIA
THOMAS L. FITZGERALD
No. 036727
7/12/06
PROFESSIONAL ENGINEER

Wiley & Wilson
Employee-Owned
2310 Langhorne Road
Lynchburg, VA 24501-1547
www.wileywilson.com

BID SET

DESIGNED JLW	DRAWN JLW	PROJECT	ABERT WATER TREATMENT PLANT IMPROVEMENTS FOR THE CITY OF LYNCHBURG, VIRGINIA
CHECKED TLF	REVIEWED MKJ		
COMM. NO. 206076.00	FILE NO.	REFERENCE	GENERAL
CADD NO. 206076CS1.DGN		TITLE	COVER SHEET, LOCATION MAP, AND LIST OF DRAWINGS
DATE 7-12-06	DWG. NO. G-1	SHEET NO. 1 OF 23	REV. 0

NOTES:

1. CONTRACTOR SHALL PROVIDE DRAINAGE AND EROSION CONTROL TO STABILIZE THE TEMPORARY BULK CHEMICAL TANK STORAGE AREA. STORAGE TANKS SHALL BE ANCHORED IN PLACE AND PROVISIONS MADE TO RELOCATE TANKS TO PERMANENT LOCATION AS DIRECTED BY ENGINEER. REMOVE ALL ITEMS ASSOCIATED WITH THE TEMPORARY STORAGE AREA, REGRADE TO ORIGINAL SLOPES AND RESTORE THE DISTURBED AREAS TO GRASS WHEN TEMPORARY TANKS AND STORAGE AREAS ARE REMOVED.
2. ALL WORK SHALL BE DONE IN ACCORDANCE WITH THE LATEST STANDARDS AND SPECIFICATIONS OF THE VIRGINIA DEPARTMENT OF HEALTH (VDH), THE COUNTY OF BEDFORD, VIRGINIA, AND THE DEPARTMENT OF CONSERVATION AND RECREATIONS VIRGINIA EROSION AND SEDIMENT CONTROL HANDBOOK.
3. VEGETATIVE AND STRUCTURAL EROSION CONTROL DEVICES SHALL BE CONSTRUCTED AND MAINTAINED FOR ALL DISTURBED AREAS IN ACCORDANCE WITH LOCAL REQUIREMENTS AND THE LATEST EDITION OF THE VIRGINIA EROSION AND SEDIMENT CONTROL HANDBOOK. ALL EROSION CONTROL SILT FENCES SHALL BE INSTALLED BEFORE EXCAVATION BEGINS.
4. PROVIDE A MINIMUM OF 3 FEET OF COVER FOR UNDERGROUND WATER LINE PIPING.
5. CONTRACTOR SHALL COORDINATE ANY SHUT DOWNS OR INTERRUPTIONS OF UTILITIES OR SERVICES WITH THE WATER TREATMENT PLANT SUPERINTENDENT OR ENGINEER.

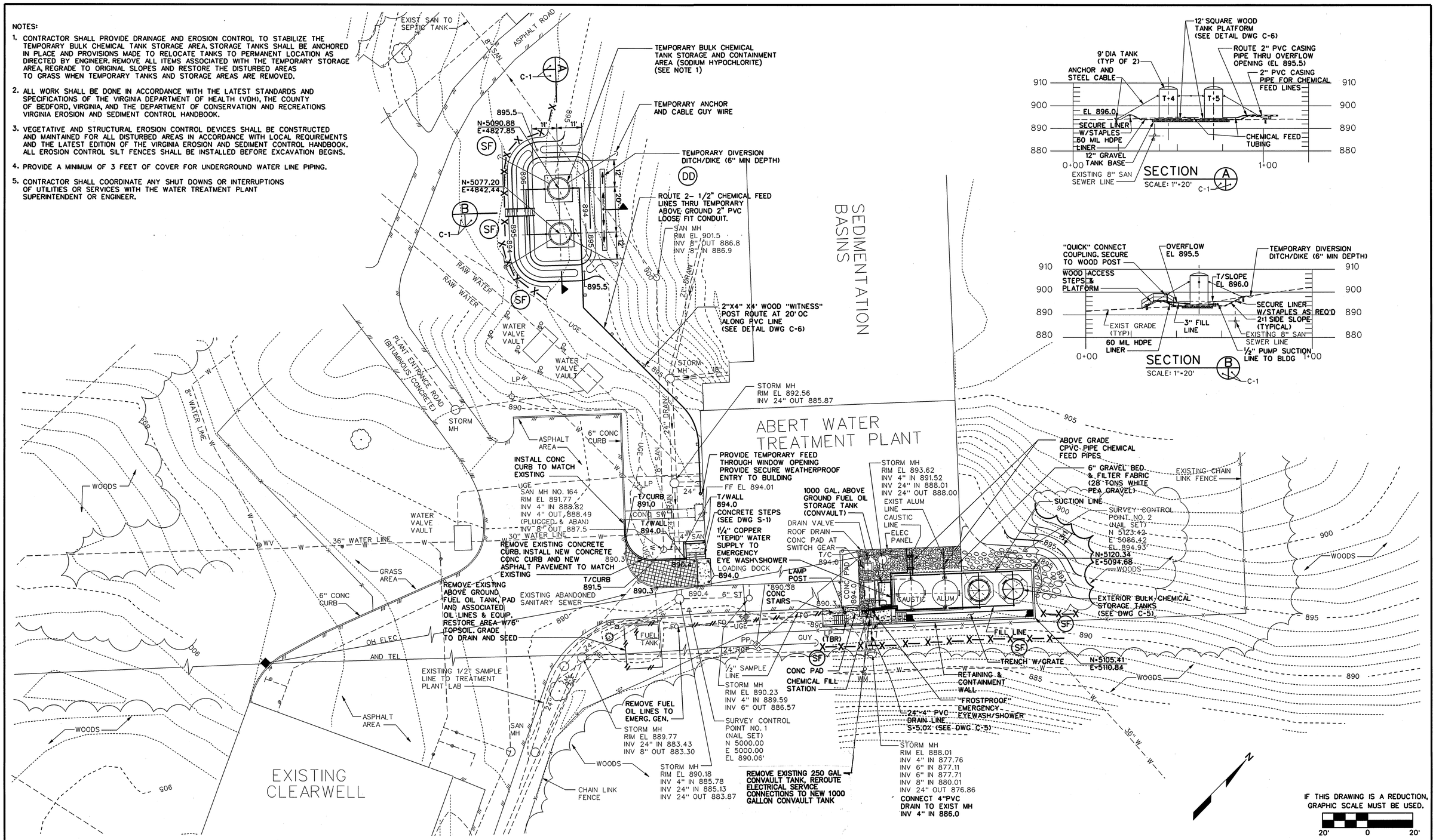

REV.	DATE	BY	APP.	DESCRIPTION

COMMONWEALTH OF VIRGINIA
THOMAS L. FITZGERALD
No. 036727
7/12/06
PROFESSIONAL ENGINEER

Wiley & Wilson
Employee-Owned
2310 Langhorne Road
Lynchburg, VA 24501-1547
www.wileywilson.com

BID SET

DESIGNED TLF/JLW	DRAWN JLW	PROJECT	ABERT WATER TREATMENT PLANT IMPROVEMENTS FOR THE CITY OF LYNCHBURG, VIRGINIA
CHECKED TLF	REVIEWED MKJ		
COMM. NO. 206076.00	FILE NO.	REFERENCE	CIVIL
CADD NO. 206076C01.DGN		TITLE	SITE PLAN
DATE 7-12-06		DWG. NO. C-1	SHEET NO. 2 OF 23 / REV. 0

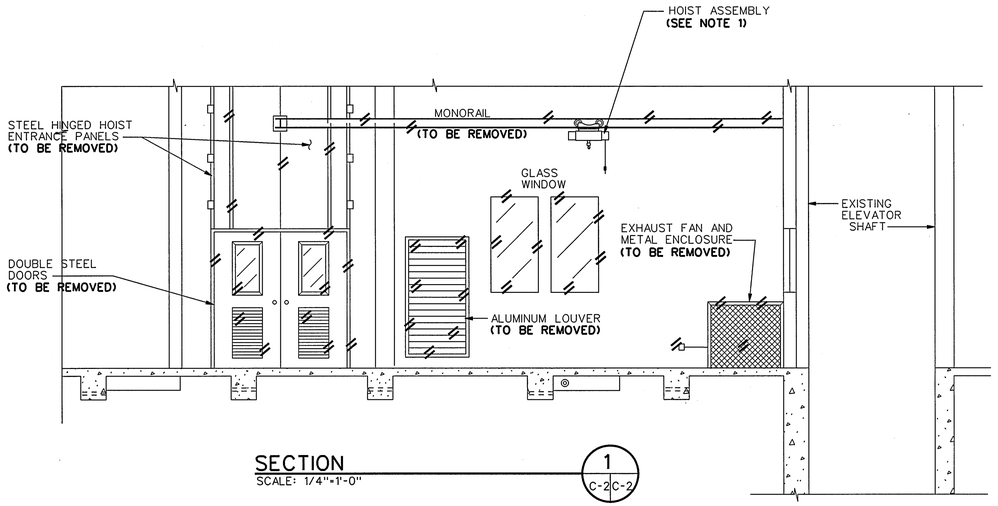

SECTION 1 C-2|C-2
SCALE: 1/4"=1'-0"

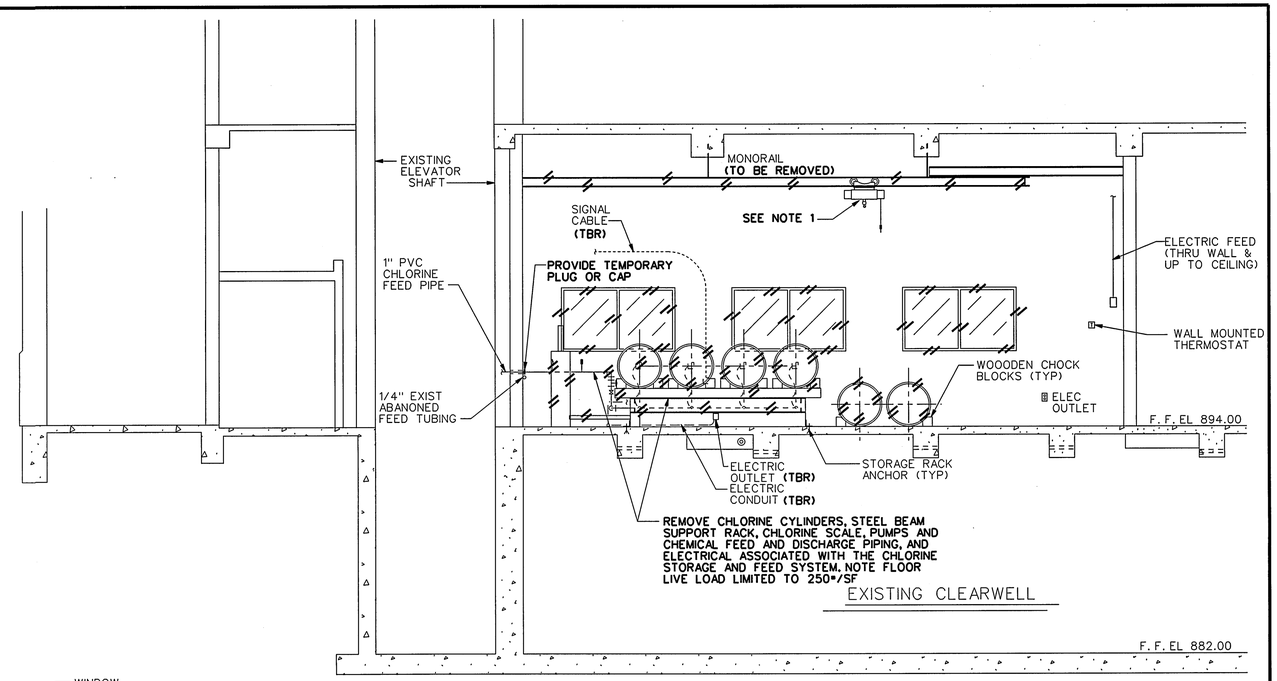

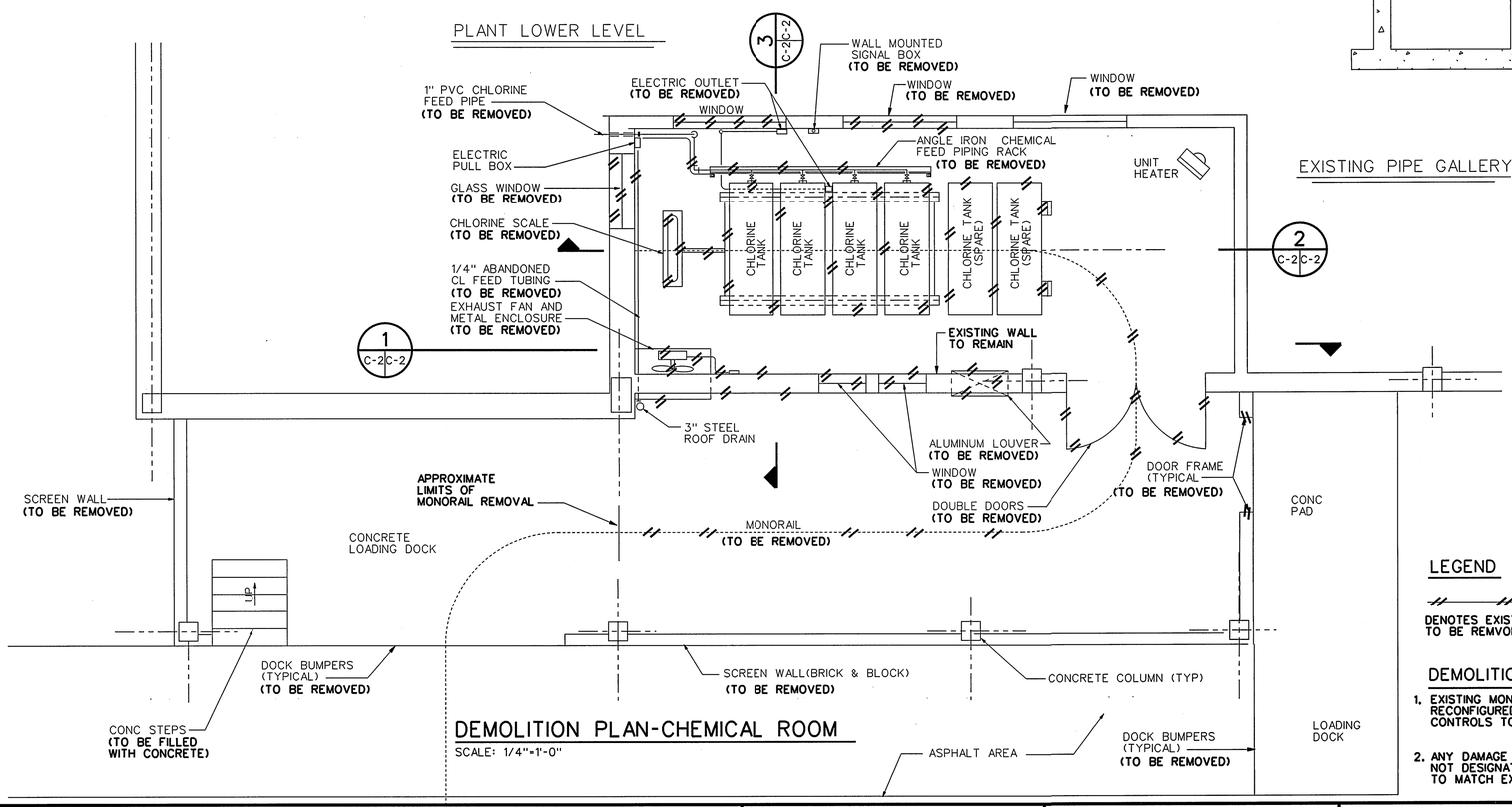

DEMOLITION PLAN-CHEMICAL ROOM
SCALE: 1/4"=1'-0"

SECTION 2 C-2|C-2
SCALE: 1/4"=1'-0"

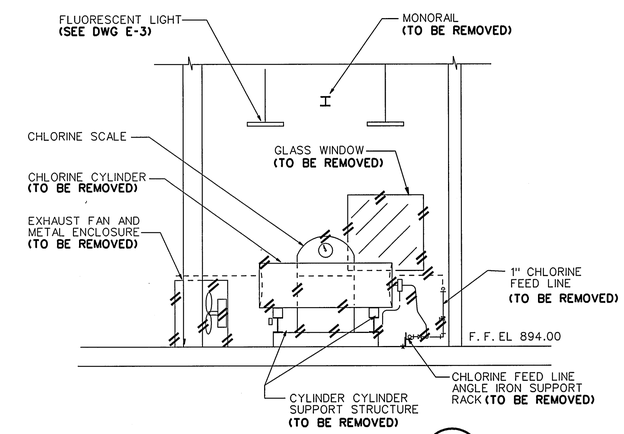

SECTION 3 C-2|C-2
SCALE: 1/4"=1'-0"

LEGEND

DENOTES EXISTING TO BE REMVOED

DEMOLITION NOTES

1. EXISTING MONORAIL, DRIVE MOTOR, AND HOIST ASSEMBLY SHALL BE RECONFIGURED TO OPERATE OVER LOADING DOCK AND ASPHALT DRIVE. CONTROLS TO BE LOCATED ON LOADING DOCK.
2. ANY DAMAGE TO EXISTING EQUIPMENT, STRUCTURES, OR MATERIALS NOT DESIGNATED TO BE REMOVED SHALL BE REPAIRED OR REPLACED TO MATCH EXISTING AS DIRECTED BY OWNER AS PART OF BASE CONTRACT.

IF THIS DRAWING IS A REDUCTION, GRAPHIC SCALE MUST BE USED.
5' 0 5'
1/4" = 1'-0"

REV.	DATE	BY	APP.	DESCRIPTION

COMMONWEALTH OF VIRGINIA
THOMAS L. FITZGERALD
No. 036727
7/12/06
PROFESSIONAL ENGINEER

Wiley & Wilson
Employee-Owned
2310 Langhorne Road
Lynchburg, VA 24501-1547
www.wileywilson.com

BID SET

DESIGNED TLF/JLW	DRAWN JLW	PROJECT	ABERT WATER TREATMENT PLANT IMPROVEMENTS FOR THE CITY OF LYNCHBURG, VIRGINIA
CHECKED TLF	REVIEWED MKJ		
COMM. NO. 206076.00	FILE NO.	REFERENCE	CIVIL
CADD NO. 206076D01.DGN		TITLE	DEMOLITION PLAN AND ELEVATIONS
DATE 7-12-06		DWG. NO. C-2	SHEET NO. 3 OF 23 / REV. 0

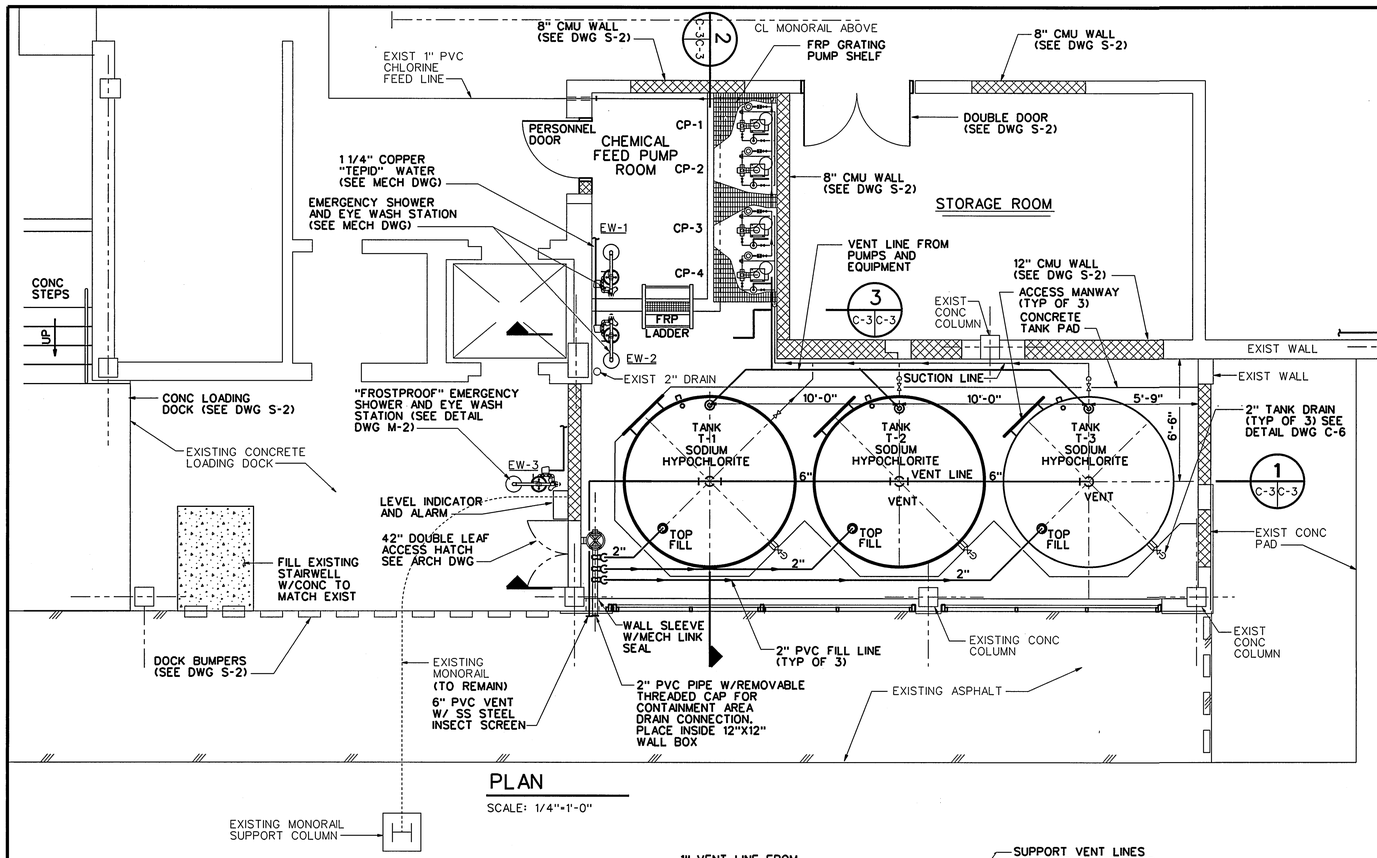

PLAN

SCALE: 1/4"=1'-0"

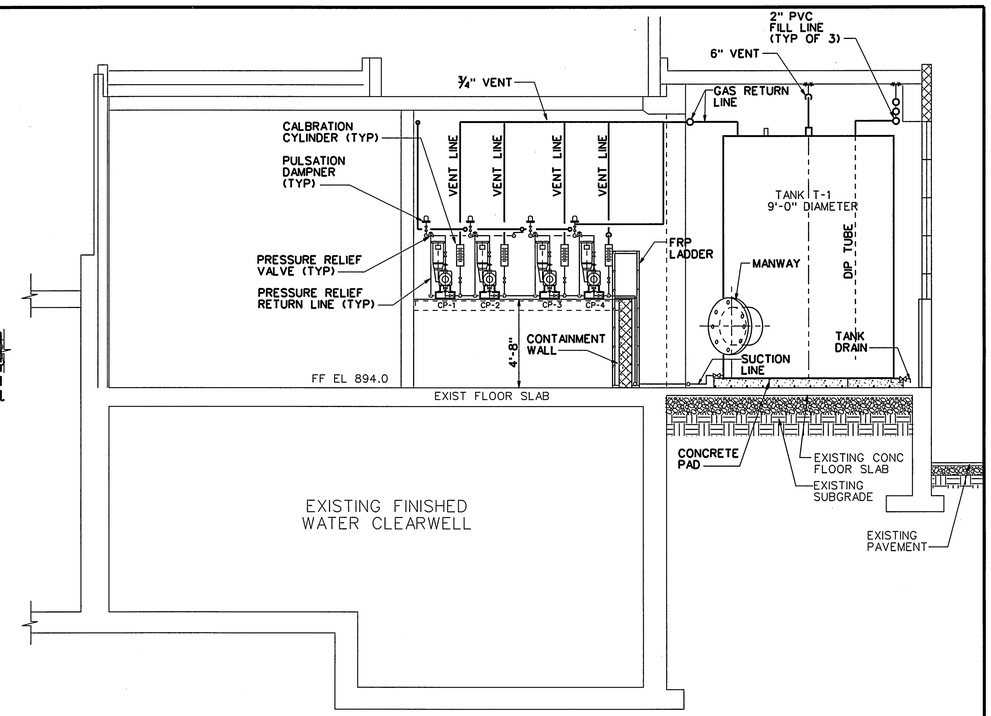

SECTION

SCALE: 1/4"=1'-0"

2 C-3 C-3

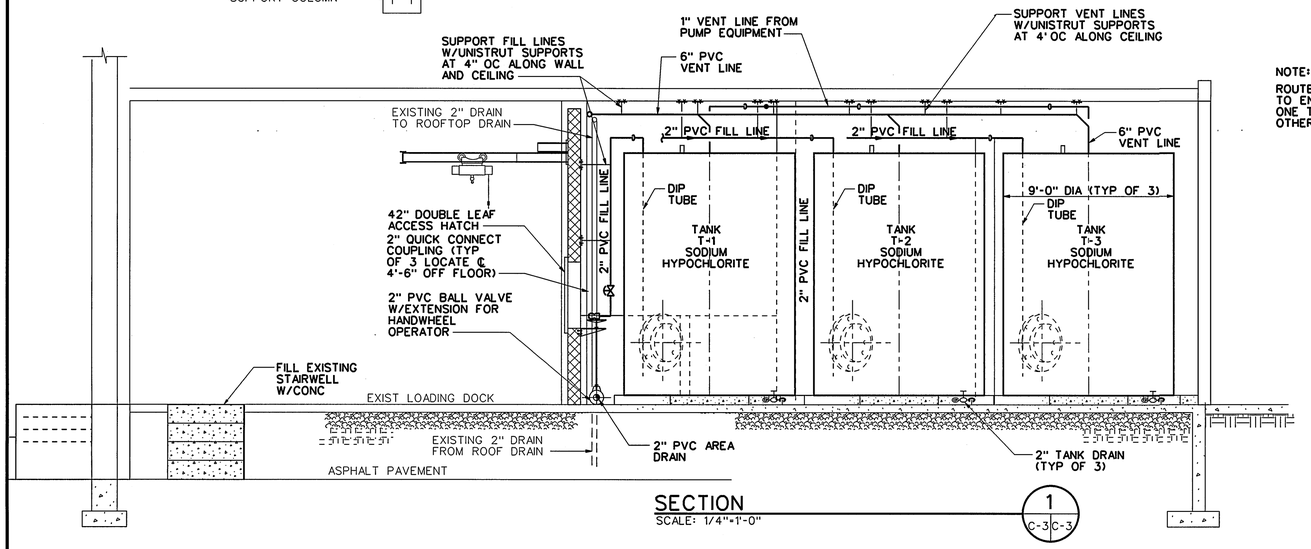

SECTION

SCALE: 1/4"=1'-0"

1 C-3 C-3

NOTE:

ROUTE ALL PIPING ON TANKS TO ENABLE REMOVAL OF ANY ONE TANK WITHOUT TAKING OTHER TANKS OUT OF SERVICE.

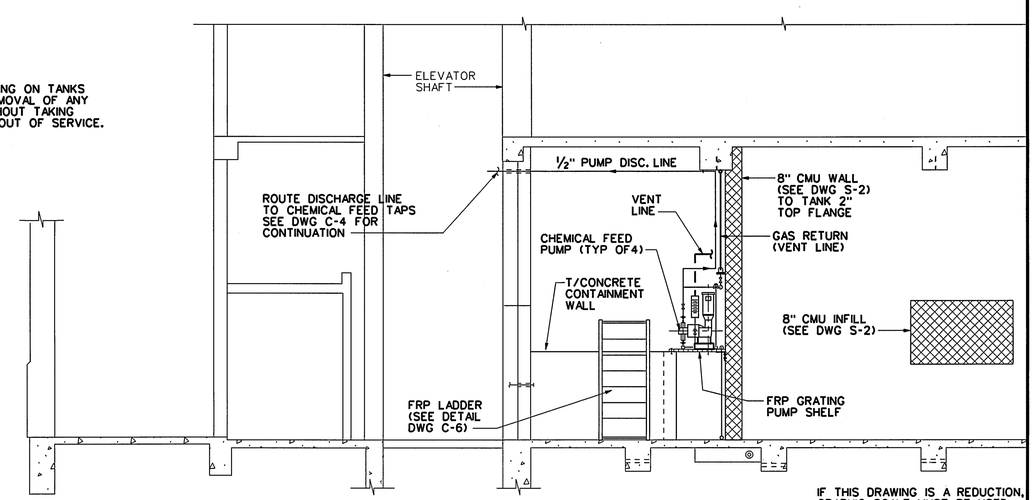

SECTION

SCALE: 1/4"=1'-0"

3 C-3 C-3

IF THIS DRAWING IS A REDUCTION, GRAPHIC SCALE MUST BE USED.

5' 0 5'

1/4" = 1'-0"

REV.	DATE	BY	APP.	DESCRIPTION

COMMONWEALTH OF VIRGINIA
THOMAS L. FITZGERALD
No. 036727
7/12/06
PROFESSIONAL ENGINEER

Wiley & Wilson
Employee-Owned
2310 Langhorne Road
Lynchburg, VA 24501-1547
www.wileywilson.com

BID SET

DESIGNED TLF/JLW	DRAWN JLW	PROJECT	ABERT WATER TREATMENT PLANT IMPROVEMENTS FOR THE CITY OF LYNCHBURG, VIRGINIA
CHECKED TLF	REVIEWED MKJ		
COMM. NO. 206076.00	FILE NO.	REFERENCE	CIVIL
CADD NO. 206076C10.DGN		TITLE	CHEMICAL ROOM PLAN AND ELEVATIONS
DATE 7-12-06	DWG. NO. C-3	SHEET NO. 4 OF 23	REV. 0

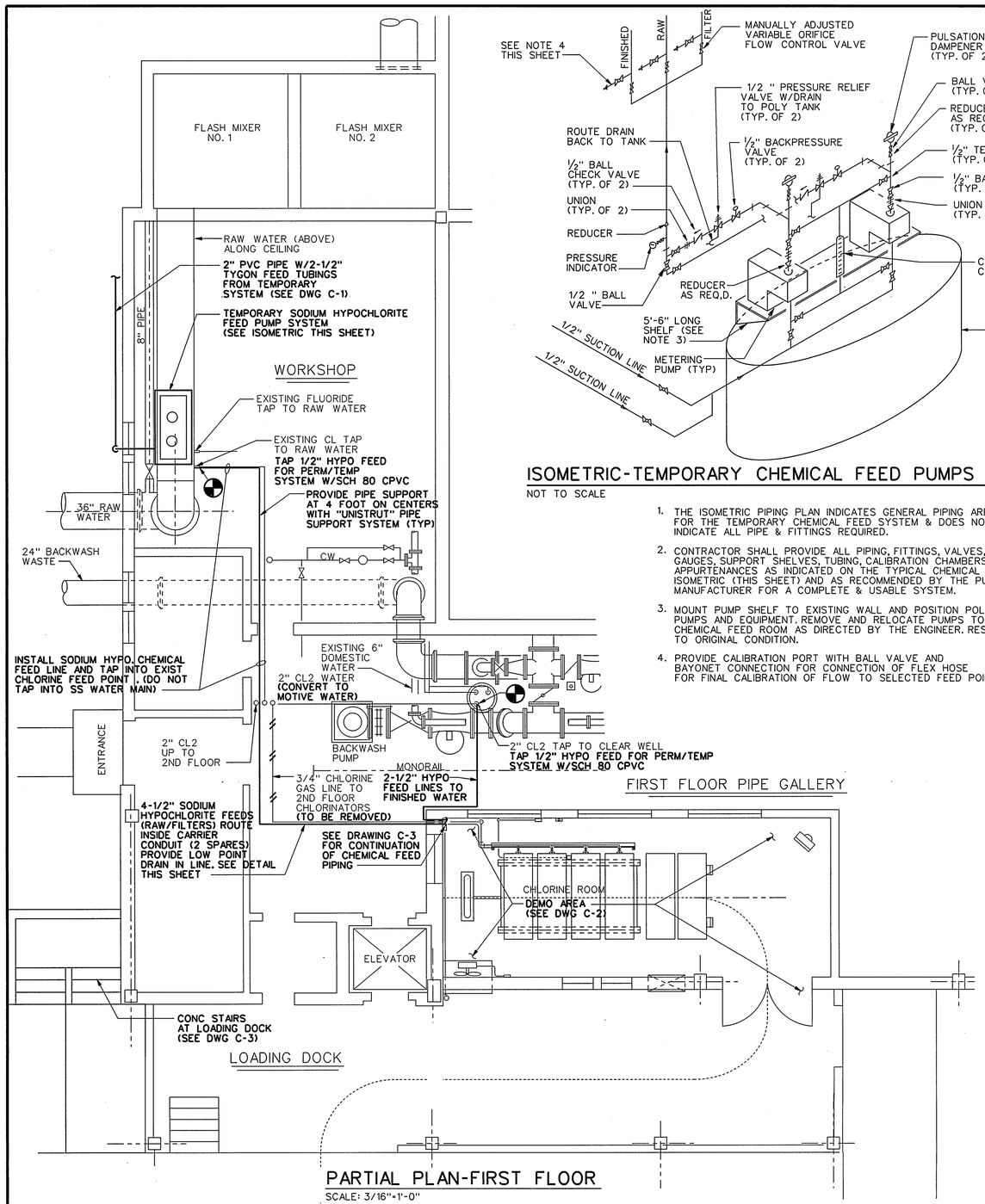

PARTIAL PLAN-FIRST FLOOR

SCALE: 3/16"=1'-0"

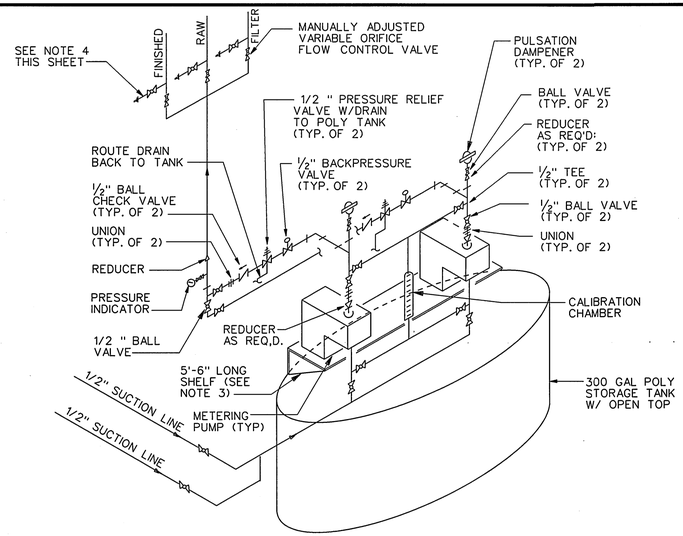

ISOMETRIC-TEMPORARY CHEMICAL FEED PUMPS

NOT TO SCALE

1. THE ISOMETRIC PIPING PLAN INDICATES GENERAL PIPING ARRANGEMENTS FOR THE TEMPORARY CHEMICAL FEED SYSTEM & DOES NOT NECESSARILY INDICATE ALL PIPE & FITTINGS REQUIRED.
2. CONTRACTOR SHALL PROVIDE ALL PIPING, FITTINGS, VALVES, UNIONS GAUGES, SUPPORT SHELVES, TUBING, CALIBRATION CHAMBERS, AND APPURTENANCES AS INDICATED ON THE TYPICAL CHEMICAL FEED PUMP ISOMETRIC (THIS SHEET) AND AS RECOMMENDED BY THE PUMP MANUFACTURER FOR A COMPLETE & USABLE SYSTEM.
3. MOUNT PUMP SHELF TO EXISTING WALL AND POSITION POLY TANK BELOW PUMPS AND EQUIPMENT. REMOVE AND RELOCATE PUMPS TO THE NEW CHEMICAL FEED ROOM AS DIRECTED BY THE ENGINEER. RESTORE WALL TO ORIGINAL CONDITION.
4. PROVIDE CALIBRATION PORT WITH BALL VALVE AND BAYONET CONNECTION FOR CONNECTION OF FLEX HOSE FOR FINAL CALIBRATION OF FLOW TO SELECTED FEED POINT.

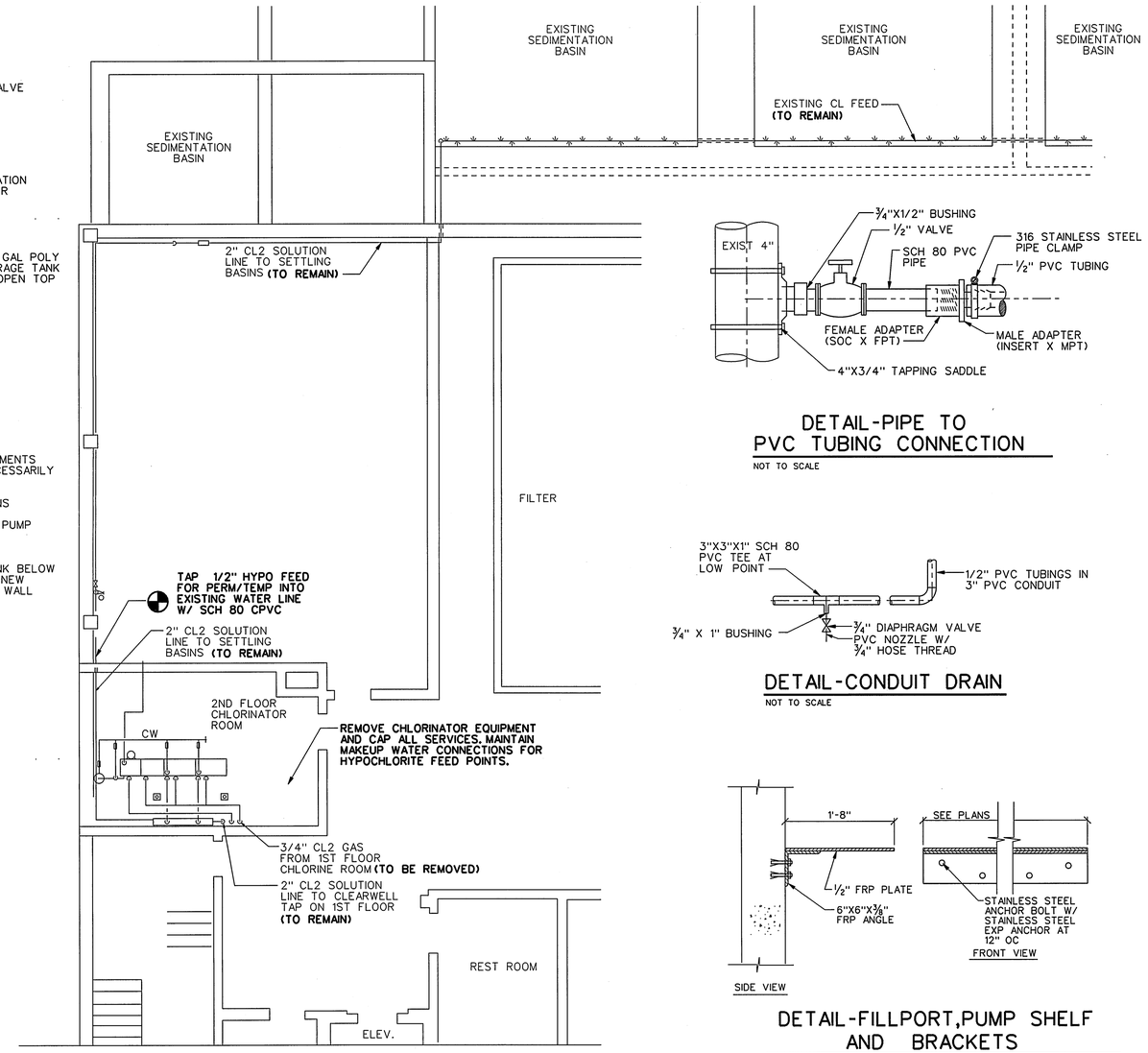

PARTIAL PLAN-SECOND FLOOR

SCALE: 3/16"=1'-0"

DETAIL-PIPE TO PVC TUBING CONNECTION

NOT TO SCALE

DETAIL-CONDUIT DRAIN

NOT TO SCALE

DETAIL-FILLPORT,PUMP SHELF AND BRACKETS

NOT TO SCALE

LEGEND

DENOTES EXISTING TO BE REMOVED

CONNECTION POINT NEW TO EXISTING

IF THIS DRAWING IS A REDUCTION, GRAPHIC SCALE MUST BE USED.

5' 0 5' 10'

3/16" = 1'-0"

REV.	DATE	BY	APP.	DESCRIPTION

COMMONWEALTH OF VIRGINIA
THOMAS L. FITZGERALD
No. 036727
7/12/06
PROFESSIONAL ENGINEER

Wiley & Wilson
Employee-Owned
2310 Langhorne Road
Lynchburg, VA 24501-1547
www.wileywilson.com

BID SET

DESIGNED JLW	DRAWN JLW	PROJECT	ABERT WATER TREATMENT PLANT IMPROVEMENTS FOR THE CITY OF LYNCHBURG, VIRGINIA
CHECKED TLF	REVIEWED MKJ		
COMM. NO. 206076.00	FILE NO.	REFERENCE	CIVIL
CADD NO. 206076C04.DGN		TITLE	CHEMICAL FEED PLAN
DATE 7-12-06	DWG. NO. C-4	SHEET NO. 5 OF 23	REV. 0

NOTES:

1. PROVIDE HEAT TRACE AND INSULATION FOR THE CAUSTIC TANK AND THE CAUSTIC LINES PER SPECIFICATIONS.
2. FIELD VERIFY LOCATION OF THE EXISTING 1/2" SAMPLE LINE AND RELOCATE AS REQUIRED PRIOR TO CONSTRUCTION.
3. SEAL INTERIOR OF CONTAINMENT AREA INCLUDING FLOOR SLAB W/THOROSEAL CEMENTITIOUS COATING MODIFIED WITH ACRYL 60 OR APPROVED EQUAL.
4. THE YARD PIPING AS SHOWN IS FOR A PROPOSED LAYOUT. THE CONTRACTOR SHALL PROVIDE ALL PIPE, FITTINGS, AND HARDWARE FOR A COMPLETE AND USABLE SYSTEM.
5. CAUTION!!! BURIED UNDERGROUND UTILITIES LOCATED IN THE AREAS OF EXISTING CONCRETE PADS, LOADING DOCK, AND HEAT PUMPS. FIELD VERIFY LOCATION BEFORE BEGINNING ANY EXCAVATION OR TRENCHING WORK.

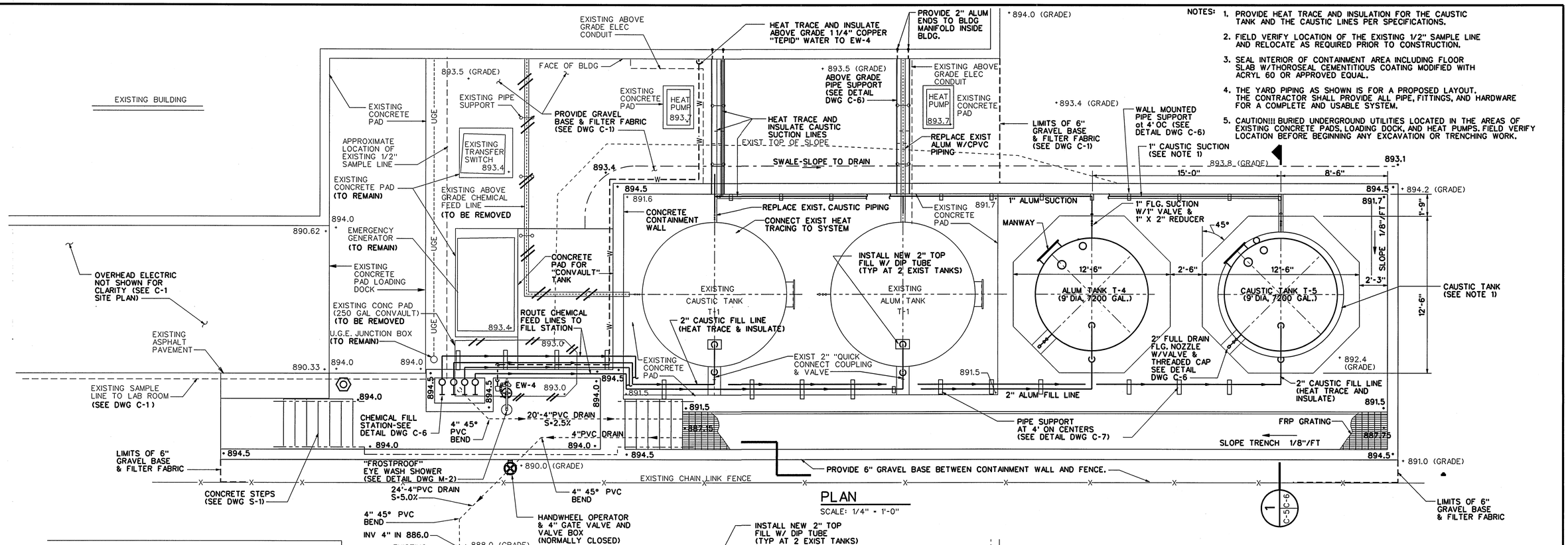

PLAN

SCALE: 1/4" = 1'-0"

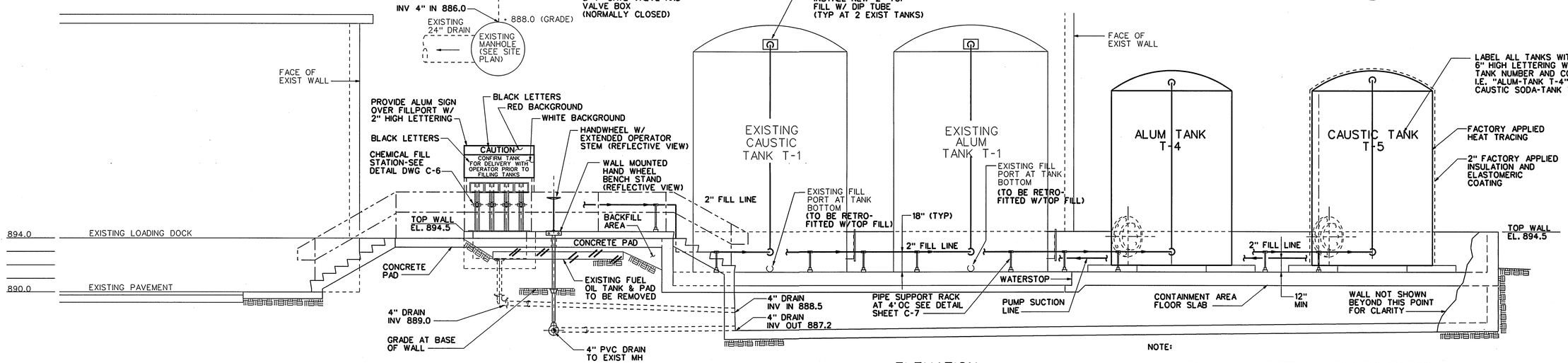

ELEVATION

SCALE: 1/4" = 1'-0"

NOTE:

1. PROVIDE NEW HOUSEKEEPING PAD TO MATCH NEW TANK CONFIGURATION AS PART OF RETROFIT TO EXISTING TANK. EXISTING TANKS ARE TO BE REMOVED TO ANOTHER AREA OF THE CONCRETE SLAB AND REINSTALLED PER SPECIFICATIONS.
2. CONTRACTOR SHALL INSTALL NEW TANKS AND PIPING PRIOR TO TAKING EXISTING PIPING OUT OF SERVICE.

IF THIS DRAWING IS A REDUCTION, GRAPHIC SCALE MUST BE USED.

5' 0 5'

1/4" = 1'-0"

REV.	DATE	BY	APP.	DESCRIPTION

COMMONWEALTH OF VIRGINIA
THOMAS L. FITZGERALD
No. 036727
7/12/06
PROFESSIONAL ENGINEER

Wiley & Wilson
Employee-Owned
2310 Langhorne Road
Lynchburg, VA 24501-1547
www.wileywilson.com

BID SET

DESIGNED JLW	DRAWN JLW	PROJECT: ABERT WATER TREATMENT PLANT IMPROVEMENTS FOR THE CITY OF LYNCHBURG, VIRGINIA
CHECKED TLF	REVIEWED MKJ	
COMM. NO. 206076.00	FILE NO.	REFERENCE: CIVIL
CADD NO. 206076C05.DGN		TITLE: EXTERIOR BULK STORAGE TANKS PLAN AND SECTION
DATE 7-12-06	DWG. NO. C-5	SHEET NO. 6 OF 23 — REV. 0

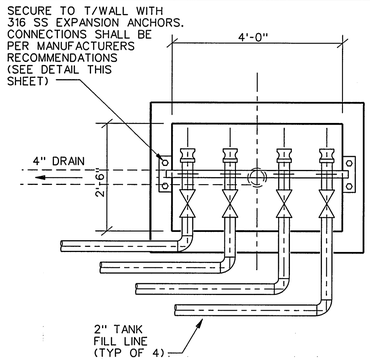

PLAN

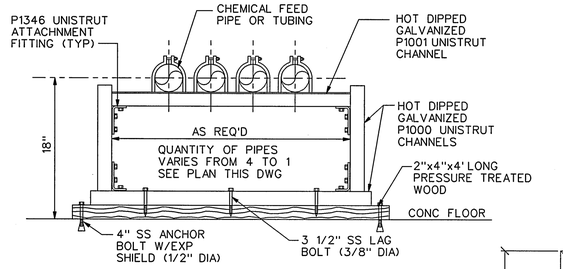

FLOOR MOUNTED PIPE SUPPORT

NOT TO SCALE

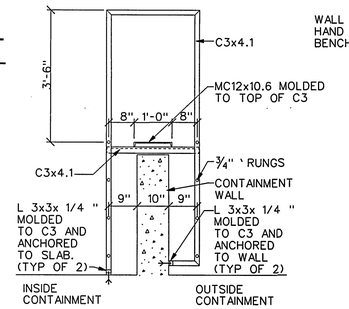

DETAIL-FRP LADDER & PLATFORM

NOT TO SCALE

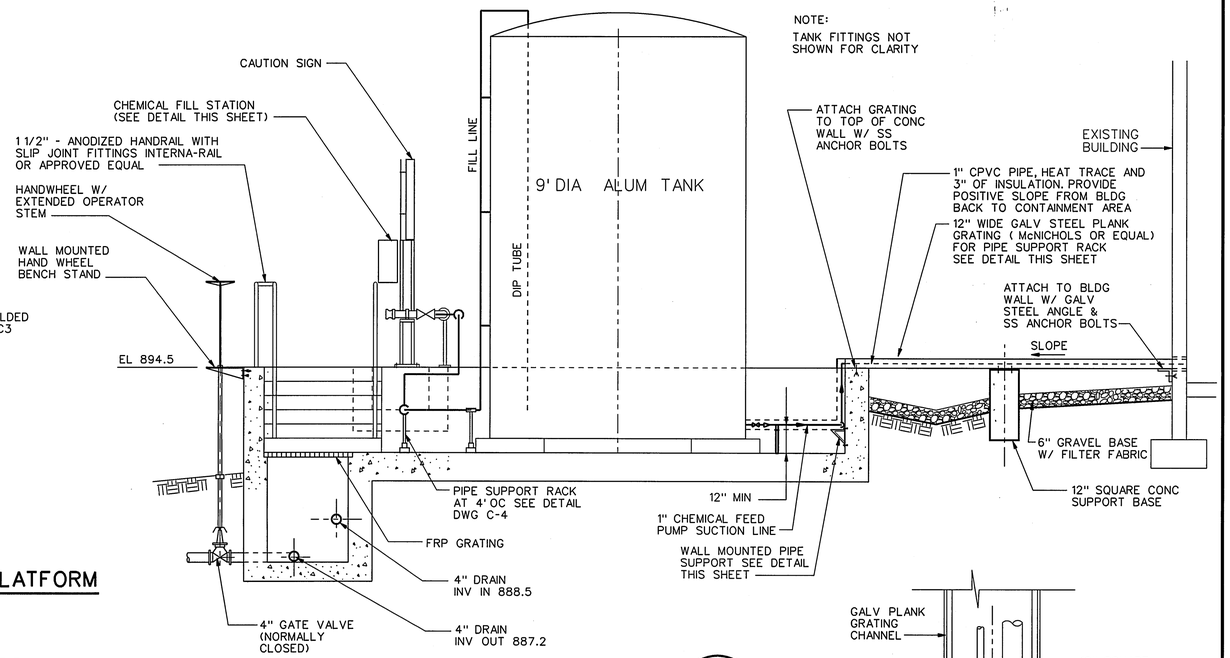

SECTION

SCALE: 3/8"=1'-0"

1 (C-5 | C-6)

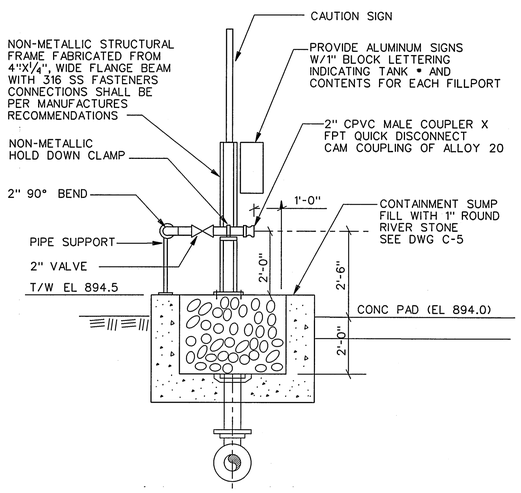

SECTION

DETAIL - FILL STATION

NOT TO SCALE

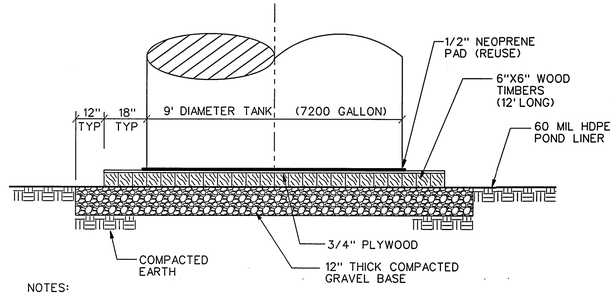

NOTES:

1. SECURE PLYWOOD TO 6"X6" TIMBERS WITH 2" WOOD SCREWS AT 12" ON CENTER DISASSEMBLE AND REMOVE AFTER TANKS ARE RELOCATED TO PERMANENT INSTALLATION OUTSIDE OF THE WATER TREATMENT PLANT.
2. UTILIZE NEW CAUSTIC AND ALUM TANKS AS TEMPORARY HYPOCHLORITE STORAGE
3. CABLE AND ANCHOR TANKS TO GROUND TO PREVENT OVERTURNING.

DETAIL - TEMPORARY TANK PLATFORM

NOT TO SCALE

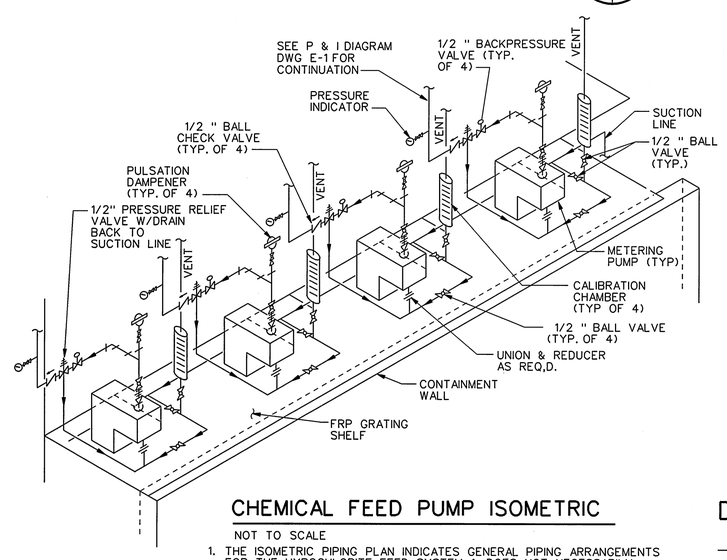

CHEMICAL FEED PUMP ISOMETRIC

NOT TO SCALE

1. THE ISOMETRIC PIPING PLAN INDICATES GENERAL PIPING ARRANGEMENTS FOR THE HYPOCHLORITE FEED SYSTEM & DOES NOT NECESSARILY INDICATE ALL PIPE & FITTINGS REQUIRED.
2. CONTRACTOR SHALL PROVIDE ALL PIPING, FITTINGS, VALVES, UNIONS GAUGES, SUPPORT SHELVES, TUBING, CALIBRATION CHAMBERS, AND APPURTENANCES AS INDICATED ON THE TYPICAL CHEMICAL FEED PUMP ISOMETRIC (THIS SHEET) AND AS RECOMMENDED BY THE PUMP MANUFACTURER FOR A COMPLETE & USABLE SYSTEM.

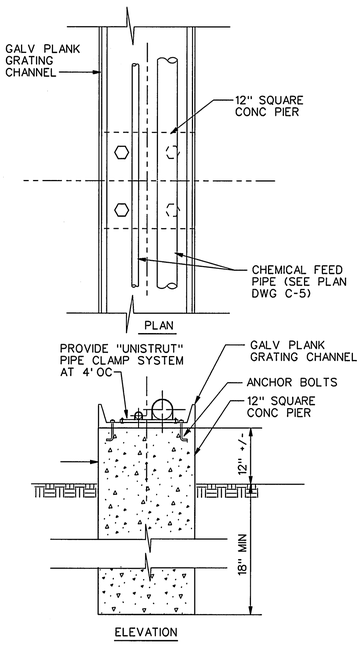

DETAIL - CHEMICAL FEED SUPPORT RACK

NOT TO SCALE

IF THIS DRAWING IS A REDUCTION, GRAPHIC SCALE MUST BE USED.

12"6"0 1' 2' 3' 4' 5' 6'

3/8" = 1'-0"

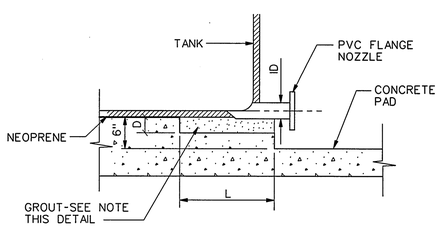

DIMENSIONS

ID	L	W	D
1"	12"	8"	2"
2"	12"	10"	2 1/2"
3"	12"	12"	2 1/2"

W=NOTCH WIDTH

NOTE:
PROVIDE NOTCH IN CONCRETE PAD PRIOR TO TANK SET UP. PROVIDE GROUT IN TANK NOTCH AFTER TANK IS SET UP.

DETAIL - FULL DRAIN NOZZLE NOTCH

NOT TO SCALE

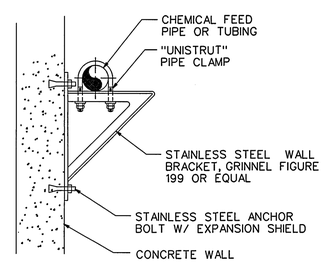

WALL MOUNTED PIPE SUPPORT

NOT TO SCALE

REV.	DATE	BY	APP.	DESCRIPTION

COMMONWEALTH OF VIRGINIA
THOMAS L. FITZGERALD
No. 036727
PROFESSIONAL ENGINEER

Wiley & Wilson
Employee-Owned
2310 Langhorne Road
Lynchburg, VA 24501-1547
www.wileywilson.com

BID SET

DESIGNED TLF/JLW	DRAWN JLW	PROJECT	ABERT WATER TREATMENT PLANT IMPROVEMENTS FOR THE CITY OF LYNCHBURG, VIRGINIA
CHECKED TLF	REVIEWED MKJ		
COMM. NO. 206076.00	FILE NO.	REFERENCE	CIVIL
CADD NO. 206076C06.DGN		TITLE	SECTION AND DETAILS
DATE 7-12-06	DWG. NO. C-6	SHEET NO. 7 OF 23	REV. 0

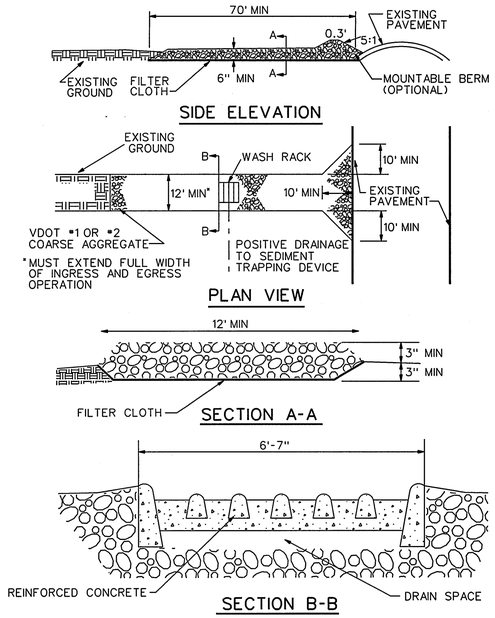

CONSTRUCTION ENTRANCE (CE)

NOT TO SCALE

CONTRACTOR SHALL PROVIDE CONSTRUCTION ENTRANCE AT ALL PAVEMENT ACCESS POINTS. ALL DIRT AND DEBRIS SHALL BE REMOVED FROM PAVEMENT DAILY.

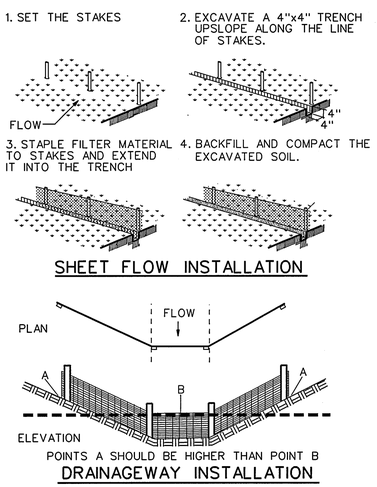

CONSTRUCTION OF A SILT FENCE (WITHOUT WIRE SUPPORT) (SF)

NOT TO SCALE

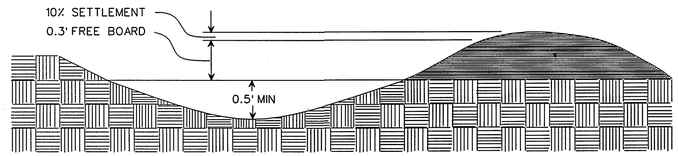

TYPICAL PARABOLIC DIVERSION

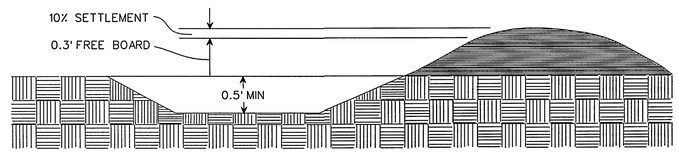

TYPICAL TRAPEZOIDAL DIVERSION

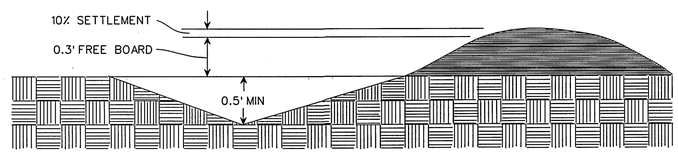

TYPICAL "V" DIVERSION

TEMPORARY DIVERSION DIKE (DD)

NOT TO SCALE

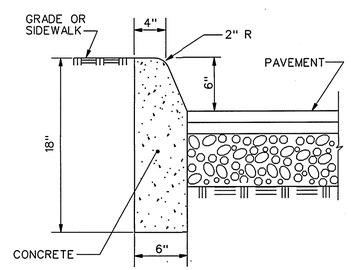

CURB DETAIL - MATCH EXISTING

NOT TO SCALE

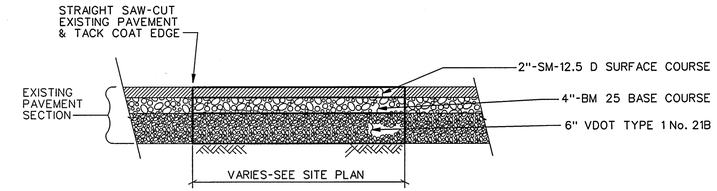

TYPICAL PAVEMENT SECTION

NOT TO SCALE

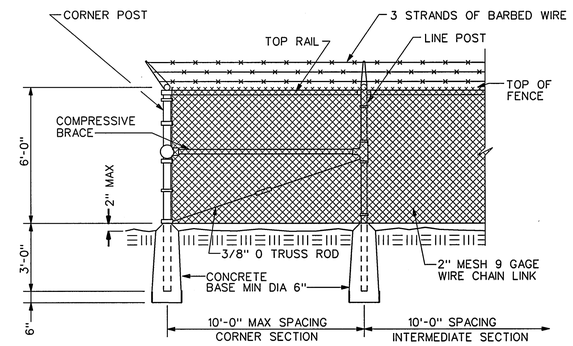

NOTE: MIN 28-DAY CONCRETE COMPRESSIVE STRENGTH SHALL BE 2500 PSI

CHAIN LINK FENCE DETAIL

NOT TO SCALE

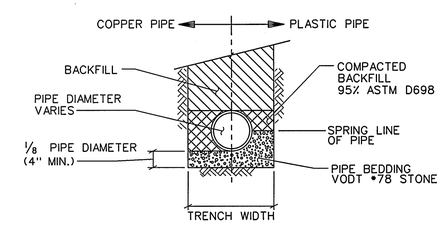

PIPE BEDDING DETAIL

NOT TO SCALE

REV.	DATE	BY	APP.	DESCRIPTION

COMMONWEALTH OF VIRGINIA
THOMAS L. FITZGERALD
No. 036727
7/12/06
PROFESSIONAL ENGINEER

Wiley & Wilson
Employee-Owned
2310 Langhorne Road
Lynchburg, VA 24501-1547
www.wileywilson.com

BID SET

DESIGNED JLW	DRAWN JLW	PROJECT	ABERT WATER TREATMENT PLANT IMPROVEMENTS FOR THE CITY OF LYNCHBURG, VIRGINIA
CHECKED TLF	REVIEWED MKJ		
COMM. NO. 206076.00	FILE NO.	REFERENCE	CIVIL
CADD NO. 206076C07.DGN		TITLE	DETAILS
DATE 7-12-06	DWG. NO. C-7	SHEET NO. 8 OF 23	REV. 0

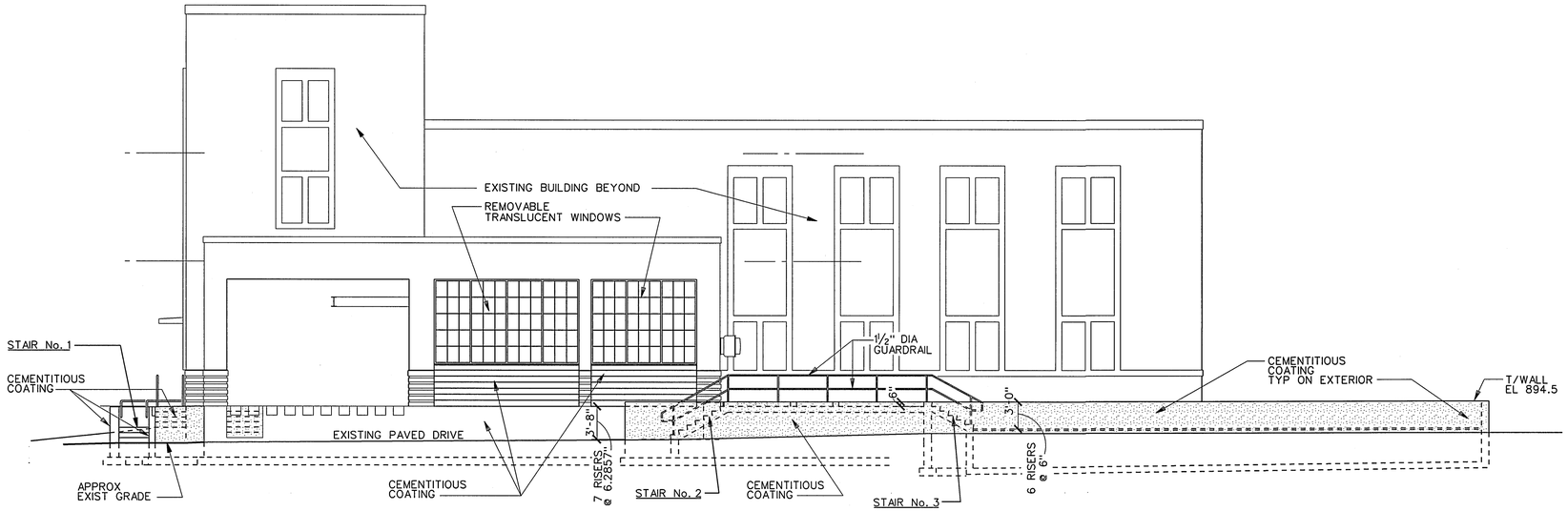

PARTIAL EXTERIOR ELEVATION - NEW WORK

SCALE: 1/8" = 1'-0"

1 S-1 | S-1

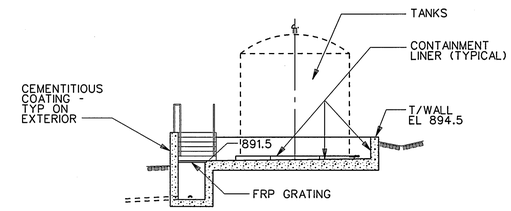

SECTION AT TANK CONTAINMENT

SCALE: 1/8"=1'-0"

2 S-1 | S-1

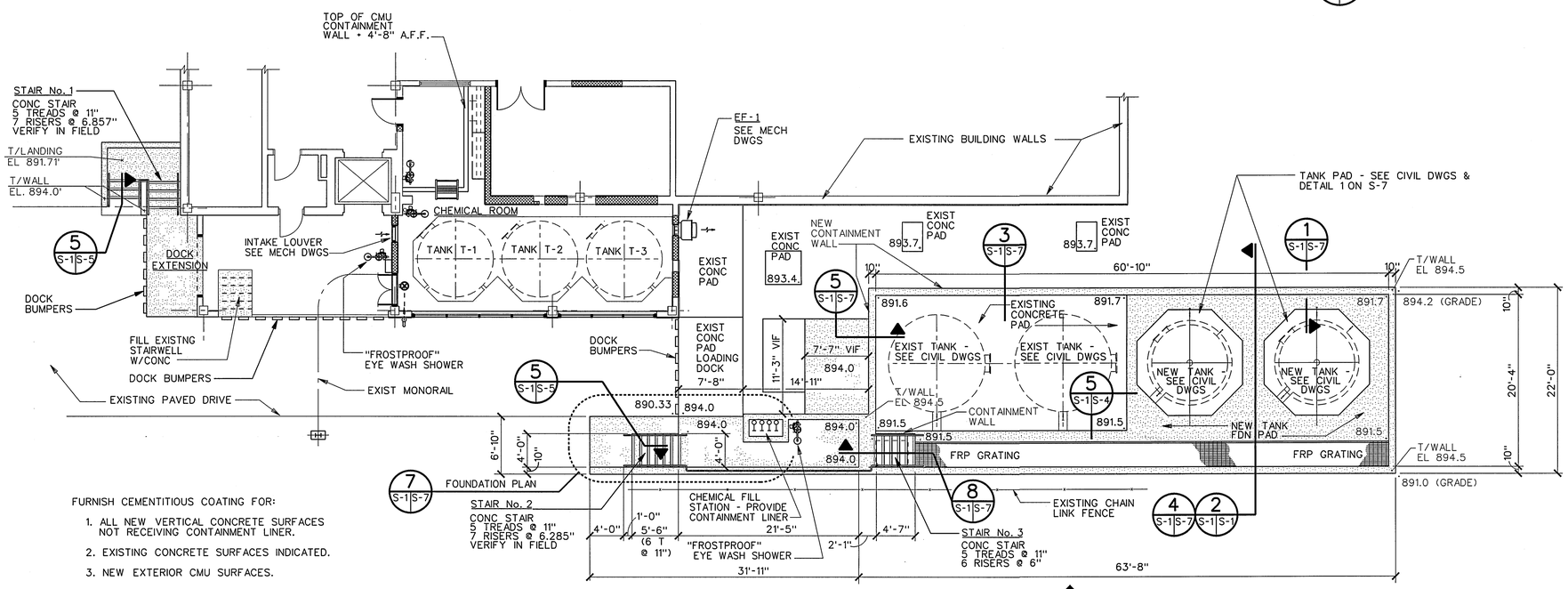

FURNISH CEMENTITIOUS COATING FOR:

1. ALL NEW VERTICAL CONCRETE SURFACES NOT RECEIVING CONTAINMENT LINER.
2. EXISTING CONCRETE SURFACES INDICATED.
3. NEW EXTERIOR CMU SURFACES.

STAIR WALLS AND FOOTINGS SHALL BE 8" CONCRETE w/ #5's @ 12" E.W.
1'-8" x 10" FOOTING w/ 3 #5's AND #5's @ 12" UNO.

PARTIAL FIRST FLOOR AND EXTERIOR PLAN - NEW WORK

SCALE: 1/8" = 1'-0"

REV.	DATE	BY	APP.	DESCRIPTION

COMMONWEALTH OF VIRGINIA — SCOTT E. SORENSEN — No. 11535 — PROFESSIONAL ENGINEER

Wiley & Wilson
Employee-Owned
2310 Langhorne Road
Lynchburg, VA 24501-1547
www.wileywilson.com

BID SET

DESIGNED SES	DRAWN AEL	PROJECT	ABERT WATER TREATMENT PLANT IMPROVEMENTS FOR THE CITY OF LYNCHBURG, VIRGINIA
CHECKED SES	REVIEWED TLF		
COMM. NO. 206076.00	FILE NO.	REFERENCE	STRUCTURAL
CADD NO. 206076s01.dgn		TITLE	PARTIAL FIRST FLOOR AND EXTERIOR PLAN - NEW WORK
DATE 7-12-06		DWG. NO. S-1	SHEET NO. 9 OF 23 — REV. 0

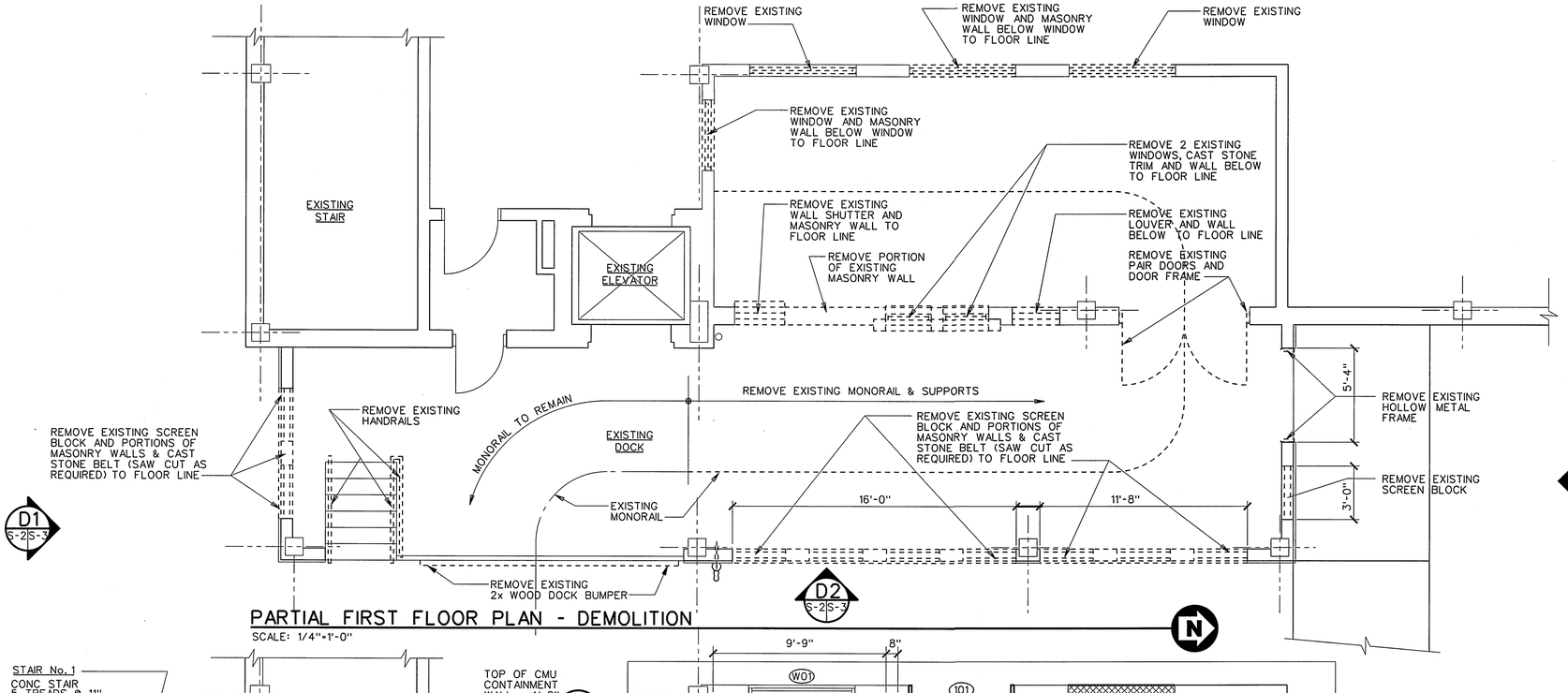

PARTIAL FIRST FLOOR PLAN - DEMOLITION

SCALE: 1/4"=1'-0"

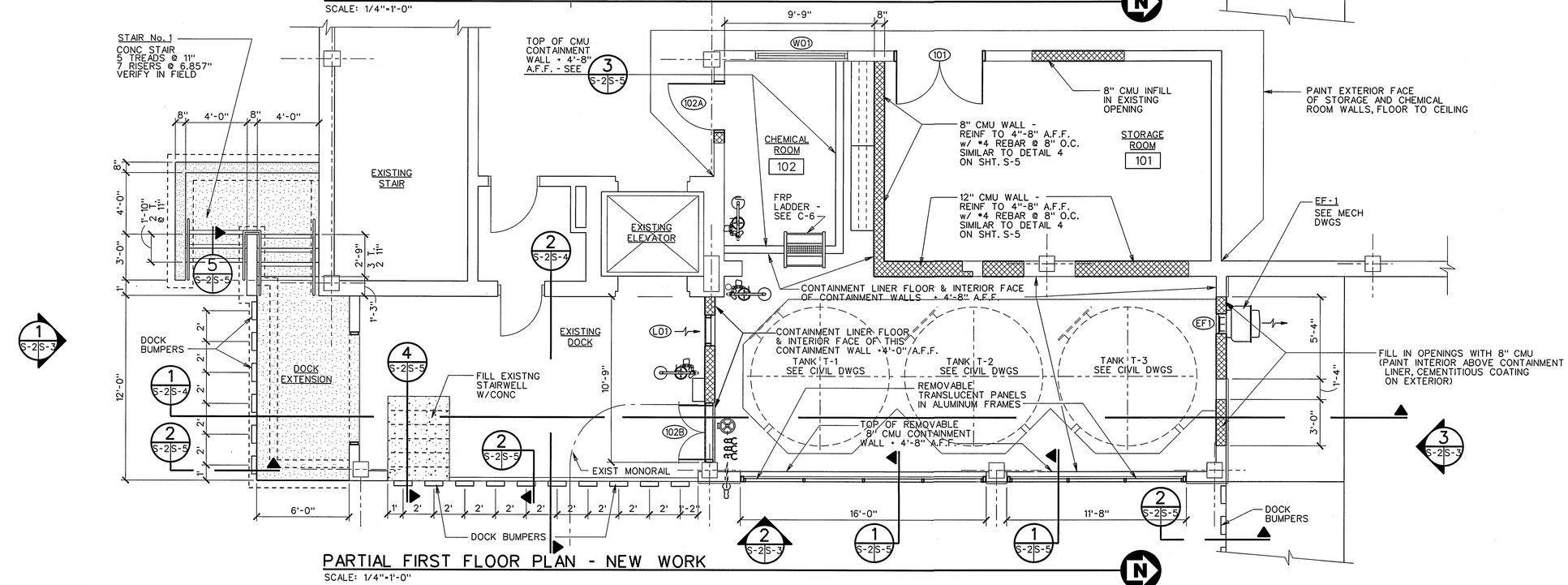

PARTIAL FIRST FLOOR PLAN - NEW WORK

SCALE: 1/4"=1'-0"

CODE: 2003 VIRGINIA CONSTRUCTION CODE

ROOM		OCCUPANCY
101	STORAGE	S-1
102	CHEMICAL STORAGE (CORROSIVE)	H-4

REQUIRED SEPARATION: 1 - HOUR

CONSTRUCTION TYPE: NON-COMBUSTIBLE II-B

SPRINKLER: EXISTING NON-SPRINKLERED BUILDING, ROOM No. 102 TO BE SPRINKLERED

REV.	DATE	BY	APP.	DESCRIPTION

COMMONWEALTH OF VIRGINIA — SCOTT A. GOENSEN — No. 18312 — PROFESSIONAL ENGINEER

Wiley & Wilson
Employee-Owned
2310 Langhorne Road
Lynchburg, VA 24501-1547
www.wileywilson.com

BID SET

DESIGNED SES	DRAWN AEL	PROJECT	ABERT WATER TREATMENT PLANT IMPROVEMENTS FOR THE CITY OF LYNCHBURG, VIRGINIA
CHECKED SES	REVIEWED TLF		
COMM. NO. 206076.00	FILE NO.	REFERENCE	STRUCTURAL
CADD NO. 206076s02.dgn		TITLE	DEMOLITION AND NEW WORK FLOOR PLANS
DATE 7-12-06	DWG. NO. S-2	SHEET NO. 10 OF 23	REV. 0

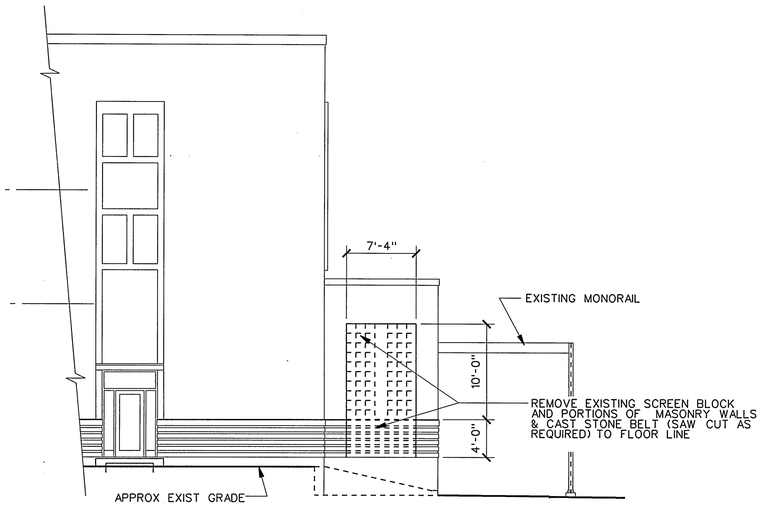

SOUTH ELEVATION - DEMOLITION (D1 / S-2 | S-3)
SCALE: 1/8"=1'-0"

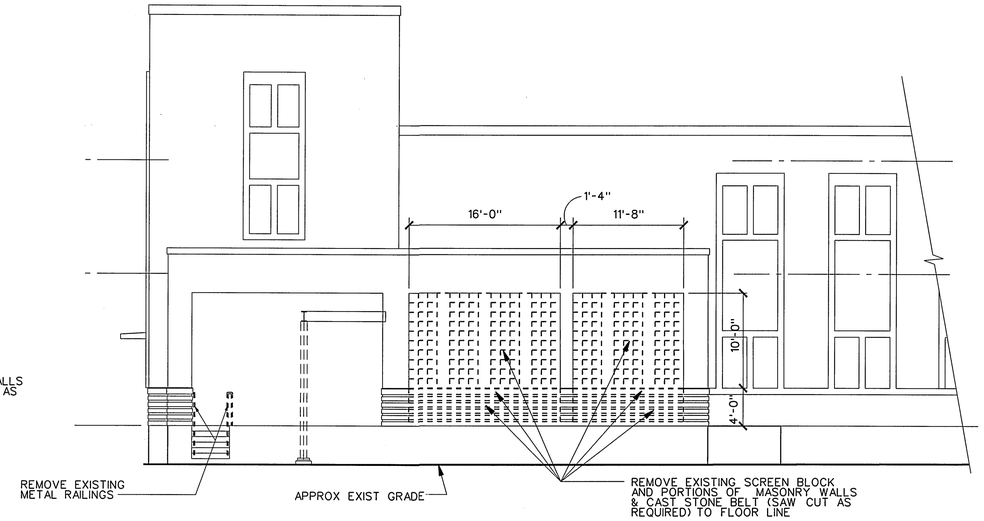

EAST ELEVATION - DEMOLITION (D2 / S-2 | S-3)
SCALE: 1/8"=1'-0"

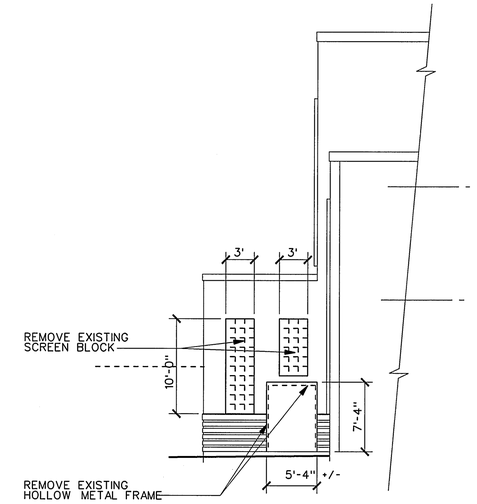

NORTH ELEVATION - DEMOLITION (D3 / S-2 | S-3)
SCALE: 1/8"=1'-0"

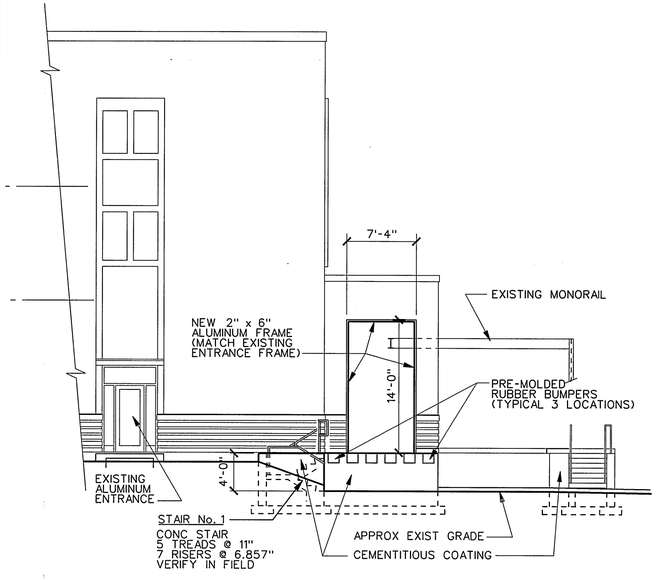

SOUTH ELEVATION - NEW WORK (1 / S-2 | S-3)
SCALE: 1/8"=1'-0"

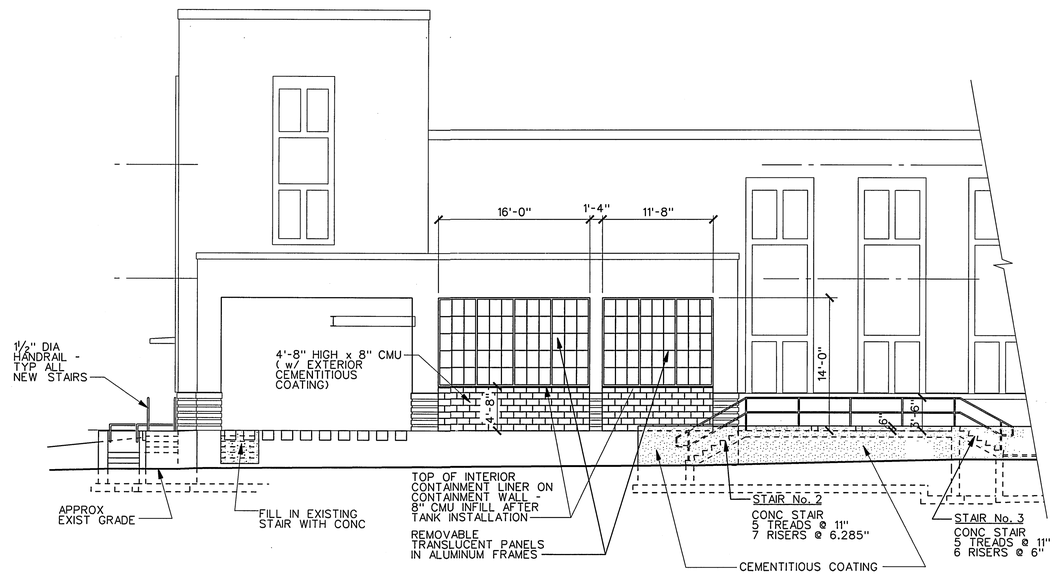

EAST ELEVATION - NEW WORK (2 / S-2 | S-3)
SCALE: 1/8"=1'-0"

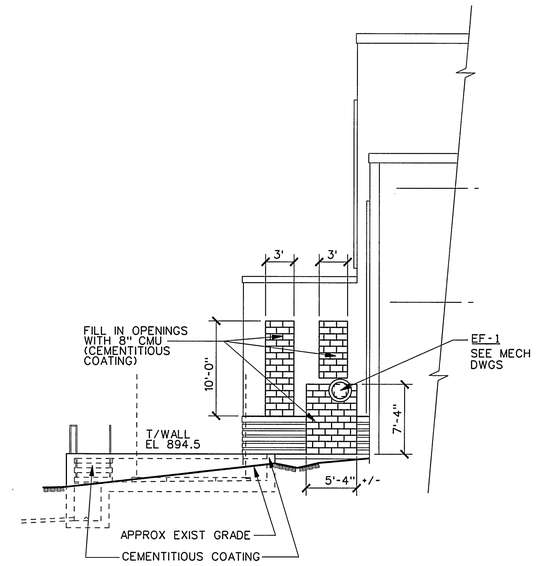

NORTH ELEVATION - NEW WORK (3 / S-2 | S-3)
SCALE: 1/8"=1'-0"

REV.	DATE	BY	APP.	DESCRIPTION

COMMONWEALTH OF VIRGINIA — SCOTT E. SOMMERS — No. 019394 — PROFESSIONAL ENGINEER

Wiley & Wilson
Employee-Owned
2310 Langhorne Road
Lynchburg, VA 24501-1547
www.wileywilson.com

BID SET

DESIGNED SES	DRAWN AEL	PROJECT	ABERT WATER TREATMENT PLANT IMPROVEMENTS FOR THE CITY OF LYNCHBURG, VIRGINIA
CHECKED SES	REVIEWED TLF		
COMM. NO. 206076.00	FILE NO.	REFERENCE	STRUCTURAL
CADD NO. 206076s03.dgn		TITLE	EXTERIOR ELEVATIONS
DATE 7-12-06	DWG. NO. S-3	SHEET NO. 11 OF 23	REV. 0

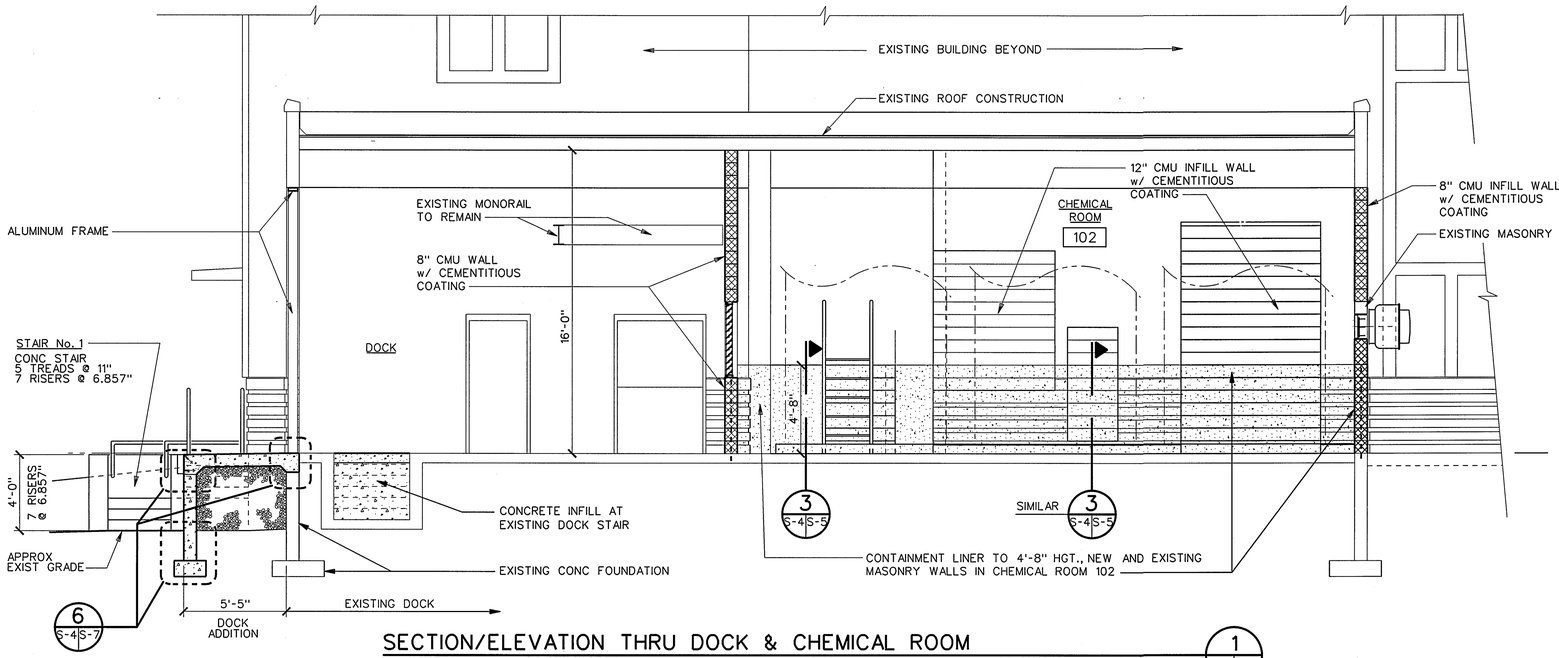

SECTION/ELEVATION THRU DOCK & CHEMICAL ROOM

SCALE: 1/4" = 1'-0"

1 S-2 S-4

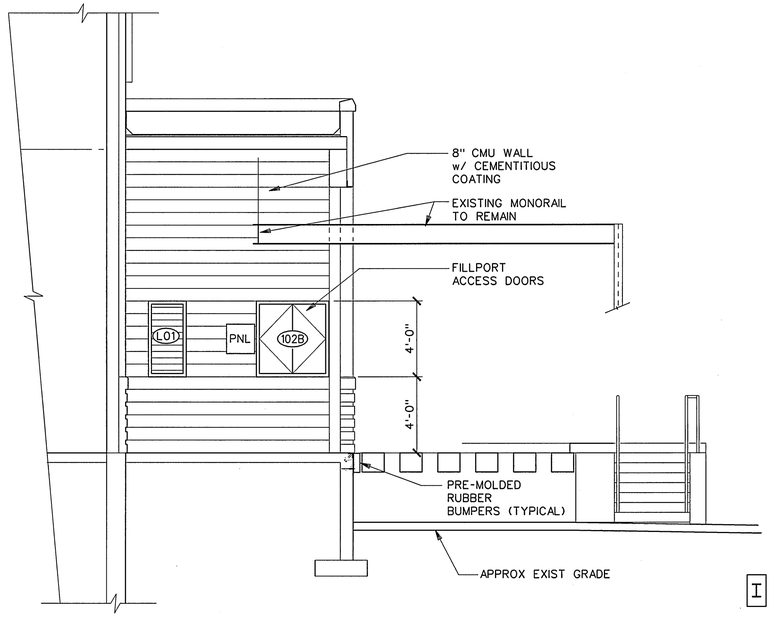

SECTION/ELEVATION THRU DOCK

SCALE: 1/4" = 1'-0"

2 S-2 S-4

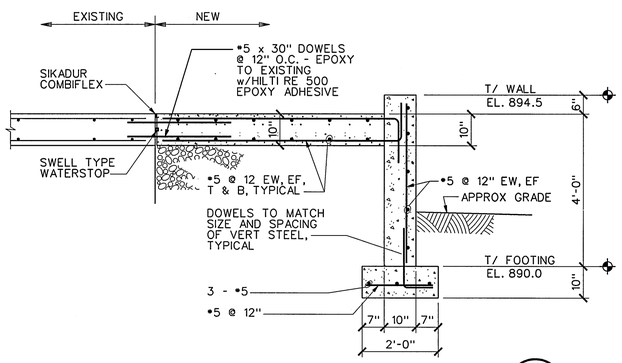

SECTION - CONC PAD & WALL

SCALE: 1/2" = 1'-0"

3 S-7 S-4

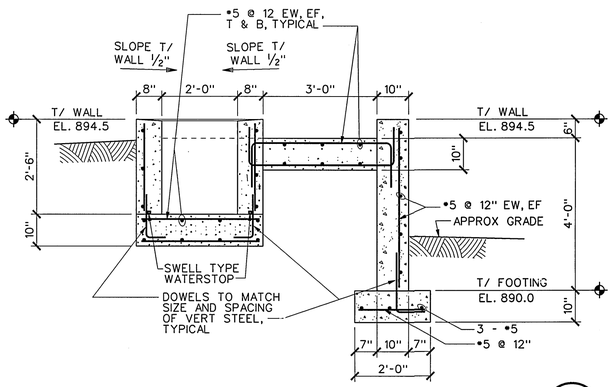

SECTION - FILL STATION, WALKWAY & WALL

SCALE: 1/2" = 1'-0"

4 S-7 S-4

REV.	DATE	BY	APP.	DESCRIPTION

COMMONWEALTH OF VIRGINIA
SCOTT E. SORENSEN
No. 045316
PROFESSIONAL ENGINEER
7/12/06

Wiley & Wilson
Employee-Owned
2310 Langhorne Road
Lynchburg, VA 24501-1547
www.wileywilson.com

BID SET

DESIGNED SES	DRAWN AEL	PROJECT	ABERT WATER TREATMENT PLANT IMPROVEMENTS FOR THE CITY OF LYNCHBURG, VIRGINIA
CHECKED SES	REVIEWED TLF		
COMM. NO. 206076.00	FILE NO.	REFERENCE	STRUCTURAL
CADD NO. 206076s04.dgn		TITLE	CROSS SECTIONS
DATE 7-12-06	DWG. NO. S-4	SHEET NO. 12 OF 23	REV. 0

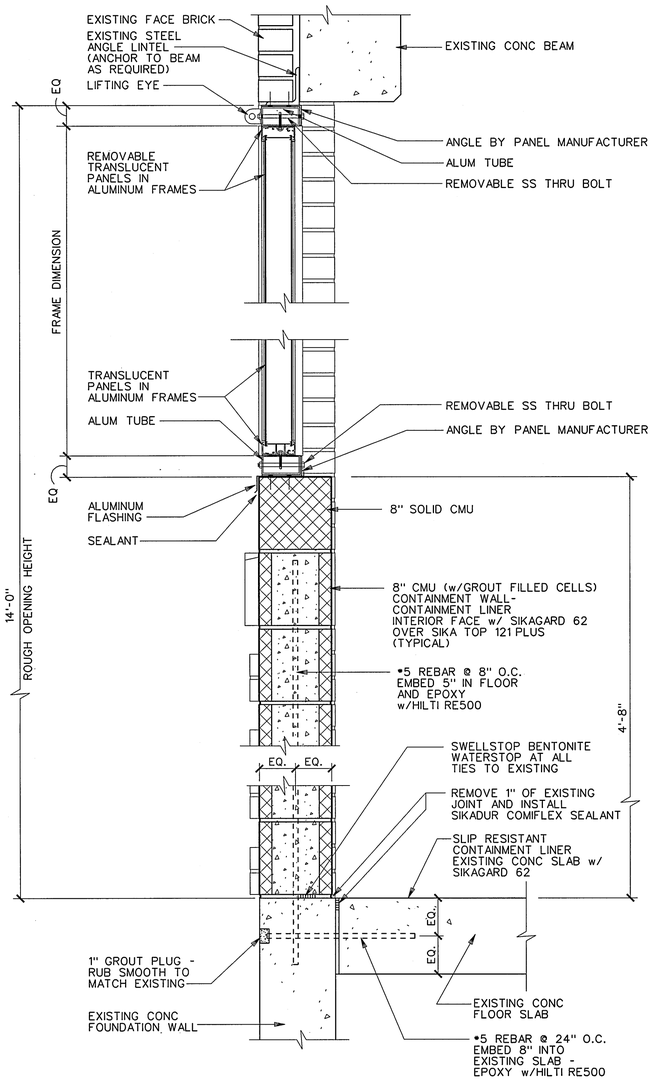

TRANSLUCENT PANEL AND CONTAINMENT WALL DETAILS

SCALE: 1 1/2"=1'-0"

1 — S-2, S-3 / S-5

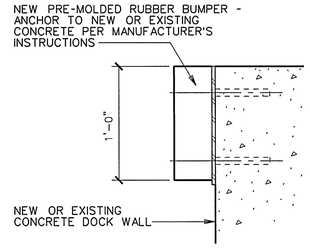

DOCK BUMPER DETAIL

SCALE: 1 1/2"=1'-0"

2 — S-2 / S-5

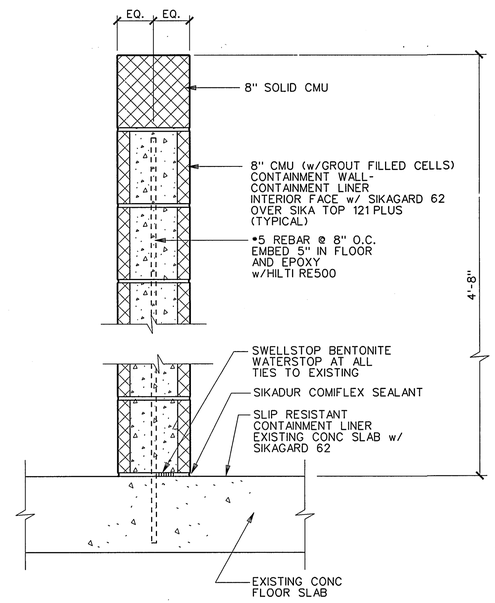

CONTAINMENT WALL DETAILS

SCALE: 1 1/2"=1'-0"

3 — S-2 / S-5

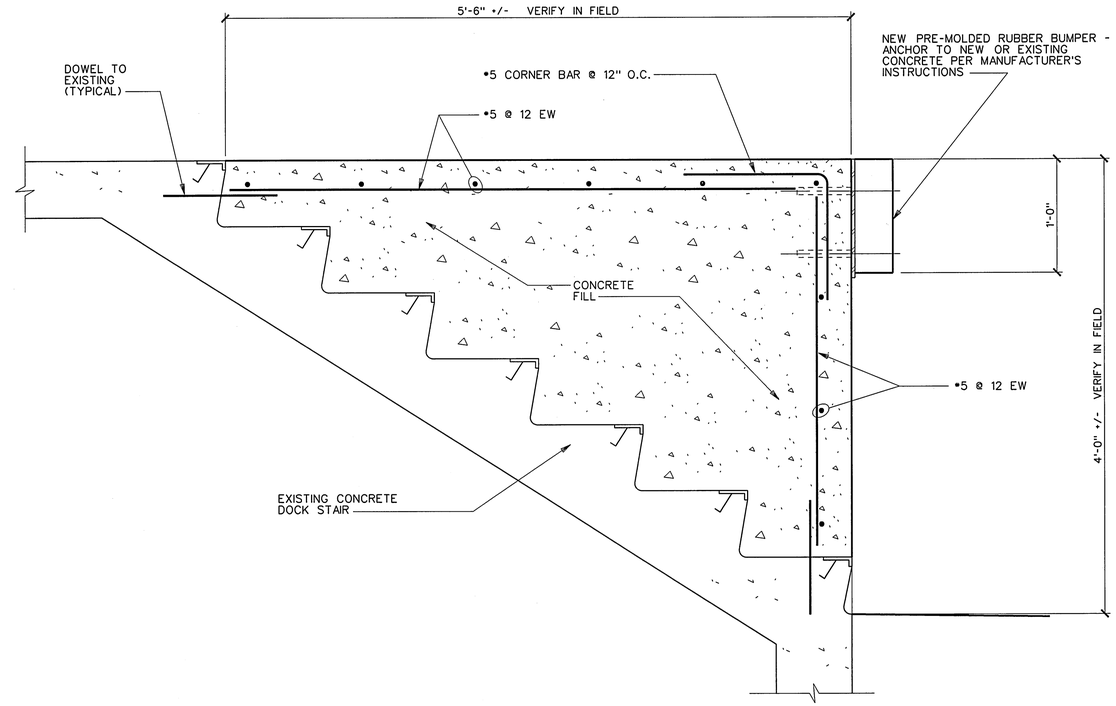

SECTION THRU EXISTING DOCK STAIR INFILL

SCALE: 1 1/2"=1'-0"

4 — S-2, S-3 / S-5

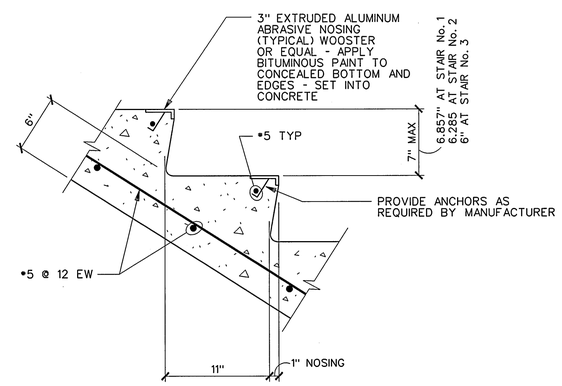

TYPICAL TREAD & RISER DETAIL

SCALE: 1 1/2"=1'-0"

5 — S-1, S-2, S-4 / S-5

REV.	DATE	BY	APP.	DESCRIPTION

COMMONWEALTH OF VIRGINIA — SCOTT E. SCENSION — No. 15596 — PROFESSIONAL ENGINEER

Wiley & Wilson
Employee-Owned
2310 Langhorne Road
Lynchburg, VA 24501-1547
www.wileywilson.com

BID SET

DESIGNED SES	DRAWN AEL	PROJECT	ABERT WATER TREATMENT PLANT IMPROVEMENTS FOR THE CITY OF LYNCHBURG, VIRGINIA
CHECKED SES	REVIEWED TLF		
COMM. NO. 206076.00	FILE NO.	REFERENCE	STRUCTURAL
CADD NO. 206076s05.dgn		TITLE	SECTIONS AND DETAILS
DATE 7-12-06		DWG. NO. S-5	SHEET NO. 13 OF 23 — REV. 0

ROOM FINISH SCHEDULE

		FLOOR		BASE		WALLS		CEILING			REMARKS
		SUBSTRATE	FINISH	SUBSTRATE	FINISH	SUBSTRATE	FINISH	SUBSTRATE	FINISH	HEIGHT	
101	STORAGE ROOM	EXISTING CONCRETE	EXISTING	EXISTING GLAZED BRICK	EXISTING	EXISTING MASONRY & NEW CMU	PAINT	EXISTING EXPOSED CONSTRUCTION	PAINT	VARIES (15'-4" +/-)	
102	CHEMICAL ROOM	EXISTING CONCRETE	SEE REMARKS	--	--	EXISTING MASONRY & NEW CMU	PAINT	EXISTING EXPOSED CONSTRUCTION	PAINT	16'-0" +/-	SODIUM HYPOCHLORITE CONTAINMENT LINER TO 4'-8" A.F.F. SKID RESISTANT FLOOR FINISH.
	EXTERIOR BLOCKWORK	--	--	--	--	CMU	CEMENTITIOUS COATING	--	--	--	
	ALUM/CAUSTIC CONTAINMENT	CONCRETE	SEE REMARKS	--	--	CONCRETE	SEE REMARKS	--	--	--	ALUM/CAUSTIC CONTAINMENT LINER TO TOP OF CONCRETE CONTAINMENT WALL - INTERIOR ONLY. SKID RESISTANT FLOOR & STAIR FINISH.

OPENING SCHEDULE

OPNG NO.	TYPE OF OPENING	OPENING SIZE WIDTH	OPENING SIZE HEIGHT	OPENING SIZE THICK	TYPE	MATL	LOUVER	FRAME MATL	FRAME HEAD	FRAME JAMB	FRAME SILL	LABEL	HDWR SET		REMARKS
101	PAIR DOORS	5'-7"	7'-0"	1¾"	B	H.M.		H.M.	7/S-6	8/S-6	-	-	1		
102A	DOOR	3'-0"	7'-0"	1¾"	A	H.M.		H.M.	7/S-6	8/S-6	-	1 HR	2		
102B	PR ACCESS DOORS	3'-6"	3'-10"	1¾"	C	H.M.		H.M.	1/S-6	2/S-6	3/S-6	1 HR	3		INSULATED
L01	LOUVER	2'-0"	4'-0"	6"	-	AL		AL	4/S-6	5/S-6	6/A-6		-		SEE MECH DWGS
EF1	LOUVER	-	-	-	-	-		-	4/S-6	5/S-6	6/A-6				SEE MECH DWGS FOR SIZE
W01	WINDOW	6'-0"	2'-8"	-	D	-		H.M.	-	-	-	1 HR			

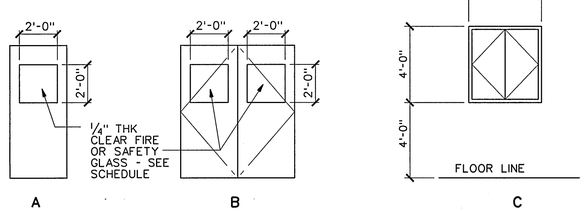

DOOR TYPE ELEVATIONS
SCALE: ¼" = 1'-0"

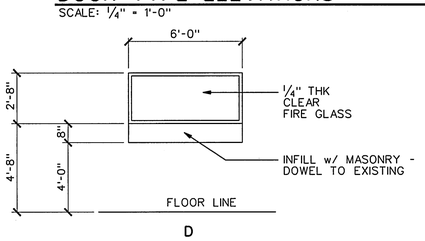

WINDOW TYPE ELEVATIONS
SCALE: ¼" = 1'-0"

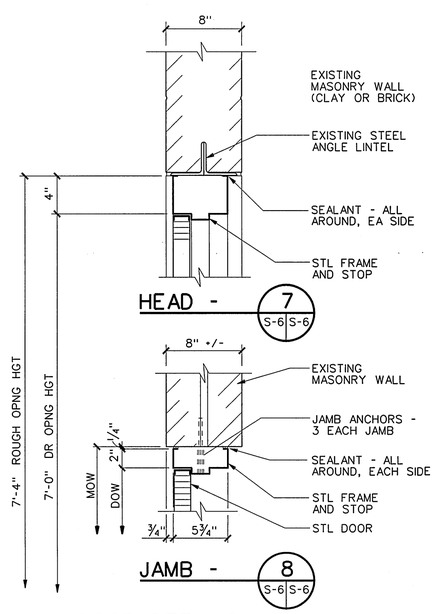

DOOR DETAILS
SCALE: 1½" = 1'-0"

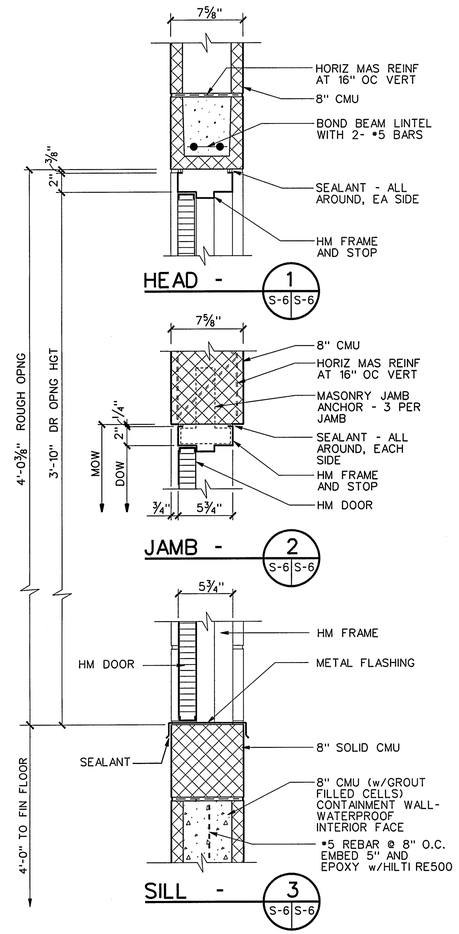

ACCESS DOOR DETAILS
SCALE: 1½" = 1'-0"

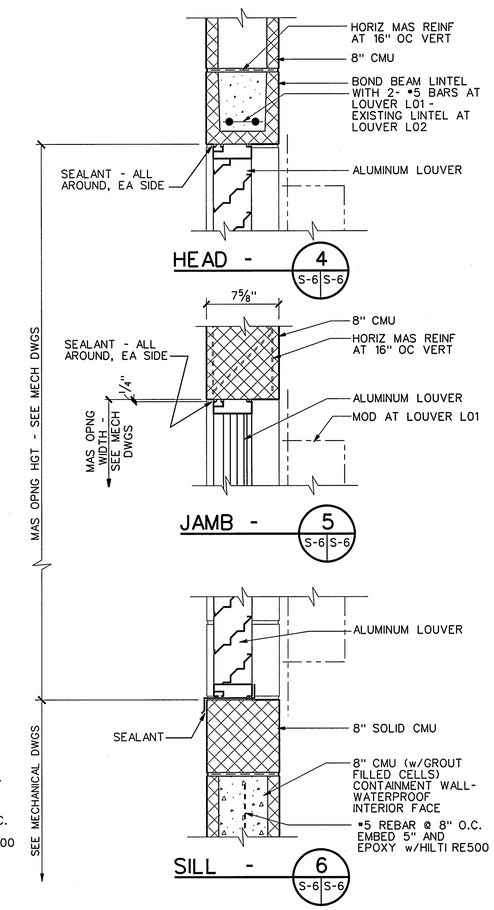

LOUVER DETAILS
SCALE: 1½" = 1'-0"

REV.	DATE	BY	APP.	DESCRIPTION

COMMONWEALTH OF VIRGINIA
ANDREW E. SCHWISEN
No. 14624
PROFESSIONAL ENGINEER

Wiley & Wilson
Employee-Owned
2310 Langhorne Road
Lynchburg, VA 24501-1547
www.wileywilson.com

BID SET

DESIGNED SES	DRAWN AEL	PROJECT	ABERT WATER TREATMENT PLANT IMPROVEMENTS FOR THE CITY OF LYNCHBURG, VIRGINIA
CHECKED SES	REVIEWED TLF		
COMM. NO. 206076.00	FILE NO.	REFERENCE	STRUCTURAL
CADD NO. 206076s06.dgn		TITLE	FINISH & OPENING SCHEDULES AND DETAILS
DATE 7-12-06	DWG. NO. S-6	SHEET NO. 14 OF 23	REV. 0

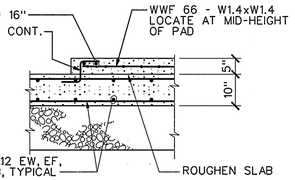

TANK PAD DETAIL (1 / S-1 | S-7)

SCALE: 1/2" = 1'-0"

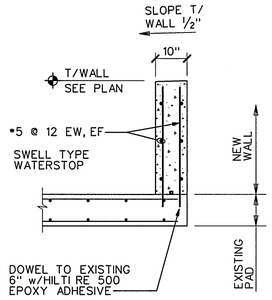

TYPICAL CONTAINMENT WALL TO EXISTING PAD DETAIL (3 / S-1 | S-7)

SCALE: 1/2" = 1'-0"

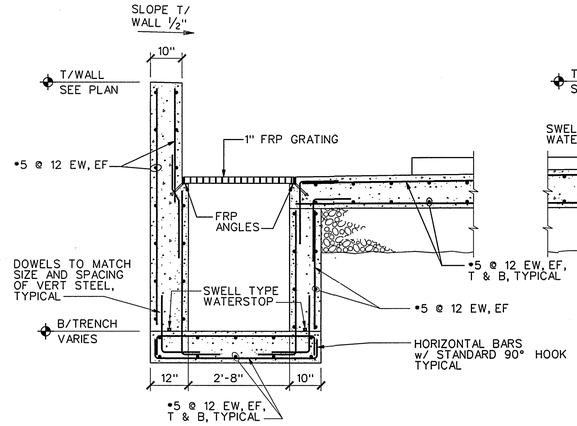

SECTION AT TANK CONTAINMENT (4 / S-1 | S-7)

SCALE: 1/2" = 1'-0"

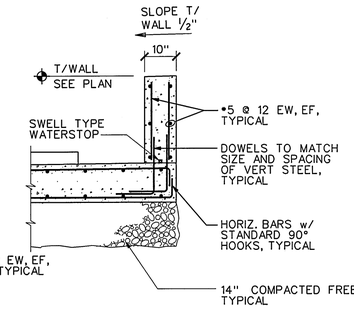

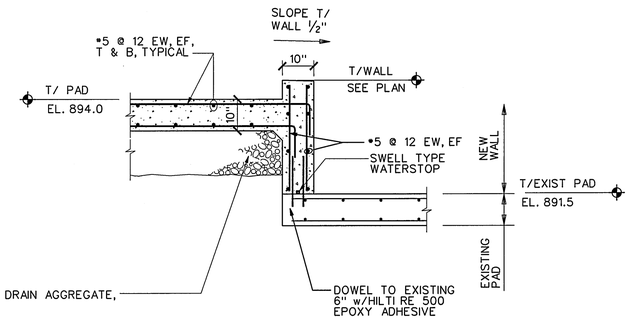

SECTION - TANK CONTAINMENT WALL AT EXISTING PAD (5 / S-1 | S-7)

SCALE: 1/2" = 1'-0"

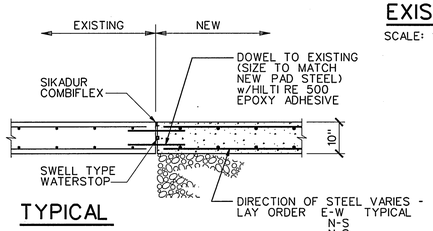

TYPICAL ATTACHMENT - EXISTING TO NEW PAD DETAIL (2 / S-1 | S-7)

SCALE: 1/2" = 1'-0"

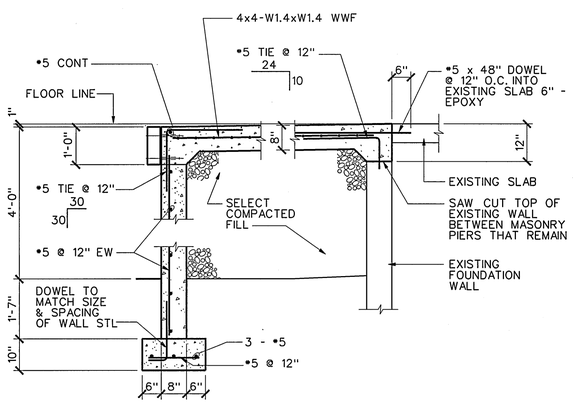

DOCK DETAILS (6 / S-1 | S-7)

SCALE: 1/2" = 1'-0"

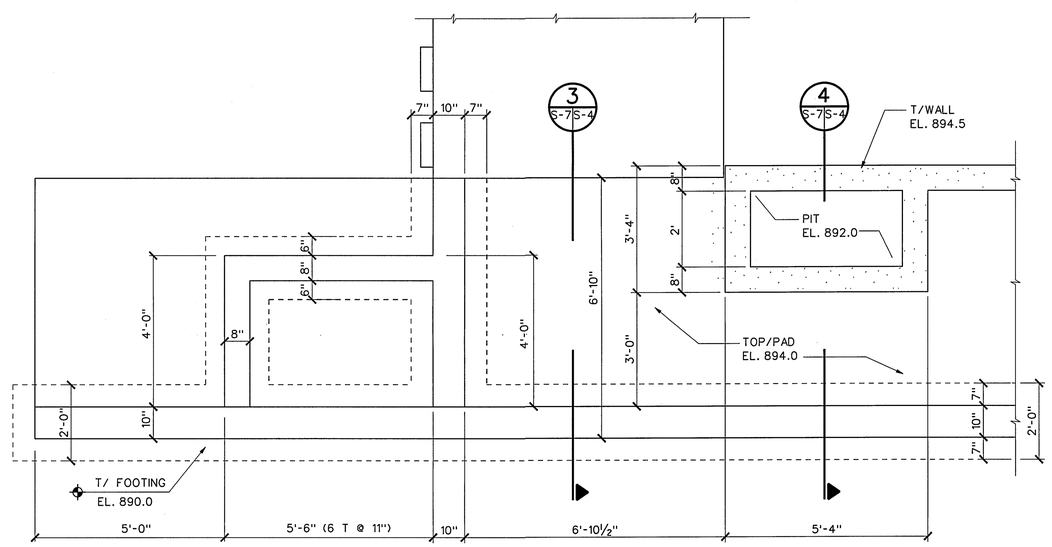

STAIR FOOTING PLAN - STAIR No. 2 (7 / S-1 | S-7)

SCALE: 1/2" = 1'-0"

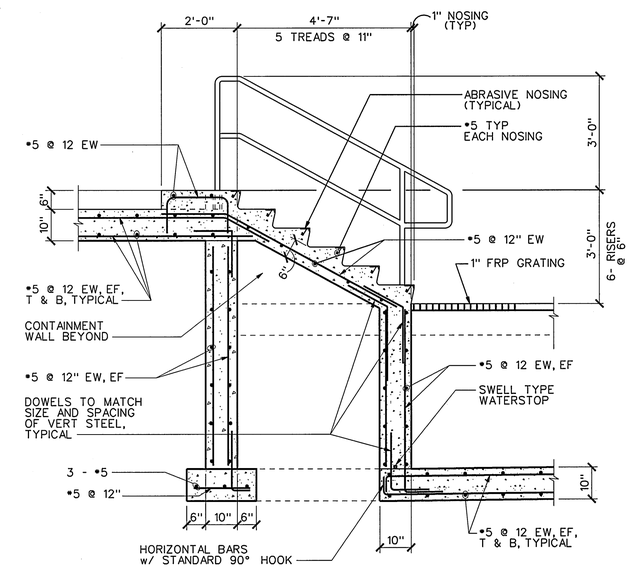

STAIR No. 3 SECTION (8 / S-1 | S-7)

SCALE: 1/2" = 1'-0"

REV.	DATE	BY	APP.	DESCRIPTION

COMMONWEALTH OF VIRGINIA
SCOTT L. SOENKSEN
No. 21634
7/11/06
PROFESSIONAL ENGINEER

Wiley & Wilson
Employee-Owned
2310 Langhorne Road
Lynchburg, VA 24501-1547
www.wileywilson.com

BID SET

DESIGNED SES	DRAWN AEL	PROJECT: ABERT WATER TREATMENT PLANT IMPROVEMENTS FOR THE CITY OF LYNCHBURG, VIRGINIA
CHECKED SES	REVIEWED TLF	
COMM. NO. 206076.00	FILE NO.	REFERENCE: STRUCTURAL
CADD NO. 206076s07.dgn		TITLE: CROSS SECTIONS
DATE 7-12-06	DWG. NO. S-7	SHEET NO. 15 OF 23 — REV. 0

HVAC AND PIPING LEGEND

—— CW ——	DOMESTIC COLD WATER		PIPE TURNING DOWN
—— HW ——	DOMESTIC HOT WATER		PIPE TURNING DOWN FROM BOTTOM OF PIPE
—— TW ——	TEPID WATER		CONCENTRIC REDUCER
	CHECK VALVE		DIRECTION OF FLOW IN PIPING
	BALL VALVE		POINT OF CONNECTION NEW TO EXISTING WORK
	PIPE TURNING UP	(T)	THERMOSTAT

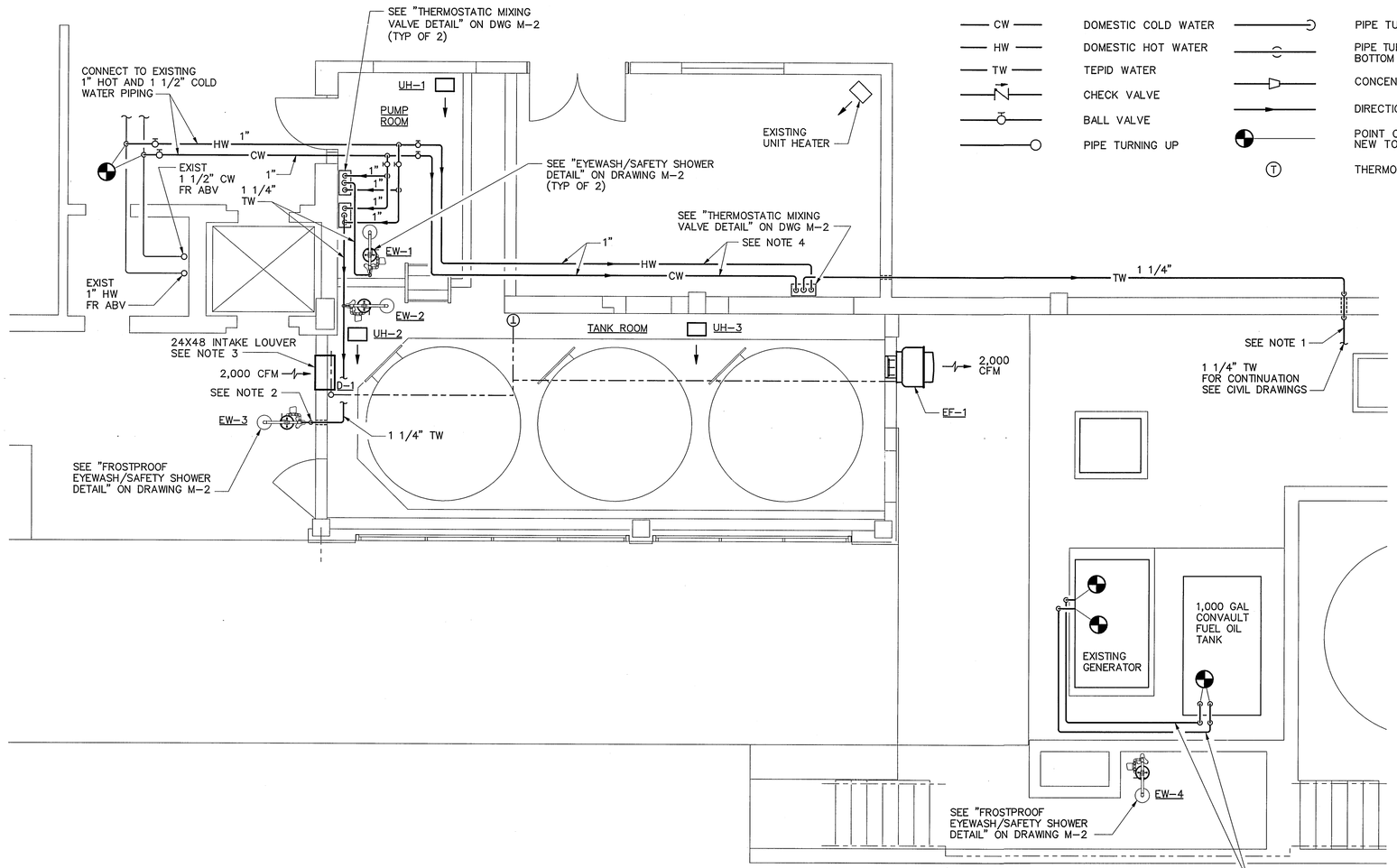

NEW WORK PLAN - MECHANICAL

SCALE: 1/4" = 1'-0"

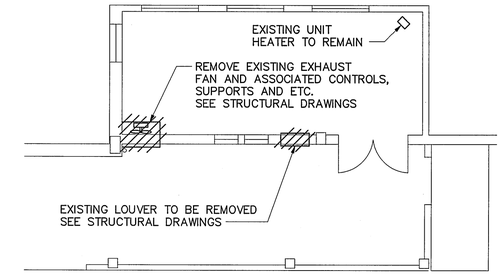

DEMOLITION PLAN - MECHANICAL

SCALE: 1/8" = 1'-0"

GENERAL NOTES:

1. THESE DRAWINGS ARE SCHEMATIC IN NATURE AND INDICATE THE GENERAL AND APPROXIMATE LOCATION OF EQUIPMENT AND PIPING. FIELD VERIFY ALL DIMENSIONS.
2. INSTALL ALL MECHANICAL EQUIPMENT AND APPURTENANCES IN ACCORDANCE WITH MANUFACTURER'S RECOMMENDATIONS, CONTRACT DOCUMENTS, AND APPLICABLE CODES AND REGULATIONS.
3. THE CONTRACTOR SHALL COORDINATE THE INSTALLATION OF WORK WITH THE WORK OF OTHER TRADES. MINOR DEVIATIONS FROM THE PLANS MAY BE MADE TO AVOID CONFLICTS.
4. ALL NECESSARY ALLOWANCES AND PROVISIONS SHALL BE MADE BY THIS CONTRACTOR FOR BEAMS, COLUMNS, JOIST, OR OTHER OBSTRUCTIONS OF THE BUILDING OR THE WORK OF OTHER CONTRACTORS, WHETHER OR NOT SAME IS INDICATED.
5. ALL PIPING SHALL BE SLEEVED THROUGH WALL PENETRATIONS.
6. PROVIDE OPENINGS IN BUILDING CONSTRUCTION FOR PASSAGE OF PIPING. DO NOT PENETRATE STRUCTURAL MEMBERS.
7. ALL MISCELLANEOUS MATERIAL REQUIRED TO ENSURE PROPER INSTALLATION AND SHOWN IN DETAILS FOR PIPING AND EQUIPMENT (UNLESS OTHERWISE NOTED) SHALL BE FURNISHED AND INSTALLED BY THE MECHANICAL CONTRACTOR.
8. ALL MECHANICAL EQUIPMENT AND SYSTEMS SHALL BE INSTALLED IN A MANNER WHICH MINIMIZES NOISE AND VIBRATION.
9. COORDINATE MECHANICAL EQUIPMENT AND MATERIAL LOCATIONS WITH ELECTRICAL, STRUCTURAL AND CIVIL PLANS TO AVOID CONFLICTS.
10. COMPLETE AND PROPER INSTALLATION OF THERMOSTATS AND ALL OTHER NECESSARY FIELD MOUNTED CONTROL COMPONENTS SHALL BE THE RESPONSIBILITY OF THE MECHANICAL CONTRACTOR. ALL CONTROL WIRING SHALL BE IN CONDUIT AND INSTALLED PER DIVISION 16 OF THE SPECIFICATIONS.

ABBREVIATIONS

@	AT
ABV	ABOVE
BEL	BELOW
BTU/H	BRITISH THERMAL UNIT
CFM	CUBIC FEET PER MINUTE
CONC	CONCRETE
DEG	DEGREES
DWG	DRAWING
EXIST	EXISTING
F	FAHRENHEIT
FIN	FINISH
FL	FLOOR
FOR	FUEL OIL RETURN
FOS	FUEL OIL SUPPLY
FR	FROM
FT	FEET
GPM	GALLONS PER MINUTE
H2O	WATER
KW	KILOWATT
RPM	REVOLUTIONS PER MINUTE
T'STAT	THERMOSTAT
TYP	TYPICAL

IF THIS DRAWING IS A REDUCTION, GRAPHIC SCALE MUST BE USED.

5' 0 5'

1/4" = 1'-0"

NOTES:

1. 1 1/4" TW PIPE TO EW-4 SHALL BE INSULATED AND HEAT TRACED @ 5 WATTS/FT. SEE CIVIL DRAWINGS FOR ROUTING AND SEE CIVIL SPECIFICATIONS FOR HEAT TRACING.
2. 1 1/4" TW PIPE TO EW-3 SHALL BE INSULATED AND HEAT TRACED @ 5 WATTS/FT PER CIVIL SPECIFICATIONS. SEE CIVIL SPECIFICATIONS FOR HEAT TRACING.
3. SEE STRUCTURAL DRAWINGS FOR LOUVER LOCATION AND TYPE.
4. SEE SPECIFICATIONS FOR PIPE SUPPORTS AND HANGERS.

SPRINKLERS:

SPRINKLER PIPING SHALL BE SCHEDULE 40 STEEL PIPING, PER NFPA 13. PROVIDE NOMINAL 0.50 INCH ORIFICE SPRINKLER HEADS. O-RINGS WILL NOT BE PERMITTED IN SPRINKLER HEADS. TEMPERATURE RATING PER NFPA 13.

CONTRACTOR TO PROVIDE HYDRAULIC CALCULATIONS.

PIPE AND PIPE FITTINGS:

1. EXECUTION: DRAWINGS ARE INTENDED TO INDICATE THE GENERAL ARRANGEMENT OF PIPING SYSTEMS AND ARE NOT INTENDED TO CONVEY PRECISE LOCATIONAL INFORMATION. VERIFY FIELD CONDITIONS PRIOR TO FABRICATION. OFFSETS, FITTINGS, AND EXTRA PIPE, NECESSARY TO AVOID INTERFERENCE OR PROVIDE MAXIMUM HEADROOM AND SPACE, SHALL BE FURNISHED AND INSTALLED WITHOUT ADDITIONAL EXPENSE TO THE OWNER.
2. THE INTERIOR SURFACES OF PIPING SHALL BE SMOOTH AND ENTIRELY FREE FROM OBSTRUCTIONS TO FLOW. CLEAN AND FLUSH THE SYSTEMS BEFORE CONNECTING TO EQUIPMENT. VERIFY THAT ALL FOREIGN MATERIAL HAS BEEN REMOVED BEFORE PLACING IN SERVICE.
3. INTERIOR PIPE SCHEDULE:

SERVICE	SIZE	TYPE	FITTING TYPE	VALVE TYPE
DOMESTIC HOT AND COLD WATER SUPPLY AND TEPID WATER	2 1/2" AND SMALLER	TYPE L COPPER	WGT COPPER SOLDER	BALL CHECK

4. VALVES:

BALL VALVE:
TWO PIECE BRONZE BODY VALVE, 600 PSI WORKING NONSHOCK COLD WOG PRESSURE, SOLDER ENDS, STAINLESS STEEL BALL, STANDARD PORT, REINFORCED TEFLON SEATS. 1/4 – THROUGH 2-INCH SIZES. QUALITY STANDARD, CRANE 9322-S, WATTS B-6001-SS-04, MILWAUKEE BA-150S.

CHECK VALVE:
BRONZE SWING CHECK VALVE, CLASS 125, SOLDER ENDS, THREADED CAP, BRASS OR BRONZE DISC, BRONZE SEAT. 1/4 – THROUGH 2-INCH SIZES. QUALITY STANDARD CRANE 1707S, NIBCO S-413-B, WALWORTH 3406SJ, MILWAUKEE 1509T.

5. INTERIOR PIPE INSULATION:

DOMESTIC HOT, COLD AND TEPID WATER SHALL BE INSULATED. INSULATE PIPE WITH ONE INCH FIBERGLASS INSULATION WITH ALL SERVICE JACKET SUITABLE FOR OUTSIDE APPLICATIONS. DOMESTIC COLD WATER SHALL HAVE INTEGRAL VAPOR BARRIER.

REV.	DATE	BY	APP.	DESCRIPTION

COMMONWEALTH OF VIRGINIA
MICHAEL J. GEHL
No. 024298
7/12/06
PROFESSIONAL ENGINEER

Wiley & Wilson
Employee-Owned
2310 Langhorne Road
Lynchburg, VA 24501-1547
www.wileywilson.com

BID SET

DESIGNED JFC	DRAWN JFC	PROJECT	ABERT WATER TREATMENT PLANT IMPROVEMENTS FOR THE CITY OF LYNCHBURG, VIRGINIA
CHECKED MJG	REVIEWED TLF		
COMM. NO. 206076.00	FILE NO.	REFERENCE	MECHANICAL
CADD NO. 206076M01		TITLE	PARTIAL PLANS - HVAC AND PIPING
DATE 7-12-06	DWG. NO. M-1	SHEET NO. 16 OF 23	REV. 0

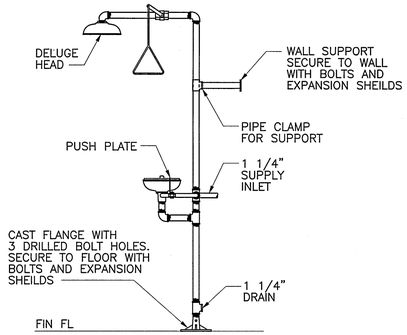

NOTE:

BRADLEY CORPORATION, MODEL S19-310H EYEWASH/SAFETY SHOWER WITH PLASTIC SHOWER HEAD AND BOWL. PROVIDE UNIT WITH STANDARD FEATURES.

EYEWASH/SAFETY SHOWER DETAIL

NOT TO SCALE (FOR EW-1)

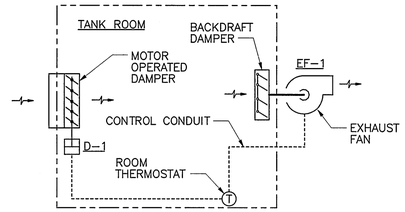

EXHAUST FAN EF-1 CONTROL DIAGRAM

NOT TO SCALE

SEQUENCE OF OPERATION:

AUTO POSITION:

UPON A RISE IN SPACE TEMPERATURE ABOVE THE SETPOINT, THE ROOM THERMOSTAT SHALL CAUSE THE INTAKE DAMPER D-1 TO OPEN. AUXILLARY CONTACTS IN THE INTAKE DAMPER MOTOR SHALL BE USED TO START FAN EF-1 WHEN DAMPER IS FULLY OPEN. FAN EF-1 SHALL STOP AND THE INTAKE DAMPER D-1 SHALL CLOSE WHEN ROOM TEMPERATURE FALLS BELOW THE SETPOINT.

HAND POSITION:

WHEN THE SWITCH IS IN HAND POSITION, THE INTAKE DAMPER D-1 AND FAN EF-1 SHALL OPERATE AS DESCRIBED IN THE AUTO POSITION REGARDLESS OF THE TEMPERATURE SETPOINT.

OFF POSITION:

WHEN THE SWITCH IS IN THE OFF POSITION, THE INTAKE DAMPER D-1 AND FAN EF-1 REMAIN CLOSED/OFF.

FAN SCHEDULE

DESIGNATION	EF-1
ROOM SERVED	TANK ROOM
FAN TYPE	CENTRIFUGAL SIDEWALL
MANUFACTURER	GREENHECK
MODEL NUMBER	CWB-161-5
CAPACITY - CFM	2,000
STATIC PRESSURE - INCHES H20	.625
MOTOR POWER - HORSEPOWER	1/2
FAN SPEED - RPM	990
DRIVE	BELT
ELECTRICAL VOLTAGE/PHASE	SEE ELECTRICAL
REMARKS:	PROVIDE WITH POWER DISCONNECT AND BACKDRAFT DAMPER AND STANDARD FEATURES

UNIT HEATER SCHEDULE

DESIGNATION	UH-1	UH-2 AND UH-3
AREA SERVED	FEED PUMP ROOM	TANK ROOM
MANUFACTURER	CHROMALOX	CHROMALOX
MODEL NUMBER	LUH-02	LUH-04
CAPACITY - KW	2.6	4.0
HEAT CAPACITY - BTUH	8,879	13,660
FAN CAPACITY - CFM	310	310
FAN MOTOR HORSEPOWER	1/50	1/50
UNIT TYPE	HORIZONTAL	HORIZONTAL
VOLTAGE/PHASE	SEE ELECTRICAL	SEE ELECTRICAL
REMARKS: TYPICAL SETPOINT @ 60 DEG. F	PROVIDE MOUNTING KIT, POWER DISCONNECT AND BUILT-IN T'STAT	PROVIDE MOUNTING KIT, POWER DISCONNECT AND BUILT-IN T'STAT

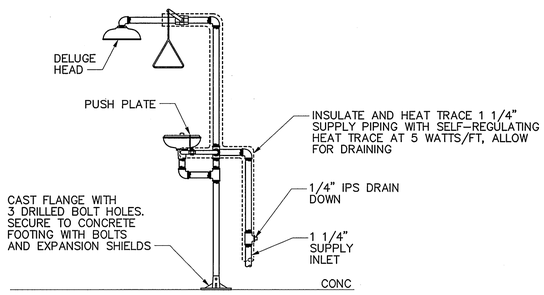

NOTE:

BRADLEY CORPORATION, MODEL S19-310HFP FROSTPROOF EMERGENCY EYEWASH/SAFETY SHOWER, PROVIDE UNIT WITH STANDARD FEATURES.

FROSTPROOF EYEWASH/SAFETY SHOWER DETAIL

NOT TO SCALE (FOR EW-3 AND EW-4)

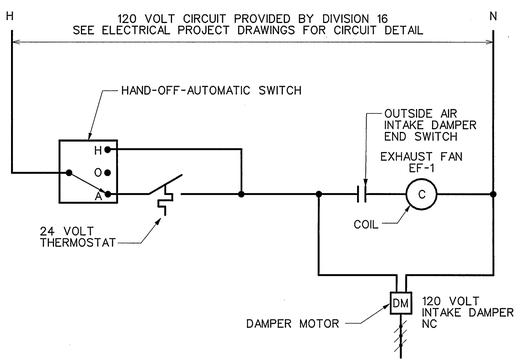

EXHAUST FAN EF-1 WIRING DIAGRAM

NOT TO SCALE

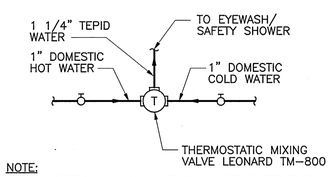

NOTE:

THERMOSTATIC MIXING VALVE SHALL BE RATED FOR USE WITH EYEWASH/SAFETY SHOWER APPLICATIONS.

THERMOSTATIC MIXING VALVE DETAIL

NOT TO SCALE

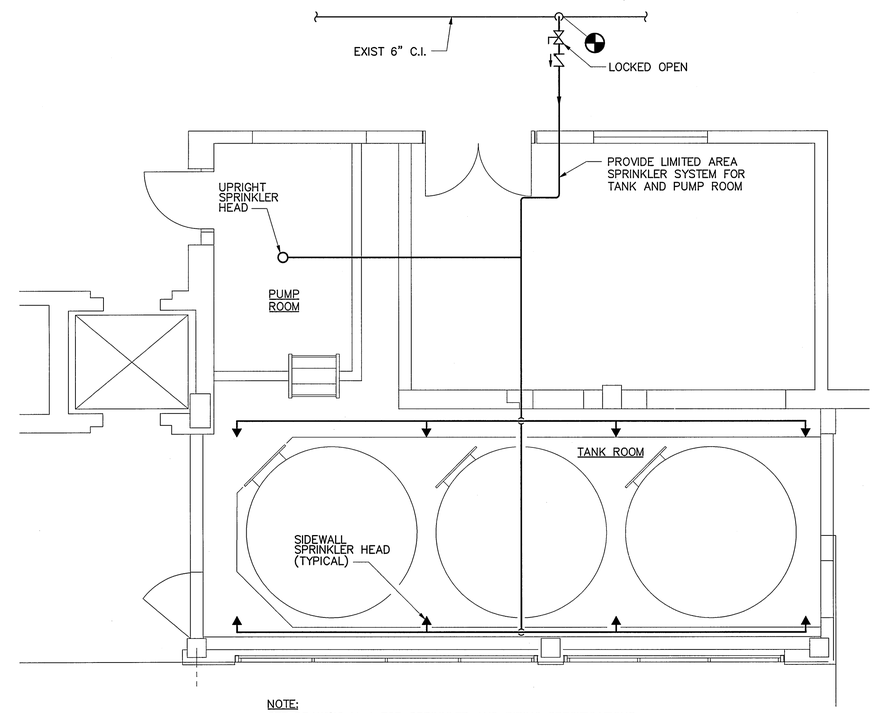

NOTE:

SEE DRAWING M-1 FOR SPRINKLER AND PIPING SPECIFICATIONS.

NEW WORK PLAN - FIRE SUPPRESSION

SCALE: 1/4" = 1'-0"

REV.	DATE	BY	APP.	DESCRIPTION

COMMONWEALTH OF VIRGINIA
MICHAEL J. GEHL
No. 024298
7/12/06
PROFESSIONAL ENGINEER

Wiley & Wilson
Employee-Owned
2310 Langhorne Road
Lynchburg, VA 24501-1547
www.wileywilson.com

BID SET

DESIGNED JFC	DRAWN JFC	PROJECT	ABERT WATER TREATMENT PLANT IMPROVEMENTS FOR THE CITY OF LYNCHBURG, VIRGINIA
CHECKED MJG	REVIEWED TLF		
COMM. NO. 206076.00	FILE NO.	REFERENCE	MECHANICAL
CADD NO. 206076M02		TITLE	SCHEDULES AND DETAILS
DATE 7-12-06		DWG. NO. M-2	SHEET NO. 17 OF 23 REV. 0

LEGEND

- CONDUIT RUN CONCEALED IN WALLS AND EXPOSED ELSEWHERE
- HOMERUN TO PANELBOARD
- CONNECTION POINT
- EXISTING FLUORESCENT LIGHT FIXTURE
- FLUORESCENT LIGHTING FIXTURE
- EMERGENCY BATTERY LIGHT FIXTURE
- POLE MOUNTED LIGHT FIXTURE
- S — SINGLE POLE SWITCH
- NEMA 5-20R DUPLEX RECEPTACLE
- NEMA 5-20R QUADRUPLEX RECEPTACLE
- PANEL AS INDICATED ON DRAWINGS
- 208/120 VOLT PANELBOARD
- J — JUNCTION BOX
- M — MOTOR
- DISCONNECT SWITCH, 3 POLE, 30 AMP, NON-FUSIBLE UNLESS OTHERWISE INDICATED
- MOLDED CASE CIRCUIT BREAKER
- 480-120/208V, 3-PH TRANSFORMER
- XXX YYY — FIELD MOUNTED INSTRUMENT OR DEVICE - XXX INDICATES DEVICE TYPE YYY INDICATES DEVICE LOOP NUMBER
- PANEL MOUNTED INSTRUMENT OR DEVICE - NORMALLY ACCESSIBLE TO OPERATOR
- INSTRUMENT OR DEVICE MOUNTED INSIDE PANEL - NORMALLY INACCESSIBLE TO OPERATOR
- MANUALLY OPERATED VALVE
- PRESSURE REGULATING VALVE
- ALARM HORN
- PROCESS PIPING OR INSTRUMENT CONNECTION TO PROCESS
- ELECTRICAL CONTROL SIGNAL

ABBREVIATIONS

A,AMP	AMPERE(S)
AF	AMPERE FRAME
AI	ANALOG INPUT
AT	AMPERE TRIP
CHEM	CHEMICAL
CKT	CIRCUIT
CONN	CONNECTED
CP	CHEMICAL PUMP
DI	DIGITAL INPUT
DO	DIGITAL OUTPUT
EGC	EQUIPMENT GROUNDING CONDUCTOR
EXIST	EXISTING
FIC	FLOW INDICATOR CONTROLLER
FIR	FLOW INDICATOR RECORDER
FIT	FLOW INDICATOR TRANSMITTER
FN	FLOW SETPOINT INPUT
H-O-R	HAND-OFF-REMOTE
HS	HAND SWITCH
I/O	INPUT/OUTPUT
kVA	KILO-VOLT AMPERE
LAH	LEVEL ALARM HIGH
LAL	LEVEL ALARM LOW
LE	LEVEL ELEMENT
LI	LEVEL INDICATOR
LIR	LEVEL INDICATING RECORDER
LIT	LEVEL INDICATING TRANSMITTER
LSH	LEVEL SWITCH HIGH
LTS	LIGHTS
N,NEUT	NEUTRAL
OR	LOGICAL OR
P	POLE
PH	PHASE
PLC	PROGRAMMABLE LOGIC CONTROLLER
RM	ROOM
RTU	REMOTE TERMINAL UNIT
SYM	SYMMETRICAL
TYP	TYPICAL
V	VOLT
YI	STATUS INDICATION

NOTES:

1. PANEL "P3" SHALL BE A SQUARE D MINI POWER-ZONE CATALOG NUMBER MP215T2F OR EQUAL BY CUTLER HAMMER. THIS UNIT HAS A 480 VOLT, 40 AMP PRIMARY BREAKER, A 15 kVA 480/208-120 VOLT TRANSFORMER AND A 60 AMP SECONDARY CIRCUIT BREAKER. AN INTEGRAL PANELBOARD SHALL CONTAIN 24 POLES OF CIRCUIT BREAKERS.

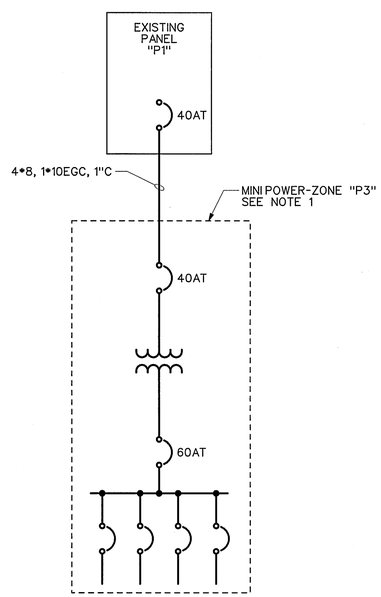

PARTIAL ONE-LINE LINE DIAGRAM

NOT TO SCALE

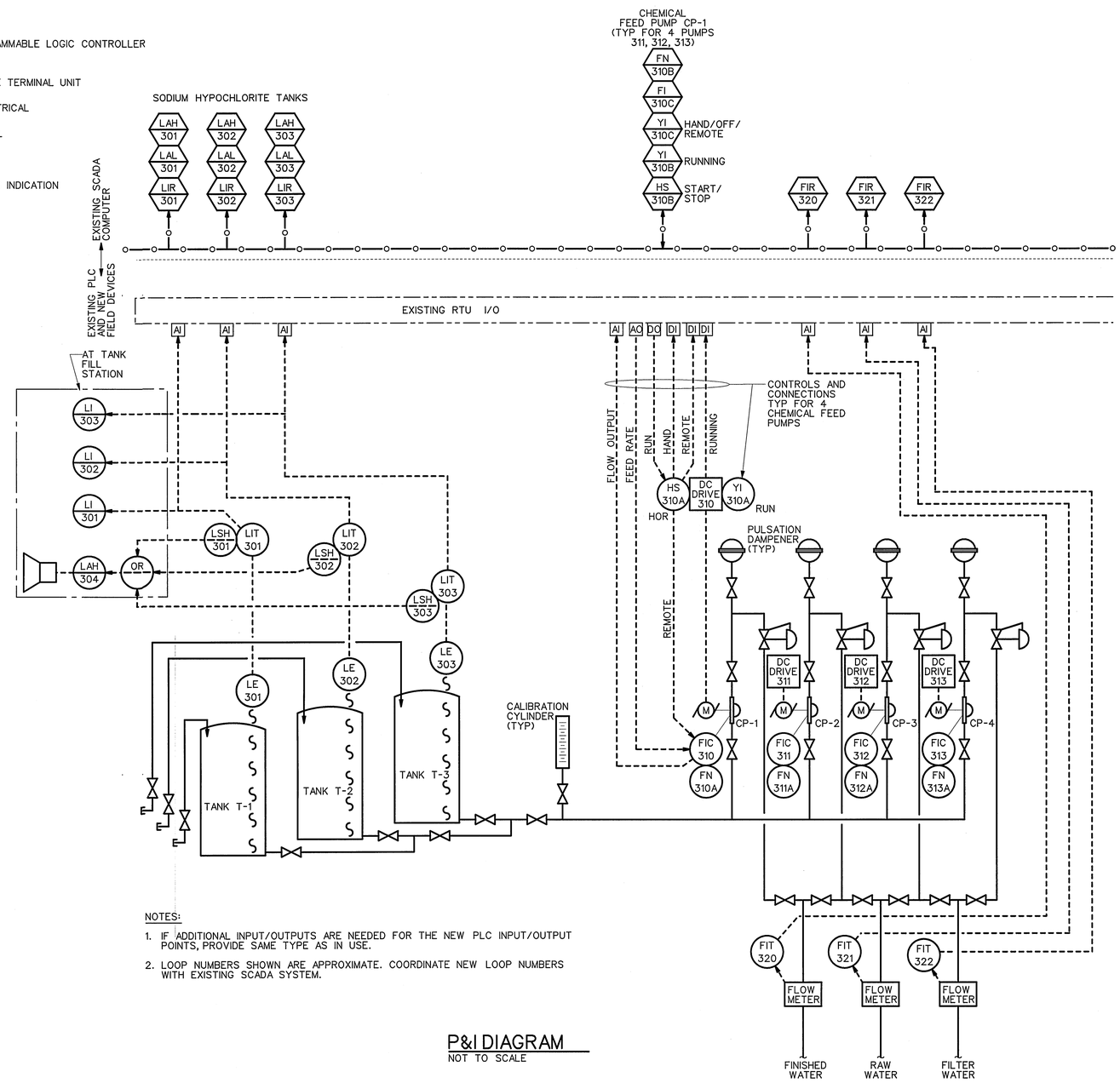

NOTES:

1. IF ADDITIONAL INPUT/OUTPUTS ARE NEEDED FOR THE NEW PLC INPUT/OUTPUT POINTS, PROVIDE SAME TYPE AS IN USE.
2. LOOP NUMBERS SHOWN ARE APPROXIMATE. COORDINATE NEW LOOP NUMBERS WITH EXISTING SCADA SYSTEM.

P&I DIAGRAM

NOT TO SCALE

REV.	DATE	BY	APP.	DESCRIPTION

COMMONWEALTH OF VIRGINIA — WARREN M. CHILDRESS — No. 8025 — 7-12-2006 — PROFESSIONAL ENGINEER

Wiley & Wilson
Employee-Owned
2310 Langhorne Road
Lynchburg, VA 24501-1547
www.wileywilson.com

BID SET

DESIGNED JWG	DRAWN JWG	PROJECT	ABERT WATER TREATMENT PLANT IMPROVEMENTS FOR THE CITY OF LYNCHBURG, VIRGINIA
CHECKED WMC	REVIEWED TLF		
COMM. NO. 206076.00	FILE NO.	REFERENCE	ELECTRICAL
CADD NO. 206076e01.dgn		TITLE	LEGEND, ABBREVIATION, P&I DIAGRAM
DATE 7-12-06	DWG. NO. E-1	SHEET NO. 18 OF 23	REV. 0

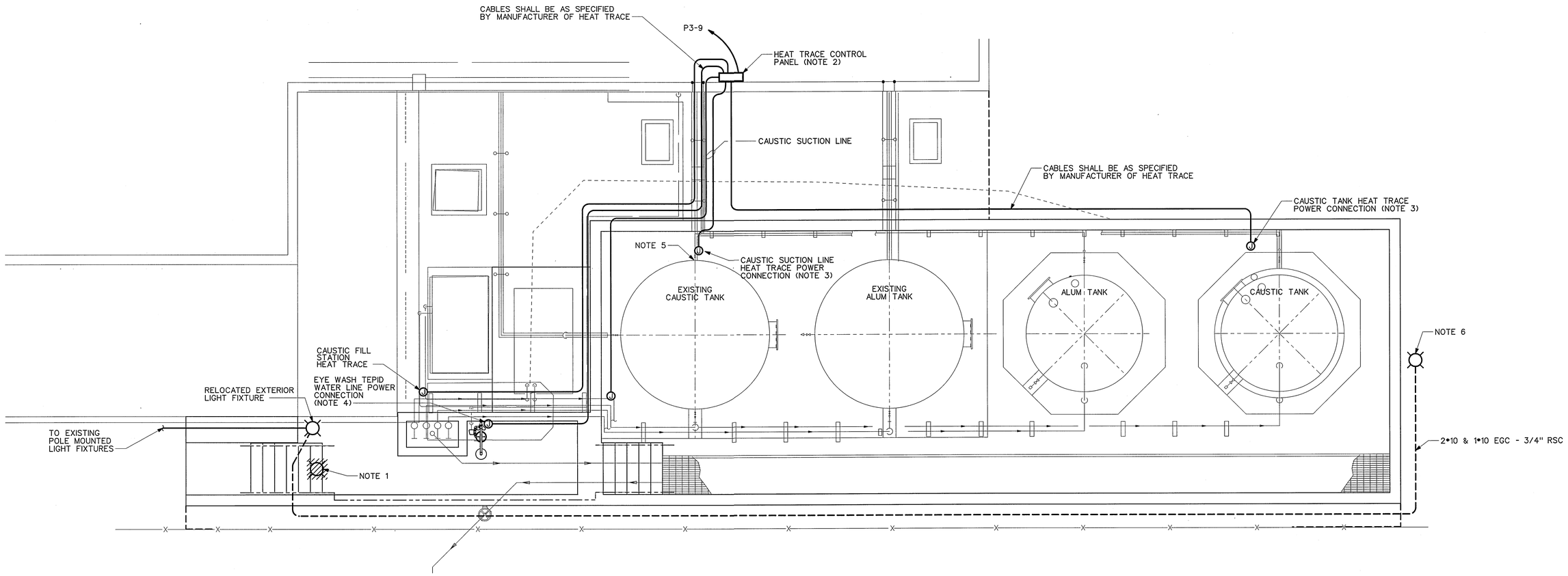

PARTIAL ELECTRICAL SITE PLAN

SCALE: 1/4" = 1'-0"

NOTES:

1. RELOCATE EXISTING EXTERIOR POLE MOUNTED LIGHT FIXTURE TO LOCATION SHOWN. EXTEND CONDUIT AND CONDUCTORS, AS NECESSARY. CONTRACTOR SHALL COORDINATE WITH ANY NEW AND EXISTING UNDERGROUND UTILITIES.
2. COORDINATE LOCATION OF HEAT TRACE CONTROL PANEL WITH EXISTING EQUIPMENT AND DEVICES.
3. PROVIDE HEAT TRACE CONDUCTORS AND ALL NECESSARY EQUIPMENT ON CAUSTIC TANK AND CAUSTIC SUCTION LINES, AS SPECIFIED.
4. PROVIDE HEAT TRACE ON EYE WASH STATION TEPID WATER LINE. HEAT TRACE SHALL BE 5 WATTS PER FOOT TO MAINTAIN 70 DEG F. CONDUCTORS AND ALL NECESSARY EQUIPMENT SHALL BE AS SPECIFIED. CONNECT EYE WASH HEAT TRACE INTO NEW HEAT TRACE CONTROL PANEL, AS SHOWN.
5. RE-WORK EXISTING CAUSTIC TANK AND CAUSTIC SUCTION LINE HEAT TRACE AND CONNECT TO NEW HEAT TRACE CONTROL PANEL, AS NECESSARY.
6. PROVIDE A POLE MOUNTED LIGHT FIXTURE, LITHONIA CATALOG NUMBER "KC1 250M 20C R4 4C" OR EQUAL. SEE "DETAIL - POLE BASE" DWG E-6 FOR FURTHER INFORMATION.

REV.	DATE	BY	APP.	DESCRIPTION

COMMONWEALTH OF VIRGINIA
WARREN M. CHILDRESS
No. 8025
7-12-2006
PROFESSIONAL ENGINEER

Wiley & Wilson
Employee-Owned
2310 Langhorne Road
Lynchburg, VA 24501-1547
www.wileywilson.com

BID SET

DESIGNED JWG	DRAWN JWG	PROJECT	ABERT WATER TREATMENT PLANT IMPROVEMENTS FOR THE CITY OF LYNCHBURG, VIRGINIA
CHECKED WMC	REVIEWED TLF		
COMM. NO. 206076.00	FILE NO.	REFERENCE	ELECTRICAL
CADD NO. 206076e02.dgn		TITLE	PARTIAL ELECTRICAL SITE PLAN
DATE 7-12-06		DWG. NO. E-2	SHEET NO. 19 OF 23 — REV. 0

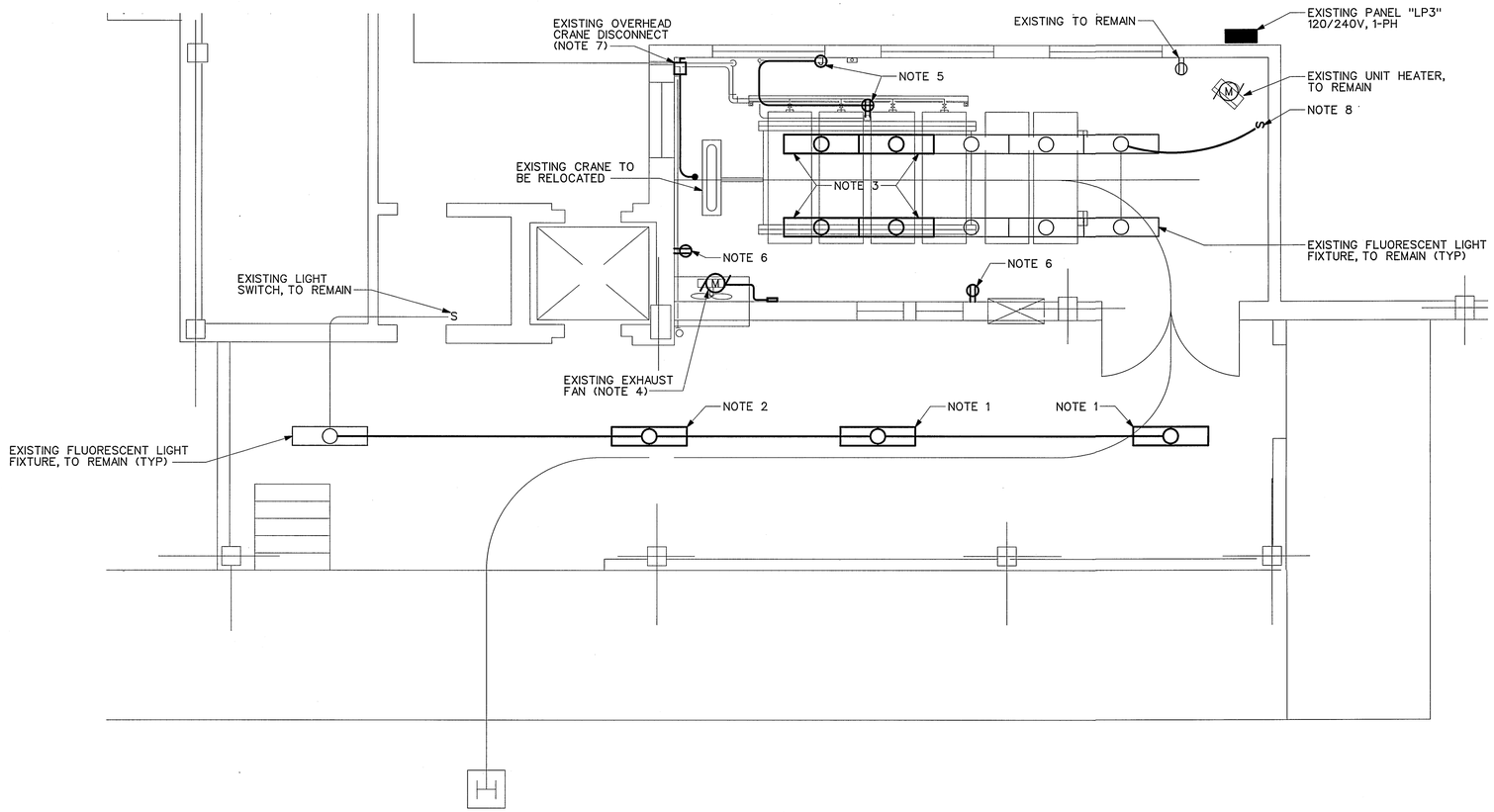

DEMOLITION PLAN - ELECTRICAL

SCALE: 1/4" = 1'-0"

NOTES:

1. REMOVE EXISTING FLUORESCENT LIGHT FIXTURES. REMOVE CONDUIT AND CONDUCTORS BACK TO EXISTING LIGHT FIXTURE TO BE RELOCATED, AS SHOWN.
2. RELOCATE EXISTING LIGHT FIXTURE TO LOCATION SHOWN ON NEW WORK DRAWINGS.
3. REMOVE EXISTING FLUORESCENT LIGHT FIXTURES. REMOVE CONDUIT AND CONDUCTORS BACK TO UPSTREAM FIXTURES, AS SHOWN.
4. EXISTING EXHAUST FAN TO BE REMOVED. REMOVE CONDUIT AND CONDUCTORS BACK TO "MCC," CKT 33. SEE "PARTIAL SECOND FLOOR PLAN" FOR LOCATION OF "MCC."
5. REMOVE EXISTING QUAD RECEPTACLE AND WALL MOUNTED JUNCTION BOX. REMOVE AND CONDUCTORS BACK TO RESPECTIVE PANELBOARD AND LABEL CIRCUIT BREAKER, AS SPARE. REMOVE EXPOSED CONDUIT.
6. REMOVE EXISTING CONDUCTORS AND CONDUIT BACK TO NEAREST DEVICE TO REMAIN IN SERVICE. RE-ROUTE CONDUCTORS AND CONDUIT TO MAINTAIN POWER TO EXISTING DEVICES TO REMAIN.
7. REMOVE EXISTING OVERHEAD CRANE DISCONNECT SWITCH. EXISTING OVERHEAD CRANE SHALL BE SHORTENED IN LENGTH, AS INDICATED ON NEW WORK DRAWINGS. EXTEND CONDUIT AND CONDUCTORS, AS NECESSARY, TO LOCATION OF NEW OVERHEAD CRANE DISCONNECT SWITCH, AS INDICATED ON NEW WORK DRAWINGS. SEE "NEW WORK PLAN - ELECTRICAL - POWER" FOR CONNECTION DETAIL.
8. REMOVE EXISTING SINGLE POLE LIGHT SWITCH. REMOVE EXPOSED CONDUIT AND CONDUCTORS TO NEAREST LIGHT FIXTURE BEING CONTROLLED BY LIGHT SWITCH. PROVIDE BLANK COVER PLATE FOR EMPTY BOX.
9. PROVIDE TEMPORARY POWER TO TEMPORARY CHEMICAL FEED PUMPS FED FROM SPARE CIRCUIT BREAKER IN PANEL "LP3," CKT 17. PROVIDE 2•12 & 1•12 EGC-3/4" C TO JUNCTION BOX ON WALL, AS SHOWN. PROVIDE 2•12 & 1•12 EGC IN 3/4" LIQUID TIGHT FLEXIBLE CONDUIT FROM JUNCTION BOX TO CHEMICAL FEED PUMP DC DRIVES. AFTER COMPLETION OF PLANT IMPROVEMENTS AND RELOCATION OF CHEMICAL FEED PUMPS, REMOVE POWER FEED BACK TO PANEL "LP3" AND RELABEL CIRCUIT BREAKER, AS SPARE.

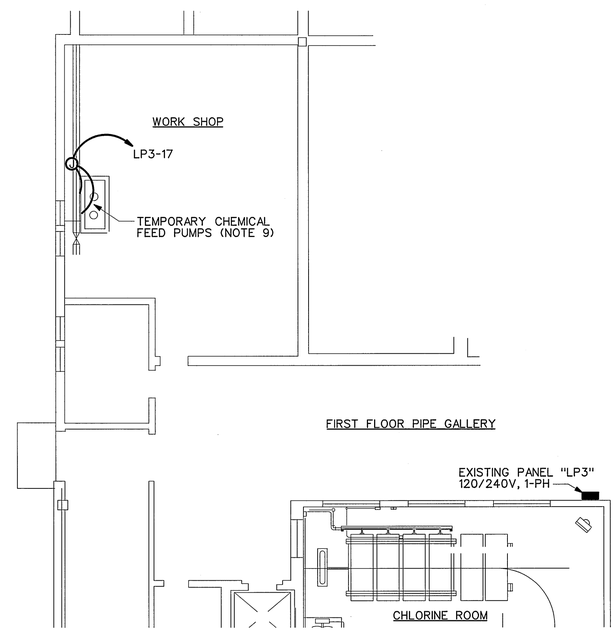

PARTIAL PLAN - TEMPORARY POWER

SCALE: 1/8" = 1'-0"

IF THIS DRAWING IS A REDUCTION, GRAPHIC SCALE MUST BE USED.

5' 0 5'

1/4" = 1'-0"

5' 0 5' 10' 15'

1/8" = 1'-0"

REV.	DATE	BY	APP.	DESCRIPTION

COMMONWEALTH OF VIRGINIA
WARREN M. CHILDRESS
No. 8025
7-12-2006
PROFESSIONAL ENGINEER

Wiley & Wilson
Employee-Owned
2310 Langhorne Road
Lynchburg, VA 24501-1547
www.wileywilson.com

BID SET

DESIGNED JWG	DRAWN JWG	PROJECT	ABERT WATER TREATMENT PLANT IMPROVEMENTS FOR THE CITY OF LYNCHBURG, VIRGINIA
CHECKED WMC	REVIEWED TLF		
COMM. NO. 206076.00	FILE NO.	REFERENCE	ELECTRICAL
CADD NO. 206076e03.dgn		TITLE	DEMOLITION PLAN
DATE 7-12-06	DWG. NO. E-3	SHEET NO. 20 OF 23	REV. 0

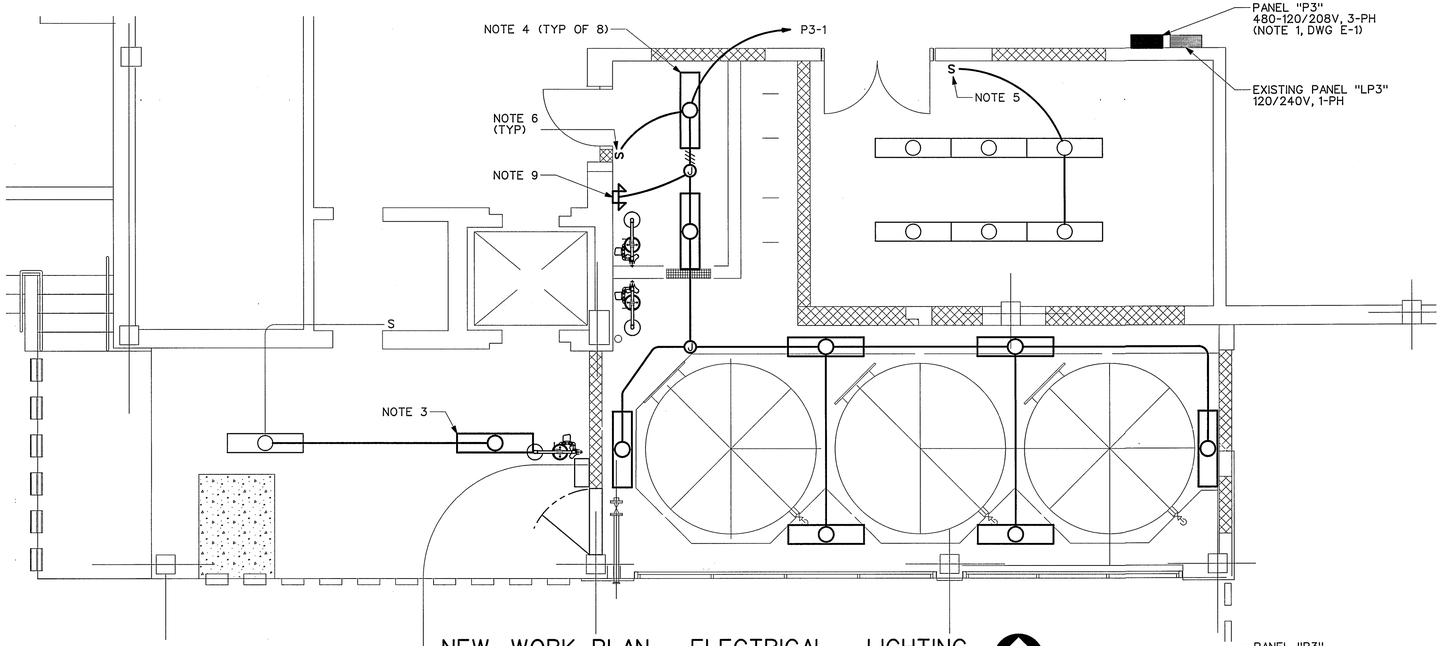

NEW WORK PLAN - ELECTRICAL - LIGHTING

SCALE: 1/4" = 1'-0"

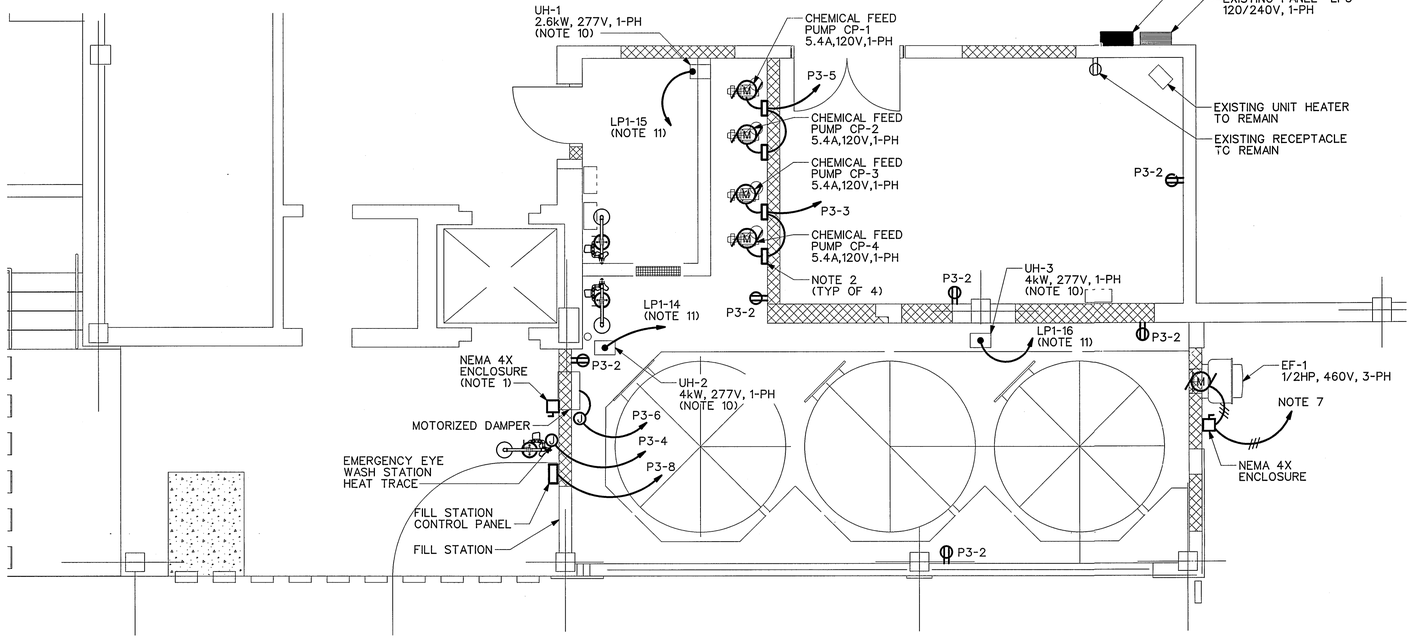

NEW WORK PLAN - ELECTRICAL - POWER

SCALE: 1/4" = 1'-0"

NOTES:

1. PROVIDE 30A, NON-FUSED DISCONNECT SWITCH, MOUNTED IN LOCATION SHOWN. PROVIDE 3•12 & 1•12 EGC - 3/4" C FROM DISCONNECT TO EXISTING OVERHEAD CRANE ELECTRICAL CONNECTION ABOVE. CONNECT EXISTING RELOCATED CONDUIT AND CONDUCTORS TO NEW DISCONNECT SWITCH, AS NECESSARY.
2. DC DRIVE TO BE PROVIDED BY SUPPLIER OF CHEMICAL FEED PUMPS. MOUNT ON WALL NEAR PUMPS.
3. EXISTING FIXTURE RELOCATED TO LOCATION SHOWN. EXTEND CONDUIT AND CONDUCTORS AS NECESSARY.
4. PROVIDE PENDANT MOUNTED LIGHT FIXTURES MOUNTED 14'-0" AFF TO BOTTOM. FIXTURE SHALL BE BY LITHONIA CATALOG NUMBER "DMW 2 32 AR 120 GEB" OR EQUAL.
5. PROVIDE SINGLE POLE LIGHT SWITCH AND CONNECT TO EXISTING LIGHT FIXTURES, AS SHOWN.
6. PROVIDE SINGLE POLE LIGHT SWITCH AND CONNECT TO NEW LIGHT FIXTURES, AS SHOWN.
7. PROVIDE 3•12 & 1•12 EGC - 3/4" C FROM EXHAUST FAN "EF-1" TO CKT 33 (NEW STARTER) IN "MCC." CONTRACTOR SHALL FIELD ROUTE CONDUIT AND CONDUCTORS, AS NECESSARY.
8. REPLACE EXISTING EXHAUST FAN "EF-5" NEMA SIZE 1 MOTOR STARTER OVERLOAD HEATERS SIZED FOR A 1/2HP MOTOR. EXISTING "MCC" WAS MANUFACTURED BY GE. CONTRACTOR SHALL ENSURE THAT MOTOR STARTER PROVIDED IS COMPATIBLE WITH EXISTING MOTOR CONTROL CENTER.
9. PROVIDE AN EMERGENCY BATTERY LIGHT, LITHONIA CATALOG NUMBER "ELT 16 H 120" OR EQUAL. MOUNT 7'-6" AFF TO BOTTOM OF FIXTURE.
10. UNIT HEATERS SHALL HAVE A BUILT-IN DISCONNECT SWITCH PROVIDED BY MANUFACTURER.
11. CIRCUIT NUMBERS ARE TO EXISTING SPARE BREAKERS IN PANEL "LP1" LOCATED ON SECOND FLOOR. CONTRACTOR SHALL VERIFY POLES USED IN PANELS CONTAIN SPARE BREAKERS. IF THE POLES ARE USED FOR OTHER LOADS LOCATE ANOTHER SPARE BREAKER IN PANEL "LP1." CIRCUIT BREAKER SHALL BE COMPATIBLE WITH PANEL. PANEL WAS MANUFACTURED BY GE.

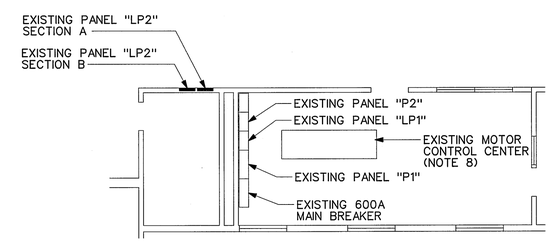

PARTIAL SECOND FLOOR PLAN

SCALE: 1/8" = 1'-0"

IF THIS DRAWING IS A REDUCTION, GRAPHIC SCALE MUST BE USED.

5' 0 5'
1/4" = 1'-0"

5' 0 5' 10' 15'
1/8" = 1'-0"

REV.	DATE	BY	APP.	DESCRIPTION

COMMONWEALTH OF VIRGINIA
WARREN M. CHILDRESS
No. 8025
7-12-2006
PROFESSIONAL ENGINEER

Wiley & Wilson
Employee-Owned
2310 Langhorne Road
Lynchburg, VA 24501-1547
www.wileywilson.com

BID SET

DESIGNED JWG	DRAWN JWG	PROJECT	ABERT WATER TREATMENT PLANT IMPROVEMENTS FOR THE CITY OF LYNCHBURG, VIRGINIA
CHECKED WMC	REVIEWED TLF		
COMM. NO. 206076.00	FILE NO.	REFERENCE	ELECTRICAL
CADD NO. 206076e04.dgn		TITLE	NEW WORK PLAN - ELECTRICAL - LIGHTING & POWER
DATE 7-12-06		DWG. NO. E-4	SHEET NO. 21 OF 23 / REV. 0

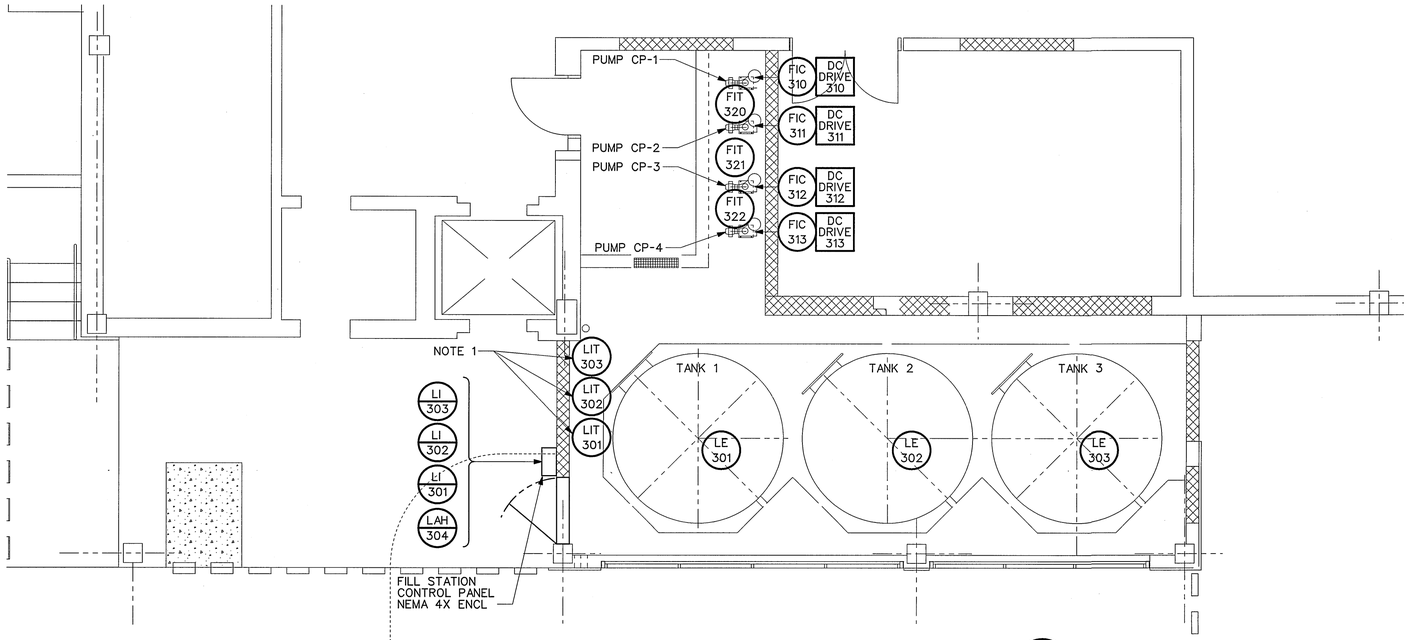

NEW WORK PLAN - INSTRUMENTATION

SCALE: 1/4" = 1'-0"

N

NOTES:

1. MOUNT LEVEL TRANSMITTERS ON WALL AT 5'-0" AFF TO BOTTOM. LABEL EACH DISPLAY WITH THE APPROPRIATE TANK.

IF THIS DRAWING IS A REDUCTION, GRAPHIC SCALE MUST BE USED.

5' 0 5'

1/4" = 1'-0"

REV.	DATE	BY	APP.	DESCRIPTION

COMMONWEALTH OF VIRGINIA
WARREN M. CHILDRESS
No. 8025
7-12-2006
PROFESSIONAL ENGINEER

Wiley & Wilson
Employee-Owned
2310 Langhorne Road
Lynchburg, VA 24501-1547
www.wileywilson.com

BID SET

DESIGNED JWG	DRAWN JWG	PROJECT	ABERT WATER TREATMENT PLANT IMPROVEMENTS FOR THE CITY OF LYNCHBURG, VIRGINIA
CHECKED WMC	REVIEWED TLF		
COMM. NO. 206076.00	FILE NO.	REFERENCE	ELECTRICAL
CADD NO. 206076e05.dgn		TITLE	NEW WORK PLAN - INSTRUMENTATION
DATE 7-12-06		DWG. NO. E-5	SHEET NO. 22 OF 23 / REV. 0

EXISTING PANEL "LP1" SCHEDULE

480/277 VOLTS, 3 PHASE, 4 WIRES, SOLID NEUTRAL, GROUND BAR:
MAIN LUGS ONLY, 225 AMP BUS
PANELBOARD MINIMUM SHORT CIRCUIT RATING 10,000 SYM RMS AMPS

CKT No.	POLE No.	DESCRIPTION	CONN kVA	CONN AMPS A	CONN AMPS B	CONN AMPS C	BREAKER P	BREAKER AF	BREAKER AT	NUMBER & WIRE SIZE PHASE	NUMBER & WIRE SIZE NEUT	NUMBER & WIRE SIZE EGC	CONDUIT SIZE
1	1	EXISTING LOAD	EXIST	EXIST	—	—	1	100	20	EXIST	EXIST	EXIST	EXIST
3	3	EXISTING LOAD	EXIST	—	EXIST	—	1	100	20	EXIST	EXIST	EXIST	EXIST
5	5	EXISTING LOAD	EXIST	—	—	EXIST	1	100	20	EXIST	EXIST	EXIST	EXIST
7	7	EXISTING LOAD	EXIST	EXIST	—	—	1	100	20	EXIST	EXIST	EXIST	EXIST
9	9	EXISTING LOAD	EXIST	—	EXIST	—	1	100	30	EXIST	EXIST	EXIST	EXIST
11	11	EXISTING LOAD	EXIST	—	—	EXIST	1	100	30	EXIST	EXIST	EXIST	EXIST
13	13	EXISTING LOAD	EXIST	EXIST	—	—	1	100	30	EXIST	EXIST	EXIST	EXIST
* 15	15	**UH-1**	**2.6**	—	**9.3**	—	1	100	30	**10**	**10**	**10**	**3/4"**
17	17	EXISTING LOAD	EXIST	—	—	EXIST	1	100	20	EXIST	EXIST	EXIST	EXIST
19	19	EXISTING LOAD	EXIST	EXIST	—	—	1	100	20	EXIST	EXIST	EXIST	EXIST
21	21	EXISTING LOAD	EXIST	—	EXIST	—	1	100	20	EXIST	EXIST	EXIST	EXIST
23	23	EXISTING LOAD	EXIST	—	—	EXIST	1	100	20	EXIST	EXIST	EXIST	EXIST
25	25	EXISTING LOAD	EXIST	EXIST	—	—	1	100	20	EXIST	EXIST	EXIST	EXIST
27	27	EXISTING LOAD	EXIST	—	EXIST	—	1	100	20	EXIST	EXIST	EXIST	EXIST
29	29	EXISTING LOAD	EXIST	—	—	EXIST	1	100	20	EXIST	EXIST	EXIST	EXIST
31	31	EXISTING LOAD	EXIST	EXIST	—	—	1	100	20	EXIST	EXIST	EXIST	EXIST
33	33	EXISTING LOAD	EXIST	—	EXIST	—	1	100	20	EXIST	EXIST	EXIST	EXIST
35	35	EXISTING LOAD	EXIST	—	—	EXIST	1	100	20	EXIST	EXIST	EXIST	EXIST
37	37	EXISTING LOAD	EXIST	EXIST	—	—	1	100	20	EXIST	EXIST	EXIST	EXIST
39	39	SPARE	-	—	-	—	1	100	20	-	-	-	-
41	41	SPARE	-	—	—	-	1	100	20	-	-	-	-
2	2	EXISTING LOAD	EXIST	EXIST	—	—	1	100	20	EXIST	EXIST	EXIST	EXIST
4	4	EXISTING LOAD	EXIST	—	EXIST	—	1	100	20	EXIST	EXIST	EXIST	EXIST
6	6	EXISTING LOAD	EXIST	—	—	EXIST	1	100	20	EXIST	EXIST	EXIST	EXIST
8	8	EXISTING LOAD	EXIST	EXIST	—	—	1	100	30	EXIST	EXIST	EXIST	EXIST
10	10	EXISTING LOAD	EXIST	—	EXIST	—	1	100	30	EXIST	EXIST	EXIST	EXIST
12	12	EXISTING LOAD	EXIST	—	—	EXIST	1	100	30	EXIST	EXIST	EXIST	EXIST
* 14	14	**UH-2**	**4.0**	**14.4**	—	—	1	100	30	**10**	**10**	**10**	**3/4"**
* 16	16	**UH-3**	**4.0**	—	**14.4**	—	1	100	30	**10**	**10**	**10**	**3/4"**
18	18	EXISTING LOAD	EXIST	—	—	EXIST	1	100	20	EXIST	EXIST	EXIST	EXIST
20	20	EXISTING LOAD	EXIST	EXIST	—	—	1	100	20	EXIST	EXIST	EXIST	EXIST
22	22	EXISTING LOAD	EXIST	—	EXIST	—	1	100	20	EXIST	EXIST	EXIST	EXIST
24	24	EXISTING LOAD	EXIST	—	—	EXIST	1	100	20	EXIST	EXIST	EXIST	EXIST
26	26	EXISTING LOAD	EXIST	EXIST	—	—	1	100	20	EXIST	EXIST	EXIST	EXIST
28	28	EXISTING LOAD	EXIST	—	EXIST	—	1	100	20	EXIST	EXIST	EXIST	EXIST
30	30	EXISTING LOAD	EXIST	—	—	EXIST	1	100	20	EXIST	EXIST	EXIST	EXIST
32	32	EXISTING LOAD	EXIST	EXIST	—	—	1	100	20	EXIST	EXIST	EXIST	EXIST
34	34	EXISTING LOAD	EXIST	—	EXIST	—	1	100	20	EXIST	EXIST	EXIST	EXIST
36	36	EXISTING LOAD	EXIST	—	—	EXIST	1	100	20	EXIST	EXIST	EXIST	EXIST
38	38	EXISTING LOAD	EXIST	EXIST	—	—	1	100	30	EXIST	EXIST	EXIST	EXIST
40	40	SPARE	-	—	-	—	1	100	20	-	-	-	-
42	42	SPARE	-	—	—	-	1	100	20	-	-	-	-

* EXISTING CIRCUIT BREAKERS TO BE USED

PANEL "P3" SCHEDULE

FOR PANEL INFORMATION
SEE NOTE 1 ON DWG E-1
(10,000 AIC)

CKT No.	POLE No.	DESCRIPTION	CONN kVA	CONN AMPS A	CONN AMPS B	CONN AMPS C	BREAKER P	BREAKER AF	BREAKER AT	NUMBER & WIRE SIZE PHASE	NUMBER & WIRE SIZE NEUT	NUMBER & WIRE SIZE EGC	CONDUIT SIZE
1	1	LTS - CHEM FEED RM	0.5	4.6	—	—	1	100	20	12	12	12	3/4"
3	3	CP-3, CP-4	1.2	—	10.8	—	1	100	20	12	12	12	3/4"
5	5	CP-1, CP-2	1.2	—	—	10.8	1	100	20	12	12	12	3/4"
9	7	HEAT TRACING	3.6	10.0	—	—	3	100	20	12	12	12	3/4"
	9			—	10.0	—							
	11			—	—	10.0							
13	13	FLOW METERS	0.2	1.3	—	—	1	100	20	12	12	12	3/4"
15	15	SPARE	-	—	-	—	1	100	20	-	-	-	-
17	17	SPARE	-	—	—	-	1	100	20	-	-	-	-
-	19	SPACE	-	-	—	—	1	100	-	-	-	-	-
-	21	SPACE	-	—	-	—	1	100	-	-	-	-	-
-	23	SPACE	-	—	—	-	1	100	-	-	-	-	-
2	2	RECEPTS - CHEM RM & STORAGE	1.0	9.0	—	—	1	100	20	12	12	12	3/4"
4	4	EYE WASH HEAT TRACE	0.7	—	6.0	—	1	100	20	12	12	12	3/4"
6	6	MOTORIZED DAMPER	0.6	—	—	5.0	1	100	20	12	12	12	3/4"
8	8	FILL STATION CONTROL PANEL	0.5	4.0	—	—	1	100	20	12	12	12	3/4"
10	10	SPARE	-	—	-	—	1	100	20	-	-	-	-
12	12	SPARE	-	—	—	-	1	100	20	-	-	-	-
-	14	SPACE	-	-	—	—	1	100	-	-	-	-	-
-	16	SPACE	-	—	-	—	1	100	-	-	-	-	-
-	18	SPACE	-	—	—	-	1	100	-	-	-	-	-
-	20	SPACE	-	-	—	—	1	100	-	-	-	-	-
-	22	SPACE	-	—	-	—	1	100	-	-	-	-	-
-	24	SPACE	-	—	—	-	1	100	-	-	-	-	-

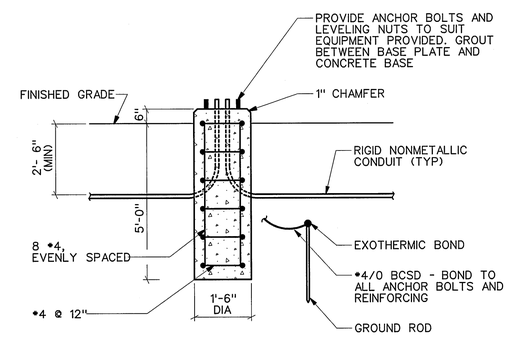

DETAIL - POLE BASE

NOT TO SCALE

REV.	DATE	BY	APP.	DESCRIPTION

COMMONWEALTH OF VIRGINIA
WARREN M. CHILDRESS
No. 8025
7-12-2006
PROFESSIONAL ENGINEER

Wiley & Wilson
Employee-Owned
2310 Langhorne Road
Lynchburg, VA 24501-1547
www.wileywilson.com

BID SET

DESIGNED JWG	DRAWN JWG	PROJECT	ABERT WATER TREATMENT PLANT IMPROVEMENTS FOR THE CITY OF LYNCHBURG, VIRGINIA
CHECKED WMC	REVIEWED TLF		
COMM. NO. 206076.00	FILE NO.	REFERENCE	ELECTRICAL
CADD NO. 206076e06.dgn		TITLE	PANEL SCHEDULES
DATE 7-12-06		DWG. NO. E-6	SHEET NO. 23 OF 23 / REV. 0