## ISOMETRIC

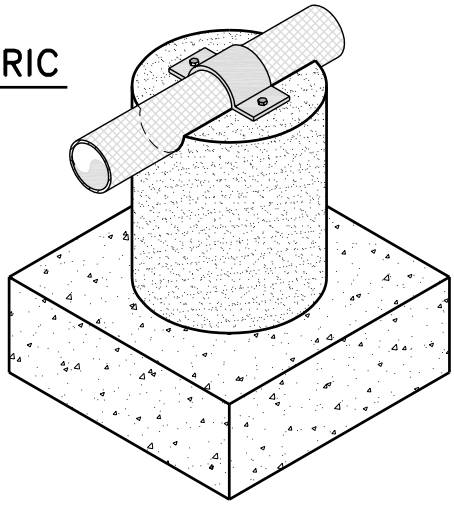

| PIPE SUPPORT PIER FOR DRY LAND CROSSING | | | | | | | | |
|---|---|---|---|---|---|---|---|---|
| PIPE DIAMETER | STEM DIAMETER "D" | STEM HEIGHT "H" | STEM REINF. BARS "A" | FOOTING SIZE | | STEM CONC. VOL. / VERT. FT. CU. YARDS | STEM STEEL WT./ VERT. FT. POUNDS | FOOTING CONC. VOL. CU. YARDS |
| | | | | "W" | "T" | | | |
| 8" TO 10" | 2'–6" | 1'–3' | 10#4 | 4'–0" | 1'–6" | 0.18 | 6.68 | 0.89 |
| | | 4'–6' | 10#5 | 5'–0" | 2'–0" | | 10.43 | 1.85 |
| | | 7'–9' | 10#5 | 6'–0" | 2'–0" | | 10.43 | 2.67 |
| | | 10'–12' | 10#6 | 7'–0" | 2'–6" | | 15.02 | 4.54 |
| 12" TO 16" | 3'–0" | 1'–3' | 10#4 | 5'–0" | 1'–6" | 0.26 | 6.68 | 1.39 |
| | | 4'–6' | 10#5 | 6'–0" | 2'–0" | | 10.43 | 2.67 |
| | | 7'–9' | 10#6 | 7'–0" | 2'–6" | | 15.02 | 4.54 |
| | | 10'–12' | 10#8 | 8'–0" | 2'–6" | | 26.70 | 5.92 |
| 18" TO 24" | 3'–6" | 1'–3' | 14#5 | 6'–0" | 2'–0" | 0.36 | 14.60 | 2.67 |
| | | 4'–6' | 14#6 | 7'–0" | 2'–6" | | 21.03 | 4.54 |
| | | 7'–9' | 14#6 | 8'–0" | 3'–0" | | 21.03 | 7.11 |
| | | 10'–12' | 14#8 | 9'–0" | 3'–0" | | 37.38 | 9.00 |

## NOTES:

1. MINIMUM SOIL BEARING CAPACITY REQUIRED = 3,000 PSF. ENGINEER SHALL INSPECT ALL FOOTINGS PRIOR TO PLACEMENT OF CONCRETE.
2. CONCRETE – 3,000 PSI @ 28 DAYS.
3. REINFORCING – ASTM A615, GRADE 60.

THE CITY OF LYNCHBURG

PIPE SUPPORT PIER FOR DRY LAND CROSSING

USE WITH THE CITY OF LYNCHBURG STANDARD SPECIFICATIONS ONLY

SCALE: NOT TO SCALE

DETAIL # 27.17

REVISION DATE: 11–16–2005

SHEET #: 2 OF 2