## FRAME

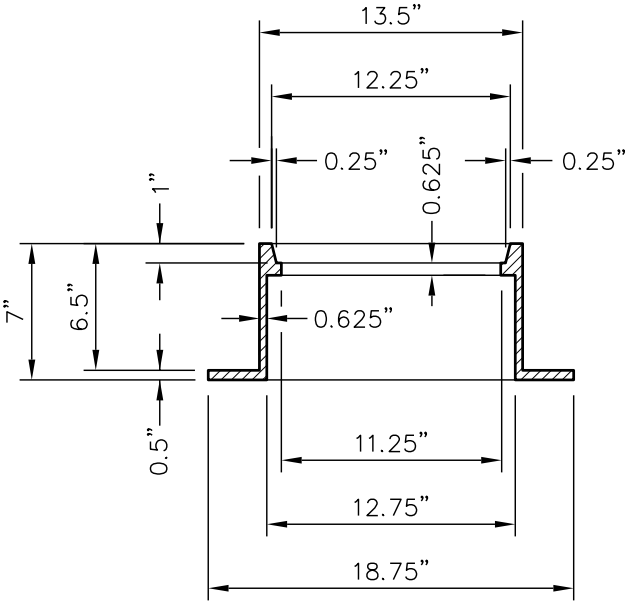


## SECTION A-A

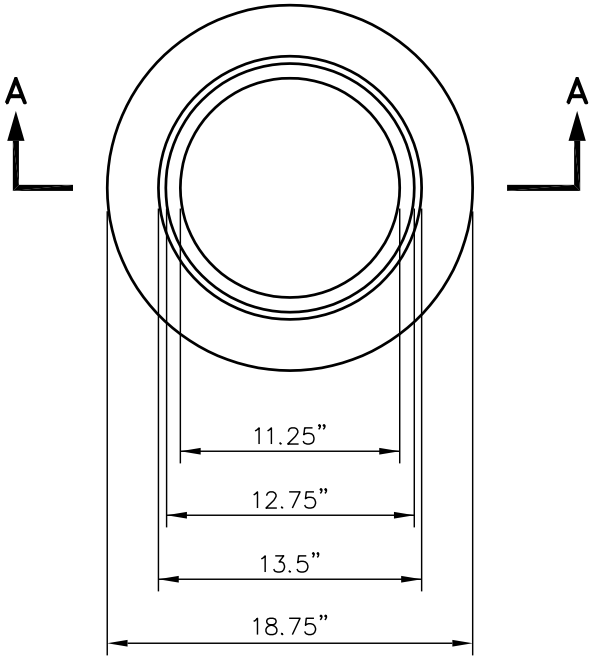


## PLAN VIEW

## COVER

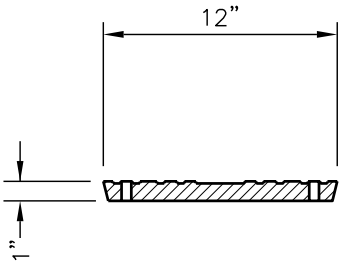


## SECTION B-B

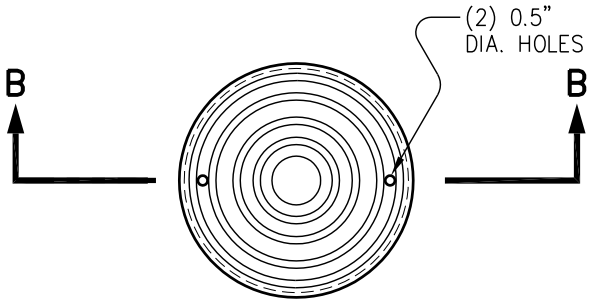


## PLAN VIEW

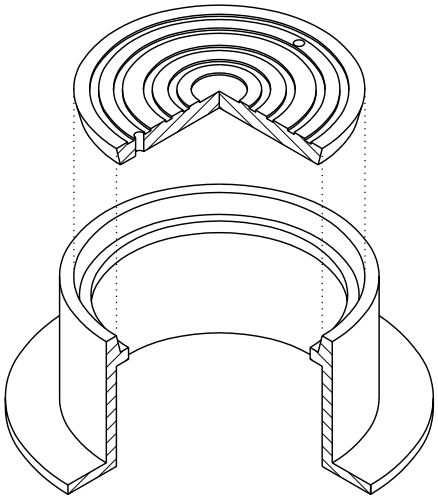

## ISOMETRIC VIEW

# THE CITY OF LYNCHBURG

LAMPSTACK
FRAME and COVER

USE WITH THE CITY OF LYNCHBURG STANDARD SPECIFICATIONS ONLY

| SCALE: | DETAIL # |
|---|---|
| NOT TO SCALE | 27.09 |
| REVISION DATE: | SHEET #: |
| 11-06-2006 | 1 OF 1 |