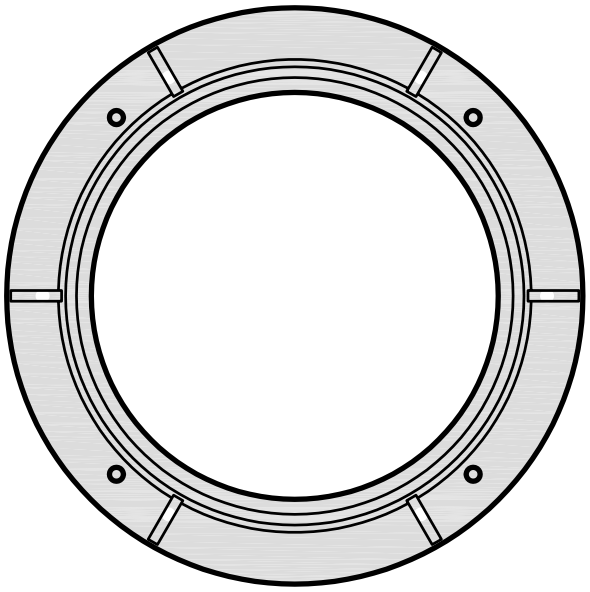

FRAME TOP VIEW

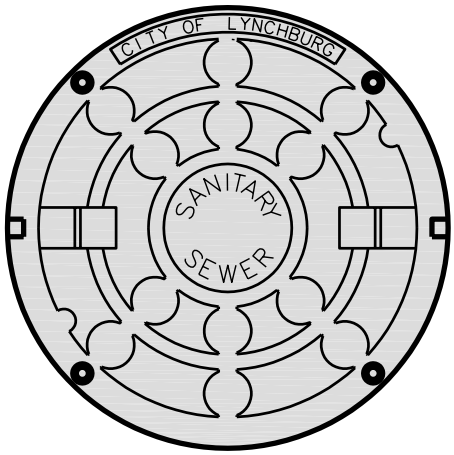

COVER FACE

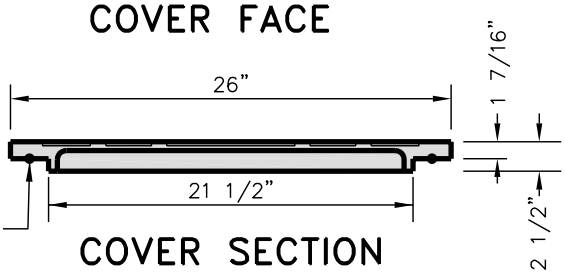

COVER SECTION

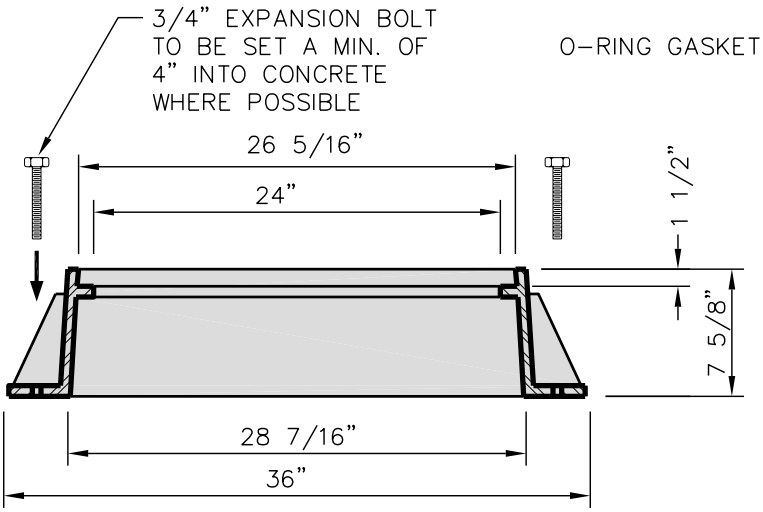

FRAME SECTION

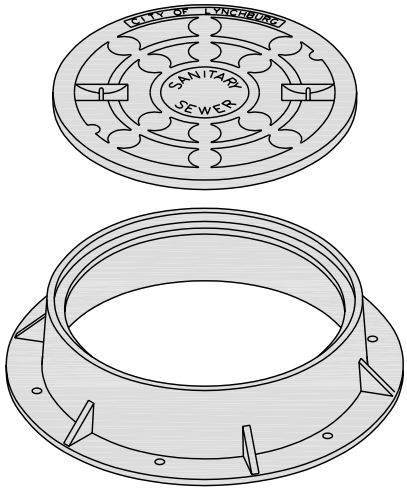

ISOMETRIC

NOTES:

1. MANHOLE FRAMES AND COVERS SHALL BE ROADWAY TYPE WITH DEEP SOCKET COVERS. MACHINE FRAMES AND COVERS TO PREVENT RATTLING. CASTINGS SHALL BE GRAY IRON MEETING REQUIREMENTS OF ASTM A48, CLASS 30.

THE CITY OF LYNCHBURG			
WATERPROOF MANHOLE FRAME and COVER		SCALE: NOT TO SCALE	DETAIL # 27.11
		REVISION DATE: 11-06-2006	SHEET #: 1 OF 1
USE WITH THE CITY OF LYNCHBURG STANDARD SPECIFICATIONS ONLY			