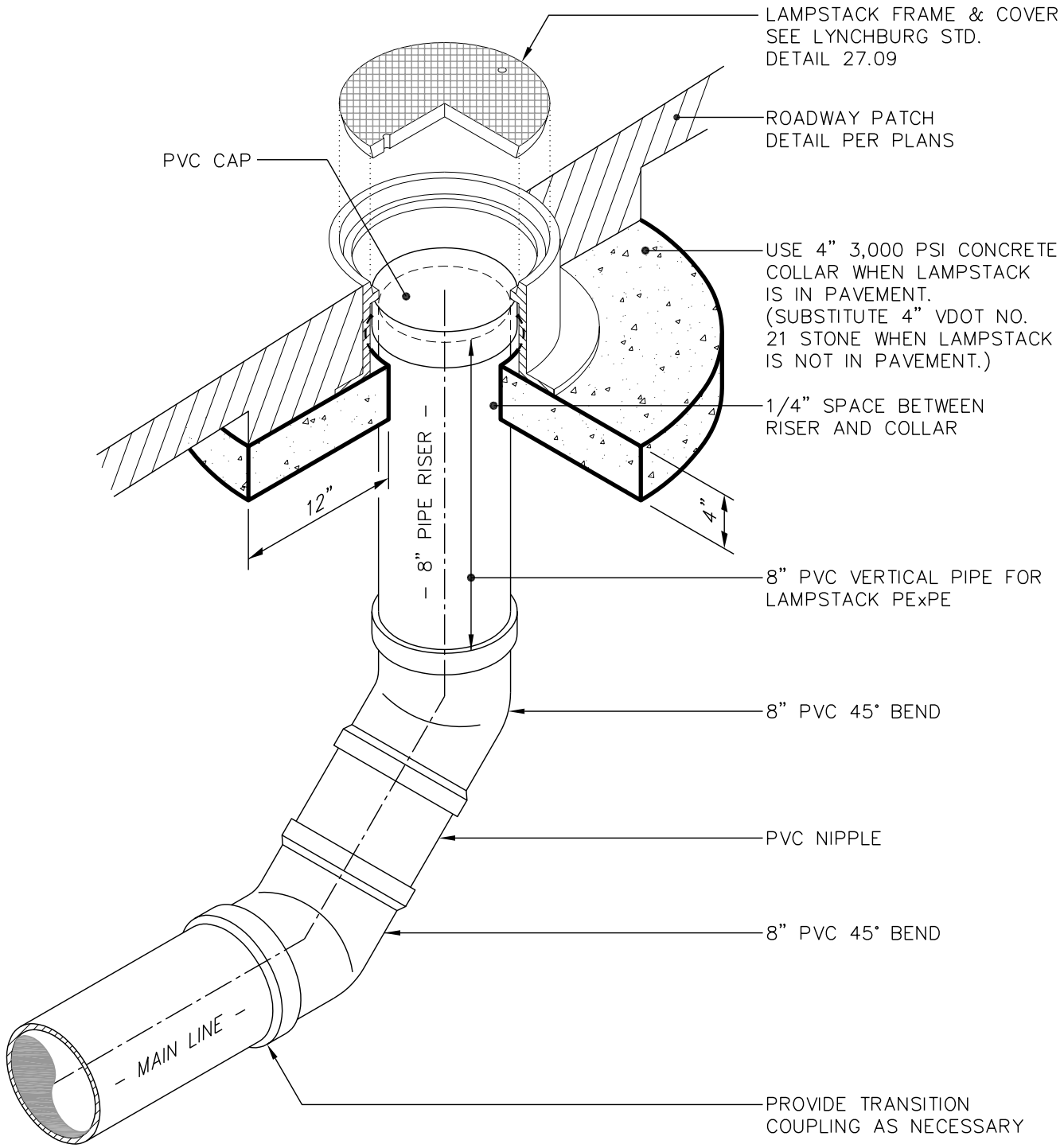

THE CITY OF LYNCHBURG

STANDARD LAMPSTACK

USE WITH THE CITY OF LYNCHBURG STANDARD SPECIFICATIONS ONLY

SCALE:	DETAIL #
NOT TO SCALE	27.13
REVISION DATE:	SHEET #:
11-06-2006	1 OF 1