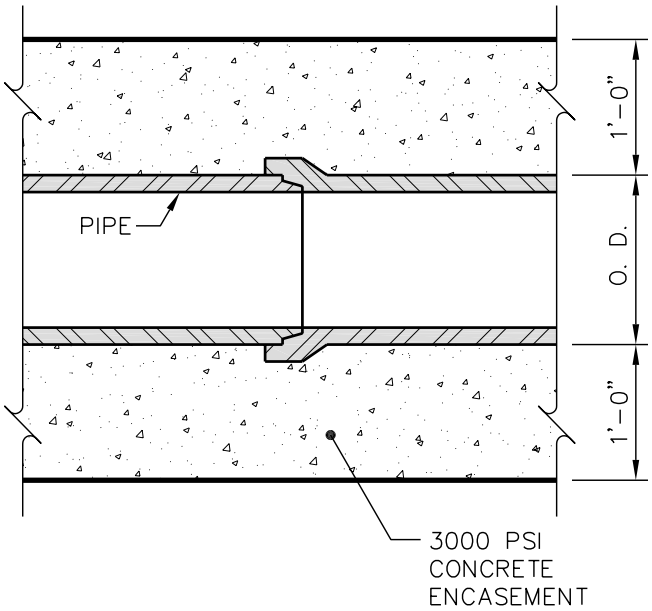

LONGITUDINAL SECTION

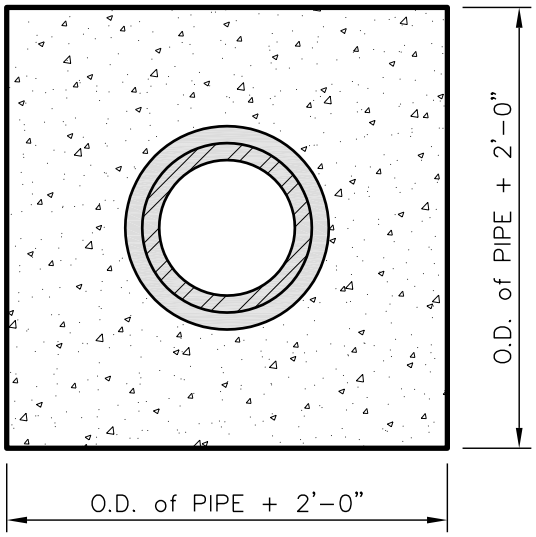

TRANSVERSE SECTION

NOTES:

1. ENCASEMENT TO BE USED ONLY WHERE SPECIFIED ON PLANS.

THE CITY OF LYNCHBURG

SEWER LINE CROSSING
BENEATH STREAM BED

USE WITH THE CITY OF LYNCHBURG STANDARD SPECIFICATIONS ONLY

SCALE:	DETAIL #
NOT TO SCALE	27.19
REVISION DATE:	SHEET #:
11-06-2006	2 OF 2