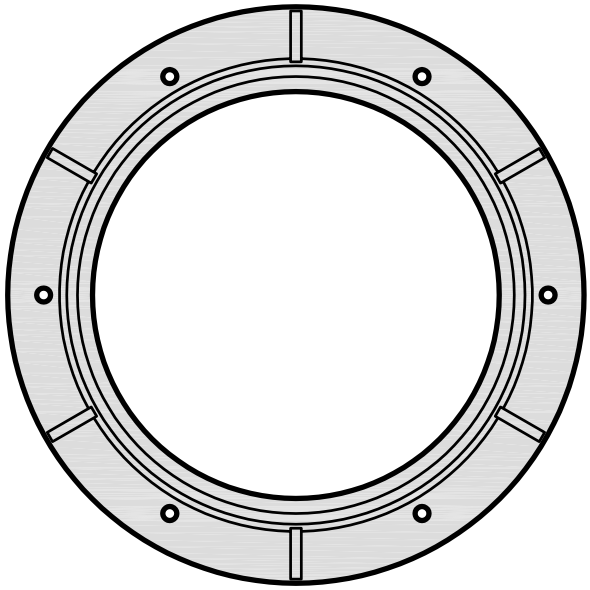

FRAME TOP VIEW

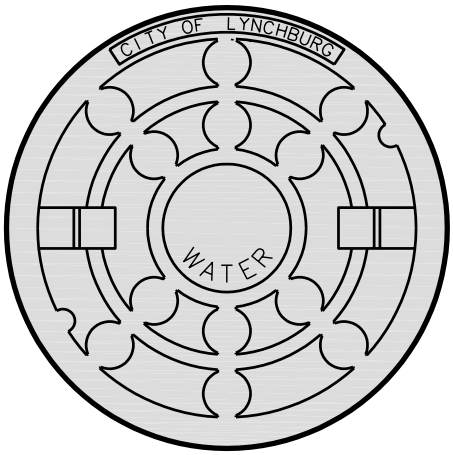

COVER FACE

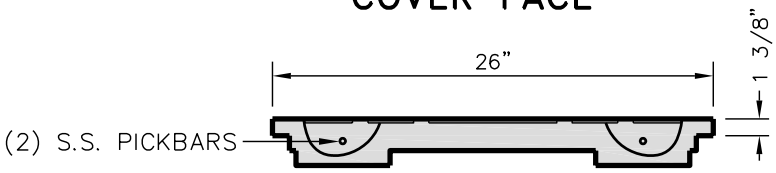

COVER SECTION

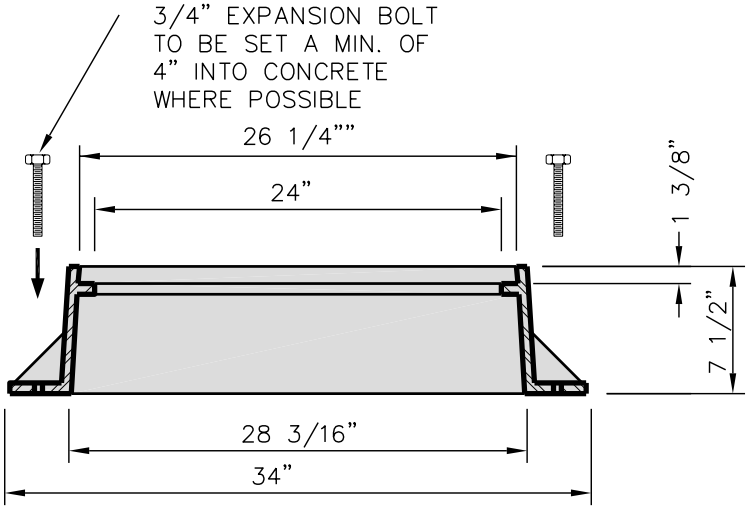

FRAME SECTION

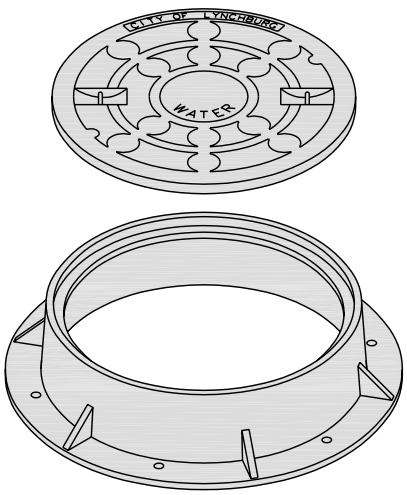

ISOMETRIC

NOTES:

1. PARTS #'s: US FOUNDRY 710 RING AND DP COVER, EAST JORDAN IRON WORKS OR APPROVED EQUAL.
2. MANHOLE FRAMES AND COVERS SHALL BE ROADWAY TYPE WITH DEEP SOCKET COVERS. MACHINE FRAMES AND COVERS TO PREVENT RATTLING. CASTINGS SHALL BE GRAY IRON MEETING REQUIREMENTS OF ASTM A48, CLASS 30.

THE CITY OF LYNCHBURG

STANDARD MANHOLE FRAME and COVER

USE WITH THE CITY OF LYNCHBURG STANDARD SPECIFICATIONS ONLY

SCALE:	DETAIL #
NOT TO SCALE	26.23
REVISION DATE:	SHEET #:
11-06-2006	1 OF 1